9-12-80
Vol. 45—No. 179
BOOK 1:
Pages
60399-60652

BOOK 2:
Pages
60653-60876

federal register

Book 1 of 2 Books
Friday, September 12, 1980

Highlights

60399 **Veterans Day** Presidential Proclamation

60431 **Grant Programs—Health** HHS/PHS sets forth requirements for grants for training programs in emergency medical services; effective 10-30-80

60754 **Prescription Drugs** HHS/FDA issues draft guidelines and establishes requirements for patient package inserts; rules effective 10-14-80; comments on guidelines by 10-27-80 (2 documents) (Part V of this issue)

60576 **Medical Devices** HHS/FDA issues regulations for classifications of hematology and pathology devices (Part II of this issue) (106 documents)

60425 **Housing** HUD/FHC publishes regulations regarding condominium ownership mortgage insurance involving existing single family units; effective 10-2-80

60836 **Housing** HUD/FHC revises requirements for development of low-income public housing by simplifying and streamlining current processing procedures; effective 10-1-80 (Part VIII of this issue)

60418 **Gasoline** DOE/FERC publishes order granting stay on transportation certificates for natural gas for the displacement of fuel oil; effective 8-29-80

CONTINUED INSIDE

FEDERAL REGISTER Published daily, Monday through Friday, (not published on Saturdays, Sundays, or on official holidays), by the Office of the Federal Register, National Archives and Records Service, General Services Administration, Washington, D.C. 20408, under the Federal Register Act (49 Stat. 500, as amended; 44 U.S.C. Ch. 15) and the regulations of the Administrative Committee of the Federal Register (1 CFR Ch. I). Distribution is made only by the Superintendent of Documents, U.S. Government Printing Office, Washington, D.C. 20402.

The Federal Register provides a uniform system for making available to the public regulations and legal notices issued by Federal agencies. These include Presidential proclamations and Executive Orders and Federal agency documents having general applicability and legal effect, documents required to be published by Act of Congress and other Federal agency documents of public interest. Documents are on file for public inspection in the Office of the Federal Register the day before they are published, unless earlier filing is requested by the issuing agency.

The Federal Register will be furnished by mail to subscribers, free of postage, for $75.00 per year, or $45.00 for six months, payable in advance. The charge for individual copies is $1.00 for each issue, or $1.00 for each group of pages as actually bound. Remit check or money order, made payable to the Superintendent of Documents, U.S. Government Printing Office, Washington, D.C. 20402.

There are no restrictions on the republication of material appearing in the Federal Register.

Questions and requests for specific information may be directed to the telephone numbers listed under INFORMATION AND ASSISTANCE in the READER AIDS section of this issue.

Highlights

60450 **Alien** Treasury/IRS publishes proposal regarding election by nonresident alien individual to be treated as resident and income tax treaties; comments by 11-11-80

60503 **Grant Programs** IDCA/AID has authorized guaranty of a loan to finance a project for low-cost housing and home improvements in El Salvador

60832 **Equal Employment Opportunity** EEOC publishes notice regarding layoffs and equal employment opportunities (part VII of this issue)

60451 **Improving Government Regulations** Justice/PARCOM publishes semiannual agenda of regulations

60427 **Prisoners** Justice/PARCOM adopts interim rule on criteria for termination of parole supervision; effective 9-12-80; comments by 11-14-80

60460 **Environmental Protection** USDA/FSQS proposes guidelines on implementation of the National Environmental Policy Act; comments by 11-12-80

60453 **Mail** PS publishes proposal regarding alternate methods of paying postage on privately shipped letters; comments by 10-14-80

60452 **Mail** PS publishes proposal regarding identification of special rate bulk third class mailers; comments by 10-14-80

60465 **Import** CITA announces import restraint levels for certain cotton and man-made fiber textile products under new bilateral agreement with Sri Lanka; effective 5-1-80

60448 **Livestock** USDA/FSQS gives notice of solicitation of information regarding humane handling and treatment of livestock; comments by 11-12-80

60438 **Tariff** ICC publishes regulations regarding tariff improvement

60536 **Sunshine Act Meetings**

Separate Parts of This Issue

60576 **Part II, HHS/FDA**
60656 **Part III, Labor/OSHA**
60730 **Part IV, Labor/ESA**
60754 **Part V, HHS/FDA**
60820 **Part VI, HUD/FHC**
60832 **Part VII, EEOC**
60836 **Part VIII, HUD/FHC**
60848 **Part IX, USDA/FGIS**
60850 **Part X, Commerce/BEA**

Contents

Federal Register
Vol. 45, No. 179
Friday, September 12, 1980

The President
PROCLAMATIONS
60399 Veterans Day (Proc. 4791)

Executive Agencies

Agency for International Development
NOTICES
Housing guaranty programs:
60503 El Salvador

Agricultural Marketing Service
RULES
60403 Lemons grown in Ariz. and Calif. (2 documents)
Milk marketing orders:
60406 Southern Michigan
60404 Potatoes (Irish) grown in Calif. and Oreg.
PROPOSED RULES
60447 Almonds grown in Calif.
60446 Potatoes (Irish) grown in Colo.

Agricultural Stabilization and Conservation Service
NOTICES
Feed grain donations:
60460 Cheyenne River Indian Tribe, S. Dak.

Agriculture Department
See Agricultural Marketing Service; Agricultural Stabilization and Conservation Service; Animal and Plant Health Inspection Service; Commodity Credit Corporation; Federal Grain Inspection Service; Food Safety and Quality Service; Rural Electrification Administration; Soil Conservation Service.

Air Force Department
RULES
60430 Contractor responsibility; CFR Part removed

Animal and Plant Health Inspection Service
RULES
Plant pest regulations:
60402 Mediterranean fruit fly

Blind and Other Severely Handicapped, Committee for Purchase From
NOTICES
60466 Procurement list, 1980; additions and deletions
60467 Procurement list, 1980; additions and deletions; corrections (2 documents)

Civil Aeronautics Board
RULES
60408 Passenger route authority applicants, commuter carriers serving an eligible point, and carriers providing essential service; fitness determinations; data submission requirements; GAO approval

Civil Rights Commission
NOTICES
60536 Meetings; Sunshine Act

Commerce Department
See Economic Analysis Bureau; National Oceanic and Atmospheric Administration.

Commodity Credit Corporation
RULES
Loan and purchase programs:
60407 Grain
NOTICES
60536 Meetings; Sunshine Act

Commodity Futures Trading Commission
NOTICES
60467 Senior Executive Service Performance Review Board; membership

Consumer Product Safety Commission
NOTICES
Meetings:
60467 Toxicological Advisory Board

Defense Department
See Air Force Department; Engineers Crops; Navy Department.

Depository Institutions Deregulation Committee
NOTICES
60536 Meetings; Sunshine Act

Economic Analysis Bureau
PROPOSED RULES
Direct investment surveys:
60850 Foreign direct investment; reporting requirements, mandatory; content of BE-12; inquiry and meeting

Economic Regulatory Administration
NOTICES
Consent orders:
60470 Warren Holding Co.
Natural gas; fuel oil displacement certification applications:
60474 System Fuels, Inc.
Powerplant and industrial fuel use; prohibition orders, exemption requests, etc.:
60468 BASF Wyandotte Corp.
60469 Hoffman-LaRoche, Inc.
60472 Massachusetts Municipal Wholesale Electric Co.
60471 Soyland Power Cooperative, Inc.

Employment Standards Administration
NOTICES
60730 Minimum wages for Federal and federally-assisted construction; general wage determination decisions, modifications, and supersedeas decisions (Ala., Calif., Conn., Ill., Mass., Mich., Miss., Pa., Vt. & Wisc.)

Energy Department
See Economic Regulatory Administration; Federal Energy Regulatory Commission.

Engineers Corps
RULES
Navigation regulations:
60430 Cape Cod Canal, Mass.; correction

Environmental Protection Agency
RULES
Pesticide chemicals in or on raw agricultural commodities; tolerances and exemptions, etc.:
60430 Nitrapyrin
NOTICES
Environmental statements; availability, etc.:
60476 Agency statements; review and comment
60486 Agency statements; weekly receipts
Pesticide registration, cancellation, etc.:
60483 Silvex
Pesticides; emergency exemption applications:
60480 Bayleton
60481 Chlordane
60482 Sodium cyanide in M-44 device

Equal Employment Opportunity Commission
NOTICES
60832 Layoffs, impact on minorities, women and older workers; alternative approaches; inquiry
60536, 60537 Meetings; Sunshine Act (2 documents)

Federal Communications Commission
RULES
Radio services, special:
60438 Maritime services; radio equipment required on compulsorily fitted vessels; correction
NOTICES
60537 Meetings; Sunshine Act

Federal Emergency Management Agency
RULES
Flood elevation determinations:
60437 New Jersey
PROPOSED RULES
Flood elevation determinations:
60453 Illinois
NOTICES
Disaster and emergency areas:
60488 Texas
60489 West Virginia

Federal Energy Regulatory Commission
RULES
Natural Gas Policy Act of 1978:
60418 Transportation certificates for natural gas for fuel oil displacement; partial stay
NOTICES
60537 Meetings; Sunshine Act
Natural gas companies:
60474 Certificates of public convenience and necessity; applications, abandonment of service and petitions to amend

Federal Grain Inspection Service
PROPOSED RULES
Grain standards:
60848 Barley; inquiry

Federal Housing Commissioner—Office of Assistant Secretary for Housing
RULES
Mortgage and loan insurance programs:
60425 Condominium ownership; existing single family units
NOTICES
Authority delegations:
60828 Architecture and Engineering Standards Office, Director, et al.; design, construction, and alteration of structures for programs
60820 Deputy Assistant Secretary for Multifamily Housing Programs et al.; realignment of programmatic responsibility
60825 Deputy Assistant Secretary for Single Family Housing and Mortgagee Activities et al.; responsibilities for programs and functions
60829 Director, Office of Management, et al.; projects financed with mortgages

Federal Maritime Commission
NOTICES
Energy and environmental statements; availability, etc.:
60489 Maher Terminals, Inc. and Japan Line, Ltd., et al.; comprehensive container terminal, stevedoring and LCL cargo handling services
Freight forwarder licenses:
60489 Oceanland Service Co. et al.
60489 Padreda, Miriam
60538 Meetings; Sunshine Act

Federal Reserve System
NOTICES
60538 Meetings; Sunshine Act

Federal Trade Commission
RULES
Prohibited trade practices:
60408 Bill Crouch Imports, Inc.
60408 Chrysler Corp.
60409 Darvel, Inc.
60409 Gibson, Herbert R., Sr., et al.
NOTICES
60539 Meetings; Sunshine Act (2 documents)
Premerger notification waiting periods; early terminations:
60490 Citicorp
60490 Geosource, Inc.
60490 Sealaska Corp.
60491 Spie-Batignolles S.A.
60491 Union Oil Co.

Fine Arts Commission
NOTICES
60489 Meetings

Fish and Wildlife Service
RULES
Hunting:
60441 Okefenokee National Wildlife Refuge, et al., Ga.
60442, 60443 Pocasse National Wildlife Refuge, S. Dak. (2 documents)
60443, 60444 Sand Lake National Wildlife Refuge, S. Dak. (3 documents)
PROPOSED RULES
Endangered Species Commission:
60455 Bobcats, export; finding of nondetriment in response to Fla., Mass., and N. Mex.

Food and Drug Administration
RULES
Color additives, etc.:
60419 FD&C Yellow No. 5; labeling in food and drugs for human use; effective date confirmed. etc.
Drug labeling:
60754 Prescription drug products; patient package inserts requirements
Food additives:
60422 Tris(2,4-di-tert-butylphenyl)phosphite
Human drugs:
60423 CFR correction; tests and methods of assay of antibiotic and antibiotic-containing drugs; cepha antibiotic drugs
60576 Medical devices, hematology and pathology; classification (106 documents; see preamble of first document for complete listing)
PROPOSED RULES
Enforcement policy:
60449 Adverse findings and regulatory letters; practice and procedures; withdrawn
Hearings, public, before advisory committees; establishment or termination, etc.:
60449 Open session meetings; annual reports
NOTICES
Drug labeling:
60785 Prescription drug use; patient package inserts; draft guideline; inquiry
Medical devices:
60491 Abbott-HBe diagnostic kit; premarket approval
60492 Model 9310 lung water computer; premarket approval
Meetings:
60492 Consumer participation; information exchange (3 documents)
60493 PCB contaminants; study of PCB toxicity in monkeys; Cooperative Agreement to Health and Welfare, Canada

Food Safety and Quality Service
PROPOSED RULES
Meat and poultry inspection, mandatory:
60448 Livestock; humane handling and treatment; inquiry
NOTICES
60460 National Environmental Policy Act; implementation

Health, Education, and Welfare Department
See Health and Human Services Department

Health and Human Services Department
See Food and Drug Administration; Public Health Service.

Housing and Urban Development Department
See also Federal Housing Commissioner—Office of Assistant Secretary for Housing.
RULES
Low income housing:
60836 Public housing development

Interior Department
See Fish and Wildlife Service; Land Management Bureau; National Park Service; Surface Mining Office; Water and Power Resources Service.

Internal Revenue Service
PROPOSED RULES
Income taxes:
60450 Aliens, nonresident, election to be treated as resident, and U.S. income tax treaties

International Development Cooperation Agency
See Agency for International Development.

Interstate Commerce Commission
RULES
Tariffs and schedules:
60438 Simplification, format standardization, and electronic technology compatibility
PROPOSED RULES
Motor carriers:
60455 Commercial zones; expansion of Chicago, Ill., into Lake County, Ill.; extension of time
NOTICES
Agreements under sections 5a and b, applications for approval, etc.:
60503 Southern Ports Foreign Freight Committee
60499 Hearing assignments
60501 Long and short haul applications for relief
Motor carriers:
60497 Finance applications; correction
60497 Intercorporate hauling operations; intent to engage in
60503 Permanent authority applications; correction
Railroad car service orders; various companies:
60502 Chicago, Rock Island & Pacific Railroad Co.; all railroads required to hold empty Rock Island freight equipment
Railroad operation, acquisition, construction etc.:
60501 NWS Enterprises, Inc.
60502 Seaboard Coast Line Railroad Co.
Railroad services abandonment:
60501 Illinois Central Gulf Railroad Co.
60499 Norfolk & Western Railway Co.
Rerouting of traffic:
60501, 60502 All railroads (2 documents)

Justice Department
See Justice Statistics Bureau; Parole Commission.

Justice Statistics Bureau
NOTICES
Competitive research solicitation:
60504 Criminal justice, analysis of specific topics; statistical techniques and methods; extension of application deadline
60504 Criminal justice for future multi-State statistical programs; extension of application deadline

Labor Department
See Employment Standards Administration; Labor Statistics Bureau; Occupational Safety and Health Administration.

Labor Statistics Bureau
NOTICES
Meetings:
60504 Business Research Advisory Council Committees

Land Management Bureau
NOTICES
Meetings:
60494 Las Vegas District Multiple Use Advisory Council

Motor vehicles, off-road, etc.; area closures:
60494 Wyoming
Sale of public lands:
60494 California
Withdrawal and reservation of lands, proposed, etc.:
60493 California

Management and Budget Office
NOTICES
60521 Agency forms under review

National Oceanic and Atmospheric Administration
PROPOSED RULES
Fishery conservation and management:
60457 Atlantic mackerel and foreign fishing
NOTICES
Marine mammal permit applications, etc.:
60464 G&G Enterpirses, Ltd.
60465 Kooyman, Gerald
60464 Tel-Aviv Dolphinarium
Meetings:
60465 North Pacific Fishery Management Council; change

National Park Service
RULES
Special regulations:
60430 St. Croix National Scenic Rivers; correction
NOTICES
Environmental statements; availability, etc.:
60495 New River Gorge National River, W.Va.; general management plan
Mining plans of operations; availability, etc.:
60495 Death Valley National Monument

National Science Foundation
NOTICES
60539 Meetings; Sunshine Act

Navy Department
NOTICES
Meetings:
60467 Naval Discharge Review Board; hearings

Nuclear Regulatory Commission
NOTICES
Applications, etc.:
60506 Arkansas Power & Light Co.
60507 Carolina Power & Light Co.
60508 Commonwealth Edison Co.
60509 Commonwealth Edison Co. et al.
60510 Consolidated Edison Co. of New York, Inc.
60505 Detroit Edison Co.
60511 Duke Power Co.
60512 Duquesne Light Co. et al.
60512 Florida Power Corp. et al.
60513 Iowa Electric Light & Power Co. et al.
60505 Marubeni America et al.
60514 Metropolitan Edison Co. et al.
60515 Northern States Power Co.
60515 Omaha Public Power District
60515, 60516 Power Authority of State of New York (2 documents)
60518 Public Service Co. of Indiana, Inc., et al.
60518 Sacramento Municipal Utility District
60519 Tennessee Valley Authority
60520 Toledo Edison Co. et al.
Meetings:
60508 Three Mile Island; new requirements for power plants; clarification

Occupational Safety and Health Administration
RULES
Health and safety standards:
60656 Fire protection; fire brigade equipment and training, means of egress, and hazardous materials
State plans; development, enforcement, etc.:
60429 Oregon

Parole Commission
RULES
Federal prisoners; paroling, recommitting and supervising:
60427 Parole supervision termination guidelines; interim rule
PROPOSED RULES
Improving Government regulations:
60451 Regulatory agenda

Personnel Management Office
RULES
Reduction in force:
60401 Transfer of function provisions; clarification

Postal Service
PROPOSED RULES
Domestic Mail Manual:
60452 Bulk third class mail, special rate; identification of name and address of user
Restrictions on private carriage of letters:
60453 Privately shipped letters; alternate methods of paying postage

Public Health Service
RULES
Grants:
60431 Emergency medical services training programs

Railroad Retirement Board
NOTICES
60539 Meetings; Sunshine Act

Rural Electrification Administration
NOTICES
Environmental statements; availability, etc.:
60463 Hoosier Energy Division

Securities and Exchange Commission
RULES
60410 Tender offers; anti-fraud provisions
NOTICES
hearings, etc.:
60525 Eastern Edison Co. et al.
60526 General Finance Corp.
60526 Investors Funding Corp. of New York
60528 Wacoal Corp.
60528 Warner-Lambert International Capital Corp.
Self-regulatory organizations; proposed rule changes:
60523, 60524 American Stock Exchange, Inc. (2 documents)

60526 Midwest Stock Exchange, Inc.
60529 National Association of Securities Dealers, Inc.
60526-60528 New York Stock Exchange, Inc. (3 documents)
60527 Pacific Stock Exchange, Inc.

Soil Conservation Service
NOTICES
Environmental statements; availability, etc.:
60463 Little River Watershed, S.C.
60464 Powell Creek Watershed, Ala.

Surface Mining Office
NOTICES
Surface coal mining operations; lands unsuitable for mining; petitions, designations, etc.:
60495 Utah; combined petition evaluation and environmental impact statement

Textile Agreements Implementation Committee
NOTICES
Cotton and man-made textiles:
60465 Sri Lanka

Treasury Department
See also Internal Revenue Service.
NOTICES
Meetings:
60535 International Monetary System Advisory Committee

Water and Power Resources Service
NOTICES
Contract negotiations:
60496 Delta, Colo.; short-term municipal and industrial water service

MEETINGS ANNOUNCED IN THIS ISSUE

COMMERCE DEPARTMENT
Bureau of Economic Analysis—
60850 Direct Investment Surveys, 10-20-80

COMMISSION OF FINE ARTS
60489 Meeting, 10-7-80

CONSUMER PRODUCT SAFETY COMMISSION
60467 Toxicological Advisory Board, 10-7 and 10-8-80

HEALTH AND HUMAN SERVICES DEPARTMENT
Food and Drug Administration—
60492 Atlanta consumer exchange meeting, 9-23-80
60492 Los Angeles consumer exchange meeting, 9-24-80
60492 San Francisco consumer exchange meeting, 9-11-80

INTERIOR DEPARTMENT
Bureau of Land Management—
60494 Las Vegas District Multiple use advisory council, 10-23 and 10-24-80

LABOR DEPARTMENT
Bureau of Labor Statistics—
60504 Business Research Advisory Council Committees, 9-24-80

NUCLEAR REGULATORY COMMISSION
60508 Clarification of TMI-2 Related Requirements, 9-22, 9-23, 9-24, and 9-26-80

TREASURY DEPARTMENT
Office of the Secretary—
60535 International Monetary System Advisory Committee, 9-26-80

CHANGED MEETING

COMMERCE DEPARTMENT
National Oceanic and Atmospheric Administration—
60465 North Pacific Fishery Management Council and Scientific and Statistical Committee and Advisory Panel, 9-23 changed to 9-22-80

HEARING

DEFENSE DEPARTMENT
Navy Department—
60467 Naval Discharge Review Board, September and October hearings

CFR PARTS AFFECTED IN THIS ISSUE

A cumulative list of the parts affected this month can be found in the Reader Aids section at the end of this issue.

3 CFR
Proclamations:
4791 60399

5 CFR
351 60401

7 CFR
331 60402
910 (2 documents) 60403
947 60404
1040 60406
1421 60407
Proposed Rules:
810 60848
948 60446
981 60447

9 CFR
Proposed Rules:
313 60448

14 CFR
204 60408

15 CFR
Proposed Rules:
806 60850

16 CFR
13 (4 documents) 60408, 60409

17 CFR
240 60410

18 CFR
284 60418

21 CFR
74 60419
178 60422
201 60419
203 60754
436 60423
442 60423
864 (106 documents) 60576–60651
Proposed Rules:
7 60449
14 60449

24 CFR
234 60425
841 60836

26 CFR
Proposed Rules:
1 60450

28 CFR
2 60427
Proposed Rules:
2 60451

29 CFR
1910 60656
1952 60429

32 CFR
814 60430

33 CFR
207 60430

36 CFR
7 60430

39 CFR
Proposed Rules:
111 60452
310 60453

40 CFR
180 60430

42 CFR
57 60431

44 CFR
67 60437
Proposed Rules:
67 60453

47 CFR
83 60438

49 CFR
1300 60438
1303 60438
1304 60438
1306 60438
1307 60438
1308 60438
1310 60438
Proposed Rules:
1048 60455

50 CFR
32 (6 documents) 60441–60444
Proposed Rules:
23 60455
611 60457
656 60457
810 60455

Federal Register
Vol. 45, No. 179
Friday, September 12, 1980

Presidential Documents

Title 3—

The President

Proclamation 4791 of September 10, 1980

Veterans Day 1980

By the President of the United States of America

A Proclamation

Each year we set aside a special day to thank America's veterans for their unselfish sacrifice and service.

On Veterans Day, 1980, we pay tribute to 30 million living and 14 million deceased patriots who served in our Armed Forces so that you and I might live in freedom. We must honor these men and women as they deserve, not only with special ceremonies, not only through our support of veterans' benefits and services, but also by committing ourselves anew to the task of ensuring that the freedoms they helped to preserve and the Nation they fought to defend will be safe and secure for future generations of Americans.

NOW, THEREFORE, I, JIMMY CARTER, President of the United States of America, do hereby invite every citizen of our great country to join with me in observing Veterans Day on Tuesday, November 11, 1980, with appropriate ceremonies and activities.

I call upon all Americans to support the Veterans Day theme—"A Grateful Nation Remembers"—and I urge families, friends, neighbors and fellow citizens to show their gratitude by visiting ill and disabled veterans in Veterans Administration medical centers across the country.

I ask that Federal, State, and local government officials arrange for the display of the flag of the United States on this special day—the flag under which our veterans served with honor, pride, and distinction.

IN WITNESS WHEREOF, I have hereunto set my hand this tenth day of September, in the year of our Lord nineteen hundred and eighty, and of the Independence of the United States of America, the two hundred and fifth.

Jimmy Carter

[FR Doc. 80-28437
Filed 9-11-80; 10:44 am]
Billing code 3195-01-M

Rules and Regulations

Federal Register
Vol. 45, No. 179
Friday, September 12, 1980

This section of the FEDERAL REGISTER contains regulatory documents having general applicability and legal effect, most of which are keyed to and codified in the Code of Federal Regulations, which is published under 50 titles pursuant to 44 U.S.C. 1510.
The Code of Federal Regulations is sold by the Superintendent of Documents. Prices of new books are listed in the first FEDERAL REGISTER issue of each month.

OFFICE OF PERSONNEL MANAGEMENT

5 CFR Part 351

Reduction in Force

AGENCY: Office of Personnel Management.

ACTION: Final regulations.

SUMMARY: These regulations clarify the applicability of the transfer of function provisions of OPM's reduction in force regulations. In addition, these regulations clarify the rights of employees who are covered by the transfer of function provisions.

EFFECTIVE DATE: October 14, 1980.

FOR FURTHER INFORMATION CONTACT: Ted Dow or Tom Glennon, (202) 632-4422.

SUPPLEMENTARY INFORMATION:

Background

On May 13, 1980, OPM published proposed regulations in the Federal Register (45 FR 31379) that would clarify the transfer of function provisions of Part 351 of Title 5. The proposed regulations did not represent a change in OPM's transfer of function policies. The 60-day period for interested parties to submit written comments ended on July 15, 1980.

Discussion of Comments

Three written comments were received concerning the proposed regulations: one from an agency and two from labor organizations.

The agency which commented asked whether our reference for the definition of transfer of function, as identified in our proposed regulations, is correct. Specifically, the agency noted that the definition of transfer of function in our proposed regulations was identified as § 351.203(h) while the definition used in the most recent annual volume of this title is identified as § 351.203(i). Actually, the definitions identified in the annual volume as § 351.203(f) through (i) were redesignated as § 351.203(e) through (h), respectively, as part of an editorial change published in a final regulation on April 29, 1980 (45 FR 28301).

One union had no objection to the proposed regulations. However, the other union made a recommendation we revise the proposed § 351.302(b) to provide that an employee who is not competing for positions in the competitive area gaining the function must be in competition for positions in the competitive area losing the function. After full consideration of the union comment recommending a change in present policy, we decided not to incorporate this recommendation in our final regulations.

The transfer of function provisions of the Veterans Preference Act of 1944, as presently codified in 5 U.S.C. 3503, provide that an employee has the right to move with his or her work from one agency to another before the agency gaining the function may hire employees from another source to perform this work. Section 351.302(b) satisfies this requirement of the transfer of function provisions. However, there is no requirement of law which requires the agency losing the function to undertake a reduction in force to allow employees whose positions have been transferred to another agency for liquidation to compete with employees performing other work for remaining positions in the losing agency. The language of § 351.302(b) recognizes the requirements and the intent of 5 U.S.C. 3503, and is identical to language presently contained in 5 CFR 351.301.

Explanation of Final Regulations

The following changes in Part 351 are now made final: (1) Section 351.203(h) is reorganized for clarity.

(2) Section 351.301 is revised to include new material that clarifies the applicability of the transfer of function provisions of Part 351.

(3) A new § 351.302 is added, § 351.302(a) contains material formerly contained in § 351.301 that is now reorganized and revised for clarity.

(4) Section 351.302(b) also contains material formerly contained in § 351.301. Again, the material has been reorganized and revised for clarity.

(5) Section 351.302(c) contains new material providing that an employee has no right to transfer with his or her function unless the alternative in the agency losing the function is separation or demotion.

OPM has determined that this is a significant regulation for the purposes of E.O. 12044.

Office of Personnel Management.

Kathryn Anderson Fetzer,

Assistant Issuance System Manager.

Accordingly, 5 CFR Part 351 is amended as follows:

1. Section 351.203(h) is revised to read as follows:

§ 351.203 Definitions.

* * * * *

(h) "Transfer of function" means:

(1) The transfer of the performance of a continuing function from one competitive area and its addition to one or more other competitive areas; or

(2) The movement of the competitive area in which the function is performed to another commuting area.

2. Section 351.301 is revised to read as follows:

§ 351.301 Applicability.

The transfer of function provisions set forth in § 351.203.(i)(1) are applicable when the work of one or more employees is moved from one competitive area to another, regardless of whether or not the movement is made under authority of a statute, Executive Order, reorganization plan, or other authority.

3. Section 351.302 is added as follows:

§ 351.302 Transfer of employees.

(a) Before a reduction in force is made in connection with the transfer of any or all of the functions of a competitive area to another continuing competitive area, each competing employee in a position identified with the transferring function or functions shall be transferred to the continuing competitive area without any change in the tenure of his or her employment.

(b) An employee whose position is transferred under this subpart solely for liquidation, and who is not identified with an operating function specifically authorized at the time of transfer to continue in operation more than 60 days, is not a competing employee for other positions in the competitive area gaining the function.

(c) Regardless of an employee's personal preference, an employee has no right to transfer with his or her function, unless the alternative in the competitive area losing the function is separation or demotion.

(5 U.S.C. 1302, 3503)

[FR Doc. 80-28111 Filed 9-11-80; 8:45 am]
BILLING CODE 6325-01-M

DEPARTMENT OF AGRICULTURE

Animal and Plant Health Inspection Service

7 CFR Part 331

Mediterranean Fruit Fly; Regulated Area, Expansion

AGENCY: Animal and Plant Health Inspection Service, USDA.

ACTION: Final rule.

SUMMARY: Pursuant to the Federal Plant Pest Act this document amends the Mediterranean fruit fly regulations by expanding the area listed as a regulated area in Santa Clara County in California. This action is necessary as an emergency measure for the purpose of preventing the artificial spread of the Mediterranean fruit fly into noninfested areas of the United States.

DATES: Effective date of amendment September 12, 1980. Written comments concerning this final rule must be received on or before November 12, 1980.

ADDRESSES: Written comments should be submitted to H. V. Autry, Regulatory Support Staff, Plant Protection and Quarantine, Animal and Plant Health Inspection Service, U.S. Department of Agriculture, Federal Building, 6505 Belcrest Road, Room 635, Hyattsville, MD 20782.

FOR FURTHER INFORMATION CONTACT: H. V. Autry, Chief Staff Officer, Regulatory Support Staff, Plant Protection and Quarantine, APHIS, USDA, Federal Building, 6505 Belcrest Road, Room 635, Hyattsville, MD 20782, (301) 436-8247.

SUPPLEMENTARY INFORMATION: This final action has been reviewed under procedures established in Secretary's Memorandum 1955 to implement Executive Order 12044, and has been classified as "significant." The emergency nature of this action warrants publication of this final action without completion of a Final Impact Statement. A Final Impact Statement will be developed after public comments have been received.

Harvey L. Ford, Deputy Administrator of the Animal and Plant Health Inspection Service for Plant Protection and Quarantine, has determined that an emergency situation exists which warrants publication without opportunity for a public comment period on this final action because of the possibility that Mediterranean fruit fly could be spread artifically to noninfested areas of the United States. This situation requires immediate action to better control the spread of this pest.

Further, pursuant to the administrative procedure provisions in 5 U.S.C. 553, it is found upon good cause that notice and other public procedure with respect to this emergency final action are impracticable and contrary to the public interest; and good cause is found for making this emergency final action effective less than 30 days after publication of this document in the Federal Register. Comments have been solicited for 60 days after publication of this document, and this emergency final action will be scheduled for review so that a final document discussing comments received and any amendments required can be published in the Federal Register as soon as possible.

Written Comments

Interested persons are invited to submit written comments concerning the final rule. Comments should bear a reference to the date and page numbers of this issue of the Federal Register. All written comments made pursuant to this document will be made available for public inspection at the Federal Building, 6505 Belcrest Road, Room 635, Hyattsville, MD 20782, during regular hours of business, 8 a.m. to 4:30 p.m., Monday through Friday, except holidays, in a manner convenient to the public business (7 CFR 1.27(b)).

Background

The Mediterranean fruit fly, *Ceratitis capitata* Wiedeman, is one of the world's most destructive pests of numerous fruits and vegetables, especially citrus fruits. It can cause serious economic losses. Heavy infestations can cause complete loss of crops, and losses of 25 to 50 percent are not uncommon. Its short life cycle permits the rapid development of serious outbreaks.

Because of infestations of the Mediterranean fruit fly found in California in areas in Los Angeles County and Santa Clara County, emergency Mediterranean fruit fly regulations were published in the Federal Register on July 29, 1980 (45 FR 50318-50324), and amendments to the regulations were published in the Federal Register on August 15, 1980 (45 FR 54302-54304). The regulations and the amendments thereof became effective on the dates of publication.

For the purpose of preventing the artificial spread of the Mediterranean fruit fly to noninfested areas in the United States, the regulations restrict the interstate movement from the regulated areas in Los Angeles County and Santa Clara County in California of articles designated as regulated articles.

Santa Clara County

Based on trapping surveys conducted by inspectors of the U.S. Department of Agriculture and State agencies of California, it has now been determined that the Mediterranean fruit fly has spread beyond the outler perimeter of the areas in Santa Clara County previously designated as regulated areas. Therefore, in order to prevent the further spread of the Mediterranean fruit fly it is necessary as an emergency measure pursuant to sections 105 and 106 of the Federal Plant Pest Act (7 U.S.C. 150dd, 150ee) to amend the regulations to expand the regulated areas in Santa Clara County to cover the areas in which the Mediterranean fuit fly now occurs.

Accordingly, in order to accomplish this objective, the description for the regulated areas in Santa Clara County in California in § 331.1-2(c) of the regulations (7 CFR 331.1-2(c)) is amended to read as follows:

§ 331.1-2 Regulated areas.

* * * * *

(c) * * * California.

* * * * *

Santa Clara County. That portion of Santa Clara County bounded by a line beginning at the junction of Metcalf Road and U.S. Highway 101, thence southeasterly along U.S. Highway 101 to its junction with Bailey Avenue, thence southwesterly along Bailey Avenue to its junction with McKean Road, thence northwesterly along McKean Road to its junction with Almaden Road, thence southerly along Almaden Road to its junction with Alimitos Road, thence southerly along an imaginery line to the northern terminus of Loma Prieta Road, thence southerly on Loma Prieta Road to its junction with the Santa Clara County line, thence northwesterly, northerly, and easterly on the Santa Clara County line to its junction with Mt. Day Road (direct road which is approximately 8 miles east of Interstate 680), thence along an imaginary line projected southeast from such junction to the crest of Black Mountain, thence southerly along an imaginary line projected from the crest of Black Mountain to the northernmost point of Joseph D. Grant

County Park, thence easterly and southerly along the boundaries of the Joseph D. Grant County Park to its junction with San Felipe Road No. 2, thence along San Felipe Road No. 2 to its junction with Metcalf Road, thence southerly and westerly along Metcalf Road to the point of beginning.

(Secs. 105 and 106, 71 Stat. 32 and 33; 7 U.S.C. 150dd, 150ee; 37 FR 28464, 28477, as amended; 38 FR 19141)

Done at Washington, D.C., this 9th day of September 1980.

Jerry C. Hill,

Deputy Assistant Secretary for Marketing and Transportation Services, U.S. Department of Agriculture.

[FR Doc. 80-28242 Filed 9-11-80; 8:45 am]

BILLING CODE 3410-34-M

Agricultural Marketing Service

7 CFR Part 910

[Lemon Regulation 268, Am. 1; Lemon Regulation 270]

Lemons Grown in California and Arizona; Limitation of Handling

AGENCY: Agricultural Marketing Service, USDA.

ACTION: Final rule.

SUMMARY: This action establishes the quantitiy of California-Arizpna lemons that may be shipped to the fresh market during the period September 14–20, 1980, and increases the quantity of such lemons that may be so shipped during the period September 7–13, 1980. Such action is needed to provide for orderly marketing of fresh lemons for the period specified due to the marketing situation confronting the lemon industry.

DATES: The regulation becomes effective September 14, 1980, and the amendment is effective for the period September 7–13, 1980.

FOR FURTHER INFORMATION CONTACT: Malvin E. McGaha, 202–447–5975.

SUPPLEMENTARY INFORMATION: *Findings.* This regulation and amendment are issued under the marketing agreement, as amended, and Order No. 910, as amended (7 CFR Part 910), regulating the handling of lemons grown in California and Arizona. The agreement and order are effective under the Agricultural Marketing Agreement Act of 1937, as amended (7 U.S.C. 601–674). The action is based upon the recommendations and information submitted by the Lemon Administrative Committee and upon other available information. It is hereby found that this action will tend to effecutate the declared policy of the act.

This action is consistent with the marketing policy for 1979–80 which was designated significant under the procedures of Executive Order 12044. The marketing policy was recommended by the committee following discussion at a public meeting on July 8, 1980. A final impact analysis on the marketing policy is available from Malvin E. McGaha, Chjief, Fruit Branch, F&V, AMS, USDA, Washington, D.C. 20250, telephone 202–447–5975.

The committee met again publicly on September 9, 1980, at Los Angeles, California, to consider the current and prospective conditions of supply and demand and recommended a quantity of lemons deemed advisable to be handled during the specified weeks. The committee reports the demand for lemons is improving.

It is further found that there is insufficient time between the date when information became available upon which this regulation and amendment are based and when the actions must be taken to warrant a 60 day comment period as recommended in E.O. 12044, and that it is impracticable and contrary to the public interest to give preliminary notice, engage in public rulemaking, and psotpone the effective date until 30 days after publication in the Federal Register (5 U.S.C. 553), and the amendment relieves restrictions on the handling of lemons. It is necessary to effectuate the declared purposes of the act to make these regulatory provisions effective as specified, and handlers have been apprised of such provisions and the effective times.

1. Section 910.570 is added as follows:

§ 910.570 Lemon Regulation 270.

Order. (a) The quantity of lemons grown in California and Arizona which may be handled during the period September 14, 1980, through September 20, 1980, is established at 175,268 cartons.

(b) As used in this section, "handled" and "cartons" mean the same as defined in the marketing order.

2. Paragraph (a) of § 910.568 Lemon Regulation 268 (45 FR 58814) is amended to read as follows:

§ 910.568 Lemon Regulation 268.

(a) The quantity of lemons grown in California and Arizona whicxh may be handled during the period September 7, 1980, through September 14, 1980 is established at 175,000 cartons.

* * * * *

(Secs. 1–19, 48 Stat. 31, as amended; 7 U.S.C. 601–674)

Dated: September 11, 1980.

D. S. Kuryloski,

Deputy Director, Fruit and Vegetable Division, Agricultural Marketing Service.

[FR Doc. 80-28454 Filed 9-11-80; 12:25 pm]

BILLING CODE 3410-02-M

7 CFR Part 910

[Lemon Regulation 269]

Lemons Grown in California and Arizona; Minimum Size Requirement

AGENCY: Agricultural Marketing Service, USDA.

ACTION: Final rule.

SUMMARY: This regulation sets a minimum size requirement of 1.82 inches in diameter for shipments of lemons grown in California and Arizona. This requirement is needed to provide for orderly marketing in the interest of producers and consumers.

EFFECTIVE DATES: September 21, 1980, through September 19, 1981.

FOR FURTHER INFORMATION CONTACT: Malvin E. McGaha, Chief, Fruit Branch, F&V, AMS, USDA, Washington, D.C. 20250, telephone 202–447–5975. The Final Impact Statement relative to this final rule is available upon request from the above named individual.

SUPPLEMENTARY INFORMATION: *Findings.* This final action has been reviewed under USDA procedures in Secretary's Memorandum 1955 to implement Executive Order 12044 and has been classified "not significant". On August 12, 1980, notice was published in the Federal Register (45 FR 53487) inviting written comments on the proposed minimum size requirement applicable to lemons grown in California and Arizona. No such material was submitted.

This regulation is issued under the marketing agreement, as amended, and Order No. 910, as amended, regulating the handling of lemons grown in California and Arizona. The agreement and order are effective under the Agricultural Marketing Agreement Act of 1937, as amended (7 U.S.C. 601–674). The action is based upon the recommendations and information submitted by the Lemon Administrative Committee, and upon other available information.

Shipments of lemons from the production area are now in progress, and such shipments are regulated by size through September 20, 1980, under Lemon Regulation 217, as amended (44 FR 61578, 69918). This regulation, which would become effective September 21,

1980, would require shipments of lemons to be no smaller than 1.82 inches in diameter. The volume and size composition of the lemon crop in California and Arizona is such that ample supplies of the more desirable sizes are available to satisfy the demand in domestic fresh markets. The committee estimates that approximately 2–3% of the season's crop is smaller than 1.82 inches in diameter. This regulation is designed to permit shipment of ample supplies of lemons of acceptable sizes, maturity, and juice content. Lemons which are smaller than 1.82 inches in diameter normally have negligible demand and sales opportunity, as they have relatively low juice yields. Lemons failing to meet this minimum size requirement could be shipped to fresh export markets, left on the trees to attain further growth, or utilized in processing. The regulation is consistent with the objective of the act of promoting orderly marketing in the interest of producers and consumers.

After consideration of all relevant matter presented, including the proposals in the notice and other available information, it is hereby found that the following regulation is in accordance with the marketing agreement and order and will tend to effectuate the declared policy of the act.

It is further found that good cause exists for not postponing the effective date of this regulation until 30 days after publication in the Federal Register (5 U.S.C. 553) in that (1) shipments of lemons are currently in progress and this regulation should be applicable to all shipments made during the season in order to effectuate the declared policy of the act; (2) the regulation is the same as that specified in the notice to which no exceptions were filed; (3) the regulatory provisions are the same as those currently in effect; and (4) compliance with this regulation will not require any special preparation on the part of the persons subject thereto which cannot be completed by the effective time hereof.

Therefore, a new § 910.569 Lemon Regulation 269 is added to read as follows: (§ 910.569 expires September 19, 1981, and will not be published in the annual Code of Federal Regulations).

§ 910.569 Lemon Regulation 269.

(a) From September 21, 1980, through September 19, 1981, no handler shall handle any lemons grown in District 1, District 2, or District 3 which are of a size smaller than 1.82 inches in diameter, which shall be the largest measurement at a right angle to a straight line running from the stem to the blossom end of the fruit: *Provided,* That not to exceed 5 percent, by count, of the lemons in any type of container may measure smaller than 1.82 inches in diameter.

(b) As used in this section, "handle", "handler", "District 1", "District 2", and "District 3" each shall have the same meaning as when used in said amended marketing agreement and order.

(Secs. 1–19, 48 Stat. 31, as amended; 7 U.S.C. 601–674)

Dated: September 9, 1980.

D. S. Kuryloski,

Deputy Director, Fruit and Vegetable Division, Agricultural Marketing Service.

[FR Doc. 80-28243 Filed 9-11-80; 8:45 am]
BILLING CODE 3410-02-M

---

7 CFR Part 947

Irish Potatoes Grown in Modoc and Siskiyou Counties in California and in All Counties in Oregon Except Malheur County; Handling Regulation

AGENCY: Agricultural Marketing Service, USDA.

ACTION: Final rule.

SUMMARY: This regulation requires fresh market shipments of potatoes grown In Modoc and Siskiyou Counties in California and all counties in Oregon except Malheur County to be inspected and meet minimum grade, size, cleanness, pack and maturity requirements. The regulation will promote orderly marketing of such potatoes and keep less desirable sizes and qualities from being shipped to consumers.

EFFECTIVE DATE: September 12, 1980.

FOR FURTHER INFORMATION CONTACT: Charles W. Porter, Chief, Vegetable Branch, Fruit and Vegetable Division, AMS, U.S. Department of Agriculture, Washington, D.C. 20250 (202) 447–2615. The Final Impact Statement relating to this final rule is available from Mr. Porter.

SUPPLEMENTARY INFORMATION: This final action has been reviewed under USDA procedures established in Secretary's Memorandum 1955 to implement Executive Order 12044, and has been classified "not significant."

Marketing Agreement No. 114 and Order No. 947, both as amended, regulate the handling of potatoes grown in designated counties of Oregon and California. They are effective under the Agricultural Marketing Agreement Act of 1937, as amended (7 U.S.C. 601–674). The Oregon-California Potato Committee, established under the order, is responsible for its local administration.

This regulation is based upon recommendations made by the committee at its public meeting in Bend, Oregon, on June 12, 1980.

The grade, size, maturity, pack, cleanness and inspection requirements specified herein are generally similar to those issued during the last season. They are necessary to prevent potatoes of low quality or undesirable sizes from being distributed to fresh market outlets. These specific requirements would benefit consumers and producers by standardizing and improving the quality of the potatoes shipped from the production area, thereby promoting orderly marketing and will tend to effectuate the declared policy of the act.

The committee recommends that all varieties be at least U.S. No. 2 grade. Minimum sizes would be: For export—1½ inches in diameter; Districts No. 1–4—1⅞ inches for all varieties; and District No. 5—2 inches or 4 ounces for all varieties.

Potatoes grown in and shipped from District 5 must meet higher size requirements, comparable to those in effect in Washington State which is contiguous. District 5 potatoes compete directly with Washington potatoes in the fresh market place and therefore size requirements should be similar.

Exceptions are provided to certain of these requirements to recognize special situations in which such requirements are inappropriate or unreasonable.

Inspection requirements are modified for certain handlers whose facilities are located far enough from major production areas to cause a substantial financial burden in maintaining a full-time Federal-State inspector.

A specified quantity of potatoes is exempt from maturity requirements in order to permit growers to make test diggings without loss of the potatoes so harvested.

Shipments are permitted to certain special purpose outlets without regard to minimim grade, size, cleanness, maturity, pack and inspection requirements, provided that safeguards are met to prevent such potatoes from reaching unauthorized outlets. Certified seed is exempt, subject to the safeguard provisions only when shipped outside the district where grown.

Shipments for use as livestock feed within the production area or to specified adjacent areas are exempt; a limit to the destinations of such shipments is provided so that their use for the purpose specified can be reasonably assured. Shipments of potatoes between Districts 2 and 4 for planting, grading, and storing are exempt from requirements because these two areas are homogenous and have no natural division. Other districts are more clearly separated and do not

have this problem. For the same reason, potatoes grown in District 5 may be shipped without regard to the aforesaid requirements to the counties of Adams, Benton, Franklin and Walla Walla in the State of Washington, and Malheur County, Oregon, for grading and storing. Since no purpose would be served by regulating potatoes used for charity purposes, such potatoes are exempt. Also potatoes for most processing uses are exempt under the legislative authority for this part.

Requirements for export shipments differ from those for domestic markets. While the standard quality requirements are desired in foreign markets, smaller sizes are more acceptable. Therefore, different requirements are set forth for export shipments.

Findings. After considering all relevant matters, including the proposal in the notice, it is found that the following handling regulation will tend to effectuate the declared policy of the act.

It is further found that good cause exists for not postponing the effective date of this regulation until 30 days after its publication in the Federal Register (5 U.S.C. 553) in that (1) shipments of potatoes grown in the production area have already begun, (2) to maximize benefits to producers, this regulation should apply to as many shipments as possible during the marketing season, (3) notice was given in the July 29, 1980, Federal Register (45 FR 50347) allowing interested persons until August 28, 1980, to file comments, and none was filed, and (4) compliance with this regulation, which is similar to regulations issued during previous seasons, requires no special preparation by handlers subject to it which cannot be completed by the effective date.

The regulation is as follows:

§ 947.338 [Terminated]

1. Handling regulation § 947.338, as corrected, effective July 16, 1979, through October 15, 1980, and as amended (44 FR 41171, 46250 and 45 FR 48576) shall be terminated upon the effective date of this section.

2. Section 947.339 is added to read as set forth below.

§ 947.339 Handling regulation.

During the period September 12, 1980, through October 15, 1981, no person shall handle any lot of potatoes unless such potatoes meet the requirements of paragraphs (a) through (f) of this section or unless such potatoes are handled in accordance with paragraphs (g) and (h), or (i) of this section.

(a) *Grade requirements.* All varieties—U.S. No. 2, or better grade.

(b) *Minimum size requirements.* (1) For Export: All varieties—1½ inches in diameter.

(2) For Districts No. 1 through 4: All varieties—1⅞ inches in diameter.

(3) For District No. 5: All varieties—2 inches in diameter or 4 ounces in weight.

(c) *Cleanness requirements.* All varieties and grades—As required in the United States Standards for Grades of Potatoes, except that U.S. Commercial may be no more than "slightly dirty."

(d) *Maturity (skinning) requirements.* (1) Round and White Rose varieties: not more than "moderately skinned."

(2) Other Long Varieties (including but not limited to Russet Burbank and Norgold): not more than "slightly skinned."

(3) Not to exceed a total of 100 hundredweight of potatoes may be handled during any seven day period without meeting these maturity requirements. Prior to shipment of potatoes exempt from the above maturity requirements, the handler shall obtain from the committee a Certificate of Privilege.

(e) *Pack.* Potatoes packed in 50-pound cartons shall be U.S. No. 1 grade or better, except that potatoes that fail to meet the U.S. No. 1 grade only because of hollow heart and/or internal discoloration may be shipped provided the lot contains not more than 10 percent damage by hollow heart and/or internal discoloration, as identified by USDA Color Photograph E (Internal Discoloration—U.S. No. 2—Upper Limit), POT-CP-9, May, 1972, or not more than 5 percent serious damage by internal defects.

(f) *Inspection.* (1) Except when relieved by paragraphs (g) and (h), or (i) of this section and subparagraph (2) of this paragraph, no person shall handle potatoes without first obtaining inspection from an authorized representative of the Federal-State Inspection Service.

(2) Handlers making shipments from facilities located in an area where inspection costs would otherwise exceed one and one-half times the current per-hundredweight inspection fee, are exempt from on-site inspection provided such handler has made application to the committee for inspection exemption on forms supplied by the committee, and provided further that such handler signs an agreement with the committee to report each shipment on a daily basis and pay the committee a sum equal to the current inspection fee.

(3) For the purpose of operation under this part each required inspection certificate is hereby determined, pursuant to § 947.60(c) to be valid for a period of not to exceed 14 days following completion of inspection as shown on the certificate. The validity period of an inspection certificate covering inspected and certified potatoes that are stored in mechanically refrigerated storage within 14 days of the inspection shall be 14 days plus the number of days that the potatoes were held in refrigerated storage.

(4) Any lot of potatoes previously inspected pursuant ot § 947.60 and certified as meeting the requirements of this part is not required to have additional inspection under § 947.60(b) after regrading, resorting, or repacking such potatoes, if the inspection certificate is valid at the time of regrading, resorting, or repacking of the potatoes.

(g) *Special purpose shipments.* The minimum grade, size, cleanness, maturity, pack and inspection requirements set forth in paragraphs (a) through (f) of this section shall not be applicable to shipments of potatoes for any of the following purposes:

(1) Certified seed, subject to applicable safeguard requirements of paragraph (h) of this section.

(2) Livestock feed: However, potatoes, may not be handled for such purposes if destined to points outside of the production area, except that shipments to the counties of Benton, Franklin and Walla Walla in the State of Washington and to Malheur County, Oregon, may be made, subject to the safeguard provisions of paragraph (h) of this section.

(3) Planting in the district where grown: Further, potatoes for this purpose grown in District No. 2 or District No. 4 may be shipped between those two districts.

(4) Grading or storing under the following provisions:

(i) Between districts within the production area for grading or storing if such shipments meet the safeguard requirements of paragraph (h) of this section.

(ii) Potatoes grown in District No. 2 or District No. 4 may be shipped for grading or storing between those two districts without regard to the safeguard requirements of paragraph (h) of this section.

(iii) Potatoes grown in District No. 5 may be shipped for grading and storing to points in the counties of Adams, Benton, Franklin and Walla Walla in the State of Washington, or to Malheur County, Oregon, without regard to the safeguard provisions of paragraph (h) of this section.

(5) Charity: Except that shipments for charity may not be resold if they do not meet the requirements of the marketing

order, and that shipments in excess of 5 hundredweight per charitable organization shall be subject to the safeguard provisions of paragraph (h) of this section.

(6) Starch manufacture.

(7) Canning, freezing, prepeeling, and "other processing" (except starch manufacturing), as hereinafter defined (including storage for such purposes).

(h) *Safeguards.* (1) Each handler making shipments of certified seed outside the district where grown pursuant to paragraph (g) shall obtain from the committee a Certificate of Privilege, and shall furnish a report of shipments to the committee on forms provided by it.

(2) Each handler making shipments of potatoes pursuant to subparagraphs (2), (4)(i), and (5) of paragraph (g) of this section shall obtain a Certificate of Privilege from the committee, and shall report shipments at such intervals as the committee may prescribe in its administrative rules.

(3) Each handler making shipments pursuant to subparagraph (7) of paragraph (g) of this section may ship such potatoes only to persons or firms designated as manufacturers of potato products by the committee, in accordance with its administrative rules.

(i) *Minimum quantity exemption.* Any person may handle not more than 19 hundredweight of potatoes on any day without regard to the inspection requirements of § 947.60 and to the assessment requirements of § 947.41 of this part except no potatoes may be handled pursuant to this exemption which do not meet the requirements of paragraph (a), (b), (c), (d) and (e) of this section. This exemption shall not apply to any part of a shipment which exceeds 19 hundredweight.

(j) *Definitions.* (1) The terms "U.S. No. 1," "U.S. Commercial," "U.S. No. 2," "moderately skinned" and "slightly skinned" shall have the same meaning as when used in the U.S. Standards for Grades of Potatoes (7 CFR 2851.1540–2851.1566) including the tolerances set forth therein.

(2) The term "slightly dirty" means potatoes that are not damaged by dirt.

(3) The term "prepeeling" means the commercial preparation in a prepeeling plant of clean, sound, fresh potatoes by washing, peeling or otherwise removing the outer skin, trimming, sorting, and properly treating to prevent discoloration preparatory to sale in one or more of the styles of peeled potatoes described in § 2852.2422 United States Standards for Grades of Peeled Potatoes (7 CFR 2852.2421–2852.2433).

(4) The term "other processing" has the same meaning as the term appearing in the act and includes, but is not restricted to, potatoes for dehydration, chips, shoestrings, or starch, and flour. It includes only that preparation of potatoes for market which involves the application of heat or cold to such an extent that the natural form or stability of the commodity undergoes a substantial change. The act of peeling, cooling, slicing, dicing, or applying material to prevent oxidation does not constitute "other processing."

(5) Other terms used in this section shall have the same meaning as when used in Marketing Agreement No. 114, as amended, and this part.

(Secs. 1–19, 48 Stat. 31, as amended; 7 U.S.C. 601–674).

Dated: September 8, 1980, to become effective September 12, 1980.

D. S. Kuryloski,

Deputy Director, Fruit and Vegetable Division, Agricultural Marketing Service.

[FR Doc. 80-28239 Filed 9-11-80; 8:45 am]

BILLING CODE 3410-02-M

---

7 CFR Part 1040

[Milk Order No. 40]

Milk in the Southern Michigan Marketing Area; Order Suspending Certain Provisions

AGENCY: Agricultural Marketing Service, USDA.

ACTION: Suspension of rule.

SUMMARY: This order suspends for the period October 1980 through March 1981 some provisions of the order affecting the regulatory status of milk supply plants. The suspension would reduce the proportion of milk receipts at a supply plant that must be shipped to pool distributing plants during a month to qualify the supply plant for pooling. Without the suspension, it is likely that there would be uneconomic movements of milk solely for the purpose of assuring that supply plants regularly associated with the market would remain pooled under the order. The suspension, which is based on information considered at a public hearing in March 1980, was requested by a cooperative association that represents a substantial proportion of the producers supplying the market.

DATE: Effective October 1, 1980.

FOR FURTHER INFORMATION CONTACT: Martin J. Dunn, Marketing Specialist, Dairy Division, United States Department of Agriculture, Washington, D.C. 20250, 202–447–7311.

SUPPLEMENTARY INFORMATION: Prior document in this proceeding: Notice of hearing issued February 28, 1980, published March 4, 1980 (45 FR 14047).

This suspension order is issued pursuant to the provisions of the Agricultural Marketing Agreement Act of 1937, as amended (7 U.S.C. 601 *et seq.*), and of the order regulating the handling of milk in the Southern Michigan marketing area.

It is hereby found and determined that for the months of October 1980 through March 1981 the following provisions of the order do not tend to effectuate the declared policy of the Act:

In the first sentence of § 1040.7(b)(1), the words "40 percent" and "for each of the months of April through September."

As suspended that portion of the first sentence would read ". . . not less than 30 percent of the total quantity. . . ."

Statement of Consideration

The suspension will reduce for six months the proportion of milk receipts at a supply plant that must be shipped to pool distributing plants to qualify the supply plant as a pool plant. Presently, a supply plant must ship not less than 40 percent of the total quantity of Grade A milk received at the plant from producers or cooperative associations, or diverted from it to nonpool plants, to qualify as a pool supply plant during the months of October through March. The suspension reduces the proportion to 30 percent, the level which now applies during the months of April through September.

During the six-year period of 1974 through 1979, receipts of milk in the Southern Michigan market from producers increased nearly 14 percent while producer milk utilized in Class I decreased more than 5 percent. Under this supply situation, unneeded shipments of milk from supply plants to distributing plants were being made merely to assure the continued pooling of supply plants regularly associated with the market. To avoid the unneeded shipments, producers requested a suspension of the 40 percent shipping percentage for the months of October through March in both the 1978–79 and 1979–80 periods. To accommodate this, the pertinent provisions of the order were suspended (43 FR 36045 and 44 FR 53720).

The action being taken in this suspension, which was requested by the Michigan Milk Producers Association, was considered at a public hearing held March 25–26, 1980, at Flint, Michigan. At the hearing, the cooperative proposed a permanent amendment to the order to reduce the shipping requirements during the months of October through March to 30 percent of a supply plant's receipts of producer milk and milk received from a cooperative association in its capacity as a bulk tank handler. Proponent's

witness testified that the shipping percentage for pooling supply plants during the months of October through March should be reduced to 30 percent in the interest of reducing needless fuel consumption and the associated transportation costs. He stated also that the 40 percent shipping requirement is not necessary to assure that milk will be made available to the fluid market because the market has operated with an effective shipping requirement of 30 percent for the past 2 years. He claimed that during this period there has been an adequate supply of milk available to distributing plants.

The proposal was supported by another cooperative association and by a proprietary handler who operates two pool supply plants and a pool distributing plant. There was no opposition to the proposal.

It is anticipated that in due course a decision on whether to reduce the pool supply plant shipping percentage will be issued after a complete evaluation of the hearing record. In the interim, suspension of the shipping percentage for the months of October 1980 through March 1981 is warranted on the basis of the hearing evidence. The suspension will enable handlers to maintain the continued pooling of supply plants that have regularly supplied the fluid milk needs of the market without incurring excessive transportation costs solely to qualify the supply plants for pooling. As indicated, these provisions were suspended for the months of October through March in both the 1978–79 and 1979–80 periods and this action merely extends the suspensions for another temporary period.

It is hereby found and determined that thirty days' notice of the effective date hereof is impractical, unnecessary, and contrary to the public interest in that the suspension does not require of persons affected substantial or extensive preparation prior to the effective date and the marketing problems that provide the basis for this suspension were fully reviewed at a public hearing and all interested parties had the opportunity of being heard on this matter.

Therefore, good cause exists for making this order effective October 1, 1980.

It is therefore ordered, That the aforesaid provisions of the order are hereby suspended for the months of October 1980 through March 1981.

(Secs. 1–19, 48 Stat. 31, as amended; 7 U.S.C. 601–674)

Effective date: October 1, 1980.

Signed at Washington, D.C., on: September 5, 1980.

Jerry Hill,

Deputy Assistant Secretary for Marketing and Transportation Services.

[FR Doc. 80-28189 Filed 9-11-80; 8:45 am]

BILLING CODE 3410-02-M

Commodity Credit Corporation

7 CFR Part 1421

[CCC Grain Price Support Regulations, Grain Reserve Program Supplement, Amendment 3]

Loans, Purchases, and Other Operations; Grain Reserve Program for 1976 and Subsequent Crops

AGENCY: Commodity Credit Corporation, USDA.

ACTION: Final rule.

SUMMARY: The purpose of this final rule is to amend the regulations governing the Grain Reserve Program for 1976 and subsequent crops to provide that farmers may have up to 90 days for settlement of a reserve loan after a commodity in the reserve is called. The extension of the settlement period from 30 days to 90 days is needed to provide adequate time for orderly marketing of the called commodity.

EFFECTIVE DATE: This regulation shall become effective September 11, 1980.

ADDRESS: Price Support and Loan Division, ASCS, USDA, 3741 South Building, P.O. Box 2415, Washington, D.C. 20013.

FOR FURTHER INFORMATION CONTACT: Harold Jamison, ASCS, (202) 447–7973. The Final Impact Statement describing the options considered in developing this final rule and the impact of implementing each option is available on request from the above-named.

SUPPLEMENTARY INFORMATION: This final action has been reviewed under procedures established in Secretary's Memorandum No. 1955 to implement Executive Order 12044, and has been classified as "significant."

Jerome F. Sitter, Director, Price Support and Loan Division, ASCS, USDA, has determined that an emergency situation exists which warrants publication without opportunity for a public comment period on this final action because current procedure provides only 30 days for settlement of a called reserve loan. The national average market price of corn is near the call price. If corn in the reserve is called it would be difficult for farmers to orderly market the called corn within the 30-day period. Further, pursuant to the administrative procedure provision in 5 U.S.C. 553, it is found upon good cause that notice and other public procedure with respect to this emergency final action are impracticable and contrary to the public interest; and good cause is found for making this emergency final action effective less than 30 days after publication of this document in the Federal Register. Comments will be solicited for 60 days after publication of this document, and this emergency final action will be scheduled for review so that a final document discussing comments received and any amendments required can be published in the Federal Register as soon as possible.

The title and number of the federal assistance programs to which this action applies are: Title: Grain Reserve Program; Number 10.067 as found in the Catalog of Federal Domestic Assistance. This action will not have a significant impact specifically on area and community development. Therefore, review as established by OMB Circular A–95 was not used to assure that units of local Government are informed of this action.

Regulations in effect prior to this action provided that, when a reserve loan is called, the farmer must redeem the commodity within 30 days or forfeit the commodity to the Commodity Credit Corporation (CCC). The settlement period of 30 days is not adequate to permit farmers to market the called commodity in an orderly manner. Subsection 1421.543(c) is amended to provide 90 days for repayment of the reserve loan. The extended period for settlement will provide an adequate period for the market to absorb the called commodity and permit farmers to market the commodity in an orderly manner.

Final Rule

Accordingly, 7 CFR Part 1421 is amended by revising § 1421.543(c) as follows:

§ 1421.543 Release levels, redemption, requirements, and early redemption charges.

* * * * *

(c) Redemption of commodity when the national average market price is at least 175 percent for wheat or 140 percent for feed grain of national average loan rate.

(1) When CCC determines that the national average market price is at least 175 percent for wheat or 140 percent for feed grain of the national average loan rate, the loan shall be called. Such call will be determined in the same manner as prescribed for release levels in

§ 1421.543(a). If the loan is not redeemed within 90 days after notification, CCC may take title to the commodity.

(2) Notwithstanding any provision of this Subpart, with respect to loans called under paragraph (c)(1) of this section, the Secretary may provide producers the options of (i) delaying their date for settlement of such loans for a period of 30 days and such additional 30-day periods as determined necessary by the Secretary in areas where the Secretary determines conditions exist which disrupt orderly marketing of the commodity under loan and (ii) reentering the loan into the reserve loan program under all the original terms and conditions, if subsequent to such loan call the national average market price of the loan commodity falls below the release level applicable to the loan commodity.

* * * * *

Dated: September 4, 1980.

Bob Bergland,

Secretary of Agriculture.

[FR Doc. 80-27984 Filed 9-11-80; 8:45 am]

BILLING CODE 3410-05-M

CIVIL AERONAUTICS BOARD

14 CFR Part 204

[Reg. ER-1198; Amdt. No. 1 to Part 204]

Data To Support Fitness Determinations; Approval by the General Accounting Office

AGENCY: Civil Aeronautics Board.

ACTION: Final rule.

SUMMARY: This final rule gives notice that the General Accounting Office has approved the application requirements contained in Part 204 of the Board's Economic Regulations governing data submission requirements for fitness determinations (ER-1180, 45 FR 42593, June 25, 1980). This approval is required under the Federal Reports Act, and was transmitted to the Civil Aeronautics Board by letter dated August 26, 1980. Under the Airline Deregulation Act of 1978, the CAB must determine the initial fitness of all applicants for passenger route authority, all commuters serving an eligible point and carriers who propose to provide, or who are providing, essential air service.

DATES: Adopted: September 5, 1980. Effective: September 5, 1980.

FOR FURTHER INFORMATION CONTACT: Clifford M. Rand, Chief, Data Requirements Division, Office of Economic Analysis, Civil Aeronautics Board, 1825 Connecticut Avenue, NW., Washington, D.C. 20428, (202) 673-6042.

Accordingly, the Civil Aeronautics Board amends Part 204 of its Economic Regulations (14 CFR Part 204) by adding the following note at the end of Part 204 to read:

Note.—The application requirements contained in §§ 204.4, 204.5, 204.6 and 204.7 have been approved by the U.S. General Accounting Office under B-180226 (R0687).

This amendment is issued by the undersigned pursuant to the delegation of authority from the Board to the Secretary in 14 CFR 385.24(b). (Sec. 204 of the Federal Aviation Act of 1958, as amended, 72 Stat. 743; 49 U.S.C. 1324).

By the Civil Aeronautics Board.

Phyllis T. Kaylor,

Secretary.

[FR Doc. 80-28192 Filed 9-11-80; 8:45 am]

BILLING CODE 6320-01-M

FEDERAL TRADE COMMISSION

16 CFR Part 13

[Docket No. C-3030]

Bill Crouch Foreign, Inc., d.b.a. Bill Crouch Imports, Inc. (Formerly Mazda of Boulder, Inc.); Prohibited Trade Practices, and Affirmative Corrective Actions

AGENCY: Federal Trade Commission.

ACTION: Final order.

SUMMARY: In settlement of alleged violations of federal law prohibiting unfair acts and practices and unfair methods of competition, this consent order requires, among other things, a Boulder, Colo. retail dealer for new Honda automobiles to cease from charging customers more than its actual cost for transporting vehicles to its showroom; misrepresenting that optional equipment is installed by the manufacturer or required by law; and failing to disclose to customers any additional charges that would be included in the purchase price of the automobile. The order further requires the firm to make refunds, in a prescribed manner, to eligible Honda Accord customers who had paid more than $30.00 above the actual cost for freight; and retain specified records for a period of two years.

DATES: Complaint and order issued July 31, 1980.[1]

FOR FURTHER INFORMATION CONTACT: Paul C. Daw, Director, 6R, Denver Regional Office, Federal Trade Commission, Suite 2900, 1405 Curtis St., Denver, Colo. 80202. (303) 837-2271.

[1] Copies of the Complaint and the Decision and Order filed with the original document.

SUPPLEMENTARY INFORMATION: On Thursday, May 22, 1980, there was published in the Federal Register, 45 FR 34296, a proposed consent agreement with analysis In the Matter of Bill Crouch Foreign Inc., d.b.a. Bill Crouch Imports, Inc. (formerly Mazda of Boulder, Inc.), for the purpose of soliciting public comment. Interested parties were given sixty (60) days in which to submit comments, suggestions or objections regarding the proposed form of order.

No comments having been received, the Commission has ordered the issuance of the complaint in the form contemplated by the agreement, made its jurisdictional findings and entered its order to cease and desist, as set forth in the proposed consent agreement, in disposition of this proceeding.

The prohibited trade practices and/or corrective actions, as codified under 16 CFR Part 13, are as follows: Subpart-Corrective Actions And/Or Requirements: § 13.533 Corrective actions and/or requirements; 13.533-20 Disclosures; 13.533-45 Maintain records; 13.533-55 Refunds, rebates and/or credits. Subpart-Misrepresenting Oneself And Goods—Goods: § 13.1675 Law or legal requirements; § 13.1740 Scientific or other relevant facts. — Prices: § 13.1778 Additional costs unmentioned. Subpart-Neglecting, Unfairly or Deceptively, To Make Material Disclosure: § 13.1882 Prices; 13.1882-10 Additional prices unmentioned; § 13.1895 Scientific or other relevant facts.

(Sec. 6, 38 Stat. 721; (15 U.S.C. 46). Interprets or applies sec. 5, 38 Stat. 719, as amended; (15 U.S.C. 45))

James A. Tobin,

Acting Secretary.

[FR Doc. 80-28128 Filed 9-11-80; 8:45 am]

BILLING CODE 6750-01-M

16 CFR Part 13

[Docket No. C-3033]

Chrysler Corp.; Prohibited Trade Practices, and Affirmative Corrective Actions

AGENCY: Federal Trade Commission.

ACTION: Final order.

SUMMARY: In settlement of alleged violations of federal law prohibiting unfair acts and practices and unfair methods of competition, this consent order requires, among other things, a Highland Park, Mich. manufacturer of motor vehicles to cease failing to notify owners of 1976/1977 Aspens and Volares, purchased or driven in specified states and locales, of the

availability of replacement and reimbursement programs for premature rusting; remove and replace, without charge, the front fender(s) of vehicles that began to experience premature rusting within 36 months-in-service; and reimburse owners of affected vehicles for costs incurred in attempting to correct the premature rusting problem. The manufacturer is further required to notify dealers, in writing, of the existence of premature rusting; supply them with an adequate supply of replacement parts; and inform them of the firm's obligations under the terms of the order.

DATE: Complaint and order issued August 12, 1980.[1]

FOR FURTHER INFORMATION CONTACT: Paul E. Eyre, Director, 4R, Cleveland Regional Office, Federal Trade Commission, Suite 500-Mall Building, 118 St. Clair Ave., Cleveland, Ohio 44114, (216) 522-4207.

SUPPLEMENTARY INFORMATION: On Monday, April 28, 1980, there was published in the Federal Register, 45 FR 28154, a proposed consent agreement with analysis In the Matter of Chrysler Corporation, a corporation, for the purpose of soliciting public comment. Interested parties were given sixty (60) days in which to submit comments, suggestions or objections regarding the proposed form of order.

Comments were filed and considered by the Commission. The Commission has ordered the issuance of the complaint in the form contemplated by the agreement, made its jurisdictional findings and entered its order to cease and desist, as set forth in the proposed consent agreement, in disposition of this proceeding.

The prohibited trade practices and/or corrective actions, as codified under 16 CFR Part 13, are as follows: Subpart-Corrective Actions And/Or Requirements: § 13.533 Corrective actions and/or requirements; 13.533-20 Disclosures; 13.533-45 Maintain records; 13.533-55 Refunds, rebates and/or credits. Subpart-Delaying or Withholding Corrections, Adjustments. or Action Owed: § 13.675 Delaying or withholding corrections, adjustments or action owed.

(Sec. 6, 38 Stat. 721; (15 U.S.C. 46). Interprets or applies sec. 5, 38 Stat. 719, as amended; (15 U.S.C. 45))

James A. Tobin,

Acting Secretary.

[FR Doc. 80-28127 Filed 9-11-80; 8:45 am]

BILLING CODE 6750-01-M

[1] Copies of the Complaint and the Decision and Order filed with the original document.

16 CFR Part 13

[Docket No. C-3034]

Darvel, Inc.; Prohibited Trade Practices, and Affirmative Corrective Actions

AGENCY: Federal Trade Commission.

ACTION: Final order.

SUMMARY: In settlement of alleged violations of federal law prohibiting unfair acts and practices and unfair methods of competition, this consent order requires, among other things, a Bellgarden, Calif., manufacturer and distributor of wearing apparel and related accessories to cease fixing or otherwise controlling the resale prices at which its products are sold or advertised; seeking the identity of dealers who fail to adhere to suggested resale prices and sales periods; and taking any adverse action against them. Respondent is barred from restricting the lawful use of brand names and trademarks in the advertising and sale of its products, and from granting any consideration, service or benefit to any dealer because of the resale price that another dealer has advertised or sold a product. Additionally, the order prohibits the firm from suggesting retail prices for its products for a period of one year.

DATE: Complaint and order issued August 12, 1980.[1]

FOR FURTHER INFORMATION CONTACT: Robert B. Greenbaum, Director, 9R, San Francisco Regional Office, Federal Trade Commission, 450 Golden Gate Ave., San Francisco, Calif. 94102, (415) 556-1270.

SUPPLEMENTARY INFORMATION: On Thursday, May 22, 1980, there was published in the Federal Register, 45 FR 34291, a proposed consent agreement with analysis In the Matter of Darvel, Inc., a corporation, for the purpose of soliciting public comment. Interested parties were given sixty (60) days in which to submit comments, suggestions or objections regarding the proposed form of order.

No comments having been received, the Commission has ordered the issuance of the complaint in the form contemplated by the agreement, made its jurisdictional findings and entered its order to cease and desist, as set forth in the proposed consent agreement, in disposition of this proceeding.

The prohibited trade practices and/or corrective actions, as codified under 16 CFR Part 13, are as follows: Subpart—Coercing and Intimidating: § 13.350 Customers or prospective customers. Subpart—Combining or Conspiring: § 13.395 To control marketing practices and conditions; §13.425 To enforce or bring about resale price maintenance; § 13.430 To enhance, maintain or unify prices; § 13.470 To restrain or monopolize trade; § 13.497 To terminate or threaten to terminate contracts, dealings, franchises, etc. Subpart—Corrective Actions and/or Requirements: § 13.533 Corrective actions and/or requirements; 13.533-20 Disclosures. Subpart—Cutting Off Supplies or Service: § 13.610 Cutting off supplies or service; § 13.655 Threatening disciplinary action or otherwise. Subpart—Maintaining Resale Prices: § 13.1145 Discrimination; 13.1145-5 Against price cutters; 13.1145-45 In favor of price maintainers; § 13.1150 Penalties; § 13.1165 Systems of espionage; 13.1165-80 Requiring information of price cutting.

(Sec. 6, 38 Stat. 721 (15 U.S.C. 46.) Interprets or applies sec. 5, 38 Stat. 719, as amended (15 U.S.C. 45))

James A. Tobin,

Acting Secretary.

[FR Doc. 80-28128 Filed 9-11-80; 8:45 am]

BILLING CODE 6750-01-M

[1] Copies of the Complaint and the Decision and Order filed with the original document.

16 CFR Part 13

[Docket No. 9016]

Herbert R. Gibson, Sr., et al.; Prohibited Trade Practices, and Affirmative Corrective Actions

AGENCY: Federal Trade Commission.

ACTION: Modifying order.

SUMMARY: This order, granting in part, and denying in part, respondents' petitions for reconsideration modifies the order issued on April 30, 1980 (45 FR 38352), by inserting the word "while" before the word "acting," in paragraph 1, line 2 of Section II; and by inserting a comma and the phrase "while acting as a buyer or acting for or in behalf of or subject to the direct or indirect control of a buyer," after the word "respondent[s]," in paragraph 2, line 3 of Section II.

DATES: Final order issued April 30, 1980. Modifying Order issued August 8, 1980.[1]

FOR FURTHER INFORMATION CONTACT: Juereta P. Smith, Director, 5R, Dallas Regional Office, Federal Trade Commission, 2001 Bryan St., Suite 2665, Dallas, Texas 75201. (214) 767-0032.

SUPPLEMENTARY INFORMATION: In the Matter of Herbert R. Gibson, Sr., et al.

[1] Copies of the Modifying Order and Opinion filed with the original document.

The prohibited trade practices and/or corrective actions, as codified under 16 CFR Part 13, appearing at 45 FR 38352, remains unchanged.

(Sec. 6, 38 Stat. 721; (15 U.S.C. 46). Interpret or apply sec. 5, 38 Stat. 719, as amended; sec. 2, 49 Stat. 1526; (15 U.S.C. 45, 13))

The Order Granting In Part, and Denying In Part, Respondents' Petitions for reconsideration, is as follows:

Order Granting in Part, and Denying in Part, Respondents' Petitions for Reconsideration

An opinion and final order in this matter having been issued on April 30, 1980; respondents having been served by mail with the said opinion and order on May 20, 1980 and May 21, 1980; respondents having petitioned for reconsideration of said opinion and order on June 12, 1980; and the Commission, for the reasons stated in the accompanying opinion, having determined to grant in part, and deny in part, respondents' petitions for reconsideration;

It is ordered, That the final order to cease and desist be, and hereby is, modified as follows:

In paragraph 1 of Section II of the Order, line 2, insert the word "while" in front of the word "acting"; and

In paragraph 2 of Section II of the Order, line 3, after the word "respondent[s]," insert a comma and the phrase "while acting as a buyer or acting for in behalf of or subject to the direct or indirect control of a buyer,".

By the Commission.

James A Tobin,

Acting Secretary.

[FR Doc. 80-28125 Filed 9-11-80; 8:45 am]

BILLING CODE 6750-01-M

SECURITIES AND EXCHANGE COMMISSION

17 CFR Part 240

[Release Nos. 33-6239; 34-17120; and IC-11336]

Tender Offers

AGENCY: Securities and Exchange Commission.

ACTION: Final rule.

SUMMARY: The Commission announces the adoption of a new anti-fraud rule establishing a "disclose or abstain from trading rule" for any person who is in possession of material information that relates to a tender offer by another person which information he knows or has reason to know is nonpublic and was acquired, directly or indirectly, from that person or the issuer of the securities subject to the tender offer. The rule also contains exceptions pertaining to multi-service financial institutions and brokerage transactions. In addition, as a means reasonably designed to prevent fraudulent, deceptive, or manipulative acts or practices, the rule establishes an "anti-tipping" rule with respect to material, nonpublic information relating to a tender offer. The provision implements existing statutory requirements and will be applicable to any tender offer. This action is necessary and appropriate in the public interest and for the protection of investors because of the current abuses in tender offer practice and the detrimental effects which such trading has on shareholders and securities markets in the context of tender offers.

EFFECTIVE DATE: October 14, 1980.

FOR FURTHER INFORMATION CONTACT: Prior to the effective date of the rule contact John J. Huber or W. Scott Cooper (202-272-2589), Office of Disclosure Policy; thereafter, contact Joseph G. Connolly, Jr., (202-272-3097), Office of Tender Offers, Division of Corporation Finance, Securities and Exchange Commission, 500 North Capitol Street, Washington, D.C. 20549.

SUPPLEMENTARY INFORMATION: The Securities and Exchange Commission today announced the adoption of Rule 14e-3 under Regulation 14E [1] pursuant to Sections 14(e) and 23(a) of the Securities Exchange Act of 1934 (the "Exchange Act") [15 U.S.C. 78a et seq. (1976 and Supp. I 1977)]. The rule pertains to trading by persons in securities which may be the subject of a tender offer as well as tipping of material, nonpublic information relating to a contemplated tender offer. It should be noted that the rule applies only in the context of tender offers. Persons subject to the provisions of Rule 14e-3 may also be subject to other provisions of the federal securities laws. Moreover, good business judgment and industry standards may require persons subject to the provisions of Rule 14e-3, particularly broker-dealers, to perform acts and to implement policies and procedures beyond the minimum standards necessary to avoid liability under Rule 14e-3.

Rule 14e-3(a) establishes a "disclose or abstain from trading" rule under the Williams Act. A person who is in possession of material information that relates to a tender offer by another person which information he knows or has reason to know is nonpublic and which he also knows or has reason to know was acquired directly or indirectly from a person who has taken a substantial step or steps to commence or has commenced a tender offer (hereinafter also referred to as the "offering person"), the issuer whose securities are subject to the tender offer or any officer, director, partner or employee or any other person acting on behalf of the offering person or the issuer would be subject to the restrictions of the new rule. Any person subject to the rule would be prohibited from purchasing or selling or causing the purchase or sale of the securities to be sought or being sought in the tender offer unless, within a reasonable period of time prior to the purchase or sale, the information and its source are publicly disclosed.

Rule 14e-3(b) provides that certain transactions by multi-service financial institutions under certain circumstances which would otherwise be proscribed will not violate Rule 14e-3(a). This exception is available for purchases or sales by multi-service institutions where the institution can show that the individuals making the investment decision did not know the information and that the institution has established policies and procedures, reasonable under the circumstances, to ensure that individual decision maker(s) would not violate Rule 14e-3(a).

Rule 14e-3(c) provides that certain transactions which would otherwise be proscribed will not violate Rule 14e-3(a). These exceptions include: (1) the execution by a broker or another agent on behalf of the offering person; and (2) sales by any persons to the offering person.

Rule 14e-3(d) is designed to prevent leaks of material, nonpublic information relating to a tender offer. Rule 14e-3(d) provides that, as a means reasonably designed to prevent fraudulent, deceptive or manipulative acts or practices within the meaning of Section 14(e), it shall be unlawful for certain specified persons to communicate such information to persons under circumstances in which it is reasonably foreseeable that such communication is likely to result in a violation of Rule 14e-3. An exception to the rule provides that a communication made in good faith to certain other persons involved in the planning, financing, preparation or execution of the tender offer, to the issuer and certain affiliated persons or to any person pursuant to applicable statute will not violate Rule 14e-3(d).

[1] Regulation 14E [17 CFR 240.14e-1 through 17 CFR 240.14e-3] is applicable to any tender offer other than one involving exempted securities and includes provisions relating to the length of the tender offer and extensions thereof, the payment of consideration offered, and the disclosure of the subject company's position with respect to the tender offer.

Rule 14e-3(a) does not proscribe purchases or sales of securities to be sought or sought in a tender offer by the person who has taken a substantial step or steps to commence or has commenced the tender offer.[2] The offering person will be subject to liability, however, under Rule 14e-3(d) if he tips, *i.e.*, communicates material, nonpublic information relating to a tender offer to someone under circumstances in which it is reasonably foreseeable that he may violate Rule 14e-3. Persons other than the offering person will also be subject to liability for tipping under Rule 14e-3(d).

Rule 14e-3 is the result of a Commission proceeding which began in February 1979 with the publication of a proposed rule which would have proscribed any purchase of subject company securities by any person, other than a bidder, who was in possession of nonpublic information received directly or indirectly from a bidder that the bidder would make a tender offer for the subject company securities, unless prior to the purchase the person publicly announced the information received and its source (the "February proposal").[3] Based on the comments received on the February proposal, proposed Rule 14e-3 was published for comment as part of a package of tender offer proposals in November 1979 (the "November proposals").[4] Rule 14e-3, as adopted, is based primarily on the November proposal, the seventeen letters of comment received [5] and the Commission's experience.

This release contains a discussion of the background for Rule 14e-3 and a synopsis. While the synopsis is intended to assist in a better understanding of Rule 14e-3, attention is directed to the provisions of the rule itself for a more complete understanding.

I. Background

Several commentators on proposed Rule 14e-3 expressed the view that the Commission should not adopt any rule regulating trading on material, nonpublic information relating to a tender offer until after the Supreme Court had rendered its decision in *Chiarella* v. *United States*.[6] These commentators suggested the *Chiarella* decision might either make the proposed rule superfluous or raise questions concerning the Commission's authority to adopt such a rule. The Supreme Court decided *Chiarella* on March 18, 1980. In the Commission's view, that decision has had neither of the suggested effects.

The *Chiarella* case arose from a series of securities transactions by an employee of a financial printer. On the basis of confidential information obtained in the course of his employment, Mr. Chiarella deduced the identities of various companies that were to be the subject of tender offers that had not yet been publicly announced. Without disclosing the fact of the impending tender offers, Mr. Chiarella purchased target securities and then sold them at a profit immediately after the tender offers were made public..

In the U.S. District Court for the Southern District of New York,[7] Mr. Chiarella was convicted of a criminal violation of Section 10(b) and Rule 10b-5 [17 CFR 240.10b-5]. The U.S. Court of Appeals for the Second Circuit affirmed the conviction and held that he was a "market insider" because of his regular access to market information, and, therefore, was barred from trading on the basis of material, nonpublic information obtained in that capacity.[8] The Second Circuit also found that his actions were fraudulent because he misappropriated the information used in trading.

The Supreme Court reversed the Second Circuit's decision and held "that a duty to disclose under Section 10(b) does not arise from the mere possession of nonpublic market information." [9] The Court, however, did not reach the question of whether Mr. Chiarella violated Section 10(b) and Rule 10b-5 by trading while in possession of material, nonpublic information that he had misappropriated [10] or that he had used or obtained by unlawful means.[11] The Court concluded that this basis for liability had not been properly charged to the jury.

Notwithstanding its conclusion, the Court in its opinion clearly indicated that insiders and their tippees continue to be liable under Rule 10b-5 when they trade on material, nonpublic inside information.[12] The Court not only cited the Second Circuit's decision in *SEC* v. *Texas Gulf Sulphur Co.*[13] but also cited with approval the Commission's administrative decision in *Cady, Roberts & Co.*,[14] in which it articulated the duty of insiders to disclose material, nonpublic inside information or to abstain from trading.[15] In that proceeding, the Commission emphasized that such a duty arose both from the existence of a relationship affording access to inside information intended to be available only for a corporate

---

[2] The Commission had published for comment a proposed rule which would have prohibited the purchase of subject company securities by a bidder which had determined to make a tender offer therefor but had not yet publicly announced its intention to do so unless prior to any such purchase the bidder made a public announcement of certain information. *See* proposed Rule 14e-2(c), Release No. 34-15548 (February 5, 1979) (44 FR 9956). As noted in Release No. 34-16384 (November 29, 1979) (44 FR 70326, 70338), the Commission continues to be concerned by such purchases by bidders and is still considering the wisdom of adopting such a rule. In any event, the adoption of Rule 14e-3 should not be construed as relating in any way to the Commission's authority to regulate the conduct of a bidder under Section 10(b) or Section 14(e) of the Exchange Act or as an indication that the Commission may not act to bar such purchases in the future.

[3] Release No. 34-15548 (February 5, 1979) (44 FR 9956). As more fully discussed in Release No. 34-16385 (44 FR 70349), the Commission did not adopt proposed Rule 14e-2 due in part to the concern that the scope of proposed Rule 14e-2(a) was not sufficiently broad to reach certain aspects of the misuse of material, nonpublic information relating to a tender offer.

[4] Release No. 34-16385 (November 29, 1979) (44 FR 70349). The November proposals also included: a definition of the term "tender offer"; provisions requiring equal treatment of all security holders in the context of a tender offer; a prohibition of certain purchases not made by means of a tender offer; and general and specific inquiries. While Rule 14e-3 has been adopted separately from the other November proposals, it should be particularly noted that the remaining proposals have not been withdrawn. The Commission presently anticipates that further rulemaking action will be undertaken with respect to these proposals.

[5] Of the 39 letters submitted in response to the Commission's request for comment on the November proposals, 17 comment letters specifically addressed proposed Rule 14e-3 and related inquiries. These 17 commentators may be categorized as follows: law firms and associations (7); securities industry (4); corporations (3); trade organizations and associations (2); and individuals (1). Copies of the 39 letters, as well as the summary of comments prepared by the Commission staff with respect to proposed Rule 14e-3, are available for public inspection and copying at the Commission's Public Reference Room (File No. S7-812).

[6] —— U.S. ——, 100 S. Ct. 1108 (1980). The comment period for proposed Rule 14e-3 expired on February 15, 1980, before the *Chiarella* decision was handed down.

[7] *U.S.* v. *Chiarella*, 450 F. Supp. 95 (S.D.N.Y. 1978).

[8] *Chiarella* v. *U.S.*, 588 F.2d 1358, 1365 (2d Cir. 1978).

[9] —— U.S. at ——, 100 S. Ct. at 1118. Thus, the Court only examined whether Chiarella was under a duty to make certain disclosures prior to trading where he had remained silent. The Court's analysis in *Chiarella* does not alter existing standards of liability under Section 10(b) and Rule 10b-5 in cases where the defendant has made affirmative statements in connection with the purchase or sale of a security.

[10] *See* —— U.S. at ——, 100 S. Ct. at 1119 n. 21.

[11] *See* —— U.S. at ——, 100 S. Ct. at 1120-3. (Burger, C. J., dissenting).

[12] The Court in *Chiarella* did not distinguish between corporate and market information where there exists a duty to disclose such information or abstain from trading. Nor does the Commission believe that any such distinction is appropriate, since both corporate and market information may be material to an investment decision. Moreover, Section 10(b) and Rule 10b-5 by their terms do not distinguish between corporate and market information.

[13] 401 F.2d 833 (2d Cir.1968), *cert. denied*, sub nom. *Coates* v. *Securities and Exchange Commission*, 394 U.S. 976 (1969). *See* —— U.S. at ——, 100 S. Ct. at 1115.

[14] 40 S.E.C. 907 (1961).

[15] *See* —— U.S. at ——, 100 S. Ct. at 1113-15.

purpose, and the unfairness of allowing a corporate insider to take advantage of such information by trading without disclosure.[16] In addition, the Court noted without comment that persons have been held liable who receive or learn material, nonpublic information from an insider ("tippees") and who subsequently trade without disclosing such information.[17]

The Court also affirmed its holding in *Affiliated Ute Citizens* v. *United States* [18] that a fiduciary may not trade with its beneficiary while in possession of material information of which the beneficiary is not aware. Thus, persons who possess such information and in whom a purchaser or seller has reasonably reposed trust and confidence with respect to securities transactions are subject to a duty to disclose that information or to abstain from trading with such purchaser or seller.[19]

As noted, the *Chiarella* Court did not resolve whether trading while in possession of material, nonpublic market information misappropriated or obtained or used by unlawful means violates Rule 10b-5. The Commission continues to believe that such conduct undermines the integrity of, and investor confidence in, the securities markets, and that persons who unlawfully obtain or misappropriate material, nonpublic information violate Rule 10b-5 when they trade on such information.[20] Moreover, the decision did not suggest any limitation on the Commission's authority under Section 14(e) to adopt a rule regulating trading while in possession of material, nonpublic information relating to a tender offer.[21]

In view of the potential harm to investors and the securities markets which results from trading on material, nonpublic information,[22] the Commission will continue diligently to discharge its enforcement responsibilities in this area with particular emphasis on corporate insiders and securities professionals involved in tender offers. The Commission and the self-regulatory organizations will continue to monitor insider trading and to investigate allegations of unlawful trading on material, nonpublic information.

The abuses which result from trading in securities by persons in possession of material, nonpublic information are particularly troublesome in the context of tender offers. Such trading was a matter of concern to Congress when it enacted the Williams Act and is of ongoing concern to the Commission in administering the Exchange Act.[23] As more fully discussed in Release No. 34-15548 setting forth the February proposals [24] and in Release No. 34-16385 setting forth the November proposals,[25] the testimony in the Senate and House Hearings on the legislation which became the Williams Act highlighted the market disruption and abusive practices associated with leaks by a bidder relating to a tender offer.[26] During the hearings on the Williams Act amendments in 1970, the issue of trading on material, nonpublic information relating to a tender offer was brought to the attention of Congress in the discussion of the manner in which the Commission would implement its rulemaking authority under Section 14(e).[27]

In 1971, the Commission indicated in its Institutional Investor Study Report that it would consider the possibility of developing appropriate rules to deal with the misuse by institutional investors in the market of undisclosed information concerning corporate takeovers.[28]

The Commission has previously expressed and continues to have serious concerns about trading by persons in possession of material, nonpublic information relating to a tender offer.[29] This practice results in unfair disparities in market information and market disruption.[30] Security holders who purchase from or sell to such persons are effectively denied the benefits of disclosure and the substantive protections of the Williams Act. If furnished with the information, these security holders would be able to make an informed investment decision, which could involve deferring the purchase or sale of the securities until the material information had been disseminated or until the tender offer had been commenced or terminated. Moreover,

---

[16] *See* 40 S.E.C. at 912 and n. 15.

[17] *See* —— U.S. at ——, 100 S. Ct. at 1115. *See, e.g., Shapiro* v. *Merrill Lynch, Pierce, Fenner & Smith*, 495 F.2d 228, 237-38 (2d Cir. 1974).

[18] 406 U.S. 128 (1972).

[19] For example, the Investment Advisers Act of 1940 imposes, in effect, a fiduciary obligation on an investment adviser to its client. *See* §§ 205 & 206 [15 U.S.C. 80b-5 & 80b-6]. Under traditional principles of agency law, a broker owes a fiduciary duty to its customer which is defined by the scope of the agency relationship. *See, e.g.*, N. Wolfson, R. Phillips & T. Russo, *Regulation of Brokers, Dealers and Securities Markets* ¶ 2.03 (1977). In addition, in appropriate circumstances, a dealer has been held to owe a fiduciary obligation to its customer. *See Charles Hughes & Co., Inc.* v. *Securities and Exchange Comm'n*, 139 F.2d 434 (2d Cir. 1943), *cert. denied*, 321 U.S. 786 (1944); *Arleen W. Hughes*, 27 S.E.C. 629 (1948); *Chasins* v. *Smith Barney & Co.*, 438 F.2d 1167 (2d Cir. 1970). *See also* Securities Exchange Act Release No. 13662 (June 23, 1977), 42 FR 33510, 33519-33521, in which the Commission discussed the standards of conduct applicable to certain market professionals in connection with publishing Rule 19c-2 for comment.

[20] In view of the limited holding in *Chiarella*, the Commission continues to believe that such trading may violate Rule 10b-5. Accordingly, no inference should be drawn respecting the applicability of Section 10(b) and Rule 10b-5 to such trading from the adoption of Rule 14e-3 under the Exchange Act.

[21] —— U.S. at ——, 100 S. Ct. at 1117-18.

[22] *See* discussion at notes 29-32, *infra*.

[23] The Commission has instituted numerous civil injunctive actions alleging violations of Section 10(b) of the Exchange Act and Rule 10b-5 thereunder by persons trading in subject company securities while in possession of material, nonpublic information prior to the public announcement of a tender offer. *See, e.g., S.E.C.* v. *Hall*, No. 80-0504, filed Feb. 22, 1980 (D.D.C.), Lit. Rel. No. 9013 (special counsel to issuers making tender offers for their own stock purchased stock before the tender offers were announced); *S.E.C.* v. *Lopata*, No. 80-0274, filed Jan. 29, 1980 (D.D.C.), Lit. Rel. No. 8985 (chairman of the board of directors of subject company tipped brother who purchased subject company stock before the tender offer was announced); *S.E.C.* v. *Fike*, No. 79 Civ. 4434, filed Aug. 23, 1979 (S.D.N.Y.), Lit. Rel. No. 8851 (secretary for director of subject company purchased subject company stock before the tender offer was announced); *S.E.C.* v. *Wright*, No. 79-1981 filed July 30, 1979 (D.D.C.), Lit. Rel. No. 8829 (director of subject company purchased subject company stock before an announcement that management supported tender offer by third party was made); *S.E.C.* v. *Hechler*, No. 79-1729, filed July 5, 1979 (D.D.C.), Lit. Rel. No. 8811 (consultant to bidder and his brother-in-law purchased subject company securities before the tender offers were announced); *S.E.C.* v. *Lockwood*, No. 79 Civ. 0245, filed Jan. 16, 1979 (S.D.N.Y.), Lit. Rel. No. 8646 (vice-president of bidder purchased subject company stock before the tender offer was announced); *S.E.C.* v. *Stone*, No. 78 Civ. 4259, filed Sept. 11, 1978 (S.D.N.Y.), Lit. Rel. No. 8527 (employee of bidder who was inadvertent tippee—"eavesdropper"—purchased subject company stock before the tender offer was announced).

[24] 44 FR 9956, 9976-9979.

[25] 44 FR 70349, 70352-70355.

[26] *See, e.g.*, Hearings on S. 510 Before the Subcomm. on Securities of the Senate Comm. on Banking and Currency, 90th Cong., 1st Sess. 69 *passim* (1967).

[27] During his testimony at the Senate hearings, then Chairman Budge was asked by Senator Williams to give the committee some examples of fraudulent, deceptive or manipulative practices used in tender offers which would be prevented by the rulemaking authority to be granted to the Commission under the proposed amendment to Section 14(e) of the Exchange Act. Hearings on S. 3431 and S. 336 Before the Subcomm. on Securities of the Senate Comm. on Banking and Currency, 91st Cong., 2d Sess. 11 (1970). In response to this specific request, a memorandum from the Commission's Division of Corporation Finance was submitted for the record. Among the "problem areas" enumerated by this memorandum which the staff proposed to deal with by rulemaking authority under Section 14(e), as amended, was the situation in which [t]he person who has become aware that a tender offer is to be made, or has reason to believe that such bid will be made, may fail to disclose material facts with respect thereto to persons who sell him securities for which the tender bid is to be made. *Id.* at 12.

[28] Institutional Investor Study Report of the Securities and Exchange Commission, H.R. Doc. No. 92-64, 92d Cong., 1st Sess. XXXIII (Comm. Print 1971).

[29] Release Nos. 34-15548 and 34-16385.

[30] Such purchases may result in rapid and unexplained price and volume movements in the subject company's and the bidder's securities.

the Williams Act was designed to avert a "stampede effect" in the context of tender offers [31] and the trading on material, nonpublic information and the dissemination of leaks and rumors in connection with such trading tends to promote this detrimental effect.

In view of the continue trading and potential for trading by persons while in possession of material, nonpublic information relating to tender offers and the detrimental impact which such trading has on tender offer practice, shareholder protection and the securities markets, the Commission has determined that Rule 14e-3 is necessary and appropriate in the public interest and for the protection of investors.[32] As adopted, Rule 14e-3 pertains to both the person who receives the information, the tippee, and the person who transmits the information, the tipper.

II. Synopsis of Rule

A. Rule 14e-3(a)

Like the November proposal, Rule 14e-3(a) imposes a duty of disclosure under Section 14(e) on any person who trades in securities which will be sought or are being sought in a tender offer while that person is in possession of material information which he knows or has reason to know is nonpublic and has been acquired directly or indirectly from the offering person, from the issuer or from an officer, director, partner or employee or any other person acting on behalf of the offering person or the issuer. Since no duty to disclose would arise if a person subject to the rule does not purchase or sell or cause the purchase or sale of such securities while in possession of such information, the rule establishes a specific duty to "disclose or abstain from trading" under Section 14(e). The "disclose or abstain from trading" framework of Rule 14e-3(a) is similar to the approach taken in *Texas Gulf* and *Cady, Roberts* which the *Chiarella* Court cited with approval. In the Commission's view this framework is the least restrictive method of regulating this abusive practice.

In order to avoid the prohibition on trading, there must be public disclosure within a reasonable time prior to any such purchase or sale. This public disclosure may be made by the person who has acquired information subject to the prohibition or by another person. As with the earlier proposals, the Commission does not believe that electing to make the public disclosure required by Rule 14e-3(a) prior to trading would be a defense for a breach of duty owed by such person under a contractual or fiduciary relationship with the offering person or the issuer. When such contractual or fiduciary relationships exist, abstention from trading may be the only alternative available to persons in possession of material, nonpublic information which will be both lawful and not in breach of the relationships.

1. *Operation of Rule 14e-3(a).* The "disclose or abstain from trading" duty of Rule 14e-3(a) will arise if the following elements are present:

(a) If any person has taken a substantial step or steps to commence [33] or has commenced a tender offer and another person [34] is in possession of material information relating to such tender offer; [35]

(b) which information the other person knows or has reason to know [36] is nonpublic;

(c) which information the other person knows or has reason to know has been acquired directly or indirectly from the offering person, from the issuer of the securities sought or to be sought in such tender offer or from an officer, director, partner or employee or any other person acting on behalf of the offering person or the issuer; [37] and

(d) the other person purchases or sells or causes the purchase or sale [38] of any security to be sought or sought in such tender offer, or any other security convertible into or exchangeable for such security or any option or right to obtain or to dispose of such securities.[39]

As adopted, the information which will trigger the operation of the Rule (1) must be material, (2) must relate to a tender offer, (3) must be nonpublic and (4) must have been acquired directly or indirectly from the offering person, from the issuer or from another specified person. For the last two requisites, there is a "knows or has reason to know" standard by the person who has possession of the information. For the first two requisites, *i.e.*, materiality and relation to a tender offer, there is no

---

[31] *Rondeau* v. *Mosinee Paper Co.*, 422 U.S. 49, 58 n. 8 (1975).

[32] In addition, the Commission will continue to consider additional regulatory initiatives in the area of trading on material, nonpublic information.

[33] Unlike the November proposal, which was triggered by the determination by the bidder to make a tender offer, Rule 14e-3(a) is triggered by any person taking a substantial step or steps to commence a tender offer. Thus, the prohibition of Rule 14e-3(a) will apply to the period from the accomplishment by the offering person of a substantial step or steps to commence a tender offer to the termination of the tender offer. This provision addresses the commentators' concern with the difficulty of identifying when a person has actually determined to make a tender offer by replacing that standard with the one in the rule as adopted. The Commission believes that, although this standard is not totally objective, it provides a reasonable basis to identify when the prohibition of Rule 14e-3(a) would apply.

The Commission believes that a substantial step or steps to commence a tender offer include, but are not limited to, voting on a resolution by the offering person's board of directors relating to the tender offer; the formulation of a plan or proposal to make a tender offer by the offering person or the person(s) acting on behalf of the offering person; or activities which substantially facilitate the tender offer such as: arranging financing for a tender offer; preparing or directing or authorizing the preparation of tender offer materials; or authorizing negotiations, negotiating or entering into agreements with any person to act as a dealer manager, soliciting dealer, forwarding agent or depository in connection with the tender offer.

[34] This person is someone other than the offering person, or in the case of an issuer tender offer, the issuer.

[35] Like the November proposal, Rule 14e-3(a) pertains to any material, nonpublic information relating to a tender offer. Therefore, this element would include information prior to the commencement of a tender offer, such as the intention to make a tender offer, as well as such information during a tender offer such as the withdrawal of a tender offer or an increase in the consideration being offered to security holders.

[36] In light of the comments received, the "knows or has reason to believe" standard embodied in the November proposal was replaced with a "knows or has reason to know" standard. This revision should not be construed to indicate that the person who trades or causes a transaction does not necessarily have a duty of inquiry with respect to the information and its source.

[37] Unlike the November proposal which focused on information directly or indirectly received from the bidder, Rule 14e-3(a) differs in two respects. First, it provides that the other person knows or has reason to know that he has directly or indirectly acquired the information. Thus, information received as well as information obtained by conversation, misappropriation and other means is included in the term "acquired." Second, the information may be acquired from the offering person, from the subject company or from an officer, director, employee or partner or any other person acting on behalf of the offering person or the issuer. This revision responds to concerns of the commentators that the proposed Rule did not address adequately material, nonpublic information emanating from the subject company. This revision also makes clear that the response to a tender offer by the subject company, including its recommendation to accept or reject the tender offer, is within the purview of Rule 14e-3(a). One result of the revision is that, in circumstances where the subject company or its insiders are the source by which the information is acquired, the duty established by Rule 14e-3(a) may overlap with a similar duty under Rule 10b-5. Thus, the subject company's response to the tender offer would be information from the subject company and would be covered by Sections 14(e) and 10(b) and Rule 10b-5. Since the information must come directly or indirectly from the offering person, from the subject company or from an officer, director, partner or employee or any other person acting on behalf of the offering person or the issuer, Rule 14e-3(a) would not apply if the information comes from an initial source other than such persons.

[38] The meaning of the term "causes" in the context of this Rule includes a recommendation by one person to another person which results in a purchase or sale by the other person.

[39] The November proposal prohibited trading in any security or any option to purchase any security of the subject company. In response to the commentators, the types of securities subject to the trading prohibition has been narrowed. As a result, trading is proscribed only in securities whose market value has a relationship to the security sought or to be sought in the tender offer.

"knows or has reason to know" standard.

In addition, Rule 14e-3(a) applies prior to the commencement of a tender offer as well as after an offer has commenced. Trading while in possession of material, nonpublic information prior to the commencement of a tender offer results in the same abuses and causes the same detrimental effects as trading during a tender offer. Since the scope of Section 14(e) applies to acts or practices "in connection with any tender offer," it was, in the Commission's judgment, intended that conduct prior to the date of commencent as well as during a tender offer be covered.

The operation of Rule 14e-3(a) may be illustrated by examples. It should be emphasized that these examples are not exclusive and do not constitute the only situations in which the duty under Rule 14e-3(a) would arise:[40]

(1) If an offering person tells another person that the offering person will make a tender offer which information is nonpublic, the other person has acquired material, nonpublic information directly from the offering person and has a duty under Rule 14e-3(a).

(2) If an offering person delegates the authority to determine whether such offering person should take a substantial step or steps to commence or should commence a tender offer to an officer, employee, director or partner and such person decides to implement the tender offer, such person will be deemed to have acquired information relating to the tender offer from the offering person and therefore will have a duty under Rule 14e-3(a) to disclose or abstain from trading.

(3) If the offering person sends a nonpublic letter to a subject company notifying the subject company of a proposed tender offer at a specified price and upon specified terms and the management of the subject company learns the contents of the letter, the management of the subject company has acquired material, nonpublic information directly from the offering person. An individual member of such management will violate Rule 14e-3(a) if he purchases or sells or causes the purchase or sale of the securities to be sought in the tender offer.

(4) If, under the facts in the preceding example, the management of the subject company also tells other persons not affiliated with management of the letter, then those other persons have acquired material, nonpublic information indirectly from the offering person and are under a duty to disclose or abstain from trading under Rule 14e-3(a).

(5) If a person receives material information from the subject company relating to its response to another person's tender offer for the subject company's securities, such person will be under a duty to disclose or abstain from trading provided that such person knows or has reason to know the information is nonpublic.

(6) If a person steals, converts or otherwise misappropriates material, nonpublic information relating to a tender offer from an offering person, such person will have acquired the information directly from the offering person and has a duty under Rule 14e-3(a).

(7) If an offering person tells another person of his intention to make a tender offer, and such other person subsequently tells a third person that a tender offer will be made and this third person knows or has reason to know that this non-public information came indirectly from the offering person, then this third person has a duty under Rule 14e-3(a).

2. *Disclosure under Rule 14e-3(a).* A person who triggers the elements of Rule 14e-3(a) discussed above may either refrain from trading in the securities specified or comply with the disclosure requirement of Rule 14e-3(a). The disclosure requirement has two elements: (1) timing of disclosure; and (2) the information and its source. Within a reasonable time prior to such purchase or sale the person must publicly disclose, by press release or otherwise, the information received and its source. The Commission does not believe that this requirement imposes an undue burden of disclosure. Moreover, the Commission emphasizes that the disclosure must be made in a manner which will fully disseminate the information. Various methods are available. These include, but are not limited to, disclosing the information and its source to a national securities exchange on which the class of securities sought or to be sought in the tender offer is listed; to the National Association of Securities Dealers, Inc., if such security is authorized for trading in the NASDAQ interdealer quotation system; a daily newspaper with a national circulation; or a national news service.

In addition, if full and complete disclosure of the information is made by another person, then there is no requirement for duplicative disclosure by a person who would otherwise be required to disclose or abstain from trading. It should be emphasized, however, that the disclosure made by another person must occur within a reasonable time prior to any purchase or sale by the person and that the disclosure must be substantially similar in content to that disclosure which such person would have been required to make under the rule.

B. Rule 14e-3(b)

The abuse at which Rule 14e-3(a) is directed is the actual misuse of material, nonpublic information in connection with a sale or purchase. The Commission recognizes that the rule is capable of being applied to a person that is not a natural person even though the individuals making the investment decision on behalf of such person did not know the material, nonpublic information. This could occur, for example, where one department of a multi-service financial institution received material, nonpublic information relating to a tender offer while a separate and independent department of the same organization made the decision to purchase (or sell) securities of the subject company without any knowledge of such information. In the instance where the prohibition would be applicable to a person other than a natural person, and the individuals making the investment decision did not know the material, nonpublic information, there would be no actual misuse of the information, yet it could be said that the institution was in possession of the information and did purchase or sell in apparent violation of Rule 14e-3(a).

In recognition of this situation, the November proposal contained an exception from the prohibition on trading for a person, which is not a natural person, where the individuals making the investment decision on behalf of that person did not know and did not have access to such material, nonpublic information. The commentators supported the Commission's recognition that an exception was necessary and appropriate for such persons, typically multi-service financial institutions. Many, however, suggested certain changes in the formulation of the exception. In response to the comments received and based on further analysis by the Commission, the exception provided in Rule 14e-3(b) has been revised.[41]

[40] Also, these examples do not illustrate the operation of Rule 14e-3(d). *See* discussion at 34, *infra*.

[41] Rule 14e-3(b) differs from proposed Rule 14e-3(b) in two respects. First, the proposed rule required the institution to prove that the individual making the investment decision did not know and did not have access to the material, nonpublic

Footnotes continued on next page

As adopted, Rule 14e-3(b) provides an exception to the prohibition of Rule 14e-3(a) where an institution or other non-natural person engaged in the securities business can show that the individual decision makers did not know the information and that the institution has implemented one or a combination of reasonable procedures to ensure that such individuals would not violate Rule 14e-3(a).

1. *Elements of the exception.* In order to qualify for the exception in Rule 14e-3(b), a person who is not a natural person must carry the burden of proof for both elements of the exception. First, under Rule 14e-3(b)(1) such person must show that the individual decision maker(s)[42] within the person did not know the information at the time the investment decision was made. Whenever the actual decision maker(s) know [43] the information, the exception is not available whether or not the second element of the exception is satisfied. Second, Rule 14e-3(b)(2) requires that the person must show that it has implemented [44] one or a combination of policies and procedures, reasonable under the circumstances to ensure that individual(s) making investment decision(s) would not violate paragraph (a). These policies and procedures may include but are not limited to (i) those which restrict any purchase, sale and causing any purchase or sale of any security and (ii) those which prevent the individual decision maker(s) from knowing such information.

The neutral approach adopted in Rule 14e-3(b)(2) is intended to provide flexibility to each institution to tailor its policies and procedures to fit its own situation. The policies and procedures which are implemented to satisfy the exception must be reasonable under the facts and circumstances of the person and that person's type of business. Policies and procedures which may be reasonable for one institution may not be reasonable for another institution, even in the same industry. Moreover, the phrase "reasonable under the circumstances" relates to the timing of the policies and procedures—at which point in time they are implemented with respect to material, nonpublic information—as well as to their substance.

Rule 14e-3(b)(2) (i) and (ii) specify certain types of policies and precedures, which are not exclusive. The first type of policies and procedures is the restricted list procedure and the second type refers to policies and procedures often called a "Chinese Wall." There are other informal procedures that some institutions employ when they receive material, nonpublic information, such as "watch lists." The "reasonable under the circumstances" standard may require one or a combination of these policies and procedures to ensure that actual investment decision maker(s) do not violate paragraph (a).

As adopted, the availability of the exception does not depend on the type of multi-service financial institution involved, the departments within the multi-service financial institutions involved or the activities performed by such multi-service financial institutions. This position is consistent with the views of the majority of the commentators who addressed the issue of whether distinctions should be made for different institutions. However, the Commission believes that the type of institution or the particular department within an institution involved and the activities that are engaged in are factors which should be assessed when determining what constitutes reasonable policies and procedures within the circumstances of a particular institution.

2. *Present practices.* The Commission understands that policies and procedures to prevent the use of material, nonpublic information relating to a tender offer as well as other types of information are widely used by multi-service financial institutions. These present practices include the use of so-called "Chinese Walls" which are used to isolate the nonpublic flow of information from one department to the rest of the institution. Depending on the circumstances, it may be appropriate to advise customers of its use of the Chinese Wall, because the institution would not be using all information that it had received to the benefit of a particular customer. There is also a danger that the Chinese Wall may not be fully effective in all instances and that information may pass through the wall. In that regard, other informal procedures are often used in conjunction with and to supplement the Chinese Wall at times when the institution has material, nonpublic information but before the information is appropriate for public release or to cause placement of the security on a restricted list. This "watch list" procedure enables the institution to monitor trading activity to determine whether any leaks in the Chinese Wall have occurred.

Another type of procedure is the restricted list whereby an institution will prohibit recommendations relating to, solicitations of orders to purchase or sell, execution of unsolicited orders to purchase or sell a particular security or any combination of these prohibitions. Most firms are reluctant to place a security on a restricted list until the information is significant and ready to be publicly announced.[45] This reluctance is based upon the perception that a restricted list often operates as a "tip-sheet" for the investment community—immediately signaling that the institution is in possession of material, nonpublic information about the issuer of the stock placed on restriction.

Depending upon the nature of the activities of a particular institution, it may use a Chinese Wall or a restricted list or a combination of these and other procedures. The specific policies and procedures selected by an institution will be those which will be most effective in preventing the misuse of material, nonpublic information.

Footnotes continued from last page information. The separate requirement of proving lack of access was criticized by the commentators, based on the belief that it would be difficult, especially in smaller institutions, to prove that the investment decision maker did not have access to the information and because evidence concerning a lack of access really bears on the question of whether the investment decision maker had actual knowledge. As adopted, Rule 14e-3(b) requires the institution to show that it has implemented reasonable policies and procedures to ensure that individual decision maker(s) would not violate paragraph (a). Second, proposed Rule 14e-3(b) provided that the existence of policies and procedures designed to prevent the misuse of the material, nonpublic information may, depending upon the facts and cricumstances, be taken into account in determining whether the individuals had access. Rule 14e-3(b) provides that Rule 14e-3(a) will not apply if the institution can show that the individual decision maker(s) did not know the information and that the institution had implemented reasonable policies and procedures so that investment decision maker(s) would not violate paragraph (a). This revision addresses the concerns of the commentators that the proposed rule did not indicate whether the existence of policies and procedures would provide a defense to liability under Rule 14e-3(a).

[42] One of the commentators expressed concern over a possible expansive interpretation of the phrase "individual(s) making the investment decision." Only the individual(s) actually involved in the investment decision are covered by the phrase and it does not include individual(s) that have a purely supervisory authority with respect to investment decisions. Thus, an insurance company's Finance Committee which may be charged with ultimate responsibility for supervising investment decisions by that institution but which does not make the actual investment decision would not be considered "individual(s) making the investment decision" under Rule 14e-3(b)(1).

[43] A person attempting to establish the non-availability of the exception may be able after the institution has met the initial burden to show circumstances under which it would not be reasonable to assume that the individual decision maker(s) did not know the information. This evidence may also bear on the effectiveness of the policies and procedures in the second element.

[44] As used in Rule 14e-3(b)(2), the term "implemented" includes the establishment and effective maintenance of the reasonable procedures.

[45] The Commission notes that that information may be material for purposes of Rule 14e-3(a) well in advance of time the security is placed on the restricted list.

The Commission expects that present practices would continue in light of Rule 14e-3(b) and may, in certain instances, be strengthened to ensure the availability of this exception to liability. The Commission will carefully monitor and review the impact that Rule 14e-3(b) has on the present practices.[46] In addition, the Commission believes that Rule 14e-3(b) will not unduly burden the operations of multiservice financial institutions and that the provision is consistent with those of other federal agencies.[47]

In addition to these practices, these institutions in the exercise of sound business judgment and in light of attendant legal responsibilities have instituted policies and procedures which may exceed those required by Rule 14e-3(b). The business judgment aspect involves the perception of the customers of that institution concerning the conduct and practices of the institution. To maintain a high level of customer confidence in the integrity of the institution and the industry in general, the institution may be compelled to institute policies or procedures in addition to those required by Rule 14e-3(b). The Commission anticipates that the adoption of Rule 14e-3(b) will not affect these business judgment decisions.

[46] One such practice that the Commission expects to continue is the practice that a broker dealer does not trade for its own account, such as arbitrage and other proprietary activities, when the broker dealer possesses material, nonpublic information relating to a tender offer. In the Commission's view, the burden of proof with respect to knowledge and the effectiveness of the policies and procedures would be more difficult to sustain if the purchases at issue involve such activities.

[47] By not designating the specific policies and procedures that should be adopted to ensure that the individual decision maker(s) would not violate Rule 14e-3(a), the Commission's approach is consistent with that of the Federal Reserve Board ("Fed") and the Comptroller of the Currency ("Comptroller"). In a policy statement concerning the use of inside information, the Fed stated its judgment that the use of material inside information by any state member bank in connection with any decision or recommendation to purchase or sell securities constitutes an unsafe and unsound banking practice. Those banks which exercise investment discretion for the account of others were then notified to adopt written policies and procedures suitable to its particular circumstances to ensure that such information is not misused [43 FR 12755]. The Comptroller has adopted regulations to require every national bank exercising fiduciary powers to adopt written policies and procedures to ensure that national bank trust departments shall not use material, inside information in connection with any decision or recommendation to purchase or sell any security (12 CFR 9.7(d)). In adopting these requirements, the Comptroller rejected the idea of setting forth the key aspects of these policies and procedures in favor of a flexible approach, whereby each bank would be able to choose those policies and procedures which best suit it [43 FR 6759].

C. Rule 14e-3(c)

Rule 14e-3(c) sets forth two exceptions in addition to that provided by Rule 14e-3(b). The exceptions pertain to purchases of the securities sought or to be sought in the tender offer by brokers or other agents on behalf of an offering person; and to sales of such securities by any person to an offering person.

It should be noted that the scope of the exceptions from liability provided by this paragraph is limited. Rule 14e-3(c) provides an exception for only those persons named in Rule 14e-3(c) and an exception from liability for violations of only Rule 14e-3(a). Rule 14e-3(c) does not have any effect on the duties imposed on an offering person under other provisions of the federal securities laws, such as Rule 10b-13 [17 CFR 240.10b-13]. Rule 10b-13 prohibits an offering person from directly or indirectly purchasing or arranging to purchase certain securities otherwise than pursuant to a tender offer from the time the tender offer is publicly announced or otherwise made known by the offering person until the expiration of the offer. Therefore, if Rule 10b-13 is applicable, the offering person would be unable to purchase the securities notwithstanding that Rules 14e-3(c)(1) or 14e-3(c)(2) will render the provisions of Rule 14e-3(a) inapplicable. In such instances, the transaction would not occur because the offering person would be unable to purchase or arrange for the purchase of the securities.

Rule 14e-3(c)(1) provides that the purchase or purchases of any security described in Rule 14e-3(a) by a broker or by another agent on behalf of an offering person are not violations of Rule 14e-3(a). This exception addresses the concern by some commentators that a broker or other agent making purchases on behalf of an offering person would violate the proposed rule if the offering person disclosed material, nonpublic information to such broker or agent. As adopted, Rule 14e-3(a) applies to any person and since the broker or the offering person's agent is a person within the meaning of paragraph (a), the exception is necessary for the offering person to consummate lawful purchases if the broker or agent acquires material, nonpublic information from the offering person. As noted earlier, this exception does not provide any relief for the offering person from other provisions of the federal securities laws.

Rule 14e-3(c)(2) provides that a sale or sales by any person of any security described in paragraph (a) to the offering person are not in violation of Rule 14e-3(a). This exception permits a person who has received material, nonpublic information from a particular offering person relating to a tender offer to sell securities to that offering person prior to the date of commencement of the tender offer as well as to tender securities to that offering person pursuant to the tender offer and to have those securities accepted for payment by the offering person pursuant to the tender offer. Since the potential for misuse of the information is negligible in these instances, liability is not imposed on the seller in this type of transaction.

The exception in Rule 14e-3(c)(2) is designed to permit the following transactions without a violation of Rule 14e-3(a). In the situation where the offering person acquires the securities of an insider prior to the commencement of a tender offer and the insider is informed of the offering person's nonpublic intention to make a tender offer, then paragraph (a) would prohibit the sale to the offering person by the insider without disclosure. However, the exception in Rule 14e-3(c)(2) would permit the sale by the insider to the offering person. This exception would also permit any person to tender securities to the offering person in the tender offer, where such person knows material, nonpublic information relating to the tender offer, such as an increase in consideration or an extension of the tender offer, without complying with the disclosure requirements of paragraph (a).

D. Rule 14e-3(d)

As discussed earlier, trading on the basis of material, nonpublic information leaked to the market creates disparities in market information and market disruption. This undermines the purposes of the Williams Act since security holders who sell to persons with such material, nonpublic information are effectively denied the benefits of disclosure and the substantive protections provided by the Williams Act.

To address this problem the Commission published for comment proposed Rule 14e-3(c) as part of the November proposals. This proposal focused on the bidder's role in preventing these practices and fostering the achievement of the purposes of the Williams Act. Under proposed Rule 14e-3(c), a person who had determined to make or was making a tender offer or any person acting on behalf of such person would be prohibited from communicating material, nonpublic information relating to such tender offer to any other person if such person knew or had reason to know that the other person was likely to violate proposed

Rule 14e-3(a) by purchasing or selling securities of the subject company. An exception was provided from proposed Rule 14e-3(c) for the communication of material, nonpublic information relating to a tender offer by the person who had determined to make or is making the tender offer to its officers, directors, employees or partners as well as persons included in the planning, financing, preparation or execution of the tender offer in order to implement the tender offer, unless the person who had determined to make or is making the tender offer had evidence that such persons are likely to violate proposed Rule 14e-3(a).

Rule 14e-3(d) is the rule designed to prevent the selective communication of material, nonpublic information relating to a tender offer as contemplated by the November proposals but contains a number of revisions to the proposal. Rule 14e-3(d) is adopted as a means reasonably designed to prevent fraudulent, deceptive or manipulative acts or practices under Section 14(e) in the area of trading on material, nonpublic information relating to a tender offer. Rule 14e-3(d) provides that it shall be unlawful for certain specified persons to communicate material, nonpublic information relating to a tender offer under circumstances in which it is reasonably foreseeable that such communication is likely to result in a violation of Rule 14e-3(a) or Rule 14e-3(d) except that the prohibition shall not apply to a communication made in good faith to certain specified persons: those involved in the planning, financing, preparation or execution of the tender offer; the issuer and certain persons involved in the planning, financing, preparation or execution of the issuer's activities with respect to such tender offer; and any person pursuant to a requirement of any statute or rule or regulation promulgated thereunder.

1. *Operation of Rule 14e-3(d)(1).* Rule 14e-3(d)(1) proscribes the selective communication of certain information by persons described in Rule 14e-3(d)(2). The proscription consists of two elements. First, such person must possess material, nonpublic information relating to a tender offer. Such person may create the information, *e.g.*, the offering person or the subject company, or he may have acquired the information from the offering person or the subject company or from a person who is in a chain from the offering person or the subject company. Second, such person tips the information to another. The tipping occurs where it is reasonably foreseeable that the communication is likely to result in a violation of Rule 14e-3. The standard of reasonably foreseeable is premised on what a reasonable man would view as reasonably foreseeable. This formulation is reasonably related to the objective of preventing trading on the basis of material, nonpublic information because it operates to prohibit leaks which are the source of this information.

The rule is not intended to have an impact on casual and innocently motivated social discourse. The rule applies where the circumstances such as the identity, position, reputation or prior actions of the participants—or other relevant factors—make it reasonably foreseeable that a violation of Rule 14e-3 is likely to occur. Even beyond the reach of the rule, because of the disruptive effect of leaks of material, non-public information relating to tender offers, the Commission urges that persons in possession of such information exercise all due care in communications.

2. *Persons subject to the anti-tipping rule.* Rule 14e-3(d)(2) specifies the persons subject to the proscription of Rule 14e-3(d)(1). These persons may be grouped into two categories. The first category consists of those persons who occupy a certain status such as the offering person, the subject company, or an officer, director, partner or employee or any other person acting on behalf of the offering person or the issuer. The second category consists of tippees of the persons in the status category. As a result, Rule 14e-3(d)(2) would reach intermediate level tippees, regardless of whether they trade on the basis of the information. For example, a person who receives such information from the offering person such as a broker dealer not involved in the tender offer will violate Rule 14e-3 if he communicates such information to another person under circumstances where it is reasonably foreseeable that such other person will trade on the basis of the information or such other person will tip someone else.

3. *Exception to Rule 14e-3(d).* In order not to hinder tender offer practice and to allow both the offering person and the subject company to conduct their affairs without exposure to an unwarranted litigation hazard, the Commission believes that it is necessary to specify an exception to Rule 14e-3(d). On the basis of the exception, Rule 14e-3(d) will not apply to communications by the persons specified in Rule 14e-3(d)(2) to the persons enumerated in Rule 14e-3(d)(1) (i) through (iii), provided that they are made in good faith. The adoption of this exception responds to the concerns of several commentators that a safe harbor be added to assure that the offering person can communicate information to persons involved in the tender offer without violating the proposed rule.

The good faith standard is the critical concept to the availability of the exception and the person claiming the availability of the exception bears the burden of proof in establishing his good faith. If the person who communicates the information knows or has reason to know that the person enumerated in Rule 14e-3(d)(1) (i) through (iii) is going to violate Rule 14e-3, then the exception is not available. The communicator would be a tipper subject to the prohibition of Rule 14e-3(d) and the person who acquires and trades will violate Rule 14e-3(a).

III. Certain Findings

In publishing the November proposals, the Commission specifically invited comments with respect to: (1) whether the costs imposed on bidders, subject companies and/or others by the proposals would outweigh their benefits to investors and the public interest; and (2) whether any proposed rule, if adopted, would have an adverse effect on competition or would impose a burden on competition which is neither necessary nor appropriate in furthering the purposes of the Exchange Act.

The comment letters did not provide any significant basis for concluding that the implementation of the Commission's statutory mandate in the manner proposed would be outweighed by such possible additional costs. Accordingly, the Commission finds that the cost imposed on bidders, subject companies and others by the rule published herein are not unreasonable and are far outweighed by the benefits which will accrue to investors.

As required by Section 23(a)(2) of the Exchange Act, the Commission has specifically considered the impact which the rule published herein will have on competition. The Commission finds that compliance with the rule will not impose any significant burden on competition. In any event, the Commission has determined that any possible competitive burden will be outweighed by, and is necessary and appropriate to achieve, the benefits of the rule to investors.

IV. Text of the Adopted Rule

Accordingly, 17 CFR Part 240 is amended by adding § 240.14e-3 to read as follows:

PART 240—GENERAL RULES AND REGULATIONS, SECURITIES EXCHANGE ACT OF 1934

§ 240.14e-3 Transactions in securities on the basis of material, nonpublic information in the context of tender offers.

(a) If any person has taken a substantial step or steps to commence, or has commenced, a tender offer (the "offering person"), it shall constitute a fraudulent, deceptive or manipulative act or practice within the meaning of section 14(e) of the Act for any other person who is in possession of material information relating to such tender offer which information he knows or has reason to know is nonpublic and which he knows or has reason to know has been acquired directly or indirectly from (1) the offering person, (2) the issuer of the securities sought or to be sought by such tender offer, or (3) any officer, director, partner or employee or any other person acting on behalf of the offering person or such issuer, to purchase or sell or cause to be purchased or sold any of such securities or any securities convertible into or exchangeable for any such securities or any option or right to obtain or to dispose of any of the foregoing securities, unless within a reasonable time prior to any purchase or sale such information and its source are publicly disclosed by press release or otherwise.

(b) A person other than a natural person shall not violate paragraph (a) of this section if such person shows that:

(1) The individual(s) making the investment decision on behalf of such person to purchase or sell any security described in paragraph (a) of this section or to cause any such security to be purchased or sold by or on behalf of others did not know the material, nonpublic information; and

(2) Such person had implemented one or a combination of policies and procedures, reasonable under the circumstances, taking into consideration the nature of the person's business, to ensure that individual(s) making investment decision(s) would not violate paragraph (a) of this section, which policies and procedures may include, but are not limited to, (i) those which restrict any purchase, sale and causing any purchase and sale of any such security or (ii) those which prevent such individual(s) from knowing such information.

(c) Notwithstanding anything in paragraph (a) of this section to contrary, the following transactions shall not be violations of paragraph (a) of this section:

(1) Purchase(s) of any security described in paragraph (a) of this section by a broker or by another agent on behalf of an offering person; or

(2) Sale(s) by any person of any security described in paragraph (a) of this section to the offering person.

(d)(1) As a means reasonably designed to prevent fraudulent, deceptive or manipulative acts or practices within the meaning of section 14(e) of the Act, it shall be unlawful for any person described in paragraph (d)(2) of this section to communicate material, nonpublic information relating to a tender offer to any other person under circumstances in which it is reasonably foreseeable that such communication is likely to result in a violation of this section *except* that this paragraph shall not apply to a communication made in good faith,

(i) To the officers, directors, partners or employees of the offering person, to its advisors or to other persons, involved in the planning, financing, preparation or execution of such tender offer;

(ii) To the issuer whose securities are sought or to be sought by such tender offer, to its officers, directors, partners, employees or advisors or to other persons, involved in the planning, financing, preparation or execution of the activities of the issuer with respect to such tender offer; or

(iii) To any person pursuant to a requirement of any statute or rule or regulation promulgated thereunder.

(d)(2) The persons referred to in paragraph (d)(1) of this section are:

(i) The offering person or its officers, directors, partners, employees or advisors;

(ii) The issuer of the securities sought or to be sought by such tender offer or its officers, directors, partners, employees or advisors;

(iii) Anyone acting on behalf of the persons in paragraph (d)(2)(i) of this section or the issuer or persons in paragraph (d)(2)(ii) of this section; and

(iv) Any person in possession of material information relating to a tender offer which information he knows or has reason to know is nonpublic and which he knows or has reason to know has been acquired directly or indirectly from any of the above.

(Sec. 14(e), sec. 3, 82 Stat. 455; sec. 5, 84 Stat. 455; sec. 13(2), sec. 23, 48 Stat. 901; sec. 203(a), 49 Stat. 704; sec. 8, 49 Stat. 1379; sec. 10, 78 Stat. 580; sec. 18, 89 Stat. 155; 15 U.S.C. 78n(e) 78w(a))

Authority: The Commission hereby adopts Rule 14e-3 (§ 240.14e-3) as part of Regulation 14E (§§ 240.14e-1 through 14e-3) pursuant to Sections 14(e) and 23(a) of the Exchange Act.

By the Commission.

George A. Fitzsimmons,

Secretary.

September 4, 1980.

[FR Doc. 80-28215 Filed 9-11-80; 8:45 am]

BILLING CODE 8010-01-M

DEPARTMENT OF ENERGY

Federal Energy Regulatory Commission

18 CFR Part 284

[Docket No. RM79-34]

Transportation Certificates for Natural Gas for the Displacement of Fuel Oil

August 29, 1980.

AGENCY: Federal Energy Regulatory Commission, DOE.

ACTION: Order granting stay.

SUMMARY: The Federal Energy Regulatory Commission (Commission) hereby adopts an Order Granting Stay. The effect of the Order is to stay the amendment to section 284.206 specified in ordering paragraph (6) of Order No. 30-D until after the Commission issues its order on rehearing of Order No. 30-D. Order No. 30-D extended the Commission's fuel oil displacement program for the nine month period from September 1, 1980 through May 31, 1981. (45 FR 56046, August 22, 1980.)

EFFECTIVE DATE: August 29, 1980.

FOR FURTHER INFORMATION CONTACT:

Robert Platt, Assistant Advisory Counsel, Office of the General Counsel, 825 North Capitol Street, N.E., Washington, D.C. 20426, 202-357-8457, or

Glenn Berger, Office of the General Counsel, 825 North Capitol Street, N.E., Washington, D.C. 20426, 202-357-9036.

Order Granting Stay

Issued August 29, 1980.

On August 21, 1980, Consolidated Edison Company of New York, Inc. (Con Ed), filed a petition pursuant to § 1.7(c) of the Commission's Rules of Practice and Procedure, seeking a stay of Order No. 30-D. Order No. 30-D extended the Commission's fuel oil displacement program for the nine month period from September 1, 1980, through May 31, 1981. Although the extension was for the most part subject to the same terms and conditions as the original Order No. 30, Ordering Paragraph (6) of Order No. 30-D amended § 284.206 to limit the effect of that provision to volumes delivered prior to September 1, 1980. § 284.206 currently provides:

All volumes of natural gas purchased by an eligible user and transported by an interstate pipeline pursuant to this subpart shall not be considered as either a natural gas supply or market in a determination of an interstate pipeline's customer's requirements for present or future allocations of natural gas during periods of natural gas curtailment.

Con Ed intends to file a petition for rehearing alleging that this amendment to § 284.206 is in error. Con Ed alleges that certain of its gas purchase contracts are contingent upon receiving the assurances provided in § 284.206. In order to prevent the possible loss of these supplies to Con Ed while the Commission consideration of its petition for rehearing is pending, a stay of the amendment to § 284.206 will be granted.

The Commission Orders:

The amendment to § 284.206 specified in Ordering Paragraph (6) of Order No. 30-D shall be stayed until after the Commission issues its order on rehearing of Order No. 30-D.

By the Commission. Commissioner Holden voted present.

Kenneth F. Plumb,

Secretary.

[FR Doc. 80-27576 Filed 9-11-80; 8:45 am]

BILLING CODE 6450-85-M

DEPARTMENT OF HEALTH AND HUMAN SERVICES

Food and Drug Administration

21 CFR Parts 74 and 201

[Docket No. 77N-0009]

Color Additives Subject To Certification; FD&C Yellow No. 5; Labeling In Food and Drugs For Human Use; Confirmation of Effective Date and Amendments

AGENCY: Food and Drug Administration.

ACTION: Final Rule.

SUMMARY: This document confirms the effective dates of July 1, 1981 for food and of June 26, 1980 for drugs of regulations requiring the label declaration of FD&C Yellow No. 5. The regulations have been revised in response to objections to those portions that pertain to the use of FD&C Yellow No. 5 in drugs for human use that are administered orally, nasally, vaginally, or rectally. Specifically, sections are revised to state that the labels of drug products that are also cosmetics do not have to include the name "tartrazine" in the declaration of FD&C Yellow No. 5, and a section is revised to state that it applies only to drugs for human use.

EFFECTIVE DATE: The effective dates are confirmed: For foods, July 1, 1981; for drugs, June 26, 1980. Foods and drugs initially introduced or initially delivered for introduction into interstate commerce shall be labeled as set forth in the regulations below on or after these dates.

FOR FURTHER INFORMATION CONTACT:

Foods—Gerad L. McCowin, Bureau of Foods (HFF-334), Food and Drug Administration, 200 C St., SW., Washington, DC 20204, 202-472-5690.

Drugs—Paul O. Fehnel, Bureau of Drugs (HFD-30), Food and Drug Administration, 5600 Fishers Lane, Rockville, MD 20857, 301-443-6490.

SUPPLEMENTARY INFORMATION: A regulation published in the Federal Register of June 26, 1979 (44 FR 37212) added § 201.20 (21 CFR 201.20) to Subpart A of Part 201 (21 CFR Part 201) to require the declaration of the presence of FD&C Yellow No. 5 in certain drugs and amended §§ 74.705, 74.1705, and 101.22 (21 CFR 74.705, 74.1705, and 101.22) to require label declaration of the presence of FD&C Yellow No. 5 in foods and/or drugs.

In response to the order, 15 objections were filed. They came from food, drug, and cosmetic manufacturers, industry associations, and a consumer group. Most of the objections relate to drug labeling. One of the fifteen objections also requested a hearing and is discussed below under objection 5. Because the agency agrees with this objection and has revised the regulation accordingly, the issue of a hearing is moot.

A summary of the objections and FDA's responses follow:

Food-Related Objections

1. One objection, in the form of a citizen petition from the Grocery Manufacturers of America, Inc., (GMA) requested that the abbreviated term "Yellow 5" be permitted on foods. This petition was assigned a color additive petition number, 9CP0147. The petition claimed that manufacturers would conserve 50 percent of the total space required by the label declaration of "FD&C Yellow No. 5."

The agency denied this petition on February 11, 1980, for the following three reasons:

a. The denial was based primarily on the safety considerations involved. Because of the serious, sometimes life-threatening nature of the reaction in those people who are sensitive to the dye, it is extremely important that labeling information enable both the physician responsible for the diagnosis and management of the allergic-type reaction and the consumer with the condition to immediately recognize products containing FD&C Yellow No. 5. The agency considers the need for both physicians and consumers to determine easily that FD&C Yellow No. 5 is synonymous with tartrazine so important that, for drug products, both names are required on the label to ensure easy identification. The simple terminology "Yellow 5" on the label suggested in the petition prevents, or at least impedes, such persons from making this link between tartrazine and FD&C Yellow No. 5 because no compendia list "Yellow 5." Instead, all compendia list the common or usual name "FD&C Yellow No. 5" (e.g., Merck Index, Handbook of Food Additives, Food Chemicals Codex, Colour Index). The two names also have different Chemical Abstract numbers. FD&C Yellow No. 5 is CAS #1934-21-0, while Yellow 5 is CAS #1342-47-8. Further, it is not possible to find a structure, molecular formula, or systematic name under the term "Yellow 5." Although the common or usual name could be changed for FD&C Yellow No. 5, it would take at least a decade for all compendia, registries, and computerized literature files to incorporate this change. Meanwhile, the potential safety hazard would exist.

b. The consumer confusion that would result from foods, drugs, and cosmetics each being labeled differently could further compound this safety problem. The petition would amend the food labels to read "Yellow 5." Drugs will be labeled "FD&C Yellow No. 5 (tartrazine)," and cosmetics are already labeled "FD&C Yellow No. 5." Consumers could easily fail to recognize that, indeed, all three labels represented the same compound.

c. "Yellow 5" is not a unique name. Many other Yellow 5's exist, including Ext. D&C Yellow No. 5, C.I. Acid Yellow 5, C.I. Mordant Yellow 5, C.I. Basic Yellow 5, C.I. Disperse Yellow 5, C.I. Natural Yellow 5, and C.I. Food Yellow 5 (permitted in the United Kingdom).

The common or usual name of the color is "FD&C Yellow No. 5" and, therefore, it should be stated as such on the labels of all food products by the effective date of July 1, 1981.

On March 12, 1980, GMA filed a petition for reconsideration of the denial. This petition was treated as part of the earlier petition (9CP0147). FDA is considering its response. The common or usual name issue will in any case continue to be handled separate from the disclosure regulations under discussion.

2. One objection from an alcoholic beverage manufacturer requested a 3-year transition period to make the label changes on its products. This 3-year period would be the same as that mandated by the Bureau of Alcohol, Tobacco and Firearms for conversion of alcoholic beverage labels to the metric

system. However, an objection from a consumer group argued that the July 1, 1981 effective date was much too long because manufacturers have been aware of the impending change since the proposal of February 4, 1977.

The effective date of July 1, 1981 for food labeling provides a reasonable and sufficient period of time for businesses to use up current stocks of labels and acquire new stocks of labels which include a declaration of the presence of FD&C Yellow No. 5. As discussed in the preamble to the final rule (44 FR 37215; June 26, 1979), the agency is applying the same effective date to a number of regulations requiring labeling changes to avoid the undue economic hardship that a series of label changes might entail. However, the agency cannot further extend this date to 1982 because of the serious health problem involved. Two years' notice (4 years since the proposed rule) is reasonable and adequate for a relatively simple labeling change.

3. One objection requested a ban on the use of FD&C Yellow No. 5 because of the safety problems involved and the data submitted by the Health Research Group in its petition of January 1, 1977, which sought the revocation of the color additive regulations providing for the use of six color additives, including FD&C Yellow No. 5.

The agency rejects this suggestion for the following two reasons:

a. As discussed in the preamble to the final rule (44 FR 37214), there is insufficient data to suggest that a ban of the color is necessary to protect those persons sensitive to FD&C Yellow No. 5. On the contrary, the preponderance of data suggests that a simple label declaration that FD&C Yellow No. 5 is present in a product will be sufficient to protect these individuals.

b. In the Federal Register of November 24, 1978 (43 FR 54990) the agency denied the petition submitted by the Health Research Group because the claims concerning safety problems were not supported by adequate scientific evidence.

4. One objection requested the dual declaration of FD&C Yellow No. 5 (tartrazine) on foods containing the color. It also requested the label declaration of FD&C Yellow No. 5 when packaging material in contact with cheese contains the color.

The agency rejects these suggestions because of the reasons discussed in the preamble to the final rule (44 FR 37214–37215). This objection offered no new data to change the agency's previous conclusions.

Drug Related Objections

5. Several objections requested the agency to exempt drug products which are also cosmetics, particularly antibacterial mouthwashes and fluoride toothpastes, from the requirement that both "FD&C Yellow No. 5" and "tartrazine" appear on the labels of drugs. The objections argued that, as cosmetics, these products already bear labels setting forth their active and inactive ingredients including "FD&C Yellow No. 5." Thus, it was argued, the labeling on these products should be comparable to the labeling of cosmetic products and manufacturers of these drug products that are also cosmetics should not be required to incur the expense of a labeling change when FDA has determined that the current ingredient labeling is adequate for other cosmetic products.

The agency agrees with these objections and has revised the final regulations to exempt mouthwashes and toothpastes that are both drugs and cosmetics from the dual labeling requirement. Section 701.3 (21 CFR 701.3) requires cosmetic products, including drug products that are also cosmetics, to declare the presence of FD&C Yellow No. 5 on their labels by a simple declaration without reference to tartrazine. Different labeling requirements under § 201.20 for the same ingredient in competing products might become a source of confusion for consumers and would impose an inequitable burden on affected products.

6. One objection requested that the final rule be revised by adding the words "for use by man" after the words "drug products" in § 201.20(a) and after the word "drugs" in § 201.20(b). The objection stated that this request would be consistent with statements made in the preamble that the declaration of FD&C Yellow No. 5 is not required on animal drugs, and would eliminate any confusion as to whether the requirements imposed by § 201.20 are intended to apply to drugs for animal use.

As stated in the last paragraph of the preamble to the final rule, the agency is not requiring the label declaration of FD&C Yellow No. 5 in animal feeds and pet foods. The agency, therefore, agrees with this recommendation. Therefore, §§ 74.1705 and 201.20, which deal with the requirements for certification of FD&C Yellow No. 5, are revised accordingly.

7. Several objections requested a change in the effective date requirement for drug products containing FD&C Yellow No. 5. As published, the regulation was effective for drugs initially introduced or initially delivered for introduction into interstate commerce on or after June 26, 1980 or at the next printing of the labeling, whichever occurs first. The objections requested that the requirement for revision "at the next printing" be deleted.

The agency deleted the requirement for labeling revision "at the next printing" in a notice published in the Federal Register of August 3, 1979 (44 FR 45614). This action, requested in a petition from the Pharmaceutical Manufacturers Association, was taken because of unforeseen difficulties in implementing this requirement.

8. One objection requested modification of the words "initially introduced or initially delivered for introduction into interstate commerce" in the effective date for drugs. The objection argued that this wording would require the relabeling of inventories of drugs containing FD&C Yellow No. 5 whose label did not declare its presence after June 26, 1980. The objection stated that this relabeling was unreasonable, costly, and unnecessary, particularly in view of the fact that the effective date for goods is not until July 1, 1981. The objection recommended that the effective date be revised so as to apply to drugs labeled after 1 year from the date of publication of the regulation. Another objection requested that the effective date for drugs be revised to conform to the effective date for foods.

The agency rejects the suggested changes to the effective date. First, the term "labeled" is not sufficiently precise to serve as the basis for an effective date. For example, it may apply when labels are placed on containers, or when containers are placed into another carton or package which itself bears a label. Second, the language "initially introduced or initially delivered for introduction into interstate commerce" is from the Federal Food, Drug, and Cosmetic Act, and is the traditional test applied to violative conduct under the act. Finally, the requirement is reasonable; it has provided manufacturers sufficient time (1 year) to use existing supplies of labeling and to plan for new labeling. The reasonableness of the date is supported by the fact that other firms stated they would have sufficient time to implement the necessary labeling changes if the phrase "at the next printing" was removed from the effective date requirement. The July 1, 1981 effective date for foods was chosen because that date was published in the Federal Register of September 29, 1978 (43 FR

44830) as the uniform effective date for compliance with all food labeling regulations, not just FD&C Yellow No. 5. A mandatory uniform effective date has not been established for drugs, and for reasons detailed in the preamble to the final rule (44 FR 37219), the agency concluded that the requirements for drug products should become effective earlier than those for foods.

9. One objection requested that labels with insufficient space be exempt from the required label statements.

The agency did not include such an exemption in the final rule because the provisions of § 201.10(i) (21 CFR 201.10(i)) already provide such an exemption for all drugs. Section 201.10(i) states that if the label has insufficient space to contain all required information, the information may appear on the carton or other outer container or wrapper provided certain prescribed information, i.e., proprietary name of the drug, established name of the drug, if any, a lot or control number, and name of manufacturer, packer, or distributor of the drug, appear on the container label. If a firm believes it has a product with a label too small to bear all the required information and the label cannot be made larger to accommodate the required information, it is recommended that the firm discuss the need for the exemption with the agency.

10. One objection said it was repetitive and unnecessary to have the FD&C Yellow No. 5 warning statement appear on the label of prescription drugs because it is required to appear on the package insert.

Both prescription drugs and OTC drugs are required to declare on their labels presence of FD&C Yellow No. 5. The package inserts used with prescription drugs are also required to contain a statement warning about the possible allergic-type reactions that FD&C Yellow No. 5 causes in certain susceptible persons. The presence of the warning in a package insert does not abrogate the need for the required label declaration on the drug's container. The primary purpose of requiring a label declaration on prescription drugs is to enable health professionals to readily identify those drug products containing FD&C Yellow No. 5 without opening the package to read the package insert. This purpose can only be met by the required label declaration. The warning appearing in the package insert is intended to inform prescribers and other health professionals of the basis for the label declaration. It is not intended to be a substitute for the label declaration.

11. The agency received an objection from one firm requesting that the warning statement, required in the "Precautions" section of the package insert, be amended to read "This product contains FD&C Yellow No. 5 (tartrazine) which may cause hypersensitivity reaction, including bronchial asthma in patients with a history of aspirin sensitivity." The petition asserted that the statement required by the regulation strongly implies, by the use of the phrase "frequently seen in patients who also have aspirin hypersensitivity" that many people who are aspirin sensitive also show hypersensitivity to tartrazine. Further, the petition stated that because only a small percentage of persons sensitive to aspirin are also sensitized to tartrazine, the statement required by the June 26, 1979 regulation overstates the facts and is misleading.

The agency rejects this requested change in the warning statement. The revision requested is not acceptable because it implies that only patients with known aspirin sensitivity are susceptible to hypersensitivity reactions to tartrazine. Such an implication is incorrect. Reactions to tartrazine have been reported in allergic patients who can take aspirin without incident. Also incorrect is the petitioner's supporting rationale, that "only a relatively small percentage of aspirin-sensitive individuals are also sensitive to tartrazine." Data placed on file with FDA's Hearing Clerk in support of the FD&C Yellow No. 5 proposal show the reported incidence of tartrazine intolerance among patients with known aspirin sensitivity has varied from 5 to 80 percent, depending upon the particular allergic population, the dose of tartrazine, and the criteria used in assessing the effects. Despite imprecise data on incidence, however, the majority of reports indicate that patients who are intolerant of aspirin are likely to have intolerance to certain other chemical substances including azo dyes such as tartrazine. The frequency of cross sensitivity between tartrazine and aspirin has led some experts to advocate routine testing for both substances in asthmatic patients. (Stenius, B. S. M. and M. Lemola, "Hypersensitivity to Acetylsalicylic Acid (ASA) and Tartrazine in Patients with Asthma," *Clinical Allergy*, 6:119–129, 1976.)

12. The agency received two petitions to change the supplemental new drug application requirements providing for the deletion of FD&C Yellow No. 5 and the reformulation of the product with another color additive.

One petition requested that all such changes be permitted to be placed into effect before the agency has approved the supplement. The petition alleged that the ultimate objective of the final rule was to encourage manufacturers to eliminate FD&C Yellow No. 5 from their products, and that the 1 year provided would not be sufficient time for reformulation work, generation of minimal stability data, submission of a supplemental NDA, and approval of the supplement by the FDA. The petition stated that manufacturers should be encouraged to reformulate their products to remove FD&C Yellow No. 5 if regulatory requirements were modified to facilitate the process as requested in the petition.

The second petition requested that the agency stay the effective date of the final rule for any new drug which is the subject of a supplemental new drug application submitted before June 26, 1980 and which provides for the substitution of FD&C Yellow No. 5 with another color additive. This petition pointed out that if a supplemental new drug application providing for the removal of FD&C Yellow No. 5 and its replacement with another color additive were not approved in sufficient time, firms would be faced with the prospect of multiple labeling changes, first to show the presence of FD&C Yellow No. 5 and then, when the supplement is approved, to reflect the new formulation which does without FD&C Yellow No. 5.

The first petition is granted. The objective of the final rule was not to encourage manufacturers to eliminate FD&C Yellow No. 5 from their products, but rather to require its identification, through labeling, where it is used. Nonetheless, the agency does agree with the petitioner that supplements providing for the substitution of FD&C Yellow No. 5 with another approved color additive, or simply the removal of FD&C Yellow No. 5 as an ingredient, should be permitted to be placed into effect at the earliest possible time. Therefore, the agency is advising that no action will be taken against a drug or applicant solely because either of these changes is placed into effect prior to approval of the supplemental new drug application, if the supplement complies with the requirements of § 314.8(e) (21 CFR 314.8(e)). Section 314.8(d) (21 CFR 314.8(d)) provides that certain kinds of changes can be placed into effect by an applicant prior to receipt of a written notice of approval of a supplemental NDA. The agency believes that, if an applicant is going to replace FD&C Yellow No. 5 with another color additive approved for such use, it is a type of change that need not be delayed pending approval of an NDA supplement.

The second petition is denied. The requested stay of effective date would allow some drug products to be marketed for an unspecified time after the present effective date without declaring the color's presence. The agency believes this result would be contrary to the public interest. Nonetheless, insofar as the petition was based upon the agency's requirement that an NDA supplement be approved prior to the initiation of any formulation changes, the petitioner has a positive response because of the agency's decision to permit changes to be made with respect to replacements for FD&C Yellow No. 5 prior to approval of the supplement.

Copies of all objections received and other documents referenced are available for public review at the office of the Hearing Clerk (HFA-305), Food and Drug Administration, Rm. 4-62, 5600 Fishers Lane, Rockville, MD 20857, between 9 a.m. and 4 p.m., under docket number 77N-0009.

Therefore, under the Federal Food, Drug, and Cosmetic Act (secs. 501, 502, 701, 706 (b), (c), and (d), 52 Stat. 1049-1051 as amended, 1055-1056 as amended, 74 Stat. 399-403 (21 U.S.C. 351, 352, 371, 376 (b), (c), and (d))) and under authority delegated to the Commissioner of Food and Drugs (21 CFR 5.1), there being no other objections or requests for a hearing in response to the order of June 26, 1979, the amendments to Parts 74, 101, and 201 promulgated thereby become effective on July 1, 1981 for foods and June 26, 1980 for drugs. Sections 74.705 and 101.22 remain as originally published in the regulation of June 26, 1979. Sections 74.1705 and 201.20 are amended in response to objections received to read as follows:

1. In Part 74, in § 74.1705 by revising paragraph (c) to read as follows:

§ 74.1705 FD&C Yellow No. 5.

* * * * *

(c) *Labeling requirements.* (1) The label of the color additive and any mixtures intended solely or in part for coloring purposes prepared therefrom shall conform to the requirements of § 70.25 of this chapter.

(2) The label of OTC and prescription drug products intended for human use administered orally, nasally, rectally, or vaginally containing FD&C Yellow No. 5 shall specifically declare the presence of FD&C Yellow No. 5 by listing the color additive using the names FD&C Yellow No. 5 and tartrazine. The label shall bear a statement such as "Contains FD&C Yellow No. 5 (tartrazine) as a color additive" or "Contains color additives including FD&C Yellow No. 5 (tartrazine)." The labels of certain drug products subject to this labeling requirement that are also cosmetics, such as: antibacterial mouthwashes and fluoride toothpastes, need not comply with this requirement provided they comply with the requirements of § 701.3 of this chapter.

(3) The labeling required by § 201.100(d) of this chapter for prescription drugs for human use containing FD&C Yellow No. 5 that are administered orally, nasally, vaginally, or rectally shall, in addition to the label statement required under paragraph (c)(2) of this section, bear the warning statement "This product contains FD&C Yellow No. 5 (tartrazine) which may cause allergic-type reactions (including bronchial asthma) in certain susceptible persons. Although the overall incidence of FD&C Yellow No. 5 (tartrazine) sensitivity in the general population is low, it is frequently seen in patients who also have aspirin hypersensitivity." This warning statement shall appear in the "Precautions" section of the labeling.

* * * * *

2. In Part 201, by revising § 201.20 to read as follows:

§ 201.20 Declaration of presence of FD&C Yellow No. 5 in certain drugs for human use.

(a) The label of OTC and prescription drug products intended for human use administered orally, nasally, rectally, or vaginally containing FD&C Yellow No. 5 shall specifically declare the presence of FD&C Yellow No. 5 as a color additive using the names FD&C Yellow No. 5 and tartrazine. The labeling shall bear a statement such as "Contains FD&C Yellow No. 5 (tartrazine) as a color additive" or "Contains color additives including FD&C Yellow No. 5 (tartrazine)." The labels of certain drug products subject to this labeling requirement that are also cosmetics, such as: antibacterial mouthwashes and fluoride toothpastes, need not comply with this requirement provided they comply with the requirements of § 701.3 of this chapter.

(b) The labeling required by § 201.100(d) of this part for prescription drugs for human use containing FD&C Yellow No. 5 that are administered orally, nasally, vaginally, or rectally shall bear the warning statement "This product contains FD&C Yellow No. 5 (tartrazine) which may cause allergic-type reactions (including bronchial asthma) in certain susceptible persons. Although the overall incidence of FD&C Yellow No. 5 (tartrazine) sensitivity in the general population is low, it is frequently seen in patients who also have aspirin hypersensitivity." This warning statement shall appear in the "Precautions" section of the labeling.

Effective dates. The amendments promulgated by the regulation of June 26, 1979, and the amendments set forth above shall be effective as to foods and drugs initially introduced or initially delivered for introduction into interstate commerce on or after the following dates: For foods, July 1, 1981; for drugs, June 26, 1980.

(Secs. 501, 502, 701, 706(b), (c), and (d), 52 Stat. 1049-1051 as amended, 1055-1056 as amended, 74 Stat. 399-403 (21 U.S.C. 351, 352, 371, 376(b), (c), and (d)))

Dated: September 5, 1980.

Joseph P. Hile,

Associate Commissioner for Regulatory Affairs.

[FR Doc. 80-27870 Filed 9-11-80; 8:45 am]

BILLING CODE 4110-03-M

---

21 CFR Part 178

[Docket No. 80F-0033]

Indirect Food Additives: Adjuvants, Production Aids, and Sanitizers; Tris(2,4-Di-Tert-Butylphenyl)Phosphite

AGENCY: Food and Drug Administration.

ACTION: Final rule.

SUMMARY: The Food and Drug Administration (FDA) is amending the food additive regulations to provide for the safe use of tris(2,4-di-*tert*-butylphenyl)phosphite as an antioxidant and/or stabilizer for polybutadiene used in rubber articles intended for repeated use. Ciba-Geigy Corp. petitioned for this use.

DATES: Effective September 12, 1980. Objections by October 14, 1980.

ADDRESS: Written objections to the Hearing Clerk (HFA-305), Food and Drug Administration, Rm. 4-62, 5600 Fishers Lane, Rockville, MD 20857.

FOR FURTHER INFORMATION CONTACT: Mary W. Lipien, Bureau of Foods (HFF-334), Food and Drug Administration, 200 C St., SW., Washington, DC 20204, 202-472-5740.

SUPPLEMENTARY INFORMATION: FDA published a notice in the Federal Register of March 11, 1980 (45 FR 15672) announcing that a food additive petition (FAP OB3492) had been filed by Ciba-Geigy Corp., Ardsley, NY 10502, proposing that § 178.2010 *Antioxidants and/or stabilizers for polymers* (21 CFR 178.2010) be amended to provide for the safe use of tris(2-di-*tert*-

butylphenyl)phosphite as an antioxidant and/or stabilizer for polybutadiene used in rubber articles complying with § 177.2600. FDA has evaluated data in the petition and other relevant material and concluded that § 178.2010 should be amended as set forth below to include the petitioned additive.

The agency has carefully considered the potential environmental effects of this action and has concluded that the action will not have a significant impact on the human environment and that an environmental impact statement is not required. The agency's finding of no significant impact and the environmental assessment may be seen in the office of the Hearing Clerk (HFA-305), Food and Drug Administration, Rm. 4-62, 5600 Fishers Lane, Rockville, MD 20857, between 9 a.m. and 4 p.m., Monday through Friday.

Therefore, under the Federal Food, Drug, and Cosmetic Act (secs. 201(s), 409, 72 Stat. 1784-1788 as amended (21 U.S.C. 321(s), 348)) and under authority delegated to the Commissioner of Food and Drugs (21 CFR 5.1), Part 178 is amended in § 178.2010(b) by inserting a new entry alphabetically in the table, to read as follows:

§ 178.2010 Antioxidants and/or stabilizers for polymers.

* * * * *

(b) * * *

Substances	*Limitations*
* * *	* * *
Tris(2,4-di-*tert*-butylphenyl) phosphite. (CAS Reg. No. 31570-04-4).	For use only at levels not to exceed 0.5 percent by weight of polybutadiene used in rubber articles complying with § 177.2600 of this chapter, provided that the rubber end product contacts foods only of the types identified in categories I, II, IV-B, VI, VII-B, and VIII in table 1, § 176.170(c) of this chapter and only at temperatures not to exceed 150° F.
* * *	* * *

Any person who will be adversely affected by the foregoing regulation may at any time on or before October 14, 1980, submit to the Hearing Clerk (HFA-305), Food and Drug Administration, Rm. 4-62, 5600 Fishers Lane, Rockville, MD 20857, written objections thereto and may make a written request for a public hearing on the stated objections. Each objection shall be separately numbered and each numbered objection shall specify with particularity the provision of the regulation to which objection is made. Each numbered objection on which a hearing is requested shall specifically so state; failure to request a hearing for any particular objection shall constitute a waiver of the right to a hearing on that objection. Each numbered objection for which a hearing is requested shall include a detailed description and analysis of the specific factual information intended to be present in support of the objection in the event that a hearing is held; failure to include such a description and analysis for any particular objection shall constitute a waiver of the right to a hearing on the objection. Four copies of all documents shall be submitted and shall be identified with the Hearing Clerk docket number found in brackets in the heading of this regulation. Received objections may be seen in the above office between the hours of 9 a.m. and 4 p.m., Monday through Friday.

Effective date. This regulation shall become effective September 12, 1980.

(Secs. 201(s), 409, 72 Stat. 1784-1788 as amended (21 U.S.C. 321(s), 348))

Dated: September 3, 1980.

Joseph P. Hile,

Associate Commissioner for Regulatory Affairs.

[FR Doc. 80-27888 Filed 9-11-80; 8:45 am]

BILLING CODE 4110-03-M

21 CFR Parts 436 and 442

CFR Correction

The following are corrections to errors made in Title 21, Parts 300 to 499, revised as of April 1, 1980.

§ 436.105 [Amended]

1. In § 436.105(a) table located on page 249, the item Cefamandole is corrected to read as follows:

Cefamandole	2	1	21	5	A	0.06	37

2. In § 436.105(b) table located on page 251, the item Cefamandole is corrected to read as follows:

*	*	*	*	*	*	*	*
Cefamandole	Not dried		3	1 mg[1]	1 day	1	1.28, 1.60, 2.00, 2.50, 3.12 μg

§ 442.40 [Amended]

3. In § 442.40 the illustration located on page 413 should read as follows:

BILLING CODE 1505-01-M

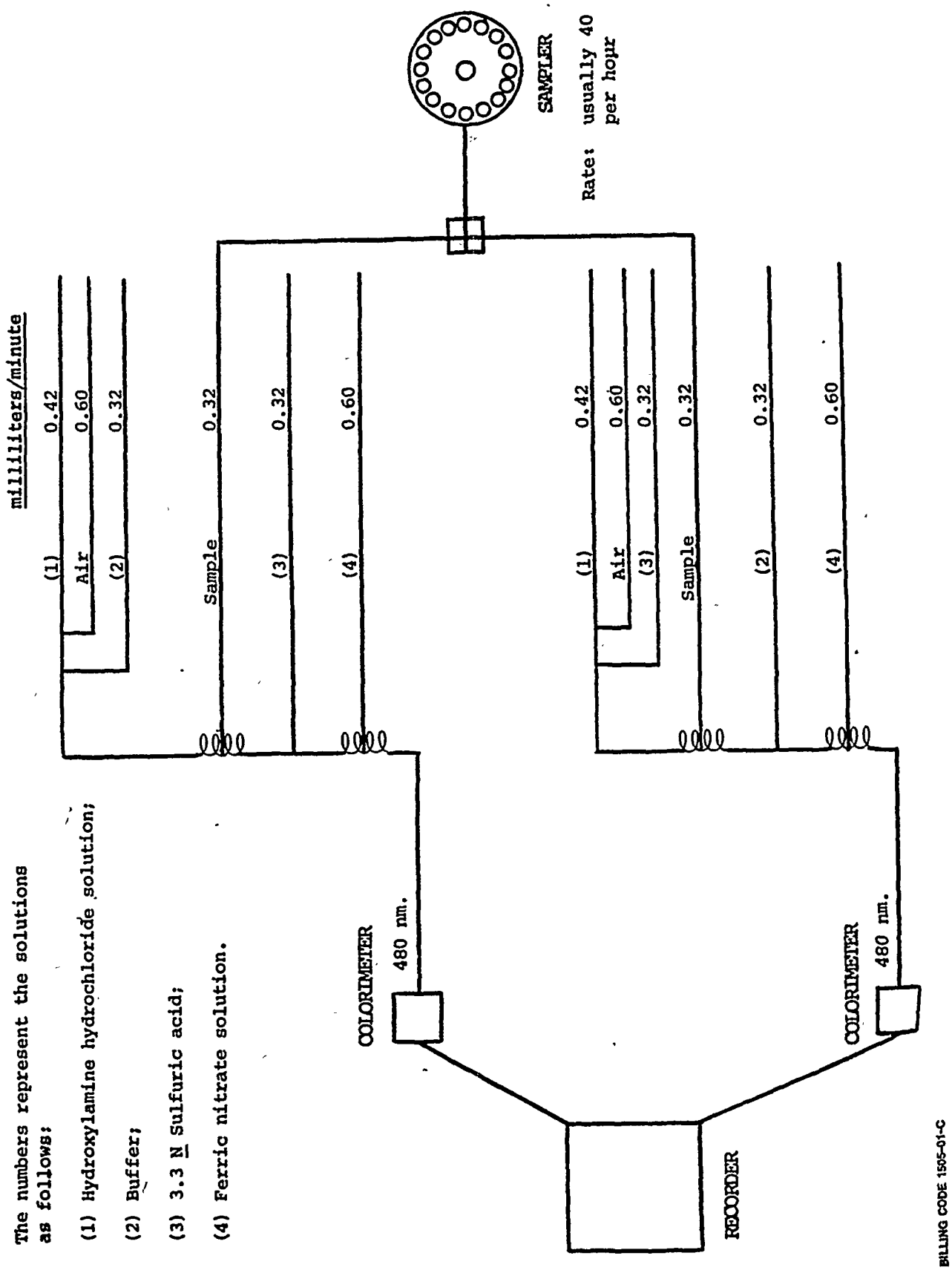

BILLING CODE 1505-01-C

DEPARTMENT OF HOUSING AND URBAN DEVELOPMENT

Office of Assistant Secretary for Housing—Federal Housing Commissioner

24 CFR Part 234

[Docket No. R-80-750]

Condominium Ownership Mortgage Insurance (Involving Existing Single Family Units and Miscellaneous Provision Changes)

AGENCY: Department of Housing and Urban Development (HUD).

ACTION: Final rule.

SUMMARY: Section 313 of the Housing and Community Development Amendments of 1978 authorizes the Department to provide FHA mortgage insurance for condominium units in projects that were conventionally financed if construction was completed more than one year prior to the application for mortgage insurance. These regulations implement that provision.

EFFECTIVE DATE: October 2, 1980.

FOR FURTHER INFORMATION CONTACT: John J. Coonts, Acting Director, Single Family Development Division, Department of Housing and Urban Development, Room 9270, 451 Seventh Street, S.W., Washington, D.C. 20410, (202) 755-6720. (This is not a toll free number).

SUPPLEMENTARY INFORMATION: Section 313(a) of the Housing and Community Development Amendments of 1978 (Pub. L. 95-557) amended Section 234(c) of the National Housing Act (12 U.S.C. 1715y) to authorize mortgage insurance involving condominium units in conventionally financed projects if construction of the project was completed more than a year prior to the application for mortgage insurance. Congressional intent indicated that this new insuring authority is to be used to assist in the resales of existing condominium units rather than to encourage prospective conversion of conventional multifamily rental structures to condominiums which result in displacement of tenants or reduce the availability of needed rental housing. These regulations implement Section 313(a) in accordance with Congressional intent by permitting the use of the new insuring authority only for resales of condominium units.

Proposed regulations were published on January 21, 1980. These final regulations contain changes from the proposed regulations. All of these changes were made in response to issues raised by Departmental and public comment.

The Department received ten letters of comment within the sixty-day public comment period. The major comments included the following recommendations:

1. That HUD should lower or delete the requirement that 70 percent of the units be owner occupied. The final regulations have been modified to authorize the FHA Commissioner to set a lower percentage at his discretion.

2. That the rights of the declarant must have expired or have been waived at any time prior to HUD approval rather than for at least one year prior to that approval. This change has been made.

3. That the certification on deed conditions should come from the mortgagee's attorney rather than from the mortgagee. This change has been made.

4. That the regulations should contain clarifications of the requirement concerning termination of mortgage insurance. This change has been made.

5. That projects built as condominiums which do not involve major displacement and in which units have never been occupied, should be acceptable for mortgage insurance. The Department recognizes the need to make financing easier for home purchasers. However, because of the risks involved, HUD will not participate in a project when the financial security of the condominium has not been established.

6. That HUD should make creative financing such as HUD's Section 245 Graduated Payment Mortgage program available for financing units in a condominium. The Section 245 program is applicable to condominiums insured pursuant to Section 234(c).

7. That HUD should accept units in condominiums which have been approved by the Veterans Administration. This will be permitted provided the project has been operating under a condominium regime for more than one year.

8. That HUD should permit insurance for non-occupant owners or investors. Section 234(c)(3) of the National Housing Act does not permit the insurance of units in a condominium unless the mortgagor is acquiring or has acquired a family unit covered by a mortgage insured under this subsection for his/her own use and occupancy and will not own more than four one-family units covered by mortgages insured under this subsection.

9. That the presale requirement should be relaxed. This change has been made.

10. That the rights of the declarant are too confining because some existing condominium declarations permit unit owners to perform some of the situations mentioned. The final regulations have been modified to identify these as special rights.

The final regulations set forth requirements which the project must meet for individual units to qualify, and generally restate existing HUD policy with respect to the conversion of multifamily projects currently under FHA multifamily mortgage insurance.

Section 234.26 has been rewritten to include the insuring of mortgages encumbering existing single family units in addition to existing provisions for conversion of projects to condominium ownership. A condominium unit in an existing conventionally financed project will be eligible for mortgage insurance if: (1) the project construction has been completed more than one year prior to the application for mortgage insurance; (2) at least 70 percent (for such lesser percentage as the Commissioner may prescribe) of the units are owner occupied and 90 percent (or such lesser percentage as the Commissioner may prescribe) of the units are sold and transactions finalized; and (3) HUD, through the application of appropriate administrative and underwriting guidelines, determines that the project is acceptable. In addition, the existing limitation as to the number of units in the project covered with insured mortgages and owned by the same mortgagor will remain applicable.

Other significant changes made by the regulations are as follows:

1. The current presale requirement applicable to conversions as provided in § 234.26(c)(3) is 80 percent. This is changed to 70 percent by § 234.26(g)(3) of these regulations.

2. Section 234.27 governing "maximum mortgage amounts" and § 234.28 governing "mortgagor's minimum investment" have been changed to bring the maximum mortgage amount ratios and downpayment provisions for veterans into line with HUD's basic mortgage insurance program, Section 203(b).

3. A new provision, § 234.17, is added requiring flood insurance, where applicable.

A finding of inapplicability respecting the National Environmental Policy Act of 1969 has been made in accordance with HUD procedures. A copy is available for public inspection in the Office of the Rules Docket Clerk, Office of the General Counsel, Room 5218, Department of Housing and Urban

Development, 451 Seventh St., SW., Washington, D.C. 20410. This rule is not listed in the Department's semiannual agenda of significant rules, published pursuant to Executive Order 12044, as extended by Executive Order 12221.

Accordingly, Chapter II of Title 24 is amended as follows:

PART 234—CONDOMINIUM MORTGAGE INSURANCE

1. By adding a new § 234.17 as follows:

§ 234.17 Mortgagor and mortgagee requirements for maintaining flood insurance coverage.

(a) If the mortgage is to cover property that (1) is located in an area designated by the Secretary as a flood plain area having special flood hazards, or (2) is otherwise determined by the Commissioner to be subject to a flood hazard; and if flood insurance under the National Flood Insurance Program (NFIP) is available with respect to such property, the mortgagor and mortgagee shall be obligated, by a special condition to be included in the mortgage insurance commitment, to obtain and to maintain NFIP flood insurance coverage on the property during such time as the mortgage is insured. The flood insurance to be maintained shall be in an amount at least equal to either the outstanding balance of the mortgage, less estimated land costs, or the maximum amount of NFIP insurance available with respect to the property, whichever is less. The maintenance of flood insurance coverage on the project by the Association will satisfy the requirements of this section if such coverage protects the interest of the mortgagor in the family unit. For this purpose the interest of the mortgagor is defined as insurance coverage equal to the replacement cost of the project less land costs.

(b) No mortgage shall be insured which covers property located in an area that has been identified by the Secretary as having special flood hazards unless the community in which the area is situated is participating in the National Flood Insurance Program, and such insurance is obtained by the mortgagor. Such requirement for flood insurance shall be effective July 1, 1975, or one year after the date of notification by the Secretary to the chief executive officer of a flood prone community that such community has been identifed as having special flood hazards, whichever is later. The amount of flood insurance required need not exceed the principal balance of the mortgage, less estimated land costs, and need not be required beyond the term of the mortgage.

2. By amending § 234.25(b) as follows:

§ 234.25 Mortgage provisions.

* * * * *

(b) *Mortgage multiples.* The mortgage shall involve a principal obligation in multiples of $50.

* * * * *

3. By amending § 234.26 as follows:

§ 234.26 Project requirements.

No mortgage shall be eligible for insurance unless the following requirements are met:

(a) *Location of family unit.* The family unit shall be located in a project which the Commissioner determines to be acceptable, and which:

(1) Is or has been covered by a project mortgage insured under an FHA multifamily housing program; or

(2) Contains less than 12 units; or

(3) Contains 12 or more units, and, more than one year prior to the application for mortgage insurance, the construction of the project was completed and the project was committed to a plan of condominium ownership. For purposes of this paragraph the date on which construction was completed shall be the latest of the dates on which:

(i) All units have been substantially completed as evidenced by certificates of occupancy from a governmental entity or recorded certificates of completion executed by a registered or licensed architect or engineer; or

(ii) The declarant has completed all common elements and improvements which the declarant is obligated to complete by virtue of State condominium law or the condominium documents.

(b) *Plan of condominium-ownership.* The project shall have been committed to a plan of condominium-ownership by a deed, or other recorded instrument, which is acceptable to the Commissioner.

(c) *Releases.* The family unit shall have been released from any mortgage covering the project or any part of the project.

(d) *Certificate by mortgagee.* The mortgagee shall submit certification from an attorney that:

(1) The deed for the family unit and the deed or other recorded instrument committing the project to a plan of condominium-ownership comply with all legal requirements of the jurisdiction.

(2) The mortgagor has good marketable title to the family unit subject only to the mortgage which is a valid first lien on the same.

(3) The family unit is assessed and subject to assessment for taxes pertaining only to that unit.

(e) *Controls for consumer and public interest.* The Commissioner may require such conditions and provisions as he/she deems necessary for the protection of the consumer and public interest.

(f) *Projects which have not been covered by an insured mortgage.* Projects containing 12 or more units which have not been covered by a mortgage insured under any FHA multifamily housing program and projects containing 12 or more units which are or have been covered by a mortgage insured under sections 213(a)(1) or 213(a)(2) of the Act shall meet the following additional requirements.

(1) At least 90 percent (or such lesser number as the Commissioner may prescribe) of the family units shall have been sold and the titles thereto conveyed to owners having no interest with the developer or the declarant.

(2) At least 70 percent (or such lesser percentage as the Commissioner may prescribe) of the family units shall be occupied by the owners.

(3) Any special right of the declarant (as declarant and not as a unit owner) to do any and all of the following has expired or has been waived in a recorded instrument:

(i) Add land or units to the condominium;

(ii) Convert common elements into additional units or limited common elements;

(iii) Withdraw land from the condominium;

(iv) Use easements through the common elements for the purpose of making improvements within the condominium or within any adjacent land; or

(v) Convert a unit into two or more units, common elements, or into two or more units and common elements.

(g) *Projects which have been or are covered by an FHA insured mortgage.* Projects which have been or are covered by a mortgage insured under an FHA multifamily housing program may be converted to condominium-ownership in compliance with a conversion plan approved by the Commissioner. The conversion plan shall provide for:

(1) The termination by payment in full of the mortgage or by voluntary termination of the insurance contract covering any FHA insured or Secretary-held mortgage on the project, unless the Commissioner determines that his/her interests and those of the individuals purchasing the family units are best served by not requiring the termination of the insurance or payment in full of the mortgage.

(2) The release of each family unit from any existing project mortgage

covering the project pursuant to a release plan approved by the FHA. The plan shall provide for a payment to be made on the outstanding balance of the project mortgage in an amount equal to the share of the balance determined by the FHA to be attributable to the family unit.

(3) The conveyance of family units, equal in value to at least 70 percent (or such lesser percentage as the Commissioner may prescribe) of the total value of all units to owners approved by the FHA.

(4) The project mortgagee shall certify notwithstanding any provisions of the mortgage covering prepayment, that no charge is contemplated or has been collected for prepayment in full of the project mortgage.

(h) *Conditions and Provisions.* The Commissioner may require such conditions and provisions as he/she deems necessary including, but not limited to, the execution of an agreement between the owners and the Commissioner which shall be made applicable to the Association and to any owner of a family unit.

4. By amending § 234.27(a)(2) as follows:

§ 234.27 Maximum mortgage amount.

(a) * * *

(2) 97 percent of the first $25,000 of the Commissioner's estimate of the appraised value of the family unit as of the date the mortgage is accepted for insurance, (100 percent of $25,000 of such value or the sum of such value not in excess of $25,000 and the items of prepaid expense approved by the Commissioner minus $200, whichever appraised amount or sum is the lesser in the case of a mortgagor meeting the veteran qualification provided in Section 203.18(b)), and 95 percent of such value in excess of $25,000.

* * * * *

5. By amending § 234.28 and redesignating paragraph (b) as paragraph (c) and by adding a new paragraph (b) as follows:

§ 234.28 Mortgagor's minimum investment.

* * * * *

(b) In a case involving a veteran meeting the requirements of Section 203.18(b), the minimum investment shall be $200 which may include settlement costs, initial payments for taxes, hazard insurance premiums, mortgage insurance premiums, and other prepaid expenses as approved by the Commissioner.

* * * * *

6. By amending § 234.38(b) as follows:

§ 234.38 Mortgage provisions for additional payments and covenants.

* * * * *

(b) The mortgage shall contain a covenant by the mortgagor to pay the allocated share of the common expense or assessments and charges by the Association of Owners as provided in the Plan of Condominium Ownership.

* * * * *

7. By deleting § 234.59, Certificate and contract regarding use of family units for transient or hotel purposes, and substitute as follows:

§ 234.59 Mortgagor limitations.

The family unit to be covered by an insured mortgage shall be owned and occupied by the mortgagor or the mortgagor shall own and occupy another family unit covered by an insured mortgage. The mortgagor may not own more than four family units covered by insured mortgages, one of which shall be for his/her own use and occupancy.

Sec. 211, 52 Stat. 23, as amended, sec. 234, 75 Stat. 161; 12 U.S.C. 1715b, 1715y)

Issued at Washington, D.C. on September 8, 1980.

Lawrence B. Simons,

Assistant Secretary for Housing—Federal Housing Commissioner.

[FR Doc. 80-28211 Filed 9-11-80; 8:45 am]
BILLING CODE 4210-01-M

DEPARTMENT OF JUSTICE

Parole Commission

28 CFR Part 2

Paroling, Recommitting, and Supervising Federal Prisoners

AGENCY: United States Parole Commission.

ACTION: Interim Rule with request for comments.

SUMMARY: The United States Parole Commission is formally adopting, on an interim basis, with request for comments, the criteria that it presently uses in determining how long a prisoner released on parole shall remain under parole supervision before such supervision is normally terminated. These criteria were originally developed by the Commission's Office of Research so that the termination decisions required by the statute could be placed upon an equitable and empirically justified basis. The interim rule provides that the sentences of parolees given the most favorable parole prognosis by the Commission will normally be terminated after two years of difficulty-free supervision, and the sentences of parolees given less favorable parole prognosis will normally be terminated after three years of difficulty-free supervision.

DATES: This interim rule is effective as of September 12, 1980. Public comment must be received by November 14, 1980.

FOR FURTHER INFORMATION CONTACT: Michael A. Stover, Office of General Counsel, 320 First Street NW., Washington, D.C. 20537; Telephone: 202-724-7567.

SUPPLEMENTARY INFORMATION: Title 18, United States Code, Section 4211 (1976) requires the U.S. Parole Commission to conduct a review of the status of each prisoner who is released on parole supervision two years after release on parole and at least annually thereafter. The Commission is empowered, within its discretion, to grant early termination of supervision, in addition to modifying conditions of parole and levels of supervisory contact.

The statute sets a presumption that parole supervision will be terminated after five continuous years of supervision, but this presumption can be overcome if the Commission finds that there is a "likelihood that the parolee will engage in conduct violating any criminal law." 18 U.S.C. 4211(c)(1).

Early termination of supervision is not a step that can be taken without careful consideration of the risk that might result to the public welfare, because the legal consequence of early termination is that the criminal sentence itself is terminated. The Commission decided that it needed to have a firm empirical basis showing at what point following release the risk of further criminal behavior can be expected to fall to a level at which the continued allocation of its supervisory resources would no longer be justified.

The traditional belief on this subject has been that the first year after release from prison is the most critical. According to this assumption, if a releasee manages to survive the first year without difficulty, the chances of subsequent favorable outcome are significantly enhanced. However, a number of studies conducted during the last decade pointed out a substantial weakness in the statistical logic that was used to support the assumption.

To be meaningful, the probability of unfavorable outcome during any given period must be calculated on the basis of the number of individuals at risk at the beginning of the period. Therefore, a finding that the majority of parole violations occurs during the first year after release does not mean that those who complete the first year of

supervision are necessarily less likely to violate parole during the next year. If the ratio of parole failures to parole successes remains the same for the second year, then it must be concluded that there is no less probability that a releasee will violate parole during the second year than there was during the first year. Not until there is a significant drop in the violation rate among those releasees remaining at the end of each annual period, can it be said that the critical period has passed for any releasee who shares the same characteristics as the releasees for whom that violation rate was obtained.

Following the passage of the Parole Commission and Reorganization Act in 1976, the U.S. Parole Commission's Office of Research did an extensive study of the post-prison experiences of released federal prisoners. See Peter B. Hoffman and Barbara Stone-Meierhoefer, *Post Release Experiences of Federal Prisoners: A Six-Year Followup,* Journal of Criminal Justice Vol. 7, No. 3, 1979, at pp. 193–216.

The results of this study showed that for releasees originally placed by the Commission in the "very good" parole prognosis category (see 28 CFR 2.20) the violation rate (defined as a new criminal arrest or issuance of a violation warrant) was 9 percent during the first year, 10 percent during the second year, and 6 percent the third year of supervision. For releasees in the "good" parole prognosis category, the violation rate was 24 percent during the first year, 19 percent during the second year, 12 percent during the third year, and 9 percent during the fourth year. For releasees in the "fair" prognosis category, the violation rate was 36 percent during the first year, 28 percent during the second year, 21 percent during the third year, and 8 percent during the fourth year. For releasees in the "poor" prognosis category, the violation rate was 49 percent during the first year, 31 percent during the second year, 19 percent during the third year, and 10 percent during the fourth year.

These results clearly indicate that for releasees in the very good prognosis category, the violation rate declines significantly during the third year of supervision. For releasees in the good, fair, and poor categories, the results indicate that a comparable reduction in the violation rate does not occur until after completion of the third year of supervision. Based on this study, the Commission has determined that when the violation rate of a group of releasees begins to stabilize at these levels, the allocation of supervisory resources to such releasees is no longer justified by the amount of risk posed. Therefore, the Commission decided that the standard for early termination could be set at two years of difficulty-free supervision for cases in the very good prognosis category, and at three years of difficulty-free supervision for cases in the good, fair, and poor categories.

Special attention has been given to parolees with Federal Youth Corrections Act commitments, to determine whether the violation rates for those parolees taken separately justify application of the same criteria. The result was that the violation rates for youth offenders were found to be, for each of the first four years after release, several percentage points higher than the violation rates for adult offenders. This conclusion has held true for every category studied. Therefore, it appears that the criteria adopted in the rule are empirically justified for all major types of releasees.

The rule permits termination of supervision earlier than indicated, as well as an extension of supervision beyond the indicated times, provided that case-specific factors are found to justify such a decision. For example, a parolee who has repeatedly received warnings concerning behavior that violates the conditions of parole, or who is the subject of a pending criminal investigation, may be continued on supervision even though no parole violator warrant has been issued during the time that he has spent on parole. Such factors as these may alert the Commission to consider the parolee a higher violation risk than normal.

With respect to terminations of supervision earlier than the indicated times, the Commission's research has not identified any special circumstances that might suggest such a decision in the case of a parolee in the most favorable prognosis category (salient factor score of 9–11) except when supervision is clearly counterproductive. For example, certain jobs or professions might not be available to a person currently serving a criminal sentence, and, in particular cases, such a job may clearly be the best prospect a parolee has to succeed in life. Therefore, the rule specifies that, in order for termination to be granted in these cases before the passage of two years, this condition must be met.

For cases in the other prognosis categories, the rule permits earlier termination than the indicated time if case-specific factors justify the conclusion that the parolee is as good a risk as a parolee in the very good prognosis category. For example, if a parolee with a low salient factor score who has never had a successful employment record settles down and holds a job, that might justify treating him as a better risk than his low score would indicate. However, such a case would still not be terminated earlier than two years (the standard for the best risks) unless the "counterproductive" criterion were also met.

Accordingly, pursuant to 18 U.S.C. 4203(a)(1) and 4204(a)(6), Title 28, Code of Federal Regulations, § 2.43 is revised to read as follows. The rule is set forth in its entirety below.

§ 2.43 Early termination.

(a)(1) Upon its own motion or upon request of the parolee, the Commission may terminate supervision, and thus jursidiction, over a parolee prior to the expiration of his maximum sentence. A committed youth offender may be granted an early termination of jurisdiction (unconditional discharge) after one year of continuous supervision on parole.

(2) Two years after release on supervision, and at least annually thereafter, the Commission shall review the status of each parolee to determine the need for continued supervision. In calculating such two-year period there shall not be included any period of release on parole prior to the most recent release, nor any period served in confinement on any other sentence. A review will also be conducted whenever early termination is recommended by the supervising probation officer.

(3) Five years after release on supervision, the Commission shall terminate supervision over such parolee unless it is determined, after a hearing conducted in accordance with the procedures prescribed in 18 U.S.C. 4214(a)(2), that such supervision should not be terminated because there is a likelihood that the parolee will engage in conduct violating any criminal law. Such hearing may be conducted by a hearing examiner or other official designated by the Regional Commissioner.

(4) If supervision is not terminated under paragraph (a)(3) of this section the parolee may request a hearing annually thereafter, and a hearing shall be conducted with respect to termination of supervision not less frequently than biennially.

(5) In calculating the five-year period referred to in paragraph (a)(3) of this section, there shall not be included any period of release on parole prior to the most recent release or any period served in confinement on any other sentence.

(6) When termination of jurisdiction prior to the expiration of sentence is granted in the case of a youth offender, his conviction shall be automatically set aside. A certificate setting aside his

conviction shall be issued in lieu of a certificate of termination.

(b) The Regional Commissioner in the region of supervision may release a parolee from supervision pursuant to this section if warranted by the circumstances of the case and reports of the supervising probation officer; except that, in the case of a parolee previously considered pursuant to § 2.17, the decision to grant termination of supervision must also be pursuant to the provisions of § 2.17.

(c) (1) In determining whether or not to grant early termination from supervision under paragraph (a)(2) of this section, the Commission shall presume that termination is warranted when:

(i) A parolee with a salient factor score of 9–11 has completed two continuous years of supervision free from any indication of new criminal behavior or serious parole violation; and

(ii) A parolee with a salient factor score of 8 or less has completed three continuous years of supervision free from any indication of new criminal behavior or serious parole violation.

(2) A parolee with a salient factor score of 9–11 will be continued on supervision for two years unless case specific factors show that continued supervision would be counterproductive. A parolee with a salient factor score of 8 or less may be granted termination earlier than three years if case-specific factors warrant the conclusion that such parolee is presently as good a risk as a parolee with a score of 9–11.

(3) A parolee may be continued on supervision past the indicated termination point if case-specific factors justify a conclusion that maintaining continued parole supervision is needed to protect the public welfare.

(4) Cases with pending criminal charge(s) shall not be terminated from supervision until the disposition of such charge(s) is known.

(5) An indication of new criminal behavior shall include a new arrest, if there appears to be substantial evidence of guilt (even if such arrest does not result in conviction or parole revocation).

(d) A parolee may appeal an adverse decision under paragraphs (a)(3) or (4) of this section pursuant to §§ 2.25, 2.26, or § 2.27 as applicable.

Dated: September 8, 1980.

Cecil C. McCall,

Chairman, United States Parole Commission.

[FR Doc. 80-28185 Filed 9-11-80; 8:45 am]

BILLING CODE 4410-01-M

DEPARTMENT OF LABOR

Occupational Safety and Health Administration

29 CFR Part 1952

Approval of Supplements to Oregon State Plan

AGENCY: Occupational Safety and Health Administration, Department of Labor.

ACTION: Final rule.

SUMMARY: The State of Oregon has submitted an Occupational Safety and Health Plan supplement containing the State's recordkeeping and reporting regulations. This document announces the approval of the supplement.

EFFECTIVE DATE: September 12, 1980.

FOR FURTHER INFORMATION CONTACT: Joseph C. Acton, Project Officer, Office of State Programs, Occupational Safety and Health Administration, 200 Constitution Avenue, N.W., Washington, D.C. 20210, (202) 523–8045.

SUPPLEMENTARY INFORMATION:

Background

Part 1953 of Title 29, Code of Federal Regulations, provides procedures under Section 18 of the Occupational Safety and Health Act of 1970 (29 U.S.C. 667) (hereinafter referred to as the Act) for review of changes and progress in the development and implementation of State plans which have been approved in accordance with Section 18(c) of the Act and Part 1902 of this chapter. On December 28, 1972, a notice was published in the Federal Register (37 FR 28628) of the approval of the Oregon plan and the adoption of Subpart D to Part 1952 containing the decision. The notice of approval of Revised Developmental Schedule was published on April 1, 1974, in the Federal Register (39 FR 11881). On June 4, 1974, the State adopted administrative regulations which included requirements for recordkeeping and reporting by employers concerning work-related injuries and illnesses of employers. In response to Federal changes to 29 CFR Part 1904, the State revised the recordkeeping and reporting portion of its regulations effective January 1, 1978, and September 24, 1979. Review of these regulations and revisions by the Bureau of Labor Statistics and OSHA indicated that the State regulations are substantially identical to the corresponding federal provisions.

Description of the Supplement

The supplement contains the Oregon State regulations which require employers to maintain injury and illness records for each establishment and to participate as requested in the Occupational Injury and Illnesses Survey. In addition, an employer must annually post a summary to inform employees of the safety and health record for the previous year. Revisions were made to adopt a new recordkeeping form identical to OSHA Form 200, to extend access to an employer's injury and illness records required by Oregon to current and past employees, and to exempt employers with ten or fewer employees from routinely maintaining the log, summary, and supplemental record of injuries and illnesses unless specifically selected for a statistical survey. The State rules also provide penalties for failure to comply with the requirements or falsification of records.

Location of the Plan and Its Supplements for Inspection and Copying

A copy of the regulation, along with the approved plan, may be inspected and copied during normal business hours at the following locations: Office of the Regional Administrator, Occupational Safety and Health Administration, Federal Office Building, Room 6048, 909 First Avenue, Seattle, Washington 98174; Office of State Programs, Occupational Safety and Health Administration, Room N–3613, 3rd Street and Constitution Avenue N.W., Washington, D.C. 20210; State of Oregon Workers' Compensation Board, Labor and Industries Building, Salem, Oregon 47310.

Public Participation

Under § 1953.2 of this chapter, the Assistant Secretary may prescribe alternative procedures to expedite the review process or for any other good cause which may be consistent with applicable law. The Assistant Secretary finds that the Oregon recordkeeping and reporting rules incorporate provisions substantially identical to provisions contained in 29 CFR Part 1904 and required of States by 29 CFR 1952.4.

Decision

After careful consideration, the Oregon plan supplement outlined above is approved under Part 1953. This decision incorporates the requirements of the Act and implementing regulations applicable to State plans generally. In addition Subpart D of 29 CFR Part 1952 is amended to reflect the completion of a developmental step upon the approval of the State recordkeeping and reporting regulations. Accordingly, § 1952.109 of Subpart D of Part 1952 is hereby

amended by adding a new paragraph (h) to read as follows:

§ 1952.109 Completed developmental steps.

* * * * *

(h) In accordance with the requirements of § 1952.4, Oregon State recordkeeping and reporting regulations adopted on June 4, 1974, and subsequently revised, were approved by the Assistant Secretary on August 28, 1980.

(Sec. 18, Pub. L. 91-596, 84 Stat. 1608 (29 U.S.C. 667))

Signed at Washington, D.C. this 28th day of August 1980.

Eula Bingham,

Assistant Secretary of Labor.

[FR Doc. 80-28331 Filed 9-11-80; 8:45 am]

BILLING CODE 4510-26-M

DEPARTMENT OF DEFENSE

Department of the Air Force

32 CFR Part 814

Responsibility of the Contractor

AGENCY: Department of the Air Force, Department of Defense.

ACTION: Final rule.

SUMMARY: The Department of the Air Force is amending Title 32, Chapter VII of the CFR by deleting Part 814, Responsibility of the Contractor. This rule is deleted because the source document is obsolete. The intended effect of this amendment is to improve 32 CFR, Chapter VII, by removing unnecessary material.

EFFECTIVE DATE: September 5, 1980.

FOR FURTHER INFORMATION CONTACT: Mrs. Carol M. Rose, Air Force Federal Register Liaison Officer, AS/DASJR, Pentagon, Washington, DC 20330, telephone: (202) 697-1861.

SUPPLEMENTARY INFORMATION: Accordingly, 32 CFR is amended by deleting Part 814.

Carol M. Rose,

Air Force Federal Register Liaison Officer.

[FR Doc. 80-28230 Filed 9-11-80; 8:45 am]

BILLING CODE 3910-01-M

Department of the Army

33 CFR Part 207

Navigation Regulations; Cape Cod Canal, Mass.; Correction

AGENCY: U.S. Army Corps of Engineers, DoD.

ACTION: Correction.

SUMMARY: A final rule was published in the Federal Register on August 4, 1980 (45 FR 51551) amending the regulations in 33 CFR 207.20. These regulations govern the use, administration and navigation of the Cape Cod Canal, Massachusetts. The regulations are corrected with respect to the second sentence of paragraph § 207.20(f) *Dangerous Cargoes* in which 33 CFR 124.14(b) is changed to read 33 CFR 126.10.

EFFECTIVE DATE: September 12, 1980.

ADDRESS: HQDA (DAEN-CWO-N), Washington, DC 20314.

FOR FURTHER INFORMATION CONTACT: Mr. Ralph T. Eppard, (202) 272-0200.

John O. Roach II,

Army Liaison Officer with the Federal Register.

[FR Doc. 80-28105 Filed 9-11-80; 8:45 am]

BILLING CODE 3710-92-M

DEPARTMENT OF THE INTERIOR

National Park Service

36 CFR Part 7

Special Regulations, Areas of the National Park System; Saint Croix National Scenic Rivers; Water Use Regulations

AGENCY: National Park Service, Interior.

ACTION: Correction of final rule.

SUMMARY: On June 27, 1979, the National Park Service published in the Federal Register (44 FR 37503), final regulations governing water use in Saint Croix National Scenic Rivers. During the publishing process two sections became scrambled, were printed wrong, and require correcting. The purpose of this document is to make that correction.

EFFECTIVE DATE: September 12, 1980.

FOR FURTHER INFORMATION CONTACT: Gustaf P. Hultman, Superintendent, Saint Croix National Scenic Rivers, P.O. Box 708, St. Croix Falls, Wisconsin 54024, Telephone: (715) 483-3287.

SUPPLEMENTARY INFORMATION:

Impact Analysis

The National Park Service has made a determination that the correction of this final rule is not significant, as that term is defined in 43 CFR Part 14, nor does it require the preparation of a regulatory analysis pursuant to the provisions of this authority. In addition, the Service has determined that this regulation is not a major Federal action significantly affecting the quality of the human environment, which would require the preparation of an environmental impact statement.

Since this is a correction of a final rule the National Park Service has determined that it is impractical and unnecessary to provide a notice of proposed rulemaking on this action. Therefore, in accordance with 5 U.S.C. 553 (b)(B) and 43 CFR 14.5 (b)(3)(i), this document is published as a final rule.

Section 3 of the Act of August 24, 1916 (39 Stat. 535, as amended; 16 U.S.C. 3); 245 DM 1 (44 FR 23384); and National Park Service Order No. 77 (38 FR 7478), as amended)

F. Ross Holland, Jr.,

Acting Associate Director, Management and Operations.

Therefore, in consideration of the foregoing, § 7.9(a)(3)(ii)(b) should be corrected to read as follows:

§ 7.9 St. Croix National Scenic Rivers.

(a) * * *

(3) * * *

(ii) * * *

(b) Within 100 feet of shore (including shores of islands) and of swimmers, from the sandbars located at Mile 31.0 (Arocola Sandbar) to the northern city limits of Stillwater at Mile 24.5.

There should be no paragraph (a)(3)(ii)(c).

[FR Doc. 80-28271 Filed 9-11-80; 8:45 am]

BILLING CODE 4310-70-M

ENVIRONMENTAL PROTECTION AGENCY

40 CFR Part 180

[FRL 1604-2, PP 7F1970/R273]

Nitrapyrins, Tolerances and Exemptions From Tolerances for Pesticide Products in or on Raw Agricultural Commodities

AGENCY: Environmental Protection Agency (EPA).

ACTION: Final rule.

SUMMARY: This rule establishes tolerances for residues of the metabolite of the soil microbiocide nitrapyrin in or on corn fodder and forage at 1.0 part per million (ppm). The regulation was requested by Dow Chemical Co. This amendment would increase the established maximum permissible level for residues of 6-chloropicolinic acid in or on corn fodder and forage resulting from the use of nitrapyrin.

EFFECTIVE DATE: Effective on September 12, 1980.

FOR FURTHER INFORMATION CONTACT: Richard F. Mountfort, Product Manager (PM) 23, Rm. E-351, Registration Division (TS-767), Office of Pesticide Programs, Environmental Protection

Agency, 401 M St., SW, Washington, DC 20460, (202–755–1397).

SUPPLEMENTARY INFORMATION: EPA issued a notice that published in the Federal Register on July 25, 1977 (42 FR 37847) that Dow Chemical Co., P.O. Box 1706, Midland, MI, had filed a pesticide petition (pp 7F1970). This petition proposed that 40 CFR 180.350 be amended by the establishment of a tolerance for residues of 6-chloropicolinic acid resulting from the use of the microbiocide nitrapyrin [2-chloro-6-(trichloro-methyl)pyridine] in or on the raw agricultural commodities potatoes at 1 ppm; endive, grain crops (except rice), lettuce, sugar beets (tops and roots) and tomatoes at 0.1 ppm. No comments were received in response to this notice of filing.

Dow Chemical Co. subsequently amended the petition by proposing 1.0 ppm tolerances for corn fodder and forage and by withdrawing their request for all other previously proposed tolerances in PP 7F1970. This revision resulted in a proposal to increase the established tolerances of 0.5 ppm in or on corn fodder and forage to 1.0 ppm. The change in proposed tolerances are not being submitted for public comment since forage and fodder are fed to livestock and the existing meat tolerances cover any possible residues; thus, there would not be an increased exposure to humans.

The data submitted in this petition and other relevant material have been evaluated. The data included metabolism studies in plants, dogs, and rats; plant residue studies; 90-day dog and rat feeding studies (parent compound-nitrapyrin) with no-observed-effect level (NOEL) of 600 ppm and 300 ppm respectively; 90-day dog and rat feeding studies (metabolite, 6-chloropicolinic acid) with a NOEL of 2,000 ppm and 300 ppm respectively; a rat acute oral toxicity study with a lethal dose (LD_{50}) equal to 1.23 grams (g)/kilogram (kg) of body weight (bw); 2-year dog and rat feeding studies (metabolite) with a NOEL greater than (>) 2,000 ppm and equal to 300 ppm respectively; a 3-generation rat reproduction study (metabolite) with a reproductive NOEL of 100 ppm and a rat teratology study (metabolite) with no teratogenic potential noted at 1,000 ppm; and a 2-year rat oncogenicity study (metabolite) with no oncogenic potential noted at 300 ppm (same study as above 2-year rat feeding study). An oncogenicity study in a second species is lacking and needed to reinforce the present findings. Dow Chemical Co. has agreed to submit the second oncogenicity study by January 1, 1983.

Tolerances have previously been established for residues of 6-chloropicolinic and ranging from 0.05 ppm in the meat, fat, and meat byproducts of cattle, goats, hogs, horses, poultry and sheep to 1.0 ppm on cottonseed. Based upon the NOEL of 300 ppm in the rat 2-year feeding study, the acceptable daily intake (ADI) has been set at 0.15 mg/kg of bw/day with a maximum permissible intake (MPI) of 9 mg/day/60 kg person. Published tolerances for nitrapyrin utilize 0.36 percent of the ADI. The requested amendment would not alter the percentage utilized.

The metabolism of nitrapyrin is adequately understood and an adequate analytical method (gas-liquid chromatography using an electron capture detector) is available for enforcement purposes.

Tolerances previously established under 40 CFR 180.350 will be adequate to cover residues that would result in meat, fat, and meat byproducts of cattle, goats, hogs, horses, poultry and sheep, and there is no reasonable expectation of residues in eggs and milk. There are no pending regulatory actions against continued registration of nitrapyrin.

The pesticide is considered useful for the purpose for which the tolerances are being sought, and it is concluded that the tolerances of 1.0 ppm in or on corn fodder and forage will protect the public health. It is concluded, therefore, that the tolerance be established as set forth below.

Any person adversely affected by this regulation may, on or before October 14, 1980, file written objections with the Hearing Clerk, EPA, Rm. M-3708, (A-110), 401 M Street SW., Washington, D.C. 20460. Such objections should be submitted in quintuplicate and specify the provisions of the regulation deemed to be objectionable and the grounds for the objections. If a hearing is requested, the objections must state the issues for the hearing. A hearing will be granted if the objections are supported by grounds legally sufficient to justify the relief sought.

Under Executive Order 12044, EPA is required to judge whether a regulation is "significant" and therefore subject to the procedural requirements of the Order or whether it may follow other specialized development procedures. EPA labels these other regulations "specialized." This proposed rule has been reviewed, it has been determined that it is a specialized regulation not subject to the procedural requirements of Executive Order 12044. Effective on: September 12, 1980.

(Sec. 408(e), 68 Stat. 561 (21 U.S.C. 346a(e))

Dated: September 4, 1980.

Edwin L. Johnson,

Deputy Assistant Administrator for Pesticide Programs.

Therefore, Subpart C of 40 CFR Part 180 is amended by arranging the material in alphabetical tabular format, revising the heading, and changing the tolerance levels to 1.0 ppm for corn fodder and forage under § 180.350 to read as follows:

§ 180.350 Nitrapyrin; 6-Chloropicolinic acid; tolerances for residues.

Tolerances are established for residues of nitrapyrin 6-chloropicolinic acid resulting from the use of the soil microbicide nitrapyrin (2-chloro-6-(trichloromethyl)-pyridine) in or on the following raw agricultural commodities.

Commodity	Parts per million
Cattle, fat	0.05 (N)
Cattle, mbyp	0.05 (N)
Cattle, meat	0.05 (N)
Corn, fodder	1.0
Corn, forage	1.0
Corn, grain	0.1 (N)
Corn, fresh (including sweet K+CWHR).	0.1 (N)
Cottonseed	1.0
Goats, fat	0.05 (N)
Goats, mbyp	0.05 (N)
Goats, meat	0.05 (N)
Hogs, fat	0.05 (N)
Hogs, mbyp	0.05 (N)
Hogs, meat	0.05 (N)
Horses, fat	0.05 (N)
Horses, mbyp	0.05 (N)
Horses, meat	0.05 (N)
Poultry, fat	0.05 (N)
Poultry, mbyp	0.05 (N)
Poultry, meat	0.05 (N)
Sheep, fat	0.05 (N)
Sheep, mbyp	0.05 (N)
Sheep, mbyp	0.05 (N)
Sorghum, fodder	0.5
Sorghum, forage	0.1 (N)
Sorghum, grain	0.1 (N)
Wheat, forage	0.5
Wheat, grain	0.1 (N)
Wheat, straw	0.5

[FR Doc. 80-28202 Filed 9-11-80; 8:45 am]

BILLING CODE 6560-01-M

DEPARTMENT OF HEALTH AND HUMAN SERVICES

Public Health Service

42 CFR Part 57

Grants for Training in Emergency Medical Services

AGENCY: Public Health Service, HHS.

ACTION: Final regulations.

SUMMARY: These regulations set forth requirements for grants for training programs in emergency medical services, under section 789 of the Public Health Service Act. These grants would

go to schools of medicine, dentistry, osteopathy, and nursing; training centers for allied health professions; hospitals; and other appropriate educational and public entities.

EFFECTIVE DATE: These regulations are effective on October 30, 1980.

FOR FURTHER INFORMATION CONTACT: Kenneth P. Moritsugu, M.D., M.P.H., Director, Division of Medicine, Bureau of Health Professions, Health Resources Administration, Center Building, 3700 East-West Highway, Hyattsville, Md. 20782 (301-436-6418).

SUPPLEMENTARY INFORMATION: In the Federal Register of September 16, 1977 (42 FR 46523), the Assistant Secretary for Health, with the approval of the Secretary of Health, Education, and Welfare, amended Subpart V, "Grants for Training in Emergency Medical Services," of 42 CFR Part 57. These regulations implemented Section 789 of the Public Health Service Act, as amended (42 U.S.C. 295g-9).

Due to the need to award grants prior to October 1, 1977, these regulations were issued as interim-final regulations, without benefit of proposed rulemaking procedures. Notwithstanding the omission of these rulemaking procedures, interested persons were invited to submit comments no later than November 15, 1977. Following the close of the comment period, the regulations were to be revised as warranted by public comments received. Ten comments on the interim-final regulations were received during the comment period. The comments, the Department's response to the comments, and the revisions made in the regulations are indicated below. For clarity, the comments and responses have been arranged according to the section numbers and titles of the interim-final regulations to which they pertain.

Section 57.2103—Definitions

It was suggested that in the definition of "advanced life support facility," the phrase "psychiatric conditions" be used to replace "psychiatric injuries" in the last line. It was argued that many patients in need of emergency care may have acute conditions with no apparent injury, but with potential harm or threat to life. It is considered essential that advanced life support facility staff be able to detect and provide initial management of these other psychiatric conditions; therefore, the recommendation to use the phrase "psychiatric conditions" to replace "psychiatric injuries" was accepted.

It was noted that no definition for emergency medical technician-ambulance was included in this section. The Department is not defining this term in § 57.2103, because its meaning is implicit in the project requirements for emergency medical technician-ambulance, in § 57.2106(b)(1).

Suggestions were also made to broaden the definition of "emergency nursing" to include other appropriate involvement of nurses in emergency medical services systems activities. Accordingly, the definition was expanded to include the administration, research, and teaching of emergency medical services activities.

An extensively detailed section was offered to replace the definition of "emergency nursing." The Department believes that the substitute section was overly detailed and too expansive to be inserted wholly into the regulations and, therefore, elected to condense elements of the suggested section into a revised, but concise definition.

A recommendation was also made to expand the definition of "emergency physician" by referring specifically to inpatient experiences and management of the emergency medical services system for the provision of prehospital emergency care. The Department believes that these two specific activities are included in the existing definitions; therefore, this recommendation was not accepted.

One comment expressed the concern that the definition of medical director would exclude some physicians from that position because the definition requires the medical director to be an emergency physician. The definition of medical director has not been changed because the Department believes that the medical director must be an emergency physician to be consistent with the Title XII emphasis on systems development and medical control.

Section 57.2106—Project Requirements

One comment expressed the concern that because the regulations did not contain any specific requirements in § 57.2106(b) concerning the training of physician's assistants in emergency medicine, this training could not be supported under section 789 of the Act and these regulations. Projects for the training of physician's assistants in emergency medicine, as well as other training in emergency medicine, can be supported as long as the training program meets the requirements of the relevant provisions of the Act and the regulations. The specific requirements in § 57.2106(b) establish *additional* requirements that must be met *if* a project is for the training of emergency medical technicians, emergency nursing personnel or emergency physicians. These requirements do not preclude the support of other training programs.

An extensively detailed section was offered to replace the specific requirements in projects for the training of emergency nursing personnel. The Department feels that the suggested section went into greater detail than is necessary for the regulations. The comment was reviewed and appropriate elements were integrated into a more concise revision of that section of the regulations. Other elements of the suggested section are either already included in the regulations or are addressed by addition of the phrase "prepare nurses to meet the practice standards."

The Department also revised § 57.2106(b)(4)(i) to require approval or provisional approval of emergency medicine residency programs by the American Osteopathic Association for osteopathic programs.

Also, § 57.2106(b)(5)(ii), regarding projects for the continuing education of physicians, has been revised to include programs in osteopathic medicine and to require training to satisfy the requirements of continuing medical education credit of the American Osteopathic Association or to meet Category 3 requirements of either the Liaison Committee on Continuing Education or the American Medical Association. These changes were made in response to approval of the American Board of Emergency Medicine by the American Board of Medical Specialties and approval of programs in osteopathic emergency medicine by the American Association of College of Osteopathic Medicine.

Section 57.2107—Evaluation of Aplications

One comment suggested that each project application should be reviewed by appropriate members of the National Advisory Council on Health Professions Education, who reflect the professional areas within the application, and that all the Council's project reviewers should agree before the application is approved for funding. This suggestion was not accepted because the review process does not require unanimous decisions in order that awards be made. Furthermore, the composition of the Council includes representation of appropriate disciplines in the review process, which is the concern expressed in this comment.

Concern was also expressed that the "requirement" that training programs emphasize "interdisciplinary" approaches would not include important interspecialty programs. It was, therefore, recommended that the term

"interdisciplinary" be amplified to specifically explain that the meaning is not limited to programs between disciplines. The interdisciplinary focus in the regulations for grants for training in emergency medical services is a priority preference feature taken into consideration during the review of the application and is not a requirement. This priority preference feature is intended to promote the development of team approaches to emergency medical services delivery between disciplines. Projects which include within-discipline interaction would be acceptable in this grant program, but would not be afforded the priority preference. For this reason, the recommendation to amplify the definition of "interdisciplinary" to include programs within disciplines was not accepted.

Another comment recommended eliminating the funding preference for training programs at a school of medicine or osteopathy that has an administrative unit solely responsible for educational programs in emergency medicine. It was pointed out that quality programs can be run through the joint sponsorship of specialty departments related to emergency medicine, such as internal medicine, general surgery, and family practice. The purpose of this funding preference is to encourage the development of an institutional focal point for multifaceted and multilevel EMS educational activities. Therefore, the priority preference for applicants having an administrative unit responsible for educational programs in emergency medicine has been retained in the regulations. The requirement that the unit must have these educational programs as its *sole* responsibility, however, has been deleted in order to allow schools greater administrative flexibility while still meeting the goal of providing an institutional focal point.

The funding priority for proposed projects to conduct training in health manpower shortage areas has been deleted because the need for emergency medical services has not been demonstrated to be directly related to an area's overall need for health manpower.

One general comment was received expressing adequacy of the regulations, but further suggesting that training programs should:

1. Carry academic credit for the didactic phase of the program;
2. Require clinical experience as a portion of the program;
3. Require supervised field experience as part of the program; and
4. Provide participants with appropriate certification upon completion of the program.

Academic credit is given at local discretion, where appropriate, and when training is conducted in academic institutions. The Department feels that this should not be adopted as a requirement, because organizations other than academic institutions are eligible to conduct training programs for emergency medical technicians. The Department believes that suggestions 2, 3, and 4 are already included in existing provisions of the regulations and program guidelines.

Section 57.2115—Records, audit and inspection.

Under § 57.2115(b) entitled "Audit," it was noted that the word "accurate" is an exactitude to which an auditor does not attest, and that the intent of an audit of the nature implied is to express an opinion on financial information presented. This particular language was excerpted from section 705(b) of the Act as in effect at that time. On November 9, 1978, the Health Services Research, Health Statistics, and Health Care Technology Act of 1978 (Pub. L. 95–623), amended 705(b) and removed this requirement. Therefore, § 57.2113 of these regulations references the revised section 705.

In addition, as noted in the preamble to the interim-final regulations, section 306(k) of Pub. L. 95–83, the Health Services Extension Act of 1977 (August 1, 1977) amended paragraph (1) of section 789(a) to authorize traineeships and fellowships to residents who plan to specialize or work as physicians in the practice of emergency medicine. The Department has amended the interim-final regulations to provide for these traineeships and fellowships in §§ 57.2101(b), and 57.2106(b)(4)(ix) of the final regulations.

Finally, the Department has restructured the final regulations based on "Operation Common Sense," the Department's initiative to improve the quality and readability of its regulations. The grants administration and nondiscrimination provisions (interim-final §§ 57.2108–57.2116) have either been updated to reflect current policy or deleted as duplicative of the Department's grants administration regulation (45 CFR Part 74). All provisions have been reorganized into a standardized format for health manpower grants regulations, and many provisions have been rewritten for clarity.

Accordingly, the existing Subpart V of 42 CFR Part 57 is revised as set forth below.

Dated: July 16, 1980.

Julius B. Richmond,

Assistant Secretary for Health.

Approved: September 4, 1980.

Patricia Roberts Harris,

Secretary.

Subpart V—Grants for Training in Emergency Medical Services

Sec.
57.2101 To what programs do these regulations apply?
57.2102 General policy.
57.2103 Definitions.
57.2104 Who is eligible to apply for a grant?
57.2105 Application contents.
57.2106 Project requirements.
57.2107 How will applications be evaluated?
57.2108 How long does grant support last?
57.2109 How is the amount of the grant award determined?
57.2110 For what purposes may grant funds be spent?
57.2111 What health planning requirements must be met?
57.2112 What additional Department regulations apply to grantees?
57.2113 What other audit and inspection requirements apply to grantees?
57.2114 Additional conditions.

Authority: Section 215, Public Health Service Act, 58 Stat. 690, as amended 63 Stat. 35 (42 U.S.C. 216); section 789, Public Health Service Act, 90 Stat. 2243, as amended 90 Stat. 2709 (42 U.S.C. 295g–9).

Subpart V—Grants for Training in Emergency Medical Services

§ 57.2101 To what programs do these regulations apply?

These regulations apply to the award of grants under section 789 of the Act to schools of medicine, dentistry, osteopathy, and nursing; training centers for allied health professions; hospitals, and other appropriate educational and public entities, to assist in meeting the cost of:

(a) Training programs in the techniques and methods of providing emergency medical services; and

(b) Providing financial assistance (in the form of traineeships and fellowships) to residents who participate in projects for the residency training of emergency physicians, and who plan to specialize or work in the practice of emergency medicine.

§ 57.2102 General policy.

Grant awards will be made to eligible entities in the establishment, improvement, or expansion of training programs in the techniques and methods of providing emergency medical services, which will contribute to the establishment, operation, improvement, or expansion of emergency medical services systems.

§ 57.2103 Definitions.

"Act" means the Public Health Service Act as amended.

"Advanced Life Support Facility" or "ALS facility" means a hospital with facilities and services specifically designed for the care of critical illnesses and injuries such as trauma, including burns and spinal cord injuries, acute cardiac disorders, high risk infants, poisoning, and behavioral problems, including acute alcohol intoxication, drug overdose and psychiatric conditions.

"Appropriate public entity" means a State, a unit of general local government, or any other public entity which:

(a) Has established an emergency medical services system; and

(b) Except with respect to the basic training of emergency medical technicians, has entered into an agreement with an appropriate education entity for a training program supported under this subpart.

"Associate advanced life support facility" or "associate ALS facility" means a health care delivery facility that interrelates in terms of area-wide advanced life support planning (including educational planning) with a designated advanced life support facility.

"Clinical experience" means direct, supervised participation in patient care by observation, examination, and performance of procedures as are appropriate for the assigned role of the trainee on the health team.

"Educational entity" means:

(a) A public or nonprofit private school of medicine, dentistry, or osteopathy as defined in section 701(4) of the Act and which is accredited under section 772(b) of the Act;

(b) A school of nursing, as defined in section 853(2) of the Act;

(c) A training center for allied health professions, as defined in section 795(2) of the Act; or

(d) A public or nonprofit private organization which has the provision of educational programs as one of its major functions and which itself delivers emergency medical services or has a written agreement with an organization which delivers these services and agrees to provide the setting for the clinical experience required for the proposed training.

"Emergency medical services" means the services used in responding to the perceived individual need for immediate medical care in order to prevent loss of life or aggravation of physiological or psychological illness or injury.

"Emergency medical services council" means a public agency or a formally established or recognized advisory body of a public agency responsible for review and evaluation of emergency medical services in the area of the project.

"Emergency medical services system" means a system which provides for the arrangement of personnel, facilities, and equipment for effective and coordinated delivery of health care services in an appropriate geographical area under emergency conditions (occurring either as a result of the patient's condition or of natural disasters or similar situations) and which is administered by a public or nonprofit private entity which has the authority and the resources to provide effective administration of the system.

"Emergency medical services systems director" means the designated person responsible for overall direction of the emergency medical services system in the geographic area of the system.

"Emergency medical technicians—paramedic" means persons trained to provide advanced life support services including trauma and cardiac care, and other critical medical prehospital care for acutely ill or injured patients (i.e., treatment of shock, drug administration, and cardiac arrhythmia detection and control).

"Emergency nursing" means:

(a) The unscheduled or episodic nursing care of individuals with acute physical or emotional illnesses which require prompt intervention, and;

(b) the administration, research, and teaching of other emergency medical services activities.

"Emergency physician" means a licensed physician who is trained to and engages in:

(a) the immediate recognition, evaluation, and care of acutely ill or injured patients under emergency conditions;

(b) The administration, research, and teaching of all aspects of emergency medical services; and

(c) the direction of the patient to sources of follow-up care in or outside the hospital, as required.

"Medical director" means an emergency physician who provides medical direction for the entire program of clinical instruction and evaluates students' clinical experience.

"Secretary" means the Secretary of Health and Human Services and any other officer or employee of the Department of Health and Human Services to whom the authority involved has been delegated.

"State" means one of the several States, the District of Columbia, the Commonwealth of Puerto Rico, the Northern Mariana Islands, the Virgin Islands, Guam, American Samoa, and the Trust Territory of the Pacific Islands.

"Training program director" means an individual designated to provide competent overall direction and coordination for the organization, administration, periodic review, continued development, and effectiveness of the educational program.

§ 57.2104 Who is eligible to apply for a grant?

Any educational entity, appropriate public entity, or public or nonprofit private hospital located in a State may apply for a grant.

§ 57.2105 Application contents.

In addition to other pertinent information which the Secretary may require, an application for a grant under this subpart must contain:

(a) A detailed description of the proposed project which meets the applicable requirements of § 57.2106 including:

(1) A description of the specific measurable objectives of the proposed project which are consistant with the purposes of section 789 of the Act, and a detailed plan for achieving those objectives;

(2) A description of the administrative staff and faculty available for the conduct of the proposed project, including their professional background, qualifications, academic training, responsibilities, and functions;

(3) A description of the facilities, equipment, and educational resources available for the conduct of the proposed project;

(4) A description of any cooperative arrangements with other institutions, agencies, or organizations for carrying out the proposed project, including arrangements for the provision of clinical practice facilities;

(5) A detailed description of the curriculum for the training program;

(6) A description of recruitment plans and criteria for the selection and admission of students, including the extent to which the program intends to emphasize the recruitment and necessary training of veterans of the Armed Forces with military training and experience in health care fields and of appropriate public safety personnel, which include policemen, fire fighters, and other public employees charged with maintaining public safety;

(7) An estimate of the number of individuals to be trained in each training cycle;

(8) A detailed budget for the proposed project and a justification of the amount of grant funds requested;

(9) A description of the financial resources available to the applicant to assure the sound establishment and maintenance of the proposed project, including a description of the extent to which funds have either been sought by or have been made available to the applicant from Federal programs authorized by statutes other than the Act for the support of the proposed project; and

(10) A description of the plans, if any, for continuing the proposed project beyond the project period.

(b) Evidence of the unavailability of educational programs necessary to supply and maintain sufficient numbers of emergency physicians, dentists, nurses, allied health personnel, and emergency medical technicians (ambulance and paramedic) needed to provide emergency health services on a 24-hour basis in the geographic area for which the applicant proposes to train personnel.

(c) Evidence that the proposed project is coordinated with other programs (existing or planned) in the geographic area for which the applicant proposes to train emergency medical personnel.

(d) Evidence that all applicable requirements of section 1513(e) of the Act have been met.

(e) Evidence that the proposed project has been submitted for review to the emergency medical services system director, the emergency medical services council, if any, and any other entities responsible for the review of emergency medical services in the geographic area for which the applicant proposes to train emergency medical personnel. Copies of any written comments received from these reviews must be submitted to the Secretary.

(f) If stipend support is requested by an applicant to provide a portion of the salary of residents enrolled in the program, documentation showing that income available from alternative sources, including income derived from the services of the residents in the program, will be insufficient to pay their salaries and that grant funds will not be used to supplant other available funds.

§ 57.2106 Project requirements.

(a) *General requirements.* A project supported under this subpart must be conducted in accordance with the following requirements:

(1) The project must be conducted in accordance with section 789 of the Act, the regulations of this subpart, the approved application, and the terms of the award.

(2) The project must provide a training program which meets relevant standards and guidelines established by appropriate:

(i) Accrediting bodies recognized by the Secretary of Education,

(ii) Federal or State agencies, or

(iii) Professional associations;

unless the Secretary determines for demonstration purposes that the requirement of this paragraph should be waived on an application by application basis.

(3) The project must provide the training necessary to enable its graduates to meet any relevant laws or regulations governing employment standards or credentials for emergency medical personnel in the geographic area for which the applicant proposes to train personnel.

(4) The project must have a systematic plan for evaluating the training program, inclusing the performance of the students, the degree to which defined objectives are met, and the impact of the program on the delivery of emergency medical services in the geographic area for which the project proposes to train emergency medical personnel.

(5) The project must have an appropriate setting for the clinical experience required for the training which must be provided either by the grantee or through a written agreement with an organization delivering emergency medical services. The facility chosen for the clinical experience must have major emergency medical capabilities and adequate patient volume and must deliver a variety of emergency medical services.

(6) The project must have available adequate faculty, staff facilities, and equipment for the conduct of the training program.

(7) The project must have a grant project director. The grant project director may also be a training program director. If the grant project director becomes unable to function in this capacity, the Secretary must be notified as soon as possible.

(8) The project must have a training program director who:

(i) Supervises (A) the processing of student applications and the selection of students, (B) the maintenance of a complete inventory of all training equipment available to the program, and (C) the scheduling of classes and assignment of instructors, insuring that the required equipment and materials are available at each class;

(ii) Assists in instruction, as appropriate, and in the coordination of the examination and evaluation of students, including the preparation of assessment materials;

(iii) Counsels students on an individual basis;

(iv) Serves as liaison between students, program staff, and the sponsoring institution and its affiliates; and

(v) Prepares the program budget.

(9) The project must establish and use uniform student selection criteria.

(10) The project must maintain a record of the participation in the program and the level of competence attained by each student.

(11) The grantee must provide the students with a statement of satisfactory completion of the course.

(b) *Specific requirements.* In addition to the requirements of paragraph (a) of this section, projects for the training of emergency medical technicians (ambulance and paramedic), emergency nursing personnel, or emergency physicians must also meet the following specific requirements, as appropriate:

(1) *Projects for the training of emergency medical technicians-ambulance.* The project must either:

(i) Meet the guidelines prescribed by the "Basic Training Course for Emergency Medical Technicians" (Second Edition) 1977, U.S. Department of Transportation, NHTSA, which is incorporated by reference and made a part of these regulations. Copies of this document may be obtained from the Superintendent of Documents, Government Printing Office, Washington, D.C. 20402; or

(ii) Demonstrate that at least 75 percent of the graduates of the program either pass the National Registry of Emergency Technicians Examination within six months after graduation or meet applicable State requirements which are determined by the Secretary to equal or exceed Department of Transportation guidelines.

(2) *Projects for the training of emergency medical technicians-paramedic.* (i) The training program must prepare students to meet the performance standards contained in Appendix A of the "National Training Course Guide for Emergency Medical Technicians-Paramedic," which is referred to in these regulations as the "Course Guide," developed by the Department of Transportation's National Highway Traffic Safety Administration, which is hereby incorporated by reference and made a part of these regulations. Copies of this document (Stock Number 050 003 00279-8) may be obtained from the Superintendent of Documents, Government Printing Office, Washington, D.C. 20402, at the cost of $2.50.

(ii) The course goals by module and course content of the training program must conform to those outlined in

Appendices B and C of the Course Guide.

(iii) The clinical experience must be based at a school of medicine or osteopathy, hospital or other health care delivery facility which can assure sufficient medical supervision and clinical experience as set forth in the Course Guide. A substantial portion of this experience must be in as ALS facility or in an associate ALS facility which has appropriate resources.

(iv) Only individuals who have a high school diploma or equivalent degree may be enrolled in the training program.

(v) The project must have a medical director. The medical director may be the training program director.

(vi) The project must provide for the continuing education of the faculty in content areas related to their educational responsibilities.

(3) *Projects for the training of emergency nursing personnel.* (i) The project must prepare nurses to meet the "Standards of Emergency Nursing Practice" developed by the American Nurses' Association and the Emergency Department Nurses' Association (ANA Publication Code MS-5), or equivalent standards as determined by the Secretary. This document is hereby incorporated by reference and made a part of these regulations. Copies can be obtained from the Emergency Department Nurses' Association, 666 North Lake Shore Drive, Chicago, Illinois 60611.

(ii) The training program director must be a registered nurse with education in emergency patient care, at least one year of experience in emergency services, and with experience in baccalaureate nursing education.

(iii) The project must have a medical advisor who is an emergency physician and will advise the training program director regarding medical control and supervision in the clinical environment.

(iv) Only individuals who are licensed registered nurses or are full-time students in a school of nursing and have completed courses in basic patient care, maternal and child health, mental health and medical-surgical nursing may be enrolled.

(4) *Projects for the residency training of emergency physicians.* (i) The training program must be a graduate medical education program in emergency medicine which is either approved or provisionally approved by the American Osteopathic Association or is endorsed or provisionally endorsed by, or has a letter granting permission to recruit residents, from the Liaison Residency Endorsement Committee in Emergency Medicine.

(ii) The training program must provide training designed to familiarize the resident with:

(A) The functions of an emergency medical services system as listed in section 1206(b)(4)(C) of the Act;

(B) The interaction among the organizations and agencies which deliver emergency health services; and

(C) The management and organization of an emergency unit.

(iii) The grantee must sponsor at least two other types of approved graduate medical education programs (e.g., internal medicine, general surgery, or family practice).

(iv) The training program may be up to three years in length, but no less than two years. In the case of a three-year program, the first year must include general clinical experience. The last two years must include increased training and responsibilities in the emergency department with the resident assigned to other specialties to learn specific skills applicable to emergency care.

(v) The training program must be conducted in an emergency unit which is organized as a major service within an ALS or associate ALS facility.

(vi) The project must have a medical director who works full-time in an emergency unit.

(vii) The project must have a training program director. The training program director may also be the medical director.

(viii) The project must provide for the continuing education of the faculty in content areas related to their educational responsibilities.

(ix) The grantee may give stipends from grant funds only to residents who plan to specialize or work in the practice of emergency medicine.

(5) *Projects for the continuing education of physicians.* (i) Only individuals who are emergency physicians or physicians actively involved in an emergency medical services system may be enrolled.

(ii) Training must fulfill the requirements for continuing medical education credit of the American Osteopathic Association or meet Category 3 requirements of either the Liaison Committee on Continuing Medical Education or the American Medical Association.

§ 57.2107 How will applications be evaluated?

(a) After consultation with the National Advisory Council on Health Professions Education established by section 702 of the Act, the Secretary will approve projects which best promote the training purposes of section 789 of the Act. The Secretary will take into consideration among other factors:

(1) The degree to which the proposed project adequately provides for meeting the requirements in § 57.2106.

(2) The administrative and managerial capability of the applicant to carry out the proposed project.

(3) The local and national needs which the proposed project is designed to serve.

(4) The soundness of the fiscal plan for assuring effective utilization of grant funds.

(5) The potential of the project to continue on a self-sustaining basis after the project period.

(b) In determining the priority for funding of applications approved under paragraph (a) of this section, the Secretary will consider:

(1) The relative merit of the proposed project based upon the factors in paragraph (a) of this section; and

(2) The extent to which the proposed project contains any of the following elements:

(i) All training programs in the proposed project provide clinical experience in emergency medical services systems receiving assistance under Title XII of the Act.

(ii) All training programs in the proposed project emphasize interdisciplinary approaches to emergency medical services.

(iii) In the case of projects for the training of emergency medical technicians-paramedic, the proposed project is sponsored by an educational entity which grants academic credit for the training.

(iv) In the case of projects for the training of emergency physicians, the project is designed to train emergency physicians while developing general emergency physician training resources. To meet this requirement, the applicant must:

(A) Be, or be affiliated with, a school of medicine, or osteopathy with an administrative unit which is responsible for educational programs in emergency medicine, propose educational programs designed to improve the capabilities of physicians to provide emergency medical services in emergency medical services system; and

(B) Be involved in more than one of the following phases of emergency medical education: undergraduate, graduate or continuing education.

§ 57.2108 How long does grant support last?

(a) The notice of grant award specifies the length of time the Secretary intends to support the project without requiring the project to recompete for funds. This

period, called the project period, will not exceed five years.

(b) Generally, the grant will initially be funded for one year and subsequent continuation awards will also be for one year at a time. A grantee must submit a separate application to have the support continued for each subsequent year. Decisions regarding continuation awards and the funding levels of these awards will be made after consideration of such factors as the grantee's progress and management practices, and the availability of funds. In all cases, continuation awards require a determination by the Secretary that continued funding is in the best interest of the Federal Government.

(c) Neither the approval of any application nor the award of any grant commits or obligates the Federal Government in any way to make any additional, supplemental, continuation or other award with respect to any approved application or portion of an approved application.

(d) Any balance of federally obligated grant funds remaining unobligated by the grantee at the end of a budget period may be carried forward to the next budget period, for use as prescribed by the Secretary, provided a continuation award is made. If at any time during a budget period it becomes apparent to the Secretary that the amount of Federal funds awarded and available to the grantee for that period, including any unobligated balance carried forward from prior periods, excees the grantee's needs for the period, the Secretary may adjust the amounts awarded by with withdrawing the excess. A budget period is an interval of time (usually 12 months) into which the project period is divided for funding and reporting purposes.

§ 57.2109 How is the amount of the grant award determined?

The Secretary will determine the amount of the award to the grantee on the basis of his or her estimate of the sum necessary during the budget period to cover the costs of the project. In addition, in determining the amount of stipend support to be made available to residents who plan to specialize or work in the practice of emergency medicine, the amount of any stipend must be limited to that portion of the annual amount normally paid to other residents by the applicant which the Secretary determines, on the basis of the documentation required in the application, cannot reasonbly be paid from other available funds, including the incomes derived from the residents' services.

§ 57.2110 For what purposes may grant funds be spent?

(a) A grantee shall only spend funds it receives under the subpart according to the approved application and budget, the authorizing legislation, terms and conditions of the grant award, applicable cost principles specified in Subpart Q of 45 CFR Part 74, and these regulations.

(b) Grantees may not spend grant funds for sectarian instruction or for any religious purpose.

§ 57.2111 What health planning requirements must be met?

A grant may be made under this subpart only if the applicable requirements of Title XV of the Act relating to review and approval by the appropriate health systems agency have been met.

§ 57.2112 What additional Department regulations apply to grantees?

Several other regulations apply to grants under this subpart. These include, but are not limited to:

42 CFR Part 50 PHS grant appeals process
45 CFR Part 16 Department grant appeals process
45 CFR Part 46 Protection of human subjects
45 CFR Part 74 Administration of grants
45 CFR Part 75 Informal grant appeals procedures (indirect cost rates and other cost allocations)
45 CFR Part 80 Nondiscrimination under programs receiving Federal assistance from HHS—Implements Title VI of the Civil Rights Act of 1964
45 CFR Part 81 Practice and procedure for hearings under Part 80
45 CFR Part 83 Nondiscrimination on the basis of sex in the admission of individuals to training programs
45 CFR Part 84 Nondiscrimination on the basis of handicap in Federally-assisted education programs
45 CFR Part 86 Nondiscrimination on the basis of sex in Federally-assisted education programs
45 CFR Part 91 [1] Nondiscrimination on the basis of age in Department programs or activities receiving Federal financial assistance

§ 57.2113 What other audit and inspection requirements apply to grantees?

Each grantee must, in addition to the requirements of 45 CFR Part 74, meet the requirements of section 705 of the Act concerning audit and inspection.

[1] When issued.

§ 57.2114 Additional conditions.

The Secretary may impose additional conditions on any grant award before or at the time of any award if he or she determines that these conditions are necessary to assure or protect the advancement of the approved activity, the interest of the public health, or the conservation of grant funds.

[FR Doc. 80-28217 Filed 9-11-80; 8:45 am]
BILLING CODE 4810-83-M

FEDERAL EMERGENCY MANAGEMENT AGENCY

44 CFR Part 67

[Docket No. FEMA-5800]

National Flood Insurance Program; Final Flood Elevation Determination; New Jersey

AGENCY: Federal Insurance Administration, FEMA.

ACTION: Deletion of final rule for the Township of Lopatcong, Warren County, New Jersey.

SUMMARY: The Federal Insurance Administration has erroneously published the final flood elevation determination for the Township of Lopatcong, New Jersey. This notice will serve to delete that publication. Following an engineering analysis and review, a revised notice of proposed flood elevation determination will be issued.

EFFECTIVE DATE: September 12, 1980.

FOR FURTHER INFORMATION CONTACT: Mr. Robert G. Chappell, Federal Emergency Management Agency, Federal Insurance Administration, National Flood Insurance Program, (202) 426-1460 or Toll Free Line (800) 424-8872, (in Alaska and Hawaii call Toll Free Line (800) 424-9080), Washington, D.C. 20472.

SUPPLEMENTARY INFORMATION: As a result of a recent engineering analysis, the Federal Insurance Administration has determined that the notice of final flood elevation determination for the Township of Lopatcong, New Jersey, published at 45 FR 51804, on August 5, 1980, should be deleted. After a technical evaluation, a revised notice of proposed flood elevations will be issued, with a ninety-day period specified for comments and appeals.

(National Flood Insurance Act of 1968 (Title XIII of Housing and Urban Development Act

of 1968), effective January 28, 1969 (33 FR 17804, November 28, 1968), as amended; 42 U.S.C. 4001–4128; Executive Order 12127, 44 FR 19367; and delegation of authority to Federal Insurance Administrator)

Issued: August 26, 1980.

Gloria M. Jimenez,

Federal Insurance Administrator.

[FR Doc. 80-28147 Filed 9-11-80; 8:45 am]

BILLING CODE 6718-03-M

FEDERAL COMMUNICATIONS COMMISSION

47 CFR Part 83

[Gen. Docket No. 80-87; FCC 80-360]

Amending the Commission's Rules To Implement the Provisions of Chapter 4 of the 1974 Safety Convention Pertaining to Radio Equipment Required on Compulsorily Fitted Vessels; Correction

AGENCY: Federal Communications Commission.

ACTION: Final rule, correction (Errata).

SUMMARY: This action corrects some typographical errors within the final regulations on radiotelephone distress frequency watch receivers published on July 10, 1980 (45 FR 46409).

EFFECTIVE DATE: August 15, 1980.

ADDRESSES: Federal Communications Commission, Washington, D.C. 20554.

FOR FURTHER INFORMATION CONTACT: Robert McIntyre, Private Radio Bureau, (202) 632-7025.

SUPPLEMENTARY INFORMATION: In the matter of amendment of Parts 81 and 83 of the Commission's Rules to implement the provisions of Chapter 4 of the 1974 Safety Convention pertaining to radio equipment required on compulsorily fitted vessels, Gen. Docket No. 80-87.

Released: August 28, 1980.

In the Report and Order in the above-captioned matter, FCC 80-360, released July 10, 1980, at 45 FR 46409, in the Appendix on page 46415, § 83.559(b)(5)(iv) and (v) were incorrectly numbered. They are changed to read correctly § 83.559(b)(5)(iii) and (iv) respectively. Within § 83.559(b)(5)(iv) the reference to paragraph (a)(5)(iv) is changed to read correctly (b)(5)(iii).

Federal Communications Commission.

William J. Tricarico,

Secretary.

[FR Doc. 80-28184 Filed 9-11-80; 8:45 am]

BILLING CODE 6712-01-M

INTERSTATE COMMERCE COMMISSION

49 CFR Parts 1300,1303, 1304, 1306, 1307, 1308, 1310

[Ex Parte No. 370]

Tariff Improvement

AGENCY: Interstate Commerce Commission.

ACTION: Final rules.

SUMMARY: The Commission is adopting new rules which will (1) permit tariffs to express rates and rate changes as percentages; (2) declare rate increases unlawful which result from improperly-symbolized tariff changes; (3) prescribe standard titles and item numbers for commonly-published tariff rules; and (4) allow tariffs to identify commodities and point locations by certain uniform standard code designations. This action is being taken to improve, simplify and modernize tariffs by reducing their size, complexity and cost; by standardizing their formats; and by promoting greater compatibility with electronic technology.

DATES: Except for §§ 1300.33, 1303.38, 1304.44, 1306.19, 1307.17, 1308.14, 1308.111 and 1310.35, which will not become effective until June 30, 1981, the rules adopted in this proceeding are effective October 14, 1980.

FOR FURTHER INFORMATION CONTACT: Martin E. Foley (202) 275-7348.

SUPPLEMENTARY INFORMATION: This proceeding was instituted by a notice of proposed rulemaking, published in the Federal Register on October 18, 1979 (44 FR 60122), to consider our proposals for tariff improvement. In response to the invitation in our notice, more than 100 comments were received, representing all segments of the surface transportation community: carriers and carrier organizations, shippers and shipper associations, traffic consultants, civic organizations, port authorities and Federal agencies.

The proposed regulations, as revised and adopted after analysis and evaluation of the comments, are designed not only to improve, simplify and modernize tariffs, but to ensure consumer protections in the face of Commission budgetary and personnel constraints and to afford carriers the tariff flexibility they will need to effectively compete in what we foresee as a substantially less-regulated environment in the future. Specifically, the adopted rules will: (1) permit carriers to express rates as percentages and to file "percentage supplements" to reflect general increases or reductions in their rates;

(2) declare rate increases unlawful and not collectible which result from improperly-symbolized tariff changes;

(3) prescribe standard titles and item numbers for commonly-published tariff rules; and

(4) allow tariffs to identify commodities and point locations by uniform standard code designations. (NOTE: The rules adopted to govern the identification of point locations (§§ 1300.33, 1303.38, 1304.44, 1306.19, 1307.17, 1308.14, 1308.111 and 1310.35) will not become effective until June 30, 1981.)

The Commission is also directing its staff to conduct further study in connection with additional recommendations for tariff improvement that were suggested by the commentors.

Complete copies of the decision in this proceeding can be obtained from the Office of the Secretary, Interstate Commerce Commission, Washington, D.C. 20423.

Accordingly, Chapter X of Title 49 of the Code of Federal Regulations is amended as follows:

1. By revising § 1300.4(i)(1) to read as follows:

§ 1300.4 Contents of tariffs.

Tariffs shall contain, in the order named:

* * * * *

(i) *Rates.* (1) A statement of the rates and the places from, to, and between which they apply, arranged in a simple and systematic manner. At least one of the rates shall be explicitly stated (per 100 pounds, ton, car or other unit) in dollars and cents in lawful money of the United States. Other rates in the tariff may be expressed as percentages of the stated rates, provided that the tariff clearly explains how to compute the other rates, including how to dispose of fractions. A rate may not be expressed as a fraction or multiple of another rate or as a percentage of another rate which is itself expressed as a percentage.

2. By adding § 1300.9(n) to read as follows:

§ 1300.9 Amendments and supplements.

* * * * *

(n) *Percentage supplements to provide general rate changes.* (1) A supplement, which expresses the amount of change as a percentage by which the tariff's explicitly-stated rates and charges are to be increased or reduced, may be filed to any tariff to provide a general change in the level of all or substantially all rates and charges, or all or substantially all the rates and charges in a specific category in the tariff.

(2) The supplement shall clearly explain its application and shall state where any exceptions to its application are listed. It shall also show how to compute the increased or reduced rates from the percentages shown; how to dispose of fractions; and how to compute multiple-factor rates made by the use of arbitraries or other means. Only matter concerning the percentage change may be published in the supplement.

(3) A percentage supplement shall bear an expiration date on its title page which shall be within two years of its effective date. The title page shall also describe the nature of the changes effected by the supplement. Only one percentage supplement may be in effect at one time.

(4) Percentage supplements may change tariff matter which will not have been in effect for 30 days. Subsequent amendments filed prior to the effective date of the percentage supplement may change or cancel, on lawful notice, matter changed by the percentage supplement before that change has been in effect for 30 days. Tariff amendments containing explicitly-stated rates or charges becoming effective during the effectiveness of a percentage supplement shall state whether or not they are subject to the provisions of the percentage supplement.

3. By deleting the first two sentences and the first word of the third sentence of § 1310.7(a)(2), and replacing them with the following:

§ 1310.7 Statement of rates (Rule 7).

(a) *Rates must be clear and explicit.*

* * * * *

(2) The rates and the places from, to, and between which they apply shall be arranged in a simple and systematic manner. At least one of the rates shall be explicitly stated in dollars and cents in lawful money of the United States. Other rates in the tariff may be expressed as percentages of the stated rates, provided the tariff clearly explains how to compute the other rates and how to dispose of fractions. A rate may not be expressed as a fraction or multiple of another rate or as a percentage of a rate which is itself expressed as a percentage. All explicitly-stated rates * * *

* * * * *

4. By deleting § 1310.7(c) which now prohibits the expression of class rates as percentages, fractions or multiples of another rate.

5. By adding § 1310.10(i) to read as follows:

§ 1310.10 Amendments (Rule 10).

* * * * *

(k) *Percentage supplements to provide general rate changes.* (1) A supplement which expresses the amount of change as a percentage by which the tariff's explicitly-stated rates and charges are to be increased or reduced may be filed to any tariff to provide a general change in the level of all or substantially all the rates and charges, or all or substantially all the rates and charges in a described category in the tariff.

(2) The supplement shall clearly explain its application and shall state where any exceptions to its application are listed. It shall also show how to compute the increased or reduced rates from the percentages shown; how to dispose of fractions; and how to compute multiple-factor rates made by the use of arbitraries or other means. Only matter concerning the percentage change may be published in the supplement.

(3) A percentage supplement shall bear an expiration date on its title page which shall be within two years of its effective date. The title page shall also describe the nature of the changes effected by the supplement. Only one percentage supplement may be in effect at one time.

(4) Percentage supplements may change tariff matter which will not have been in effect for 30 days. Subsequent amendments filed prior to the effective date of the percentage supplement may change or cancel, on lawful notice, matter changed by the percentage supplement before that change has been in effect for 30 days. Tariff amendments containing explicitly-stated rates or charges becoming effective during the effectiveness of a percentage supplement shall state whether or not they are subject to the provisions of the percentage supplement.

6. By adding the following new paragraph to be designated, respectively, as § 1300.2(a)(4), § 1303.4(d)(3), § 1304.2(c), § 1306.5(b)(2), § 1307.5(r)(1), § 1308.2(a) and § 1310.10(f)(5):

Changes resulting in increases which are not identified by proper symbols shall be considered unlawfully published and filed and therefore invalid and not collectable. In such cases, the lawful provisions will be those which were purportedly superseded. Invalid provisions shall be canceled by publications which shall bring forward, or properly amend, provisions which have remained in effect by reason of invalid publication.

7. By revising § 1300.4(h)(2) to read as follows:

§ 1300.4 Content of tariffs.

* * * * *

(h) *Rules governing the tariffs.*

* * * * *

(2)(i) Each rule or regulation shall be given a separate number. Where the following subjects are to be provided for in tariffs, the rules covering them shall bear the titles indicated and be assigned the item numbers indicated. If a title includes subjects not treated in the rule, those subjects may be eliminated from the title.

Item and Title

5 Description of Governing Classification, Exceptions and Rules Tariffs
10 Station List and Conditions
15 Explosives, Dangerous Articles
20 Reference to Tariffs, Items, Notes, Rules, etc.
25 Terminal or Transit Privileges or Services
30 Perishable Freight
35 Transfer Between Connecting Carriers
40 Consecutive Numbers
45 Capacities and Dimension of Cars
50 Combination Rates
55 Substitution of Motor Service for Rail or Water Service
60 National Service Order Tariff
65 Proportional Rates—application
70 Alternation
75 Method of Canceling Items
80 Intermediate Application—origin
85 Intermediate Application—destination
90 Fourth Section Authorities
100 Method of Denoting Reissued Matter in Supplements
105 Straight or Mixed CL Application

(ii) A carrier or agent may assign a title and number of its choosing for matter not listed in subparagraph 2(i), provided the title and number chosen do not conflict with those listed.

(iii) If a title in paragraph (h)(2)(i) of this section does not properly identify a rule's content, qualifying words, phrases or subtitles may be added. When qualifying words or phrases are used, the precribed title shall be followed by a dash and the added words, for example: "Alternation—C. L. Rates—Varying Minimum Weights." Subtitles or references to excepted classification rules shall follow the title.

(iv) When it is necessary or practicable to split a rule into two or more parts, the prescribed item number may be subdivided. The first part of the rule (which shall contain the general or master rule, if any) must be assigned the prescribed item number without a numerical suffix. Each subdivision shall be assigned a compound number, which shall be constructed by use of the prescribed number followed by a decimal, or a hyphen then a new series of numbers, for example: item 70.1, 70.2, 70.3, etc., or 70–1, 70–2, 70–3, etc., in numerical sequence. Each subdivision must show the prescribed title.

(v) Exceptions to a rule may be included in the general rule or arranged in items immediately following the rule to which exception is taken. In the latter case, exception items are to use the standard item number of the general rule followed by a suffix—for example, exceptions to item 85 would use items 85.1, 85.2, etc., or 85–1, 85–2, etc.

(vi) Tariffs subject to the provisions contained in § 1300.67 are not subject to the requirements of this subparagraph.

8. By revising § 1307.5(l) to read as follows:

§ 1307.5 Form and content of schedules.

* * * * *

(l) *Rules.* (1) Rules and other provisions affecting rates and charges shall be published following the index of points. Each rule or regulation shall be given a separate item number. Where the subjects shown in § 1310.4(h)(4)(i) of this chapter are to be provided for in schedules, the rules covering them shall bear the titles and be assigned the item numbers listed in § 1310.4(h)(4)(i) of this chapter.

(2) A carrier may assign a title and number of its choosing for matter not listed in § 1310.4(h)(4)(i) of this chapter, provided the title and number chosen do not conflict with those listed.

(3) If a title listed in § 1310.4(h)(4)(i) of this chapter does not properly identify a rule's content, qualifying words, phrases or subtitles may be added. When qualifying words are used, the prescribed title shall be followed by a dash and the added words, for example: "Bills of Lading—Order Notify." Subtitles or references to excepted classification rules shall follow the title.

(4) When it is necessary or practicable to split a rule into two or more parts, the prescribed item number may be subdivided. The first part of the rule (which shall contain the general or master rule), if any must be assigned the prescribed item number without a numerical suffix. Each subdivision must be assigned a compound number, which shall be constructed by use of the prescribed number followed by a decimal or a hyphen, then a new series of numbers—for example, item 390.1, 390.2, 390.3 etc., or 390–1, 390–2, 390–3, etc., in numerical sequence. Each subdivision must show the prescribed title.

(5) Exceptions to a rule may be included in the general rule or arranged in items immediately following the rule to which exception is taken. In the latter case, exception items are to use the standard item number of the general rule followed by a suffix—for example, exceptions to item 510 would use items 510.1, 510.2, etc., or 510–1, 510–2, etc.

* * * * *

§ 1309.1 [Amended]

9. By adding the following sentence at the end of § 1309.1: "Rules contained in tariffs shall be numbered and titled using the system prescribed either in § 1300.4(h)(2)(i) of this chapter or in § 1310.4(h)(4)(i) of this chapter."

10. By adding the following subparagraph (4) to § 1310.4(h):

§ 1310.4 Form, size, and printing (rule 4).

* * * * *

(h) * * *

(4)(i) Each rule or regulation shall be given a separate number. Where the following subjects are to be provided for in tariffs, the rules covering them shall bear the titles indicated and be assigned the item numbers indicated. If a title includes subjects not treated in the rule, those subjects may be eliminated from the title.

Item and Title

100 Governing Publications
100 to 119 Definitions
150 Application of Tariff, Schedule
160 to 290 Application of Rates
299 Absorptions
300 Advancing Charges
305 Advertising on Carrier Equipment
310 Advertising or Premiums
315 to 335 Allowances
340 Arbitraries or Differentials
345 Arrival Notice and Undelivered Freight
350 Assembling or Distributing Freight
360 Bills of Lading
370 Bulk Freight
381 Cancellation of Items
382 Cancelling Original and Revised Pages, Except the Title Page
390 Capacity Loads
405 Carrier Trade Names
407 to 419 Claims, Loss and Damage
420 Classification of Articles—General
421 Classification by Analogy
422 Classication of Combined Articles
423 Classification of Loose Articles
424 Classification of Parts or Pieces of a Complete Article
426 Classification of Reconditioning Bags
428 Classification of Various Documents Included with Freight
430 COD shipments
435 Collection of Charges
440 Commercial Zones
455 Consecutive Numbers
460 Consolidation of Shipments
465 Containers
470 Control and Exclusive Use of Vehicles
480 Customs or In-Bond Freight
490 Density
500 Detention—Vehicles With Power Units
501 Detention—Vehicles Without Power Units
502 Detention—LTL or AQ Shipments
503 Detention—Prearranged Scheduling
510 Distances
520 Equipment
530 Expedited Service
535 Expiration Dates

Item and Title

540 Explosives and Other Dangerous Articles
550 Export, Import, Coastwise or Intercoastal Freight
560 Extra Labor
565 Fractions
566 Handling Freight Not Adjacent to Vehicle
568 Heavy or Bulky Freight
570 Impracticable Operations
575 Light or Bulky Freight
578 Loading by Consignor—Unloading by Consignee
580 Marking or Tagging Freight
595 Maximum Charge
600 Meat Hooks or Racks
610 Minimum Charge
640 Mixed Shipment—LTL
645 Mixed Shipment—TL or Vol.
647 Notification Prior to Delivery
650 Operating Rights
660 Order—Notify Shipments.
670 Over Dimension Freight
675 Over Weight Shipments
680 to 689 Packing or Packaging
710 Pallets, Platforms or Skids
720 Payment of Charges
730 Peddler Truck Shipments
740 Permits, Special
750 Pickup or Delivery Service
753 Pickup or Delivery Service—Private Residence
754 Pickup or Delivery Service—Sundays or Holidays
755 Pickup or Delivery Service—Saturdays
756 Pickup or Delivery Service—Saturday, Sundays, or Holidays
765 Precedence of Rates
766 Precedence of Rules
770 Prepayment
780 Prohibited or Restricted Articles
784 Proof of Delivery
800 Proportional Rates
810 Protective Service
820 Reconsignment or Diversion
830 Redelivery
845 Reference to Tariffs, Schedules
846 Reissued Matter, Method of Treating
848 Released Value
850 Reporting Charge
860 Returned, Undelivered Shipments
880 Sealing of Trucks
881 Section 10721 Tenders
883 Shipments Tendered as a Truckload
885 Single Shipment Pickup
887 Sorting or Segregating
890 Special Services
900 Stopoffs
910 Storage
920 Substitution of Service
940 Terminal Areas
950 Terminal Charges at Ports
957 Tolls
959 Transfer of Lading
960 Transfer of Service
970 Transit Privileges or Services
980 Unnamed Points
985 Vehicle Furnished But Not Used
990 Weighing and Weights
992 Weight Verification
995 Weights—Gross Weights and Dunnage
997 Weights—Minimum Weight Factor

(ii) A carrier or agent may assign a title and number of its choosing for matter not listed in paragraph (h)(4)(i) of

this section, provided the title and number chosen do not conflict with those listed.

(iii) If a title in paragraph (h)(4)(i) does not properly identify a rule's content, qualifying words, phrases or subtitles may be added. When qualifying words or phrases are used, the prescribed title shall be followed by a dash and the added words, for example: "Bills of Lading—Order Notify." Subtitles or references to excepted classification rules shall follow the title.

(iv) When it is necessary or practicable to split a rule into two or more parts, the prescribed item number may be subdivided. The first part of the rule (which shall contain the general or master rule, if any) must be assigned the prescribed item number without a numerical suffix. Each subdivision must be assigned a compound number, which shall be constructed by use of the prescribed number followed by a decimal or hyphen, then a new series of numbers—for example, item 390.1, 390.2, 390.3, etc., or item 390–1, 390–2, 390–3, etc., in numerical sequence. Each subdivision must show the prescribed title.

(v) Exceptions to a rule may be included in the general rule or arranged in items immediately following the rule to which exception is taken. In the latter case, exception items are to use the standard item number of the general rule followed by a suffix—for example, exceptions to item 568 would use items 568.1, 568.2, etc., or 568–1, 568–2, etc.

(iv) Tariffs subject to the provisions contained in § 1310.33 are not subject to the requirements of this subparagraph.

§§ 1300.34, 1304.45, 1307.18, 1308.15, 1308.112, 1310.36 [Added]

11. By adding the following new sections to be designated respectively as §§ 1300.34, 1304.45, 1307.18, 1308.15, 1308.112 and 1310.36, each to be entitled "standard codes for commodity identification."

§ —— Standard codes for commodity identification.

(a) *Definition.* As used in this part, the term "standard transportation commodity code" (STCC) means the standard transportation commodity codes assigned by the Association of American Railroads as contained in tariffs filed with the Commission.

(b) *Use.* Standard transportation commodity codes may be used instead of, or in addition to, the naming of commodities in tariffs or schedules. In the event that a tariff code description would be at variance with its accompanying named-commodity description, the presumption is that the named commodity description is accurate, and that the code description is inaccurate. This presumption may be rebutted by a showing of clear evidence of the commodity actually transported. Tariffs or schedules using the codes shall contain, or refer to a tariff publication which contains, the code assignments. Carriers do not need to be shown as participants in the code assignment tariff, and any tariff or schedule may refer to it. The standard transportation commodity codes are the only codes, standing alone, that may be used to identify commodities.

(c) *Listing.* When commodity codes are used in lieu of named commodities, and where the regulations in this part require commodity names to be published in alphabetical order, the standard transportation commodity codes shall be published in numerical order.

§§ 1300.33, 1303.38, 1304.44, 1306.19, 1307.17, 1308.14, 1308.111 and 1310.35 [Added]

12. By adding the following new sections to be designated respectively as §§1300.33, 1303.38, 1304.44, 1306.19, 1307.17, 1308.14, 1308.111 and 1310.35, each to be entitled "Standard Codes for Points Identification."

§ —— Standard codes for points identification.

(a) *Definition.* As used in this part, the term "standard codes for points identification" means the codes assigned to points (places) by the Federal Information Processing Standards Publication 55 (FIPS PUB 55), issued by the National Bureau of Standards, U.S. Department of Commerce, and as contained in tariffs filed with the Commission.

(b) *Use.* Standard codes for points identification may be used instead of, or in addition to, the naming of points in tariffs or schedules. The standard codes for points identification are the only codes, standing alone, that may be used to identify points and places.

(c) *Listing.* When standard codes for points identification are used in lieu of named points, and if the regulations in this part require the point (place) names to be published in alphabetical order, the standard codes for point identification shall be published in alpha-numerical order—i.e., arranged alphabetically by State code with points within each State sublisted in numerical order.

The rules adopted in this proceeding are promulgated under authority contained in section 553 of the Administrative Procedure Act (5 U.S.C. 553) and section 10762 of the Interstate Commerce Act (49 U.S.C. 10762).

This action will not significantly affect either the quality of the human environment or conservation of energy resources.

Dated: August 14, 1980.

By the Commission. Chairman Gaskins, Vice Chairman Gresham, Commissioners Stafford, Clapp, Trantum, Alexis, and Gilliam. Vice Chairman Gresham dissenting in part with a separate expression. Commissioner Stafford dissenting in part with a separate expression.

Agatha L. Mergenovich,

Secretary.

Vice Chairman Gresham, dissenting in part:

Adoption of the FIPS PUB 55 as the standard permissible points code for tariffs is premised on its anticipated widespread future use and adaptation to the needs of transportation. However, the SPLC has been proven its worth and flexibility. While the FIPS PUB 55 might require costly conversion for users and future adjustments in the code itself, the adoption of the SPLC as the standard permissible points code would create no such problems. The FIPS PUB 55 can always be used parenthetically with named points. If it becomes more prevalent in transportation uses in the future, its adoption as the standard code can be subsequently examined without the variables which seriously question the value of mandating its use at this time.

Commissioner Stafford, dissenting in part:

Commissioner Stafford dissented in Part I of the report because he did not believe that section 10762(a)(2) of the Interstate Commerce Act permits the Commission to allow carriers to express rates as percentages of an initial filing.

[FR Doc. 80-28229 Filed 9-11-80; 8:45 am]
BILLING CODE 7035-01-M

DEPARTMENT OF THE INTERIOR

Fish and Wildlife Service

50 CFR Part 32

Hunting; National Wildlife Refuges in Florida, Georgia, and South Carolina

AGENCY: Fish and Wildlife Service.

ACTION: Special regulations.

SUMMARY: The Director has determined that the opening to hunting of certain national wildlife refuges in Georgia is compatible with the objectives for which the areas were established, will utilize a renewable natural resource and will provide additional recreational opportunity to the public. This document establishes special regulations effective for the upcoming hunting seasons for white-tailed deer on Okefenokee and Harris Neck National Wildlife Refuges, Georgia.

DATES: September 12, 1980 to June 30, 1981.

FOR FURTHER INFORMATION CONTACT: The Area Manager or appropriate refuge manager at the address or telephone number listed below:

Donald Hankla, Area Manager, U.S. Fish and Wildlife Service, 15 North Laura Street, Jacksonville, Florida 32202, telephone (904) 791-2267.

John R. Eadie, Refuge Manager, Okefenokee National Wildlife Refuge, P.O. Box 117, Waycross, Georgia 31501, telephone (912) 283-2580.

Glenn Carowan, Refuge Manager, Savannah National Wildlife Refuge Complex (Harris Neck, Savannah, Blackbeard Island, Pinckney Island and Wassaw Island Refuges) P.O. Box 8487, Savannah, Georgia 31412, telephone (912) 944-4415.

SUPPLEMENTARY INFORMATION: The Refuge Recreation Act of 1962 (16 U.S.C. 460k) authorizes the Secretary of the Interior to administer such areas for public recreation as an appropriate incidental or secondary use only to the extent that it is practicable and not inconsistent with the primary objectives for which the areas were established. In addition, the Refuge Recreation Act requires: (a) that no area of the National Wildlife Refuge System is used for forms of recreation not directly related to the primary purposes for which the area was established, and (b) that funds are available for the development, operation and maintenance of the permitted forms of recreation.

The recreational use authorized by these regulations will not interfere with the primary purposes for which Okefenokee and Harris Neck National. Wildlife Refuges were established. This determination is based upon consideration of, among other things, the Service's Final Environmental Statement on the Operation of the National Wildlife Refuge System published in November 1976. Funds are available for the administration of the recreational activities permitted by these regulations.

General Conditions

1. Hunting is permitted on Okefenokee and Harris Neck National Wildlife Refuges in accordance with 50 CFR Part 32, State regulations and the following applicable general conditions and special regulations:

2. All hunters must possess a refuge permit to hunt on a national wildlife refuge. Permits are available from the refuge headquarters and/or check stations. Only one permit per hunter is allowed. Permits are nontransferable and must be carried while hunting. Permits may be obtained by either applying in person or by mail. All participants must fill in and return the questionnaire portion of the hunt permit to the refuge manager by the established deadline for the respective hunts.

3. A list of special conditions applicable to individual refuge hunts and a map of the hunt area are available at refuge headquarters. Portions of refuges which are open to hunting are designated by signs and/or delineated on maps.

4. Ingress and egress points for motor vehicles are limited to designated check stations or other specified areas.

5. Persons under age 18 must be under the close supervision of an authorized adult.

6. Dogs are not permitted on refuge areas during hunts.

7. Personal property must be retrieved by owner and removed from the refuge daily, unless otherwise specified.

8. Use of buckshot is prohibited.

9. Portions of refuges open for hunts will be closed to other public use activities during these hunts.

§ 32.32 Special Regulations: Big game for individual wildlife refuges.

Georgia

White-tailed deer may be hunted on the following refuge areas:

Okefenokee National Wildlife Refuge

(1) *Archery hunts:* (a) species permitted: deer, (b) season: Thursdays, Fridays, and Saturdays from September 20 thru October 24, 1980, (c) bag limit: deer—one deer—either sex, (d) permits—no quota, permits available at refuge headquarters in Waycross at refuge sub-headquarters in Folkston or at Stephen C. Foster State Park in Fargo, prior to hunt and during the hunt. Persons entering the hunt area must sign the Register at the entrance upon entering and leaving, (e) Hunters should not park along Georgia State Road 177, but should park along designated Refuge Roads without blocking roadway, (f) Scouting: hunters may scout the area one-half hour before sunrise to one-half hour after sunset beginning September 18, 1980, (g) no one may enter the hunt area prior to one hour before sunrise and all hunters must clear the area by one hour after sunset, (h) big game hunting of deer is permitted on approximately 1,500 acres, (i) deer harvested on the refuge must be reported to refuge personnel within 3—days by filling out required data on the hunt permit and returning it to the refuge office.

Harris Neck National Wildlife Refuge

Special Conditions: (1) *Archery hunts:* (a) species permitted: deer, (b) season: September 20, 1980, (c) bag limit: two deer, (d) sex: antlerless only, (e) permits: 100 permits will be issued by public drawing. (2) *Gun hunts:* (a) species permitted: deer, (b) weapons: shotguns with slugs, (c) seasons: January 10, 1981, (d) bag limit: two deer, (e) sex: antlerless deer, (f) permits: 50 permits will be issued by public drawing. (3) Participants must check-in at headquarters between 4 and 5 a.m. on day of hunt and park in designated areas prior to hunting. (4) Stand hours: during the periods from one-half hour before sunrise until 9 a.m. and from 3:30 p.m. until one-half hour after sunset each day, hunters must remain on their stands. No movement during these hours will be tolerated. (6) The Harris Neck National Wildlife Refuge will be closed to the general public September 20, 1980 and January 10, 1981. (7) Approximately 2,400 acres are within the designated deer hunting area.

The provisions of these special regulations supplement the regulations which govern hunting on wildlife refuge areas generally and which are set forth in Title 50, *Code of Federal Regulations*, Part 32. The public is invited to offer suggestions and comments at any time.

Dated: September 3, 1980.

John C. Oberheu,

Acting Area Manager.

[FR Doc. 80-28228 Filed 9-11-80; 8:45 am]

BILLING CODE 4310-55-M

---

50 CFR Part 32

Hunting; Opening of Pocasse National Wildlife Refuge, S. Dak., to Big Game Hunting

AGENCY: Fish and Wildlife Service, Interior.

ACTION: Special regulation.

SUMMARY: The Director has determined that the opening to big game hunting of Pocasse National Wildlife Refuge is compatible with the objectives for which the areas was established, will utilize a renewable natural resource, and will provide additional recreational opportunity to the public.

DATES: November 29, 1980 through December 7, 1980.

FOR FURTHER INFORMATION CONTACT: Sam Waldstein, Refuge Manager, Sand Lake NWR, Columbia, SD 57433 (605) 885-6320.

SUPPLEMENTARY INFORMATION:

§ 32.32 Special Regulations; Big Game Hunting; for individual wildlife refuge areas.

The Refuge Recreation Act of 1962 (16 U.S.C. 460k) authorizes the Secretary of the Interior to administer such areas for public recreation as an appropriate

incidental or secondary use only to the extent that it is practicable and not inconsistent with the primary objectives for which the area was established. In addition, the Refuge Recreation Act requires (1) that any recreational use permitted will not interfere with the primary purpose for which the area was established; and (2) that funds are available for the development, operation, and maintenance of the permitted forms of recreation.

The recreational use authorized by these regulations will not interfere with the primary purposes for which the Pocasse National Wildlife Refuge was established. This determination is based upon consideration of, among other things, the Service's Final Environmental Statement on the Operation of the National Wildlife Refuge System published in November 1976. Funds are available for the administration of the recreational activities permitted by these regulations.

Big game hunting is permitted on the Pocasse National Wildlife Refuge, South Dakota, only on the areas designated by signs as being open to hunting. These areas comprising 2,400 acres are delineated on maps available at the refuge headquarters and from the Office of the Regional Director, U.S. Fish and Wildlife Service, P.O. Box 25486, Denver Federal Center, Denver, Colorado, 80225. Big game hunting shall be in accordance with all applicable State regulations subject to the following conditions:

1. The open season for hunting deer on the refuge is from November 29, 1980 through December 7, 1980.
2. Hunters will not be allowed to drive on the refuge, but may park their vehicles outside the refuge and hunt on foot.

The provisions of this special regulation supplement the regulations which govern hunting on wildlife refuge areas generally which are set forth in Title 50 Code of Federal Regulations, Part 32. The public is invited to offer suggestions and comments at any time.

The U.S. Fish and Wildlife Service has determined that this document does not contain a major proposal requiring preparation of an Economic Impact Statement under Executive Order 11949 and OMB Circular A-107.

Dated: July 23, 1980.

Sam Waldstein,

Refuge Manager.

[FR Doc. 80-28224 Filed 9-11-80; 8:45 am]

BILLING CODE 4210-55-M

50 CFR Part 32

Hunting; Opening of Pocasse National Wildlife Refuge, S. Dak., to Upland Game Hunting

AGENCY: Fish and Wildlife Service, Interior.

ACTION: Special regulation.

SUMMARY: The Director has determined that the opening to upland game hunting of Pocasse National Wildlife Refuge is compatible with the objectives for which the areas was established, will utilize a renewable natural resource, and will provide additional recreational opportunity to the public.

DATES: November 15, 1980 through December 14, 1980.

FOR FURTHER INFORMATION CONTACT: Sam Waldstein, Refuge Manager, Sand Lake NWR, Columbia, SD 57433 (605) 885-6320.

SUPPLEMENTARY INFORMATION:

§ 32.22 Special Regulations; Upland Game Hunting; for individual refuge areas.

The Refuge Recreation Act of 1962 (16 U.S.C. 460k) authorizes the Secretary of the Interior to administer such areas for public recreation as an appropriate incidental or secondary use only to the extent that it is practicable and not inconsistent with the primary objectives for which the area was established. In addition, the Refuge Recreation Act requires (1) that any recreational use permitted will not interfere with the primary purpose for which the area was established; and (2) that funds are available for the development, operation, and maintenance of the permitted forms of recreation.

The recreational use authorized by these regulations will not interfere with the primary purposes for which the Pocasse National Wildlife Refuge was established. This determination is based upon consideration of, among other things, the Service's Final Environmental Statement on the Operation of the National Wildlife Refuge System published in November 1976. Funds are available for the administration of the recreational activities permitted by these regulations.

Upland game hunting is permitted on the Pocasse National Wildlife Refuge, South Dakota, only on the areas designated by signs as being open to hunting. These areas comprising 2,540 acres are delineated on maps available at the refuge headquarters and from the Office of the Regional Director, U.S. Fish and Wildlife Service, P.O. Box 25486, Denver Federal Center, Denver, Colorado 80225. Upland game hunting shall be in accordance with all applicable State regulations subject to the following conditions:

1. The open season for hunting pheasants on the refuge is from November 15, 1980 through December 14, 1980.
2. Hunters will not be allowed to drive on the refuge, but may park their vehicles outside the refuge and hunt on foot.

The provisions of this special regulation supplement the regulations which govern upland game hunting on wildlife refuge areas generally which are set forth in Title 50 Code of Federal Regulations, Part 32. The public is invited to offer suggestions and comments at any time.

The U.S. Fish and Wildlife Service has determined that this document does not contain a major proposal requiring preparation of an Economic Impact Statement under Executive Order 11949 and OMB Circular A-107.

Dated: July 23, 1980.

Sam Waldstein,

Refuge Manager.

[FR Doc. 80-28223 Filed 9-11-80; 8:45 am]

BILLING CODE 4210-55-M

50 CFR Part 32

Hunting; Opening of Sand Lake National Wildlife Refuge, S. Dak., to Big Game Hunting

AGENCY: Fish and Wildlife Service, Interior.

ACTION: Special regulation.

SUMMARY: The Director has determined that the opening to big game hunting of Sand Lake National Wildlife Refuge is compatible with the objectives for which the area was established, will utilize a renewable natural resource, and will provide additional recreational opportunity to the public.

DATES: November 1, 1980 through December 31, 1980.

FOR FURTHER INFORMATION CONTACT: Sam Waldstein, Refuge Manager, Sand Lake NWR, Columbia, SD 57433 (605) 885-6320.

SUPPLEMENTARY INFORMATION:

§ 32.32 Special Regulations; Big Game Hunting; for individual wildlife refuge areas.

The Refuge Recreation Act of 1962 (16 U.S.C. 460k) authorizes the Secretary of the Interior to administer such areas for public recreation as an appropriate incidental or secondary use only to the extent that it is practicable and not inconsistent with the primary objectives for which the areas was established. In addition, the Refuge Recreation Act requires (1) that any recreational use permitted will not interfere with the primary purpose for which the area was

established; and (2) that funds are available for the development, operation, and maintenance of the permitted forms of recreation.

The recreational use authorized by these regulations will not interfere with the primary purposes for which the Sand Lake National Wildlife Refuge was established. This determination is based upon consideration of, among other things, the Service's Final Environmental Statement on the Operation of the National Wildlife Refuge System published in November 1976. Funds are available for the administration of the recreational activities permitted by these regulations.

Big game hunting is permitted on the Sand Lake National Wildlife Refuge, South Dakota, only on the areas designated by signs as being open to hunting. These areas comprising 20,000 acres are delineated on maps available at the refuge headquarters and from the Office of the Regional Director, U.S. Fish and Wildlife Service, P.O. Box 25486, Denver Federal Center, Denver, Colorado 80225. Big game hunting shall be in accordance with all applicable State regulations subject to the following conditions:

1. The open seasons for hunting deer on the refuge are: (a) Archery season—November 1, 1980 through November 14, 1980 and December 8, 1980 through December 31, 1980. (b) Firearms season (1) Muzzle loading rifles—November 15, 1980 through November 21, 1980. (2) Rifle and other legal firearms—November 22, 1980 through November 25, 1980; November 26, 1980 through November 30, 1980; December 1, 1980 through December 7, 1980.

2. All hunters must exhibit their hunting license, deer tag and vehicle contents to Federal or State Officers upon request.

3. Hunters are allowed to drive in the refuge only at times designated by the refuge manager. A list of the regulations is available at refuge headquarters.

The provisions of this special regulation supplement the regulations which govern hunting on wildlife refuge areas generally which are set forth in Title 50, Code of Federal Regulations, Part 32. The public is invited to offer suggestions and comments at any time.

The U.S. Fish and Wildlife Service has determined that this document does not contain a major proposal requiring preparation of an Economic Impact Statement under Executive Order 11949 and OMB Circular A-107.

Dated: July 23, 1980.

Sam Waldstein,

Refuge Manager.

[FR Doc. 80-28227 Filed 9-11-80; 8:45 am]

BILLING CODE 4210-55-M

50 CFR Part 32

Hunting; Opening of Sand Lake National Wildlife Refuge, S. Dak. to Migratory Game Bird Hunting

AGENCY: Fish and Wildlife Service, Interior.

ACTION: Special regulation.

SUMMARY: The Director has determined that the opening to migratory game bird hunting of Sand Lake National Wildlife Refuge is compatible with the objectives for which the area was established, will utilize a renewable natural resource, and will provide additional recreational opportunity to the public.

DATES: October 4, 1980 through December 28, 1980.

FOR FURTHER INFORMATION CONTACT: Sam Waldstein, Refuge Manager, Sand Lake NWR, Columbia, SD (605) 885-6320.

SUPPLEMENTARY INFORMATION:

§ 32.12 Special Regulations; Migratory Game Birds; for individual wildlife refuge areas.

The Refuge Recreation Act of 1962 (16 U.S.C. 460k) authorizes the Secretary of the Interior to administer such areas for public recreation as an appropriate incidental or secondary use only to the extent that it is practicable and not inconsistent with the primary objectives for which the area was established. In addition, the Refuge Recreation Act requires (1) that any recreational use permitted will not interfere with the primary purpose for which the area was established; and (2) that funds are available for the development, operation, and maintenance of the permitted forms of recreation.

The recreational use authorized by these regulations will not interfere with the primary purposes for which the Sand Lake National Wildlife Refuge was established. This determination is based upon consideration of, among other things, the Service's Final Environmental Statement on the Operation of the National Wildlife Refuge System published in November 1976. Funds are available for the administration of the recreational activities permitted by these regulations.

Migratory game bird hunting is permitted on the Sand Lake National Wildlife Refuge, South Dakota, only on the areas designated by signs as being open to hunting. These areas comprising 275 acres are delineated on maps available at the refuge headquarters and from the Office of the Regional Director, U.S. Fish and Wildlife Service, P.O. Box 25486, Denver Federal Center, Denver, Colorado 80225. Migratory game bird hunting shall be in accordance with all applicable State regulations subject to the following conditions:

1. The open season for hunting geese on the refuge is from October 4, 1980 through December 28, 1980.

2. The open season for hunting ducks and coots on the refuge is from October 4, 1980 through November 23, 1980 and from November 29, 1980 through December 7, 1980.

3. Hunting will be from established blinds only, without cost, with each site restricted to no more than two hunters, on a first come, first served basis. Blind sites and their use are more specifically described on a map and a list of regulations available at refuge headquarters and at each of the hunting sites.

The provisions of this special regulation supplement the regulations which govern hunting on wildlife refuge areas generally which are set forth in Title 50 Code of Federal Regulations, Part 32. The public is invited to offer suggestions and comments at any time.

The U.S. Fish and Wildlife Service has determined that this document does not contain a major proposal requiring preparation of an Economic Impact Statement under Executive Order 11949 and OMB Circular A-107.

Dated: July 23, 1980.

Sam Waldstein,

Refuge Manager.

[FR Doc. 80-28225 Filed 9-11-80; 8:45 am]

BILLING CODE 4210-55-M

50 CFR Part 32

Hunting; Opening of Sand Lake National Wildlife Refuge, S. Dak., to Upland Game Hunting

AGENCY: Fish and Wildlife Service, Interior.

ACTION: Special regulation.

SUMMARY: The Director has determined that the opening to upland game hunting of Sand Lake National Wildlife Refuge is compatible with the objectives for which the area was established, will utilize a renewable natural resource, and will provide additional recreational opportunity to the public.

DATES: December 8, 1980 through December 31, 1980.

FOR FURTHER INFORMATION CONTACT: Sam Waldstein, Refuge Manager, Sand

Lake NWR, Columbia, SD 57433, (605) 885–6320.

SUPPLEMENTARY INFORMATION:

§ 32.22 Special regulations; upland game hunting, for individual wildlife refuge areas.

The Refuge Recreation Act of 1962 (16 U.S.C. 460k) authorizes the Secretary of the Interior to administer such areas for public recreation as an appropriate incidental or secondary use only to the extent that it is practicable and not inconsistent with the primary objectives for which the area was established. In addition, the Refuge Recreation Act requires (1) that any recreational use permitted will not interfere with the primary purpose for which the area was established; and (2) that funds are available for the development, operation, and maintenance of the permitted forms of recreation.

The recreational use authorized by these regulations will not interfere with the primary purposes for which the Sand Lake National Wildlife Refuge was established. This determination is based upon consideration of, among other things, the Service's Final Environmental Statement on the Operation of the National Wildlife Refuge System published in November 1976. Funds are available for the administration of the recreational activities permtited by these regulations.

Upland game hunting is permitted on the Sand Lake National Wildlife Refuge, South Dakota, only on the areas designated by signs as being open to hunting. These areas comprising 20,000 acres are delineated on maps available at the refuge headquarters and from the Office of the Regional Director, U.S. Fish and Wildlife Service, P.O. Box 25486, Denver Federal Center, Denver, Colorado 80225. Upland game hunting shall be in accordance with all applicable State regulations subject to the following conditions:

1. The open season for hunting pheasants on the refuge is from December 8, 1980 through December 31, 1980.

2. Hunters will not be allowed to drive on the refuge, but may park their vehicles outside the refuge and hunt on foot.

The provisions of this special regulation supplement the regulations which govern hunting on wildlife refuge areas generally which are set forth in Title 50 Code of Federal Regulations, Part 32. The public is invited to offer suggestions and comments at any time.

The U.S. Fish and Wildlife Service has determined that this document does not contain a major proposal requiring preparation of an Economic Impact Statement under Executive Order 11949 and OMB Circular A–107.

Dated: July 23, 1980.

Sam Waldstein,

Refuge Manager.

[FR Doc. 80-28226 Filed 9-11-80; 8:45 am]

BILLING CODE 4210-55-M

Proposed Rules

Federal Register
Vol. 45, No. 179
Friday, September 12, 1980

This section of the FEDERAL REGISTER contains notices to the public of the proposed issuance of rules and regulations. The purpose of these notices is to give interested persons an opportunity to participate in the rule making prior to the adoption of the final rules.

DEPARTMENT OF AGRICULTURE

Agricultural Marketing Service

7 CFR Part 948

Irish Potatoes Grown in Colorado—Area No. 2; Proposed Handling Regulation

AGENCY: Agricultural Marketing Service, USDA.

ACTION: Proposed rule.

SUMMARY: This proposed regulation would require fresh market shipments of potatoes grown in Colorado—Area No. 2 to be inspected and meet minimum grade, size and maturity requirements. The regulation should promote orderly marketing of such potatoes and keep less desirable qualities and sizes from being shipped to consumers.

DATE: Comments due October 11, 1980.

ADDRESSES: Comments should be sent to: Hearing Clerk, Room 1077-S, U.S. Department of Agriculture, Washington, D.C. 20250. Two copies of all written comments shall be submitted, and they will be made available for public inspection at the office of the Hearing Clerk during regular business hours.

FOR FURTHER INFORMATION CONTACT: Charles W. Porter, Chief, Vegetable Branch, Fruit and Vegetable Division, AMS, U.S. Department of Agriculture, Washington, D.C. 20250 (202) 447-2615. The Draft Impact Analysis relative to this proposed rule is available on request from the above named individual.

SUPPLEMENTARY INFORMATION: This proposed action has been reviewed under USDA procedures established in Secretary's Memorandum 1955 to implement Executive Order 12044, and has been classified "not significant."

Marketing Agreement No. 97 and Order No. 948, both as amended, regulate the handling of potatoes grown in designated counties of Colorado Area No. 2. It is effective under the Agricultural Marketing Agreement Act of 1937, as amended (7 U.S.C. 601-674). The Colorado Area No. 2 Potato Committee, established under the order, is responsible for its local administration.

This notice is based upon recommendations made by the committee at its public meeting in Monte Vista, Colorado, on August 21, 1980.

The grade, size, maturity, and inspection requirements recommended herein are similar to those issued during past seasons. They are necessary to prevent potatoes of low quality or undesirable sizes from being distributed in fresh market channels. They would also provide consumers with good quality potatoes consistent with the overall quality of the crop and standardize the quality of the potatoes shipped from the production area in order to provide the consumer with a more acceptable product.

Exceptions would be provided to certain of these requirements to recognize special situations in which such requirements would be inappropriate or unreasonable.

Shipments would be permitted to certain special purpose outlets without regard to the grade, size, maturity, and inspection requirements provided that safeguards are met to prevent such potatoes from reaching unauthorized outlets. Certified seed would be exempt because requirements for this outlet differ greatly from those for fresh market. Shipments for use as livestock feed would likewise be exempt since no purpose would be served by regulating such potatoes. Shipments for charity purposes also would be exempt. Also, potatoes for most processing uses are exempt under the legislative authority for this part.

Requirements for export shipments differ from those for domestic markets. While standard quality requirements are desired in foreign markets, smaller sizes are often more acceptable. Therefore, different requirements for export shipments are proposed.

To maximize the benefits of orderly marketing the proposed regulation should become effective on November 1, 1980, when the current regulations expire. Interested persons were given an opportunity to comment on the proposal at an open public meeting held August 21 where it was recommended by the committee. This proposal is similar to regulations in effect for the past season. It is therefore determined that the period allowed for comments will be sufficient under the circumstances and will tend to effectuate the declared purpose of the act.

It is proposed that § 948.382 (44 FR 60977, October 23, 1979) be deleted and a new § 948.384 be added as follows:

§ 948.384 Handling regulation.

During the period November 1, 1980, through October 31, 1981, no person shall handle any lot of potatoes grown in Area No. 2 unless such potatoes meet the requirements of paragraphs (a), (b), and (c) of this section, or unless such potatoes are handled in accordance with paragraphs (d) and (e), or (f) of this section.

(a) *Minimum grade and size requirements.* (1) *Round varieties.* U.S. No. 2, or better grade, 2 inches minimum diameter.

(2) *Russet Burbank.* U.S. No. 2, or better grade, 1⅞ inches minimum diameter.

(3) *All other long varieties except Russet Burbank.* U.S. Commercial, or better grade, 2 inches minimum diameter or 4 ounces minimum weight, or U.S. No. 2 grade, 1⅞ inches minimum diameter.

(4) *All varieties.* Size B, if U.S. No. 1.

(5) *All varieties for export.* 1½ inches minimum diameter.

(b) *Maturity (skinning) requirements.* During September and October minimum maturity requirements shall be:

(1) *For U.S. No. 2 grade.* Not more than "moderately skinned."

(2) *All other grades.* Not more than "slightly skinned."

(c) *Inspection.* (1) No handler shall handle any potatoes for which inspection is required unless an appropriate inspection certificate has been issued with respect thereto and the certificate is valid at the time of shipment. For purposes of operation under this part it is hereby determined pursuant to § 948.40(d) that each inspection certificate shall be valid for a period not to exceed five days following the date of inspection as shown on the inspection certificate.

(2) No handler may transport or cause the transportation by motor vehicle of any shipment of potatoes for which an inspection certificate is required unless each shipment is accompanied by a copy of the inspection certificate applicable thereto and the copy is made available for examination at any time upon request.

(d) *Special purpose shipments.* (1) The grade, size, maturity and inspection requirements of paragraphs (a), (b) and (c) of this section and the assessement requirements of this part shall not be applicable to shipments of potatoes for:

(i) Livestock feed;

(ii) Relief or charity; or

(iii) Canning, freezing, and "other processing" as hereinafter defined.

(2) The grade, size, maturity and inspection requirements of paragraphs (a), (b) and (c) of this section shall not be applicable to shipments of seed pursuant to § 948.6 but such shipments shall be subject to assessments.

(e) *Safeguards.* Each handler of potatoes which do not meet the grade, size, and maturity requirements of paragraphs (a) and (b) of this section and which are handled pursuant to paragraph (d) of this section for any of the special purposes set forth therein shall:

(1) Prior to handling, apply for and obtain a Certificate of Privilege from the committee;

(2) Furnish the committee such reports and documents as requested, including certification by the buyer or receiver as to the use of such potatoes; and

(3) Bill each shipment directly to the applicable processor or receiver.

(f) *Minimum quantity.* For purposes of regulation under this part, each person may handle up to but not to exceed 1,000 pounds of potatoes without regard to the requirements of paragraphs (a), (b) and (c) of this section, but this exception shall not apply to any shipment which exceeds 1,000 pounds of potatoes.

(g) *Definitions.* The terms "U.S. No. 1," "U.S. Commercial," "U.S. No. 2," "Size B," "slightly skinned," and "moderately skinned" shall have the same meaning as when used in the U.S. Standards for Potatoes (7 CFR 2851.1540–2851.1566), including the tolerances set forth therein. The term "other processing" has the same meaning as the term appearing in the act and includes, but is not restricted to, potatoes for dehydration, chips, shoestrings, starch, and flour. It includes only that preparation of potatoes for market which involves the application of heat or cold to such an extent that the natural form or stability of the commodity undergoes a substantial change. The act of peeling, cooling, slicing, dicing, or applying material to prevent oxidation does not constitute "other processing." Other terms used in this section shall have the same meaning as when used in Marketing Agreement No: 97, as amended, and this part.

(h) *Applicability to imports.* Pursuant to § 8e of the act and § 980.1 *Import regulations* (7 CFR 980.1), Irish potatoes of the red skinned round type, except certified seed potatoes, imported into the United States during the periods November 1, 1980, through June 30, 1981, and September 1, 1981, through October 31, 1981, shall meet the minimum grade, size, quality and maturity requirements specified in paragraphs (a) and (b) of this section.

Dated: September 8, 1980.

D. S. Kuryloski,

Deputy Director, Fruit and Vegetable Division, Agricultural Marketing Service.

[FR Doc. 80-28187 Filed 9-11-80; 8:45 am]

BILLING CODE 3410-02-M

---

7 CFR Part 981

Almonds Grown in California; Formula for Computing "Adjusted Kernel Weight"

AGENCY: Agricultural Marketing Service, USDA.

ACTION: Proposed rule.

SUMMARY: This action proposes to change the formula for computing "adjusted kernel weight" of almonds received by handlers from growers. The adjusted kernel weight computed under the current formula this past year, in some cases, has been larger than the actual weight of almonds received from growers and available for shipment after processing. This action also proposes to make a slight change in the quality control requirements. Both changes were recommended by the Almond Board of California. The Board works with USDA in administering the Federal marketing order for California almonds.

DATES: Comments must be received by September 30, 1980.

ADDRESSES: Send two copies of comments to the Hearing Clerk, U.S. Department of Agriculture, Room 1077, South Building, Washington, D.C. 20250, where they will be available for inspection during business hours (7 CFR 1.27(b)).

FOR FURTHER INFORMATION CONTACT: J. S. Miller, Chief, Specialty Crops Branch, Fruit and Vegetable Division, AMS, USDA, Washington, D.C. 20250 (202) 447–5053. The Draft Impact Statement describing the options considered in developing this proposal and the impact of implementing each option is available on request from J. S. Miller.

SUPPLEMENTARY INFORMATION: This proposal has been reviewed under USDA procedures established in Secretary's Memorandum 1955 to implement Executive Order 12044 and has been classified "not significant".

J. S. Miller has determined that an emergency situation exists which warrants less than a 60-day comment period. Handlers will be receiving and processing 1980 crop almonds in volume soon. Therefore, they must know soon as possible what formula will be used for computing adjusted kernel weight, and what inedible disposition obligation tolerance will be effective for the 1980–81 crop year so they can plan their processing and marketing operations accordingly.

The Subpart—Administrative Rules and Regulations (7 CFR 981.401–981.474), is issued under the marketing agreement and Order No. 981, both as amended (7 CFR Part 981), regulating the handling of almonds grown in California. The marketing agreement and order are hereinafter referred to collectively as the "order". The order is effective under the Agricultural Marketing Agreement Act of 1937, as amended (7 U.S.C. 601–674).

Effective July 1, 1979, § 981.401 was added to that subpart to standardize the computation of adjusted kernel weight. "Adjusted kernel weight" is the weight of almonds handlers receive for their own accounts from growers and available for shipment after processing. However, the current method of computation does not include a factor for weight loss during processing. The absence of this factor has caused the adjusted kernel weight to exceed actual supplies and tended to inflate industry statistics. To correct this situation, the formula set forth in § 981.401 is proposed to be revised to include a one percent processing loss adjustment in computing the adjusted kernel weight for deliveries with less than 95 percent kernels. Since only a negligible weight loss occurs during processing deliveries from growers with 95 percent or more kernels, and processing loss adjustment is not proposed to be included for these deliveries.

With regards to quality control, § 981.42 of the order provides for each handler to cause to be determined through the inspection agency, and at the handler's expense, the weight of inedible kernels in each variety of almonds in excess of two percent of the kernel weight received by the handler, and report this determination to the Board. Section 981.42 also authorizes the Board, with the approval of the Secretary, to change that tolerance for any crop year when crop conditions warrant.

Pursuant to §§ 981.42, 981.442(a) currently requires the weight of inedible kernels in excess of two percent of the kernel weight received by handlers to be reported to the Board. The almond industry expects a fairly high quality 1980 crop and believes that a tolerance of one and one-half percent this year would best accomplish its objectives of improving the quality of almonds entering marketing channels. Therefore, it is proposed that § 981.442(a)(4) be

revised by changing the tolerance for calculating inedible disposition obligations from two percent to one and one-half percent.

The proposed changes in Subpart—Administrative Rules and Regulations (7 CFR 981.401–981.474) are as follows:

1. Section 981.401 is revised to read as follows:

§ 981.401 Adjusted kernel weight.

(a) *Definition.* Except for Peerless bleaching stock, "adjusted kernel weight" shall mean the actual gross weight of any lot of almonds: Less weight of containers; less moisture of kernels in excess of five percent; less shells, if applicable; less processing loss of one percent for deliveries with less than 95 percent kernels; less trash or other foreign material. The adjusted kernel weight shall be determined by sampling certified by the inspection agency. The kernel weight of Peerless bleaching stock shall be 35 percent of the clean bleachable weight.

(b) *Computation.* Except for Peerless bleaching stock, the computation of adjusted kernel weight shall be in the manner shown in the following examples. The examples are based on the analysis of a 1,000 gram sample taken from a lot of almonds weighing 10,000 pounds with less than 95 percent kernels, and a 1,000 gram sample taken from a lot of almonds weighing 10,000 with 95 percent or more kernels. The first computation example is for the lot with less than 95 percent kernels containing the following: edible kernels, 530 grams; inedible kernels, 120 grams; foreign material, 350 grams; and moisture content of kernels, seven percent. Excess moisture is two percent. The second computation example is for the lot with 95 percent or more kernels containing the following: edible kernels, 840 grams; inedible kernels, 120 grams; foreign material, 40 grams; and moisture content of kernels, seven percent. Excess moisture is two percent. The example computations are as follows:

	Computation No. 1—Deliveries with less than 95 pct kernels		Computation No. 2—Deliveries with 95 pct or more kernels	
	Percent of sample	Weight (pounds)	Percent of sample	Weight (pounds)
1. Actual gross weight of delivery		10,000		10,000
2. Percent of edible kernel weight	53.0		84.0	
3. Less weight loss in processing [1]	1.00		0	
4. Less excess moisture of edible kernels (excess moisture×line 2)	1.06		1.68	
5. Net percent shell out (line 2−lines 3 and 4)	50.94		82.32	
6. Net edible kernels (line 5×line 1)		5,094		8,232
7 Percent of inedible kernels (from sample)	12.0		12.0	
8. Less excess moisture of inedible kernels (excess moisture from sample×line 7)	.24		.24	
9. Net percent inedible kernels (line 7−line 8)	11.76		11.76	
10. Total inedible kernels (line 9×line 1)		1,176		1,176
11. Adjusted kernel weight (line 6+line 10)		6,270		9,408

[1] Only applies to deliveries with less than 95 pct kernels.

§ 981.442 [Amended]

2. Section 981.442(a)(4) is amended by changing "two percent" to "one and one-half percent".

Dated: September 8, 1980.

D. S. Kuryloski,

Fruit and Vegetable Division.

[FR Doc. 80-28188 Filed 9-11-80; 8:45 am]

BILLING CODE 3410-02-M

Food Safety and Quality Service

9 CFR Part 313

Humane Handling and Treatment of Livestock; Solicitation of Information

AGENCY: Food and Quality Service, USDA.

ACTION: Notice of solicitation of information.

SUMMARY: The Food Safety and Quality Service is seeking information from all interested members of the public on the need for modification of certain provisions relating to the humane handling of livestock contained in the Federal meat inspection regulations. The Agency has been requested to allow the withholding of water from cattle for a period of time not in excess of 24 hours when such withholding is specified in the sales contract. The Agency has also been requested to allow the withholding of water from animals which are to be slaughtered within 24 hours from the time they arrive at the slaughter establishment. Prior to deciding what, if anything, to propose with respect to these matters, the Agency will consider

FOR FURTHER INFORMATION CONTACT: Dr. Gerald Snyder, Acting Director, Slaughter Inspection Standards and Procedures Division, Technical Services, Meat and Poultry Inspection Program, Food Safety and Quality Service, U.S. Department of Agriculture, Washington, D.C. 20250, (202) 447-3219.

SUPPLEMENTARY INFORMATION:

Comments

Interested persons are invited to submit comments and information concerning this request. Written comments must be sent in duplicate to the Regulations Coordination Division. Comments should bear reference to the date and page number of this issue of the Federal Register. All comments submitted pursuant to this notice will be made available for public inspection in the office of the Regulations Coordination Division during regular hours of business.

Background

On November 30, 1979, the Food Safety and Quality Service published final regulations (44 FR 68809–68817) amending the Federal meat inspection regulations to adopt humane slaughtering and handling practices with respect to livestock in accordance with the Humane Methods of Slaughter Act of 1978 (Pub. L. 95–445). During the development of those regulations, the Department considered comments suggesting that animals have feed and water available as soon as they arrive at the holding pens of the slaughter establishment. As finalized, the regulations require that water be made available in all holding pens and that feed also be provided in all holding pens if the animal is to be retained longer than 24 hours before slaughter. No comments were received suggesting that there be an option of withholding water from cattle for a period of time prior to slaughter.

Since the regulations were finalized, the Food Safety and Quality Service has received a petition from Iowa Beef Processors, Inc., requesting that cattle be allowed to be held at the slaughter establishment without water for up to 24 hours before slaughter when this is specified in a sales contract. The petition states that this is a common and traditional method used in the sale and purchase of cattle for slaughter. Under such a contract, the cattle are consigned all comments in response to this notice.

DATE: Comments and information must be received on or before November 12, 1980.

ADDRESS: Written comments to: Regulations Coordination Division, Attn: Annie Johnson, Food Safety and Quality Service, U.S. Department of Agriculture, to and in the custody of the slaughterer, but do not become his property until

after the contracted period without feed and water and subsequent weighing. After the weighing, the cattle are slaughtered or returned to pens and watered.

This type of contract selling is most often done by producers who sell cattle on the hot carcass weight. It is claimed that this contract gives the producer a reliable check on the slaughterer's yields and prices. It is intended to give the producer reliable information to monitor and improve his feeding practices and to increase his confidence that he is being treated fairly by the slaughterer.

The more common method of purchasing cattle involves weighing the animals at the time of sale and deducting a shrink allowance to arrive at the weight used to compute the purchase price. A producer may believe that the shrink allowance overstates the amount of weight his particular animals will lose and may prefer to sell them on actual weight after a shrink period.

Furthermore, the American Association of Meat Processors has requested that the present requirement for water in pens be changed to allow animals which are to be slaughtered within 24 hours to be withheld from water. It cites the difficulty of keeping pipes thawed in the winter and the maintenance of the drinking troughs and pipes. It claims that animals will not drink in strange surroundings unless they are extremely thirsty and, therefore, are not being mistreated if water is not immediately available.

There is a precedent for withholding feed and water from livestock for periods of up to 28 hours under The 28 Hour Law, 34 Stat. 607. This law was passed in 1906 and applies primarily to livestock transported by railroad. Under the terms of the law, it is prohibited to confine animals in cars, boats, or vessels for a period longer than 28 consecutive hours withoug unloading the same in a humane manner (see 45 U.S.C. 71). Furthermore, this requirement can be extended under certain conditions.

Before deciding whether to propose an amendment to permit the petitioned practices, the Administrator is requesting that interested parties present their views on these matters. These comments will assist the Department in determining whether the regulations promulgated under the Humane Methods of Slaughter Act should be modified.

Done at Washington, D.C., on: September 5, 1980.

Donald L. Houston,

Administrator, Food Safety and Quality Service.

[FR Doc. 80-28060 Filed 9-11-80; 8:45 am]

BILLING CODE 3410-DM-M

DEPARTMENT OF HEALTH AND HUMAN SERVICES

Food and Drug Administration

21 CFR Part 7

[Docket No. 75N-0358]

Enforcement Policy for Certain Compliance Correspondence; Adverse Findings—Regulatory Letters; Withdrawal of Proposal

AGENCY: Food and Drug Administration.

ACTION: Withdrawal of proposal.

SUMMARY: The Food and Drug Administration (FDA) is withdrawing the proposed rule that would have established regulations describing the policies and procedures which govern correspondence designed to achieve compliance with the laws enforced by the agency. The principles outlined in the proposal have been incorporated into an internal agency manual which is available to the public.

ADDRESS: The comments received in response to the proposal may be seen at the office of the Hearing Clerk (HFA-305), Food and Drug Administration, Rm. 4-62, 5600 Fishers Lane, Rockville, MD 20857.

FOR FURTHER INFORMATION CONTACT: Gary Dykstra, Regulatory Operations Section (HFC-22), Food and Drug Administration, 5600 Fishers Lane, Rockville, MD 20857, 301-443-3470.

SUPPLEMENTARY INFORMATION: In the Federal Register of June 23, 1978 (43 FR 27498), FDA issued a proposed rule to amend Part 7 (21 CFR Part 7) in § 7.3 and add new Subpart B consisting of §§ 7.20-7.34. Twenty-eight comments were received during the 60-day period provided by the June 23, 1978 proposal. Most of the comments supported the general approach of the proposal, but opposed specific provisions in the form of a regulation.

The agency has decided not to publish a final regulation at this time. Instead, the principles outlined in the proposal as well as revisions prompted by comments have been incorporated into a revision of the agency's internal *Regulatory Procedures Manual* (RPM) (Chapters 8-10). The agency may repropose the regulation if experience with the revised portion of the RPM warrants.

The purpose of the RPM is to promote, insofar as practicable, consistent and uniform enforcement procedures within the agency. The entire manual or any chapter is available to the public under the provisions of the Freedom of Information Act. Inquiries regarding the manual or requests for copies of it may be addressed to: Food and Drug Administration, Freedom of Information (HFI-35), 5600 Fishers Lane, Rockville, MD 20857.

Therefore, under the Federal Food, Drug, and Cosmetic Act (sec. 701(a), Pub. L. 717, 52 Stat. 1055 (21 U.S.C. 371(a)); sec. 360C(d), Pub. L. 410, 82 Stat. 1184-1185 (42 U.S.C. 263k(d))) and under authority delegated to the Commissioner of Food and Drugs (21 CFR 5.1), the proposal published in the Federal Register of June 23, 1978 to amend 21 CFR Part 7 to describe practices and procedures for two forms of compliance correspondence for judicially and administratively enforced sanctions is hereby withdrawn, and the rulemaking proceedings begun by the proposal are terminated.

Dated: September 5, 1980.

Joseph P. Hile,

Associate Commissioner for Regulatory Affairs.

[FR Doc. 80-27869 Filed 9-11-80; 8:45 am]

BILLING CODE 4110-03-M

21 CFR Part 14

[Docket No. 80N-0345]

Public Hearing Before a Public Advisory Committee; Advisory Committee Annual Reports

AGENCY: Food and Drug Administration.

ACTION: Proposed rule.

SUMMARY: The Food and Drug Administration (FDA) proposes to delete from its regulations the provision that requires annual reports concerning advisory committees which meet entirely in open session. This provision is no longer necessary.

DATE: Written comments by November 12, 1980.

FOR FURTHER INFORMATION CONTACT: Richard L. Schmidt, Committee Management Office (HFA-306), Food and Drug Administration, 5600 Fishers Lane, Rockville, MD 20857, 301-443-2765.

SUPPLEMENTARY INFORMATION: Section 10(d) of the Federal Advisory Committee Act (Pub. L. 92-463) requires that any advisory committee that holds a closed meeting issue a report at least annually setting forth a summary of its activities as would be informative to the public. FDA's regulations implement this requirement (21 CFR 14.60(d)) and further extend this obligation to all agency advisory committes whether or not they have held any closed sessions (21 CFR Part 14.60(e)). The purpose of the report is to inform the public of the advisory committees' membership,

functions, recommendations, and other actions. In light of the public accessibility to this information (21 CFR 14.75), particularly for committees which meet entirely in open session, FDA believes that § 14.60(e) is no longer necessary, and proposes to delete this provision from its advisory committee regulations. Thus, with this change FDA's regulations would conform to Federal Advisory Committee Act requirements or reports only for committees that have held closed sessions.

In the early years after enactment of Pub. L. 92-463 and promulgation of FDA's advisory committee regulations, most FDA advisory committees met in closed session, and the annual reports served a purpose in informing the public of the committees' activities. Now, however, most FDA advisory committee meetings are entirely open, and each meeting includes an opportunity for comment and participation by interested persons on issues that are before the committee. A verbatim transcript of all open portions of meetings and many closed portions (after deletion of confidential material), as well as committee charaters and the minutes of each meeting, are available to the public. In addition, when FDA obtains an advisory committee's recommendation before issuing a proposed rule, e.g., to classify a medical device or to establish a monograph for an over-the-counter drug, FDA generally publishes for comment details of the committee's recommendation.

In view of these factors and the disirability of reducing paperwork wherever possible, FDA believes that annual reports for those committees which have met entirely in open session should be eliminated. Reports by those committees which have held closed meetings during the reporting period will be filed in accordance with the Federal Advisory Committee Act and 21 CFR 14.60(d).

The agency has determined pursuant to 21 CFR 25.24(b)(12) (proposed December 11, 1979, 44 FR 71742) that this proposed action is of a type that does not individually or cumulatively have a significant impact on the human environment. Therefore, neither an environmental assessment nor an environmental impact statement is required.

§ 14.60 [Amended]

Therefore, under the Federal Food, Drug, and Cosmetic Act (sec. 701(a), 52 Stat. 1055 (21 U.S.C. 371(a))) and under authority delegated to the Commissioner of Food and Drugs (21 CFR 5.1), it is proposed that Part 14 be amended in § 14.60 *Minutes and reports of advisory committee meetings* by deleting paragraph (e).

Interested persons may, on or before November 12, 1980; submit to the Hearing Clerk (HFA-305), Food and Drug Administration, Rm. 4-62, 5600 Fishers Lane, Rockville, MD 20857, written comments regarding this proposal. Four copies of any comments are to be submitted, except that individuals may submit one copy. Comments are to be identified with the Hearing Clerk docket number found in brackets in the heading of this document. Received comments may be seen in the office above between 9 a.m. and 4 p.m., Monday through Friday.

Note.—In accordance with Executive Order 12044, as amended by Executive Order 12221, the economic effects of this proposal have been carefully analyzed, and it has been determined that the proposed rulemaking does not involve major economic consequences as defined by that order. A copy of the regulatory analysis assessment supporting this determination is on file with the Hearing Clerk, Food and Drug Administration.

Dated: September 3, 1980.

Joseph P. Hile,

Associate Commissioner for Regulatory Affairs.

[FR Doc. 80-27871 Filed 9-11-80; 8:45 am]

BILLING CODE 4110-03-M

DEPARTMENT OF THE TREASURY

Internal Revenue Service

26 CFR Part 1

[LR-71-79]

Election by Nonresident Alien Individual To Be Treated as Resident and Income Tax Treaties

AGENCY: Internal Revenue Service, Treasury.

ACTION: Notice of proposed rulemaking.

SUMMARY: This document contains proposed regulations relating to the relationship of the election by a nonresident alien individual to be treated as a U.S. resident and United States income tax treaties. The changes are necessary because the paragraph dealing with the relationship of the election and tax treaties was reserved when the existing regulations were adopted. The regulations would provide guidance to individuals considering taking advantage of the election. The election provision was added to the tax law by the Tax Reform Act of 1976.

DATES: Written comments and requests for a public hearing must be delivered or mailed by November 11, 1980. The amendments are proposed to be effective for taxable years ending on or after December 31, 1975.

ADDRESS: Send comments and requests for a public hearing to: Commissioner of Internal Revenue, Attention: CC:LR:T (LR-71-79), Washington, D.C. 20224.

FOR FURTHER INFORMATION CONTACT: Kenneth Klein of the Legislation and Regulations Division, Office of the Chief Counsel, Internal Revenue Service, 1111 Constitution Avenue, N.W., Washington, D.C. 20224, Attention: CC:LR:T; 202-566-3289, not a toll-free call.

SUPPLEMENTARY INFORMATION:

Background

On January 31, 1980, the Federal Register published amendments to the Income Tax Regulations (26 CFR Part 1) under sections 879, 6013, and other sections of the Internal Revenue Code of 1954. The amendments concerned the election under sections 6013 (g) and (h) by a nonresident alien individual to be treated as a U.S. resident and the treatment of community income where the election is not made. The amendments reserved § 1.6013-6(a)(2)(v) of the regulations. This docuemnt contains a proposed amendment to the Income Tax Regulations (26 CFR Part 1) under section 6013 of the Internal Revenue Code of 1954. The amendment is proposed to be issued under the authority contained in section 7805 of the Internal Revenue Code of 1954 (68A Stat. 917; 26 U.S.C. 7805).

Discussion

Section 1012(a) of the Tax Reform Act of 1976 amended section 6013 of the Internal Revenue Code of 1954 by adding subsections (g) and (h), which provide that a nonresident alien individual may, under certain circumstances, elect to be treated as a U.S. resident. The principal effect of this election is to permit the nonresident alien individual to file a joint return with a spouse who is a resident or citizen of the United States.

An effect of being treated as a U.S. resident is that one is subject to income tax on worldwide income. The committee reports under the Tax Reform Act of 1976 state that an election under section 6013 (g) or (h) is an election to be taxed on worldwide income. H. Rep. No. 94-658, 94th Cong., 1st Sess. 204 (1975); S. Rep. No. 94-938, 94 Cong., 2d Sess. 213 (1976). The United States has entered into a number of income tax treaties with other countries. Under these treaties, the right of the treaty countries (including the United States) to tax income will depend, in many cases,

upon the country of which an individual is resident. as a nonresident alien individual making the election also will be a resident of another country, it is necessary to make clear the individual's residence for purposes of United States income tax treaties.

The proposed regulations provide that an individual who makes the election may not, for United States income tax purposes, claim under any U.S. income tax treaty not to be a resident of the United States. Thus, the individual who make the election will be subject to U.S. income tax on worldwide income even though the individual, as a resident of another country, may have been exempt under a U.S. income tax treaty from U.S. tax on certain income before making the election. The proposed regulations provide an example of the operation of the new rule. An example also is included showing the ability of an individual who makes the election to take advantage of the benefits granted to U.S. residents by a U.S. income tax treaty with a country other than the country of which the individual is resident.

Comments and Requests for a Public Hearing

Before adopting these proposed regulations, consideration will be given to any written comments that are submitted (preferably six copies) to the Commissioner of Internal Revenue. All comments will be available for public inspection and copying. A public hearing will be held upon written request to the Commissioner by any person who has submitted written comments. If a public hearing is held, notice of the time and place will be published in the Federal Register.

Drafting Information

The principal author of these proposed regulations is Kenneth Klein of the Legislation & Regulations Division, Office of the Chief Counsel, Internal Revenue Service. However, personnel from other offices of the Internal Revenue Service and the Treasury Department participated in developing these regulations both on matters of substance and style.

Proposed Amendments to the Regulations

The proposed amendments to 26 CFR Part 1 are as follows:

Paragraph. Subdivision (v) of paragraph (a)(2) of § 1.6013-6 is amended to read as follows:

§ 1.6013-6 Election to treat nonresident alien individual as resident of the United States.

(a) *Election for special treatment*—

* * *

(2) *Particular rules.* * * *

(v)(A) An individual who makes an election under this section may not, for United States income tax purposes, claim under any United States income tax treaty not to be a U.S. resident.

(B) The relationship of U.S. income tax treaties and the election under this section is illustrated by the following examples.

Example (1). H, a U.S. citizen, is married to W, a nonresident alien of the United States and a domiciliary of country X. H and W maintain their only permanent home in country X. W receives both U.S. source and country X source interest during the taxable year. The interest is not effectively connected with a permanent establishment or a fixed base in any country. H and W make the section 6013(g) election. Under article 11(1) of the United States—country X Income Tax Convention, interest derived and beneficially owned by a resident of one contracting state is exempt from tax in the other contracting state. Article 4(1) of the treaty provides that an individual is a resident of a contracting state if subject to tax in that country by reason of the individual's domicile, residence, or citizenship. Under article 4(1) of the treaty, W is a resident of country X by virtue of her domicile in country X and also of the United States by virtue of the section 6013(g) election. Article 4(2) of the treaty provides that if an individual is a resident of both the United States and country X by reason of article 4(1), the individual shall be deemed to be a resident of the contracting state in which he or she has a permanent home available. Because W's sole permanent home is in country X, under article 4(2) of the treaty W is treated as a resident of country X for purposes of the treaty. Because W has elected under section 6013(g) to be treated as a U.S. resident (and thus to be taxed on worldwide income), W may not, for U.S. income tax purposes, claim under the treaty not to be a U.S. resident. W, therefore, is subject to U.S. income tax on the interest. For purposes of country X income tax, W is considered a resident of country X under the treaty. Country X may, therefore, also tax the interest. Pursuant to sections 901 and 904, W may not be able to claim a credit against her U.S. income tax liability for the income tax paid to country X with respect to the U.S. source interest.

Example (2). The facts are the same as in *Example (1),* except that W is not domiciled, and does not have a permanent home, in country X. Under the law of country X, individuals not domiciled in country X are liable to country X income tax only on interest and certain other income received from sources within country X. Under article 4(1) of the treaty, W is not a resident of country X. Because W has elected under section 6013(g) to be treated as a U.S. resident, under article 4(1) W is a U.S. resident for purposes of the treaty. Since article 11(1) provides that interest derived by a U.S. resident shall be taxed only by the United States, W is entitled to exemption from the country X income tax which would otherwise have been imposed on the interest in the absence of the election.

* * * * *

Jerome Kurtz,

Commissioner of Internal Revenue.

[FR Doc. 80-28246 Filed 9-11-80; 8:45 am]

BILLING CODE 4830-01-M

DEPARTMENT OF JUSTICE

Parole Commission

28 CFR Part 2

Improving Government Regulations; Semiannual Agenda of Regulations

AGENCY: United States Parole Commission.

ACTION: Publication of semi-annual agenda of regulations under development or review pursuant to Executive Order No. 12044.

SUMMARY: The United States Parole Commission anticipates having the following policy matter under consideration for rule-making during the period from July 31, 1980 to July 30, 1981. Supplements to this agenda may be published when necessary.

FOR FURTHER INFORMATION CONTACT: Toby Slawsky, Office of the General Counsel, U.S. Parole Commission, 320 First Street, NW., Washington, D.C. 20537, phone (202) 724-7567.

SUPPLEMENTARY INFORMATION:

Agenda

Title of Regulation: Rescission guidelines.

Discussion: The Parole Commission is intending to modify its interim rule on rescission of parole. The modification differs from the prior interim rule by distinguishing between new criminal behavior committed by a prisoner subsequent to the commencement of his sentence and prior to his release on parole on the basis of whether the new criminal behavior occurred in a prison facility or in the community. New criminal behavior in the community will be somewhat more severely sanctioned than new criminal behavior in a prison facility because it violates the trust placed in a prisoner given community release.

To provide the Commission with more precision and uniformity in sanctioning new criminal conduct, the Commission's modification will require that the sanction for any new criminal behavior be determined under the appropriate guidelines, then added to the time

required to be served by the original presumptive or effective parole date. Sanctions for administrative rule infractions and escape will remain substantially the same as in the prior interim rule.

Legal Basis: 18 U.S.C. 4203(a)(1).

Knowledgeable Official: Barbara Meierhoefer, Research Unit (202) 724-3095.

Title of Regulation: Early Termination of Parole Supervision.

Discussion: The Commission plans to amend its rule on early termination of parole by adding a provision that would require that for termination of parole supervision prior to the expiration of a parolee's maximum sentence a parolee must normally be on supervision for a specified number of years (according to the parolee's salient factor score) before a reeliable prediction can be made as to his chances for success without further supervision, and that during that period he must be incident-free and obey all conditions of parole release.

Legal Basis: 18 U.S.C. 4203(a)(1).

Knowledgeable Official: Michael A. Stover, Office of the General Counsel, (202) 724-7567.

Regulatory Analysis: The Commission has determined that the above proposed rule-making actions would not involve major economic consequences as defined by Section 3 of Executive Order 12044, and therefore will not require regulatory analysis.

Dated: August 5, 1980.

Cecil C. McCall,

Chairman, U.S. Parole Commission.

[FR Doc. 80-28104 Filed 9-11-80; 8:45 am]

BILLING CODE 4410-01-M

POSTAL SERVICE

39 CFR Part 111

Identification of Special Rate Bulk Third Class Mailers

AGENCY: Postal Service.

ACTION: Proposed rule.

SUMMARY: This proposed rule would, among other things, require that all matter mailed at the special bulk third-class rates of postage bear the full name and return address of the special rate user on both the outside of the mailing piece and on the enclosed material. The name used would have to be the name that appears on the special rate authorization issued by the Postal Service to the mailer. There is an exception to this rule for well recognized abbreviations, but the written permission of the General Manager, Domestic Mail Classification Division, would be required.

Present regulations permit the name and return address to be either on the mailing piece or on the enclosed material. The absence of this information in one place or the other has caused problems for the Postal Service. For example, it has been difficult at times for the Postal Service to verify the identity of the mailer and thus to determine whether correct postage has been paid. Members of the public have also complained of their inability to determine the identity of the organization mailing material to them. These proposed changes are intended to solve these and other similar problems.

DATE: Comments must be received on or before October 14, 1980.

ADDRESS: Written comments should be mailed or delivered to the Director, Office of Mail Classification, Rates & Classification Department, Room 1640, 475 L'Enfant Plaza West, S.W., Washington, D.C. 20260. Copies of all written comments will be available for inspection and photocopying between 9:00 A.M. and 4:00 P.M., Monday through Friday, in Room 1640, at the above address.

FOR FURTHER INFORMATION CONTACT: Mr. James F. Harding, (202) 245-4512.

SUPPLEMENTARY INFORMATION: Present postal regulations (Domestic Mail Manual § 623.6) require that the name and return address of the organization qualified to make a special rate bulk third-class mailing appear either in a prominent place on the matter being mailed or on the outside of the mailing piece. The absence of this identification on the outside of the mailing piece causes problems for the Postal Service, because postal officials cannot easily verify who the mailer is and that the mailer is authorized to mail at the reduced special rates of postage. The Postal Service has also received many complaints from the public concerning mail sent at the special rates because the identity of the mailer sometimes does not appear on the mailing piece, or because it is also not prominently displayed on the enclosed materials. For these reasons, the Postal Service proposes to require that both the name and the return address of the authorized organization must appear *both* on the outside of all special rate mail and in a prominent location on the material mailed. In this way, both the Postal Service and the addressee will be able to easily identify the organization which sent the mailing piece.

The Postal Service has experienced problems with authorized organizations using a variety of names to identify themselves on their special rate mailings. For purposes of administrative efficiency and to avoid confusion, the Postal Service proposes to require that only one name can be used to identify an authorized organization on all its mailings. That name will be the name the organization chose to use when it applied to the Postal Service for a special rate authorization. If the organization wishes to use a different name, it will need to apply for an authorization under the new name. An exception to this requirement is currently provided for well recognized alternative designations or abbreviations. Because the Postal Service has experienced problems with organizations using abbreviations which are not generally "well recognized," the proposed rule would restrict such usage to those designations or abbreviations which had been approved in writing by the General Manager, Domestic Mail Classification Division.

The Postal Service has also experienced problems with authorized organizations using the name of a subpart of the organization for identification purposes in lieu of the name of the organization, or using the name of a subpart in a more prominent manner than the name of the organization. This practice causes great confusion for the Postal Service, because the subpart is not known as an authorized organization, and postal officials may not recognize it as part of an authorized organization. To correct this problem, the proposed rule would permit the use of the name of a subpart of the authorized organization in the required identifications, but would require that the name of the subpart could only be used in conjunction with, and not in place of, the name of the authorized organization.

If the proposed rule is adopted, the Postal Service will give mailers a reasonable time to use existing stocks of envelopes and mailing materials which meet the requirements of the present identification regulations and which were prepared prior to the publication of this proposed rule.

Although exempt from the requirements of the Administrative Procedure Act, (5 U.S.C. 553(b), (3)) regarding proposed rulemaking by 39 U.S.C. 410(a), the Postal Service invites public comment on the following proposed revision of the Domestic Mail Manual, which is incorporated by reference in the Federal Register. See 39 CFR 111.1.

PART 623—SPECIAL BULK RATES

In part 623 of the Domestic Mail Manual, amend section 623.6 to read as follows:

623.6 Identification. The full name and return address of the organization authorized under 642 to mail at the special bulk rates must appear both on the outside of the mailing piece and in a prominent location on the material being mailed at the special rates. The name used must be the name that appears on the special rate authorization issued by the Postal Service to the mailing organization. The name of a subpart of the authorized organization may appear in conjunction with, but not in place of, the name of the authorized organization. Pseudonyms or bogus names of persons or organizations may not be used. Note: A well recognized alternative designation or abbreviation such as "The March of Dimes" or the "AFL-CIO" may be used in place of the full name of the organization with the written permission of the General Manager, Domestic Mail Classification Division.

An appropriate amendment to 39 CFR 111.3 to reflect these changes will be published if the proposal is adopted.

(39 U.S.C. 401(2))

W. Allen Sanders,

Associate General Counsel, Office of General Law and Administration.

[FR Doc. 80-28222 Filed 9-11-80; 8:45 am]

BILLING CODE 7710-12-M

---

39 CFR Part 310

Alternate Methods of Paying Postage on Privately Shipped Letters

AGENCY: Postal Service.

ACTION: Proposed rule.

SUMMARY: The Postal Service proposes to amend its regulations which permit letters to be carried privately when the sender affixes postage and takes other steps, prescribed by law, such as canceling stamps and sealing envelopes.

The proposed regulations would not prescribe specific alternative procedures to those which are now required, but would allow for the development of alternatives tailored to the needs of individual shippers.

DATE: Comments must be received on or before October 14, 1980.

ADDRESS: Written comments should be addressed to: Jerry Belenker, Law Department, U.S. Postal Service, 475 L'Enfant Plaza West, S.W., Washington, D.C. 20260. Copies of all written comments received will be available for public inspection and photocopying between 9 A.M. and 4 P.M., outside Room 9107 at the above address.

FOR FURTHER INFORMATION CONTACT: Jerry Belenker, (202) 245-4616.

SUPPLEMENTARY INFORMATION: The Private Express Statutes, 18 U.S.C. 1693-1699, 1724; 39 U.S.C. 601-606, place limitations on the private carriage of letters over post routes in recognition of the Postal Service's need for a sound revenue base. The Statutes, as interpreted in postal regulations, specifically permit, however, the private carriage of letters if applicable postage is paid and the following procedural requirements are satisfied:

(1) The letter is enclosed in an envelope or other suitable cover; (2) the postage is paid by stamps, or postage meter stamps, on the cover or by other methods approved by the Postal Service; (3) a name and an address appear on the cover; (4) the cover must be sealed; (5) stamps are canceled in ink by the sender; and (6) the date of the letter, or of its transmission or receipt by the carrier, is endorsed by the sender or carrier. 39 U.S.C. 601(a); 39 CFR 310.2(b)(1)-(6).

Despite the provision in existing 39 CFR 310.2(b)(2) that postage may be paid by other methods approved by the Postal Service, we have generally required compliance with the existing procedural requirements because they facilitate objective verification that the private carriage has not caused the Postal Service to lose revenue to which it is legally entitled. We now believe that it may be possible to develop other methods which would be more convenient for some shippers while still ensuring payment of postage on privately carried letters. The method applicable to a given shipper would be formalized in a written agreement between the shipper or carrier and the Postal Service and would necessarily depend upon the volume of letters involved, frequency and regularity of shipment, accuracy with which postage may be estimated or recorded, and other factors. Any agreements finally reached would have to specify time frames for their duration (subject to renewal) and provisions for periodic review, audit, and inspection.

In consideration of the foregoing, it is proposed to revise paragraph (b) of 39 CFR 310.2 to read as follows:

PART 310—ENFORCEMENT OF THE PRIVATE EXPRESS STATUTES

* * * * *

§ 310.2 Unlawful carriage of letters.

* * * * *

(b) Activity described in paragraph (a) of this section is lawful with respect to a letter if—

(1)(i) The letter is enclosed in an envelope or other suitable cover;

(ii) The amount of postage which would have been charged on the letter if it had been sent through the Postal Service is paid by stamps, or postage meter stamps, on the cover or by other methods approved by the Postal Service;

(iii) The name and address of the person for whom the letter is intended appear on the cover;

(iv) The cover is so sealed that the letter cannot be taken from it without defacing the cover;

(v) Any stamps on the cover are canceled in ink by the sender; and

(vi) The date of the letter, or of its transmission or receipt by the carrier, is endorsed on the cover in ink by the sender or carrier, as appropriate; or

(2)(i) The activity is in accordance with the terms of a written agreement between the shipper or the carrier of the letter and the Postal Service. Such an agreement may include some or all of the provisions of paragraph (b)(1) of this section, or it may change them, but it must—

(A) Adequately ensure payment of an amount equal to the postage to which the Postal Service would have been entitled had the letters been carried in the mail;

(B) Remain in efect for a specified period (subject to renewals); and

(C) Provide for periodic review, audit and inspection.

(ii) Possible alternate arrangements may include but are not limited to—

(A) Payment of a fixed sum at specified intervals based on the shipper's projected shipment of letters for a given period, as verified by the Postal Service; or

(B) Utilization of a computer record to determine the volume of letters shipped during an interval and the applicable postage to be remitted to the Postal Service.

(39 U.S.C. 401, 404, 601-606; 18 U.S.C. 1693-1699, 1724)

W. Allen Sanders,

Associate General Counsel, General Law and Administration.

[FR Doc. 80-28221 Filed 9-11-80; 8:45 am]

BILLING CODE 7710-12-M

FEDERAL EMERGENCY MANAGEMENT AGENCY

44 CFR Part 67

[Docket No. FEMA-5749]

National Flood Insurance Program; Revision of Proposed Flood Elevation Determinations

AGENCY: Federal Insurance Administration, FEMA.

ACTION: Proposed rule.

SUMMARY: Technical information or comments are solicited on the proposed base (100-year) flood elevations listed below for selected locations in the Village of Burr Ridge, Du Page County, Illinois.

Due to recent engineering analysis, this proposed rule revises the proposed determinations of base (100-year) flood elevations published in the *Suburban Life* on November 30, 1979 and December 7, 1979, and at 44 FR 70785 on December 10, 1979, and hence supersedes those previously published rules.

DATES: The period for comment will be ninety (90) days following the second publication of this notice in a newspaper of local circulation in the above named community.

ADDRESSES: See table below.

FOR FURTHER INFORMATION CONTACT: Mr. Robert G. Chappell, National Flood Insurance Program, (202) 426-1460 or Toll Free Line (800) 424-8872 (In Alaska and Hawaii call Toll Free Line (800) 424-9080), Federal Emergency Management Agency, Washington, D.C. 20472.

SUPPLEMENTARY INFORMATION: Proposed base (100-year) flood elevations are listed below for selected locations in the Village of Burr Ridge, Du Page County, Illinois, in accordance with section 110 of the Flood Disaster Protection Act of 1973 (Pub. L. 93-234), 87 Stat. 980, which added section 1363 to the National Flood Insurance Act of 1968 (Title XIII of the Housing and Urban Development Act of 1968 (Pub. L. 90-448), 42 U.S.C. 4001-4128, and 44 CFR 67.4(a)).

These base (100-year) flood elevations are the basis for the flood plain management measures that the community is required to either adopt or show evidence of being already in effect in order to qualify or remain qualified for participation in the National Flood Insurance Program (NFIP).

These modified elevations will also be used to calculate the appropriate flood insurance premium rates for new buildings and their contents and for the second layer of insurance or existing buildings and their contents.

The proposed base (100-year) flood elevations for selected locations are:

Proposed Base (100-Year) Flood Elevations

State	City/town/county	Source of flooding	Location	#Depth in feet above ground. *Elevation in feet (NGVD)
Illinois	(V) Burr Ridge, Du Page County	79th Street Ditch	75 feet upstream of corporate limits	*674
			Just downstream of private drive	*680
			Just upstream of private drive	*689
			Just upstream of County Line Road	*690
			Just downstream of 79th Street	*692
			Just upstream of Hamilton Avenue	*694
			Approximately 1,000 feet upstream of Hamilton Avenue	*695
		63rd Street Ditch	Eastern corporate limits	*641
			Just downstream of pond outlet	*647
			Just upstream of pond inlet	*653
			Just downstream from County Line Road	*663
			Upstream from County Line Road	*670
			Downstream side of Elm Avenue	*672
			150 feet downstream of Garfield Avenue	*681
			Approximately 150 feet upstream of Garfield Avenue	*685
			Approximately 150 feet upstream of Grant Street	*691
			Approximately 700 feet upstream from Grant Street	*694
			Approximately 200 feet downstream of Madison Street	*702
		Plainfield Road Ditch	Downstream side of Interstate 294	*638
			Approximately 1,100 feet downstream of Hill Crest Circle	*644
			Just downstream of Hillcrest Circle	*652
			200 feet upstream of Hillcrest Circle	*655
			Downstream of Shady Lane Road	*657
			75 feet upstream of Shady Lane Road	*661
			Just downstream of County Line Road	*675
			Upstream of County Line Road	*680
			Approximately 300 feet upstream from County Line Road	*693
			Just downstream of International Harvester entrance	*699
			Upstream of International Harvester entrance	*703
			3,950 feet upstream from International Harvester entrance	*706

Maps available for inspection at the Village Hall, 220 West 75th Street, Burr Ridge, Illinois.

Send comments to Honorable Leonard Ruzak, Village President, Village of Burr Ridge, Village Hall, 220 West 75th Street, Burr Ridge, Illinois 60521.

(National Flood Insurance Act of 1968 (Title XIII of Housing and Urban Development Act of 1968), effective January 28, 1969 (33 FR 17804, November 28, 1968), as amended; 42 U.S.C. 4001-4128; Executive Order 12127, 44 FR 19367; and delegation of authority to Federal Insurance Administrator)

Issued: August 26, 1980.

Gloria M. Jimenez,

Federal Insurance Administrator.

[FR Doc. 80-28148 Filed 9-11-80; 8:45 am]

BILLING CODE 6718-03-M

INTERSTATE COMMERCE COMMISSION

49 CFR Part 1048

[Ex Parte No. MC 37 (Sub-32)]

Chicago, Ill., Commercial Zone

AGENCY: Interstate Commerce Commission.

ACTION: Notice of extension of time to notice of proposed rulemaking.

SUMMARY: The Commission opened this proceeding to consider whether to amend its existing regulations set forth in 49 CFR Part 1048, et seq., to expand the Chicago, IL, commercial zone to include all or a portion of the County of Lake, IL. The proposed special determination of the zone would expand the zone within which interstate motor carrier operations would be exempt from Federal economic regulation. The purpose of this document is to give notice that the time for filing comments in this proceeding is extended to September 25, 1980.

DATE: Comments should be filed by September 25, 1980.

ADDRESS: Send an original and 15 copies, if possible, of any comments to: Ex Parte No. MC 37 (Sub-32), Room 5416, Office of Proceedings, Interstate Commerce Commission, Washington, D.C. 20423.

FOR FURTHER INFORMATION CONTACT: Thomas J. Barry (202) 275-7982 or Donald J. Shaw, Jr. (202) 275-7292.

SUPPLEMENTAL INFORMATION: The Waukegan/Lake County, IL, Chamber of Commerce has filed a written request that the time for filing comments in this proceeding (notice of proposed rulemaking published at 45 FR 49627, July 25, 1980) be extended for 60 days. The Chamber of Commerce contends this extension is needed to prepare all the necessary information to support the request for the extension of the Chicago commercial zone.

A 30-day extension for the filing of comments is warranted to provide sufficient time for the Chamber of Commerce to gather the information it needs to file meaningful comments. A 60-day extension would, on the other hand, delay the proceeding for an unreasonable period of time.

Accordingly, the time for filing comments in this proceeding is extended from August 15, 1980 to September 15, 1980.

Decided: August 28, 1980.

By the Commission, Darius W. Gaskins, Jr., Chairman.

Agatha L. Mergenovich,

Secretary.

[FR Doc. 80-28204 Filed 9-11-80; 8:45 am]

BILLING CODE 7035-01-M

DEPARTMENT OF THE INTERIOR

Fish and Wildlife Service

50 CFR Parts 23 and 810

Finding of Nondetriment for Export of Bobcats (Lynx rufus) in Response to Requests by Three States

AGENCY: Fish and Wildlife Service, Interior.

ACTION: Notice of finding.

SUMMARY: The Convention on International Trade in Endangered Species of Wild Fauna and Flora (CITES) is a 59-nation treaty regulating import and export of species included in three appendices. Export of species included in Appendix II requires, prior to grant of an export permit, a finding by a Scientific Authority of the country of origin that such export will not be detrimental to the survival of the species. The bobcat (*Lynx rufus*) is included in Appendix II with most other members of the cat family (Felidae). Since 1977, the Endangered Species Scientific Authority (ESSA), as Scientific Authority for the United States, annually reviewed the status and management of the bobcat and certain other species on a State-by-State basis in order to make determinations on whether export would not be detrimental. On September 26, 1979, the ESSA published findings favorable to export of bobcat pelts taken in the 1979-80 season in 35 states and the Navajo Nation. On December 12, 1979, as a result of a suit filed by Defenders of Wildlife, Inc., the U.S. District Court for the District of Columbia issued a Memorandum Opinion and Order which reversed the ESSA's previous findings for five of those States and parts of two others, thus enjoining export of bobcat pelts legally taken in those States or areas. Since the time judgment was entered, the Scientific Authority function was reassigned to the Fish and Wildlife Service by the 1979 Amendments to the Endangered Species Act of 1973. Three of the States affected by the ruling, Florida, Massachusetts, and New Mexico, have submitted additional biological and management information to the Service. They have asked the Service to make a new non-detriment finding based on this additional material. The Service, as Scientific Authority for the Convention, gives notice of its finding that this material provides extensive new evidence that export of bobcats taken in those States in 1979-80 will not be detrimental to the survival of the species. Final approval of such exports would depend on a ruling by the Court.

DATE: The Service emphasizes that the Court's injunction is still in effect. Final approval of exports from these three States depends on a ruling by the Court modifying or vacating its injunction.

ADDRESS: Please address correspondence to the Office of the Scientific Authority, U.S. Fish and Wildlife Service, Washington, D.C. 20240. Materials concerning this finding and the Court's decision will be available for public inspection from 7:45 am to 4:15 pm, Monday through Friday, in room 536, 1717 H Street, N.W., Washington, D.C.

FOR FURTHER INFORMATION CONTACT: Dr. Richard L. Jachowski, Office of the Scientific Authority, U.S. Fish and Wildlife Service, Washington, D.C. 20240, telephone (202) 653-5998.

SUPPLEMENTARY INFORMATION: The ESSA's final findings for the 1979-80 harvest season of bobcat, lynx, and river otter were published on September 26, 1979 (44 FR 55539). In those findings, the ESSA found in favor of export of bobcat pelts taken in the 1979-80 season in 35 States and the Navajo Nation. Complete references to preliminary findings, standards, and summaries of information previously received for that season and previous seasons may be found in that notice and in the preliminary notice of those findings (44 FR 40641, July 12, 1979).

In the suit, *Defenders of Wildlife, Inc. v. Endangered Species Scientific Authority, et al.*, No. 79-3060 (D.D.C. December 12, 1979), Defenders of Wildlife asked the Court to prohibit export from all jurisdictions approved by the ESSA and to declare inadequate the standards used by the ESSA in reaching those determinations. The Court found the information upon which the Scientific Authority made its deteminations sufficient in all but seven States. The Court enjoined export of bobcats taken in the 1979-80 season in Florida, Massacuhsetts, New Mexico, North Dakota, Wisconsin, Oregon east of the Cascades, and the high plains ecological area of Texas. Implicit in the Court's opinion is a determination that the standards applied by the Scientific Authority in making its determinations were adequate. Thus the Court prohibited export from the seven States on the basis that it considered the available information inadequate to

support the ESSA findings for those States.

The Court's decision prohibits only international export of pelts taken in the affected States and does not prohibit hunting, trapping or commerce in the species within the United States, including the affected States. Each of the three States discussed in this notice provided the Service with considerable additional documentation relating to the problems addressed by the Court.

On May 21, 1980 (45 FR 34025), the Service published a notice of its proposed finding that export of bobcats legally taken in Florida, Massachusetts and New Mexico in the 1979–80 season would not be detrimental to the survival of the species, based on information summarized in earlier Federal Register notices cited above and on additional information. In each case, this finding has as a condition that pelts are clearly identified as to State of origin and season of taking, including tagging according to standards and conditions previously established by the Service. The present notice finalizes these new findings.

Corrections and Additions

The additional information submitted by the three States in support of the present finding has been summarized in the proposal (45 FR 34025, May 21, 1980) and will not be repeated here. Minor corrections and additions to that information are as follows:

In the discussion of Florida's scent post line survey results, a typographical error left out parts of two sentences. The second sentence on page 34026 should read: "These lines are distributed throughout the State, and were designed specifically to provide indices of bobcat abundance. These stations produced a 53 percent higher visitation rate in 1979 than was found in 1978 for the entire State (confirmed statistically), in spite of the higher prices and apparently higher harvest pressure." In the discussion of Massachusetts' age structure analyses starting in the last paragraph on page 34026, an error was made in that the sample of "22 for 1978–79" actually represented a combined sample of which seven animals were from the 1977–78 season and 15 animals were from the 1978–79 season. In addition, the State has now analyzed further animals from the 1979–80 season, bringing the sample for that year to 21 rather than the 16 described in the proposal. Of 30 animals killed in 1979–80, no heads or carcasses were recovered from five, and State biologists were unable to age an additional four. None of the three seasons is statistically different from any other in age distribution. Although not significantly different from those cited previously, the proportions in different age classes should be corrected as follows: Of the three-year sample of 43 animals, over 25% were 3.5 years or older, and nine individuals were 6.5 years or older, including three which were over ten years old. As indicated previously, a population with this many older animals is not characteristic of one heavily impacted by harvest. With 44 percent first-year animals, good reproduction and survival of young also help to provide assurance of no detriment to the population.

Comments Received

The International Convention Advisory Commission, at their meeting of May 30, 1980, discussed the proposal and heard comments from representatives of the U.S. Department of Justice, the State of Massachusetts, and Defenders of Wildlife, Inc. Both the Department of Justice and Defenders representatives addressed the issue of legal procedures, and the Massachusetts representative presented information in support of the request for approval of export of bobcat pelts taken in that State. A vote was taken on the proposal for each State; each finding proposed by the Service was supported by all voting Commissioners, the Chair abstaining because there was no tie.

A letter from the Wildlife Management Institute supported the proposed findings.

Defenders of Wildlife, Inc., the plaintiffs in the court case, submitted a letter opposing the proposed findings. Defenders claimed the proposal to be inadequate because it primarily addresses the new data received from the States in question and does not provide a comprehensive review of "the species throughout its range" or of past information from the States. This objection appears to be based on a misunderstanding of the purpose of that Notice, which was to give notice of new information and to seek comments in order to develop a new finding. The May 21, 1980, proposal clearly incorporated by reference all previous notices concerning bobcat export published by the ESSA. The ESSA previously addressed these States specifically as well as all other States allowing take of bobcats. The Court identified specific deficiencies it found for each of the States from which it denied export, and for that reason those points were specifically addressed by the States, as reported in the proposed finding. The new information is considered in the context of all other materials previously received from those States.

Defenders objected to the new population estimate made by Florida and reiterated their objections to that of Massachusetts. Exact population measurements are unattainable; the best estimates available serve only as guidelines that are useful in conjunction with other information, as is the case here. Both Florida and Massachusetts have made efforts to use the best data available for their estimates, and have also made their estimates conservatively to provide for safety margins. In adition, considerable additional information is available from both States (summarized in the proposal and in previous ESSA notices), which provides assurance of no detriment.

Defenders objected to the continued lack of a closed season in New Mexico, but they did not rebut the information provided by that State which demonstrates the secure status of bobcats there. Regulatory control by New Mexico provides both a means for improved data gathering as well as a means for placing limits on bobcat take if evidence from various monitoring and predictive activities suggests a need for additional restrictions.

Defenders objected to the proposal favoring export from Massachusetts because it was based in part on analysis of specimens taken during the 1979–80 season, rather than being limited to those from previous seasons. They characterized use of such data as approving export based "on the theory that the export of animals already dead is not detrimental to the survival of those still living." Such a policy has not been followed by either the ESSA or the Service. Defenders also suggested that consideration of the request violates the purpose of the Convention by not "halting kill by removing internationally generated economic incentives for killing." However, the Court Order preventing export from Massachusetts did not reduce take in that State, demonstrating the minor effect the possibility of export had there. As was cited in the proposal, almost all recent bobcat take in that State has been either incidental to trapping for other species or has resulted from hunting with dogs, neither of which would be strongly affected by export prices. The Service believes it has an obligation to consider all relevant information in making decisions on exports. The data are being used here to assess earlier findings by the ESSA that were overturned by the Court, and not to generate entirely new findings.

Defenders raised objections concerning the legal procedures involved with these findings. The

Service has consulted with the Department of the Interior's Office of the Solicitor and with the Department of Justice, which advise that the present course of action is proper.

Conclusion

Accordingly, the Service has determined that export of bobcat pelts taken in Florida, Massachusetts, and New Mexico during the 1979–80 harvest season will not be detrimental to the survival of the species. In view of the existing injunction against export of such pelts, the Service will not authorize their export under the Convention unless or until the injunction is modified or vacated.

Dated: September 9, 1980.

Lynn A. Greenwalt,

Director, U.S. Fish and Wildlife Service.

[FR Doc. 80-28306 Filed 9-11-80; 8:45 am]

BILLING CODE 4310-55-M

DEPARTMENT OF COMMERCE

National Oceanic and Atmospheric Administration

50 CFR Parts 611 and 656

Atlantic Mackerel Fishery; Approval of Amendment to Fishery Management Plan; Proposed Rulemaking

AGENCY: National Oceanic and Atmospheric Administration (NOAA)/ Commerce.

ACTION: Approval of revised amendment to plan; notice of proposed rulemaking.

SUMMARY: These regulations are proposed to implement the reserve provisions of Amendment No. 1 (Amendment) to the Atlantic Mackerel Fishery Management Plan (FMP). They provide criteria and procedures for the Regional Director to allocate Atlantic mackerel (*Scomber scombrus*) from the reserve, as appropriate, to the total allowable level of foreign fishing (TALFF).

DATE: Comments on the proposed regulations are invited for a 45-day period. All comments must be submitted in writing on or before October 27, 1980.

ADDRESS: All comments on the proposed regulations should be sent to: Mr. Allen E. Peterson, Jr., Regional Director, National Marine Fisheries Service, Federal Building, 14 Elm Street, Gloucester, Massachusetts 01930. Mark: "Comments on Proposed Mackerel Regulations" on the outside of the envelope.

SUPPLEMENTARY INFORMATION: On July 3, 1979, the Assistant Administrator partially approved the Atlantic Mackerel Fishery Management Plan (FMP), as submitted by the Mid-Atlantic Fishery Management Council (Council), in accordance with the Fishery Conservation and Management Act of 1976, as amended, 16 U.S.C. 1801 *et seq.* (ACT). On February 21, 1980, final regulations were published in the Federal Register (45 FR 11497).

On March 17, 1980, the Assistant Administrator partially approved Amendment No. 1 to the FMP, and published proposed and emergency regulations on April 1, 1980. The emergency regulations were extended for an additional 45-day period. Final regulations governing the approved portion of Amendment No. 1 were made effective on June 30, 1980 (45 FR 45291).

As implemented, Amendment No. 1 extends the FMP for one year. The amendment also: (1) Increases the optimum yield (OY) to 30,000 metric tons (mt); (2) increases the domestic annual harvest (DAH) to 20,000 mt; (3) eliminates the allocation of DAH between the domestic commercial and recreational fisheries; (4) increases the TALFF to 4,000 mt; and (5) establishes a reserve of 6,000 mt for seasonal allocation to TALFF if it is not expected to be harvested by the domestic fisheries. Section 656.22 governing "Allocation of Reserve" was reserved in the final regulations governing the fishery.

The Assistant Administrator disapproved the part of Amendment No. 1 which set out the criteria and procedures for the allocation of mackerel from the reserve to TALFF. On May 19, 1980, the Council submitted a revision to the disapproved provision. The revision would allow the Assistant Administrator to allocate the entire reserve, on the basis of domestic levels. Consideration of an allocation would begin at the end of September. A proposed allocation notice would be followed by a 15-day period for Council consultation and public comment. The timing of the allocation from reserve to TALFF posed no problems to foreign vessels, most of which harvest mackerel while fishing for other species. Statistics collected prior to the passage of the Act indicate that the major catches of mackerel by foreign fishermen occur from October to March. Thus, a late October or early November allocation would be timely.

These proposed regulations would establish a mechanism which allocates mackerel from the reserve to TALFF in a manner consistent with the provisions of the Act and the National Standards. Since the reserve is automatically available to the domestic fishery, a regulatory procedure for allocation from the reserve to the domestic annual harvest (DAH) is not necessary.

A supplemental Environmental Impact Statement (SEIS) for Amendment No. 1 was prepared (see Notice of Availability, 45 FR 37275). The Assistant Administrator has determined that this additional regulation does not alter the context or intensity of impacts described in the SEIS.

The amendment was determined to be nonsignificant under Executive Order 12044 and NOAA Directives Manual Chapter 21, Section 24. These proposed regulations to institute an allocation mechanism are also determined to be nonsignificant.

Section XIII-3, "Catch Limitations", Amendment No. 1, as revised by the Council and approved by the Assistant Administrator, is published as a part of this notice. The proposed mechanism to allocate the reserve to TALFF is set forth below as an amendment to Part 656. Because the allocation mechanism also affects the foreign fisheries, the regulations are also proposed as amendments to Part 611.

(16 U.S.C. 1801 *et seq*)

Signed at Washington, D.C., this 8th day of September, 1980.

Robert K. Crowell,

Deputy Executive Director, National Marine Fisheries Service.

PART 656—MACKEREL FISHERY OF THE NORTHWEST ATLANTIC OCEAN

50 CFR Part 656 is proposed to be amended by adding § 656.22 as follows:

§ 656.22 Allocations.

(a) *Projections.* During October, the Regional Director will project the total amount of mackerel that will be harvested by U.S. fishermen during the entire fishing year. In making this projection, the Regional Director will consider not only the actual reported domestic harvest through September 30, but also the ability and intent of domestic harvesters and processors to harvest and process Atlantic mackerel during the remainder of the fishing year.

(b) *Allocation of Reserve.* If the projected amount of mackerel to be harvested by U.S. fishermen exceeds the initial level of harvest specified in § 656.21(a), the Regional Director will leave the excess in the reserve to allow the U.S. fishery to continue without closure throughout the year. The Regional Director will allocate the rest of the reserve to the total allowable level of foreign fishing (TALFF). If the projected amount of mackerel to be harvested by U.S. fishermen does not exceed the initial level of harvest specified in § 656.21(a), the Regional

Director will allocate the entire reserve to TALFF.

(c) *Notice of allocation.* (1) By November 1 the Regional Director will publish a notice stating the amount of mackerel proposed to be allocated from reserve to TALFF in the Federal Register. The public will be given 15 days from the date of publication to comment on the proposed allocation. During the comment period, the Regional Director will consult with the Executive Director of the Mid-Atlantic Council on the consistency of the proposed allocation with the objectives of the FMP.

(2) The Regional Director will publish a final notice of the decision on allocation in the Federal Register. It will contain a summary of all comments and relevant information received during the comment period and the latest catch statistics available for Atlantic mackerel.

(d) *Subsequent allocations.* After the initial allocation decision is made, the Regional Director may allocate any remaining portion of the reserve to TALFF, if he determines that the domestic harvest will not attain the level projected under paragraph (a) of this section. Notice of subsequent allocations will be made according to the procedures stated in paragraph (c) of this section.

PART 611—FOREIGN FISHING

50 CFR Part 611 is proposed to be amended by adding § 611.52 as follows:

§ 611.52 Mackerel fishery.

(a) *Projections.* During October, the Regional Director will project the total amount of mackerel that will be harvested by U.S. fishermen during the entire fishing year. In making this projection, the Regional Director will consider not only the actual reported domestic harvest through September 30, but also the ability and intent of domestic harvesters and processors to harvest and process Atlantic mackerel during the remainder of the fishing year.

(b) *Allocation of Reserve.* If the projected amount of mackerel to be harvested by U.S. fishermen exceeds the initial level of harvest specified as DAH in Appendix 1 to § 611.20, the Regional Director will leave the excess in the reserve to allow the U.S. fishery to continue without closure throughout the year. The Regional Director will allocate the rest of the reserve to the total allowable level of foreign fishing (TALFF). If the projected amount of mackerel to be harvested by U.S. fishermen does not exceed the initial level of harvest specified as DAH in Appendix 1 to § 611.20, the Regional Director will allocate the entire reserve to TALFF.

(c) *Notice of allocation.* (1) By November 1 the Regional Director will publish a notice stating the amount of mackerel proposed to be allocated from reserve to TALFF in the Federal Register. The public will be given 15 days from the date of publication to comment on the proposed allocation. During the comment period, the Regional Director will consult with the Executive Director of the Mid-Atlantic Council on the consistency of the proposed allocation with the objectives of the FMP.

(2) The Regional Director will publish a final notice of the decision on allocation in the Federal Register. It will contain a summary of all comments and relevant information received during the comment period and the latest catch statistics available for Atlantic mackerel.

(d) *Subsequent allocations.* After the initial allocation decision is made, the Regional Director may allocate any remaining portion of the reserve to TALFF, if he determines that the domestic harvest will not attain the level projected under paragraph (a) of this section. Notice of subsequent allocations will be made according to the procedures stated in paragraph (c) of this section.

Atlantic Mackerel Fishery Management Plan

Section XIII—3 is added to the FMP as follows:

XIII-3. *Catch Limitations* (as revised by Council).

The fishing year for mackerel shall be the twelve (12) month period beginning April 1.

The annual Total Allowable Level of Foreign Fishing (TALFF) and annual level of harvest by vessels of foreign nations is initially established at 4,000 metric tons (m.t.) for mackerel. The annual level of harvest by vessels of foreign nations corresponds to TALFF, so any adjustments to TALFF will result in adjustments to the annual level of harvest by vessels of foreign nations.

The Domestic Annual Harvest (DAH) and annual level of harvest by vessels of the United States is initially established at 20,000 m.t. for mackerel. The annual level of harvest by vessels of the United States corresponds to DAH, so any adjustments to DAH will result in adjustments to the annual level of harvest by vessels of the United States.

A Reserve of 6,000 m.t. for mackerel is established.

It is the policy of the Mid-Atlantic Fishery Management Council that the Assistant Administrator for Fisheries, NOAA, be allowed to temporarily increase the DAH and TALFF for mackerel during the fishing year based on the criteria specified by the Council as set forth below. Such additional amounts of mackerel shall come from the Reserve for mackerel. The Council further establishes that any allocation from the Reserve to TALFF will be made in consultation with the Council and be consistent with the objectives of this management plan for the mackerel fishery. At the end of the fishing year (31 March), DAH, TALFF, and Reserve shall revert to the amounts specified by the Mid-Atlantic Fishery Management Council in Section XII-5 of this FMP.

The Council's criteria to guide the Assistant Administrator in the allocation process are as follows:

Allocations From Reserve

The National Marine Fisheries Service (NMFS) shall review reported domestic harvest (including off-loading at sea) for mackerel on a monthly basis. Domestic harvest shall be determined based upon vessel and processor reports required by Section XIV of this FMP, additional statistical port sampling data collected by NMFS, and surveys of marine angler catches.

If the estimated amount of Atlantic mackerel to be harvested by U.S. fishermen exceeds DAH, the Assistant Administrator shall apportion a sufficient quantity of Atlantic mackerel from Reserve to DAH. Such allocation shall ensure that the U.S. fishery for Atlantic mackerel will not be subject to closure except in the event that domestic landings of that species threaten to exceed DAH plus that part of the Reserve for Atlantic mackerel which has not been allocated to the TALFF.

At the end of the first six months of the fishing year, the Assistant Administrator shall consider an allocation of Atlantic mackerel from its Reserve to TALFF. The Assistant Administrator shall project the total amount of Atlantic mackerel that will be harvested by U.S. fishermen during the entire fishing year. In making these projections the Assistant Administrator shall consider not only the actual reported domestic harvest, but also the ability and intent of domestic harvestors and processors to harvest and process Atlantic mackerel.

Any allocations made under this provisions shall be timely, and implemented in a manner which facilitates the conduct of the fishery with a minimum of disruption.

The following procedures shall be followed by the Assistant Administrator in making an allocation of Atlantic mackerel from Reserve to TALFF: A notice which states the amount of Atlantic mackerel proposed to be allocated shall be published in the Federal Register. The public shall be given a 15-day comment period from the date of publication. During this time the Assistant Administrator or his designee shall consult with the appropriate committee of the Council to ensure that the proposed allocation is consistent with the objectives contained in the FMP. The Assistant Administrator shall publish a final notice of allocation in the Federal Register to accomplish any allocation. This notice shall be published in a timely manner and contain a summary of all comments and relevant information received during the comment period and the latest catch statistics available for Atlantic mackerel.

The Council anticipates that the Secretary, after consultation with the Council, will

implement the intent of the FMP to restrict U.S. harvest in excess of DAH plus that part of the Reserve which has not been allocated to the TALFF by imposing such measures including, but not limited to, trip limitations, quarterly or half yearly quotas, and closed areas, as the Secretary deems appropriate in the final regulations. Such measures should ensure the achievement of OY in a manner that does not result in a sudden dislocation of those involved in the fishery. The Council intends that these measures will enable fishermen to redirect their effort in a timely manner should a closure of the fishery or a substantial diminution in allowable catch become necessary.

[FR Doc. 80-28186 Filed 9-11-80; 8:45 am]

BILLING CODE 3510-22-M

Notices

Federal Register
Vol. 45, No. 179
Friday, September 12, 1980

This section of the FEDERAL REGISTER contains documents other than rules or proposed rules that are applicable to the public. Notices of hearings and investigations, committee meetings, agency decisions and rulings, delegations of authority, filing of petitions and applications and agency statements of organization and functions are examples of documents appearing in this section.

DEPARTMENT OF AGRICULTURE

Agricultural Stabilization and Conservation Service

Feed Grain Donations for the Cheyenne River Indian Tribe in South Dakota

Pursuant to the authority set forth in Section 407 of the Agricultural Act of 1949, as amended (7 U.S.C. 1427) and Executive Order 11336, I have determined that:

1. The chronic economic distress of the needy members of the Cheyenne River Indian Tribe in South Dakota has been materially increased and become acute because of severe and prolonged drought substantially reducing range forage and hay production, thereby creating a serious shortage of feed and causing increased economic distress. This reservation is designated for Indian use and is utilized by members of the Cheyenne River Indian Tribe for grazing purposes.

2. The use of feed grain or products thereof made available by the Commodity Credit Corporation for livestock feed for such needy members of this tribe will not displace or interfere with normal marketing of agricultural commodities.

3. Based on the above determinations, I hereby declare the reservation and grazing lands of this tribe to be acute distress areas and authorize the donation of feed grain owned by the Commodity Credit Corporation to livestock owners who are determined by the Bureau of Indian Affairs, Department of the Interior, to be needy members of the tribe utilizing such lands. These donations by the Commmodity Credit Corporation may commence October 15, 1980, and shall be made available through May 15, 1981, or to such other time as may be stated in a notice issued by the Department of Agriculture.

Signed at Washington, D.C. on September 2, 1980.

John W. Goodwin,

Acting Administrator, Agricultural Stabilization and Conservation Service.

[FR Doc. 80-27745 Filed 9-11-80; 8:45 am]
BILLING CODE 3410-05-M

Food Safety and Quality Service

National Environmental Policy Act Procedures, Implementation; FSQS Guidelines

AGENCY: Food Safety and Quality Service (FSQS), USDA.

ACTION: Notice of proposed guidelines.

SUMMARY: This notice publishes the proposed FSQS guidelines concerning implementation of the procedures contained in the National Environmental Policy Act (NEPA) and invites comments from the public. These guidelines were written to comply with the regulations of the Council on Environmental Quality (CEQ), and with the regulations of the Department which require individual Government agencies to develop their own procedures to implement the NEPA. The purpose of this notice is to give the public the opportunity to comment on the procedures proposed by FSQS in accordance with the CEQ and USDA regulations.

DATE: Comments must be received on or before November 12, 1980.

ADDRESS: Written comments to: Regulations Coordination Division, Attn: Annie Johnson, Room 2637, South Agriculture Building, Food Safety and Quality Service, U.S. Department of Agriculture, Washington, DC 20250. For additional information on comments, see supplementary information.

FOR FURTHER INFORMATION CONTACT: Mr. Paul Ragan, Director, Regulations Coordination Division, Compliance Program, Food Safety and Quality Service, U.S. Department of Agriculture, Washington, DC 20250, (202) 447-3317. The Draft Impact Analysis describing the options considered in developing this notice of proposed guidelines and the impact of implementing each option is available on request from the above-named individual.

SUPPLEMENTARY INFORMATION:

Significance

This proposed action has been reviewed under USDA procedures established in Secretary's Memorandum 1955 to implement Executive Order 12044, and has been classified "not significant."

Comments

Interested persons are invited to submit comments concerning this proposal. Written comments must be sent in duplicate to the Regulations Coordination Division. Comments should bear reference to the date and page number of this issue of the Federal Register. All comments made pursuant to this notice will be made available for public inspection during regular business hours.

Background

The National Environmental Policy Act (NEPA) of 1969, as amended, (42 U.S.C. 4321 *et seq.* (1976)) establishes national policies and goals for the protection of the environment. Section 102(2)(C) of the NEPA (42 U.S.C. 4332(2)(C)) contains certain requirements directed toward the attainment of such goals. In particular, all Federal agencies are required to give appropriate consideration to the environmental effects of their proposed actions in their decisionmaking and to prepare detailed environmental statements on proposals for legislation and other major Federal actions significantly affecting the quality of the human environment.

On November 13, 1974, pursuant to the NEPA the Animal and Plant Health Inspection Service (APHIS) of the U.S. Department of Agriculture published "Guidelines for the Preparation of Environmental Impact Statements" in the Federal Register (39 FR 40048-40052). Those guidelines were applicable to some programs now administered by FSQS.

Subsequently, Executive Order 11911, dated May 24, 1977, directed the Council on Environmental Quality (CEQ) to issue regulations to implement the procedural provisions of the NEPA. CEQ published the NEPA compliance regulations (40 CFR 1501-1508) in the Federal Register on November 29, 1978 (43 FR 55978-56007), which require individual Federal agencies to adopt and publish implementation procedures for NEPA. The United States Department of

Agriculture (USDA) published regulations (7 CFR Part 3100) in the Federal Register on July 30, 1979 (44 FR 44802–44803), further requiring each USDA agency to develop its own NEPA procedures. This notice presents the proposed FSQS implementation of NEPA procedures which, if adopted, would supersede the present APHIS guidelines for programs administered by FSQS. The proposed procedures outlined in this notice must be read in conjunction with the CEQ regulations and the USDA regulations.

This notice proposes procedures for use by FSQS decision makers that should lead to decisions in which environmental concerns are fully reviewed and ensure public involvement in the NEPA process. The proposal designates major decision points for major Federal actions significantly affecting the environment which are not categorically excluded by CEQ or USDA regulations. The proposal also provides procedures for agency preparation of an environmental impact statement (EIS) and supplemental statements, and includes procedures for use in emergency situations. It outlines a proposed plan for public involvement in the decisionmaking process, and also provides a comprehensive list of reference sources for use in preparing an EIS.

Accordingly, the proposed FSQS guidelines would read as follows:

Implementation of NEPA Procedures; FSQS Guidelines

General

Sec.
1 Background authority.
2 Purpose.
3 Applicability.

Agency Implementing Procedures

4 Early involvement in Private, State and local activities requiring Federal approval.
5 Agency decisionmaking procedures.
6 Environmental assessment and EIS preparation.
7 Tiering.
8 Implementation of agency determination.
9 Emergency procedures.
10 Public involvement.
11 Responsibilities.
12 Reference source for EIS preparation.

1. *Background authority.* a. The National Environmental Policy Act (NEPA) of 1969, as amended, (42 U.S.C. 4321 *et seq.* (1976)) establishes national policies and goals for the protection of the environment. Section 102(2)(C) of the NEPA (42 U.S.C. 4332(2)(C)) contains certain requirements directed toward the attainment of such goals. In particular, all Federal agencies are required to give appropriate consideration to the environmental effects of their proposed actions in their decisionmaking and to prepare detailed environmental statements on proposals for legislation and other major Federal actions significantly affecting the quality of the human environment.

b. Executive Order 11911 of May 24, 1977, directed the Council on Environmental quality (CEQ) to issue regulations to implement the procedural provisions of the NEPA. Accordigly, the CEQ issued final NEPA compliance regulations (40 CFR 1500–1508) on November 29, 1978 (43 FR 55078–56007), which are binding on all Federal agencies as of July 30, 1979. These regulations provide that each Federal agency shall, as necessary, adopt implementing procedures to supplement the regulations. Section 1507.3(b) of the CEQ regulations identifies additional sections of the regulations which must be addressed specifically in agency procedures.

c. The U.S. Department of Agriculture's regulations (7 CFR Part 3100) published in the Federal Register on July 30, 1979 (44 FR 44802–44803), further requires each USDA agency to develop its own NEPA implementation procedures. In addition to the CEQ requirements, the USDA regulations also identify further sections of the CEQ regulations which must be included within the USDA agencies' procedures. These regulations are codified in Title 7 of the Code of Federal Regulations, Part 3100.

2. *Purpose.* The purpose of this Part is to establish FSQS procedures to supplement the CEQ regulations (40 CFR 1501–1508) and to provide for the implementation of those required provisions identified in section 1507.3(b) of the CEQ regulations and in the applicable USDA regulations (7 CFR Part 3100). The terms used in these FSQS procedures have the same meaning as in the CEQ regulations.

3. *Applicability.* This Part applies to all organizational elements and programs of FSQS and supersedes "Guidelines for the Preparation of Environmental Impact Statements" published by APHIS on November 13, 1974, in the Federal Register (39 FR 40048–40052) for such programs.

4. *Early involvement in private, State and local activities requiring Federal approval.* FSQS will provide for early involvement in actions which, while planned by private applicants or other non-Federal entities, require some form of Agency approval. The term "applicant" refers to those private or otherwise non-Federal entities which require agency approval (i.e., license, permit, grant of inspection, etc.) in order to operate and, therefore, must apply for this approval. To facilitate compliance with these requirements, FSQS will:

a. Provide guidance on a project-by-project basis to applicants seeking assistance from FSQS.

b. Consult with appropriate parties to initiate and coordinate the necessary environmental assessments upon receipt of an application, or notification that an application will be filed for FSQS approval.

5. *Agency decisionmaking procedures.* a. FSQSA will ensure adequate consideration of environmental documents in agency decisionmaking. To implement these requirements, the Agency shall:

(1) Consider all relevant environmental documents in evaluating proposals for agency action.

(2) Make all relevant environmental documents, comments, and responses part of the administrative record in rulemaking or adjudicatory proceedings.

(3) Ensure that all relevant environmental documents, comments, and responses accompany the proposal through existing agency review processes.

(4) Consider only those alternatives discussed in the relevant environmental documents when evaluating proposals for agency action.

(5) Where an EIS has been prepared, consider the specific altenatives analyzed in the EIS when evaluating the proposal which is the subject of the EIS.

b. FSQS officials shall ensure the proposals for new or existing projects, plans, and programs not categorically excluded from the NEPA process in the Department's regulations (7 CFR Part 3100) have designated major decision points. All environmental documents will accompany proposals as they are reviewed by appropriate decisionmakers at each of the decision points. Those decision points are:

(1) Where new or existing programs may cause significant adverse effects on the environment.

(2) Upon completion of environmental assessments.

(3) At the finding of no significant impact.

(4) Before preparation of an EIS is begun.

(5) Upon completion of a draft EIS.

(6) Upon evaluation of comments and completion of final EIS.

The decisionmaking process will not be concluded until a record of decision is prepared by the agency and an opportunity has been made available to the public to obtain copies thereof as announced by notice in the Federal Register. All environmental, documents, including supplements, will be made

part of the record of decision prepared by FSQS which represents the FSQS formal administrative record. This file will be available for public evaluation of alternatives considered

6. *Environmental assessment and EIS preparation.* Section 102(2)(C) of the NEPA (42 U.S.C. 4332(2)(C)) requires that an EIS be prepared and submitted with every recommendation or report on proposals for legislation and rulemaking and for other major Federal actions significantly affecting the quality of the human environment. FSQS has determined that an environmental assessment will be conducted to determine the need for an EIS and recognizes the following three typical classes of action concerning the preparation of an environmental assessment or an EIS: (a) actions normally not requiring an environmental assessment or an EIS; (b) actions requiring an environmental assessment but not an EIS; and (c) actions normally requiring an EIS. The criteria for identifying each of these classes is set forth as follows:

a. *Actions normally not requiring an environmental assessments or EIS.* Categories of actions which have been determined not to have a significant effect on the human environment will be excluded from the NEPA review. USDA has prescribed categorical exclusions under section 3100.22 of its regulations (7 CFR Part 3100). FSQS will use no categorical exclusions other than those listed in the USDA regulations.

b. *Actions requiring an environmental assessment but not an EIS.* FSQS officials will make an environmental assessment for legislative proposals originating in FSQS, for each proposed new action and for each proposed change to on-going program plans and projects, except if categorically excluded. The assessment will be the basis for the Agency's determination to prepare an EIS or publish a finding of no significant impact. Where the environmental assessment concludes that there is no significant impact, an EIS will not be prepared.

In addition, FSQS officials will schedule for environmental assessments those on-going projects or programs, which, because of their age and ge unchanging, nature, have not been reviewed for environmental impact in the past 5 years. It is the Agency goal that every project or program be reviewed for environmental impact at least every 5 years.

c. *Actions normally requiring an EIS.* An EIS will be required where the environmental assessment concludes that the Agency activity is a major Federal action significantly affecting the human environment. The following categories of criteria are to be considered in an environmental assessment in determining whether proposed or existing FSQS projects and progams will normally require an EIS:

(1) Degree of ecosystem disturbance—onsite and offsite effects.

(2) Irreversible effects on basic resources.

(3) Cumulative effects of many small actions.

(4) Chain reaction or secondary effects of interrelated activities.

(5) National versus regional and local implications.

(6) Uniqueness or rareness of resources.

(7) Scope of anticipated public involvement and controversy.

(8) Interaction with other Federal projects and projects of the private sector.

7. *Tiering.* When appropriate, a broad EIS will be prepared for repetitive program actions.

8. *Implementation of agency determination.* FSQS will provide for monitoring of the activities of private and other non-Federal entities requiring agency approval to assure that agency decisions are carried out. Mitigation and other conditions established in the environmental impact statement or during its review and committed as part of the decision will be implemented by FSQS and will:

(1) Include appropriate conditions of actions on mitigation.

(2) Condition the funding of actions on mitigation.

(3) Upon request, inform cooperating or commenting agencies on progress in carrying out mitigation measures which they have proposed and which were adopted by FSQS.

(4) Upon request, make available to the public the results of relevant monitoring.

9. *Emergency procedures.* Where circumstances require immediate action such as where a threat to public health or safety exists, and that action has significant environmental impact, section 1506.11 of the CEQ regulations will be applicable. FSQS officials will notify the Department Coordinator for the Office of Environmental Quality when consulting with the CEQ about alternate arrangements.

10. *Public involvement.* a. FSQS officials shall inform and involve the public when: (1) Substantive changes in programs have significant adverse effects on the human environment.

(2) FSQS intends to prepare an EIS and request participation in the scoping process. The scoping process is defined in 40 CFR 1501.7 of the CEQ regulations.

(3) A draft EIS, final EIS, or finding of no significant impact is available, and

(4) The record of decision is available.

b. FSQS officials will maintain distribution lists of interested persons (e.g., Federal, State, and local agencies, interested industry representatives, national and local organizations, and private citizens, etc.). The lists will be amended as additional interested persons are identified. Mailing to those on the distribution list will be made early and at critical stages in the NEPA process where public input is appropriate. In addition, FSQS will make timely use of direct verbal contact, meetings, printed materials, news media, public notices and hearings, and any other appropriate means for increasing public participation in evaluating the environmental impact of agency actions.

c. Wherever public involvement and information described in paragraph (a) of this section is applicable, the agency will publish in a timely manner those specific addresses where additional material and information may be obtained through use of the informational media as outlined in subpart 10(b) above. General inquiries concerning FSQS environmental activities may be addressed to the Regulations Coordination Division, Compliance Program, Food Safety and Quality Service, U.S. Department of Agriculture, Washington, DC 20250.

11. *Responsibilities.* a. The Deputy Administrators are responsible for preparation of EIS's within their respective functional areas.

b. FSQS officials conducting field operations are responsible for reporting any unusual environmental conditions to their respective regional directors. If necessary, regional directors will obtain guidance from the responsible FSQS staff officer. Except for emergency situations, the field official should report the unusual condition before taking any action.

12. *Reference source for EIS preparation.* Actions taken under these proposed FSQS guidelines are subject to the provisions of applicable laws and authorities. The following authorities, directives, and regulations have been published and are the principle reference sources for preparing and processing EISs:

a. Section 102(2), National Environmental Policy Act of 1969, as amended (42 U.S.C. 4321–4347).

b. Executive Order 11514, dated March 5, 1970, as amended by Executive Order 11541, dated July 1, 1970, and as further amended by Executive Order 11991, dated May 24, 1977.

c. Executive Order 11752, dated December 17, 1973, on the Prevention, Control, and Abatement of Environmental Pollution at Federal Facilities.

d. Environmental Protection Agency Regulations on the Preparation of Environmental Impact Statements (40 CFR 6).

e. CEQ Regulations for Implementing the Procedural Provisions of the National Environmental Policy Act (40 CFR 1500–1508).

f. Clean Air Act (42 U.S.C. 1857 *et seq.*).

g. Federal Water Pollution Control Act (33 U.S.C. 1251 *et seq.*).

h. Solid Water Disposal Act of 1976 (42 U.S.C. 3251 *et seq.*).

i. Noise Control Act of 1972 (42 U.S.C. 4901 *et seq.*).

j. Federal Insecticide, Fungicide, and Rodenticide Act as amended by the Federal Environmental Pesticide Control Act of 1972 (7 U.S.C. 135 *et seq.*).

k. Secretary's Memorandum No. 1662, Supplement 8, June 28, 1976.

l. Secretary's Memorandum No. 1695, May 24, 1970, and supplements.

m. Safe Drinking Act (42 U.S.C. 300f).

n. National Historic Preservation Act (16 U.S.C. 470f).

o. Executive Order 12044, "Improving Government Regulations"; Secretary's Memorandum No. 1955.

p. Endangered Species Act of 1973, as amended, (16 U.S.C. 1531–1543).

q. Executive Order 12114, "Environmental Effects Abroad of Major Federal Actions," January 4, 1979.

Done at Washington, D.C., on: September 5, 1980.

Donald L. Houston,

Administrator, Food Safety and Quality Service.

[FR Doc. 80-28004 Filed 9-11-80; 8:45 am]

BILLING CODE 3410-DM-M

Rural Electrification Administration

Hoosier Energy Division; Finding of No Significant Impact

Notice is hereby given that the Rural Electrification Administration (REA) has prepared a Finding of No Significant Impact (FONSI) which concludes there is no need for REA to prepare an Environmental Impact Statement in connection with proposed financial assistance by REA to the Hoosier Energy Division (HED) to assist the Illinois Central Gulf (ICG) Railroad in upgrading and repairing a 47-mile stretch of railroad track between Lis, Illinois, and New Lebanon, Indiana.

The stretch of track between Lis, Illinois, and New Lebanon, Indiana, is in need of repair and upgrading to handle unit train movements of coal from Freeman-United Coal Company's Crown No. 3 Mine near Farmersville, Illinois, to HED's Merom Generating Station in Sullivan County, Indiana. A Borrower's Environmental Report (BER) was prepared by HED in accordance with REA guidelines. An Environmental Assessment (EA) concerning possible REA financial assistance to HED was prepared by REA in August 1980.

Federally listed and proposed for listing threatened and endangered species, prime agricultural lands, wetlands, floodplains, archaeological and historic sites, and other potential environmental impacts of the proposed project were adequately considered in the HED and REA's EA.

REA's independent evaluation of the proposed project leads it to conclude that the proposed financial assistance for the project does not represent a major Federal action that will significantly affect the quality of the human environment. Based upon this independent evaluation, the REA's EA and reviw of HED's BER, a FONSI was reached in accordance with REA Bulletin 20–21:320–21.

Alternatives investigated by HED include (1) no action; (2) delivery of coal by heavy duty trucks over the shortest route in the existing highway system; and (3) three alternative railroad routes for the rail alternative of coal delivery. The rail alternative routes include: (1) existing ICG track between Lis, Illinois, and New Lebanon, Indiana, via Norfolk and Western (N&W) trackage between Springfield and Decatur, Illinois; (2) ICG track between Lis, Illinois, and New Lebanon, Indiana, via Burlington Northern (BN) trackage between Litchfield and Sorento, Illinois, and N&W trackage between Sorento and Neoga, Illinois, and (3) ICG track between Lis, Illinois, and New Lebanon, Indiana, via BN trackage from Litchfield to Shattuc, Illinois; Baltimore and Ohio trackage from Shattuc to Vincennes, Indiana, and Louisville and Nashville trackage from Vincennes to Sullivan, Indiana.

Copies of REA's FONSI, REA's EA, and HED's BER may be obtained on request to Mr. Joe S. Zoller, Assistant Administrator—Electric, Rural Electrification Administration, U.S. Department of Agriculture, Washington, D.C. 20250. This information is also available in HED's offices in Bloomington, Indiana.

Final REA action, with respect to this matter, will be taken only after REA has reached satisfactory conclusions with respect to its envirionmental effects and after procedural requirements set forth in the National Environmental Policy Act of 1969 have been met.

Dated at Washington, D.C., this 2nd day of September, 1980.

Robert W. Feragen,

Administrator, Rural Electrification Administration.

[FR Doc. 80-27746 Filed 9-11-80; 8:45 am]

BILLING CODE 3410-15-M

Soil Conservation Service

Little River Watershed, S.C.; No Significant Environmental Impact

AGENCY: Soil Conservation Service, Department of Agriculture.

ACTION: Notice of finding of no significant impact.

FOR FURTHER INFORMATION CONTACT: Mr. George E. Huey, State Conservationist, Soil Conservation Service, 1835 Assembly Street, Room 950, Columbia, South Carolina 29201, telephone number (803) 765–5681.

NOTICE: Pursuant to Section 102(2)(C) of the National Environmental Policy Act of 1969; the Council on Environmental Quality Guidelines (40 CFR Part 1500); and the Soil Conservation Service Guidelines (7 CFR Part 650); the Soil Conservation Service, U.S. Department of Agriculture, gives notice that an environmental impact statement is not being prepared for the Little River Watershed, Laurens County, South Carolina.

The environmental assessment of this federally assisted action indicates that the project will not cause significant local, regional, or national impacts on the environment. As a result of these findings, Mr. George E. Huey, State Conservationist, has determined that the preparation and review of an environmental impact statement is not needed for this project.

The measure concerns a plan for floodwater damage reduction in the city of Laurens, South Carolina. The planned works of improvement include enlargement of about 1.2 miles of channel through the city of Laurens to reduce flooding of homes and businesses. The enlarged channel will be lined with rock riprap to insure stability. Excavated spoil will be spread in the flood plain and sloped toward the channel to insure proper drainage. Side inlet pipes will be installed, as needed, to allow water to enter the channel without causing erosion. All areas disturbed will be revegetated immediately after construction. Installation of the channel, including spoil areas, will require easements on 42 acres.

The Notice of Finding of No Significant Impact (FNSI) has been forwarded to the Environmental Protection Agency. The basic data developed during the environmental assessment are on file and may be reviewed by contacting Mr. George E. Huey. The FNSI has been sent to various Federal, State, and local agencies and interested parties. A limited number of copies of the FNSI are available to fill single copy requests at the above address.

Implementation of the proposal will not be initiated until 30 days after the date of this publication in the Federal Register.

(Catalog of Federal Domestic Assistance Program No. 10.904, Watershed Protection and Flood Prevention Program. Office of Management and Budget Circular A-95 regarding State and local clearinghouse review of Federal and federally assisted programs and projects is applicable.)

Dated: August 28, 1980.

James W. Mitchell,

Associate Deputy Chief for Natural Resource Projects.

[FR Doc. 80-28231 Filed 9-11-80; 8:45 am]

BILLING CODE 3410-16-M

Powell Creek Watershed, Alabama; No Significant Environmental Impact

AGENCY: Soil Conservation Service, U.S. Department of Agriculture.

ACTION: Notice of Finding of No Significant Impact.

FOR FURTHER INFORMATION CONTACT: Mr. William B. Lingle, State Conservationist, Soil Conservation Service, 138 South Gay Street, Auburn, Alabama 36830, telephone number (205) 821-8070.

NOTICE: Pursuant to Section 102(2)(C) of the National Environmental Policy Act of 1969; the Council on Environmental Quality Guidelines (40 CFR Part 1500); and the Soil Conservation Service Guidelines (7 CFR Part 650); the Soil Conservation Service, U.S. Department of Agriculture, gives notice that an environmental impact statement is not being prepared for flood prevention works in the Powell Creek Watershed, Marengo and Hale Counties, Alabama.

The environmental evaluation of this federally assisted action indicates that the proposed measures will not cause significant adverse local, regional, or national impacts on the environment. As a result of these findings, Mr. William B. Lingle, State Conservationist, has determined that the preparation and review of an environmental impact statement are not needed for this action.

The Powell Creek Watershed project was approved for operations by Congress on July 31, 1961. Subsequent to this approval, and in response to the National Environmental Policy Act and specific agency guidelines and regulations, the project was reevaluated and modified to comply with current environmental policies. A multi-agency team of biologists evaluated the modified project and determined that adverse impacts could be avoided by eliminating all channel work and modifying the design of the floodwater retarding structures.

The basic data developed during the environmental evaluation and environmental assessment are on file and may be reviewed by interested parties by contacting Mr. William B. Lingle, State Conservationist, Soil Conservation Service, 138 South Gay Street, Auburn, Alabama 36830, telephone number (205) 821-8070. An environmental impact appraisal has been prepared and sent to various Federal, State, and local agencies and interested parties. A limited number of copies of the environmental impact appraisal are available to fill single copy requests at the above address.

No administrative action on implementation of the proposal will be taken until 30 days after the date of this publication in the Federal Register.

(Catalog of Federal Domestic Assistance Program No. 10.904, Watershed Protection and Flood Prevention Program. Office of Management and Budget Circular A-95 regarding State and local clearinghouse review of Federal and federally assisted programs and projects is applicable.)

Dated: August 28, 1980.

James W. Mitchell,

Associate Deputy Chief for Natural Resource Projects.

[FR Doc. 80-28233 Filed 9-11-80; 8:45 am]

BILLING CODE 3410-16-M

DEPARTMENT OF COMMERCE

National Oceanic and Atmospheric Administration

Marine Mammals; Issuance of Permit

On August 4, 1980, Notice was published in the Federal Register (45 FR 51630), that an application had been filed with the National Marine Fisheries Service by Tel Aviv Dolphinarium, Gibor House, 16th Floor, Manshia, Tel Aviv, Israel to obtain six (6) beached and stranded California sea lions (*Zalophus californianus*) and four (4) beached and stranded harbor seals (*Phoca vitulina*) for the purpose of public display.

Notice is hereby given that on September 8, 1980, and as authorized by the provisions of the Marine Mammal Protection Act of 1972 (16 U.S.C. 1361-1407) the National Marine Fisheries Service issued a Public Display Permit for the above activities to Tel Aviv Dolphinarium, subject to certain conditions set forth therein.

The Permit is available for review in the following offices:

Assistant Administrator for Fisheries, National Marine Fisheries Service, 3300 Whitehaven Street NW., Washington, D.C.; and

Regional Director, National Marine Fisheries Service, Southwest Region, 300 South Ferry Street, Terminal Island, California 90731.

Dated: September 8, 1980.

Robert K. Crowell,

Deputy Executive Director, National Marine Fisheries Service.

[FR Doc. 80-28205 Filed 9-11-80; 8:45 am]

BILLING CODE 3510-22-M

Marine Mammals; Receipt of Application for Permit

Notice is hereby given that an Applicant has applied in due form for a Permit to take marine mammals as authorized by the Marine Mammal Protection Act of 1972 (16 U.S.C. 1361-1407), and the Regulations Governing the Taking and Importing of Marine Mammals (50 CFR Part 216).

1. Applicant:
a. Name: G&G Enterprises, Ltd (P257)
b. Address: 628 North Broadway Street, Milwaukee, Wisconsin
2. Type of Permit: Public Display
3. Name and Number of Animals:
Atlantic bottlenose dolphins (Tursiops truncatus) 3
4. Type of Take:
Capture for public display at the Public Natatorium, 1646 South 4th Street, Milwaukee, Wisconsin
5. Location of Activity: Choctowhatchee Bay or East Pass, Destin, Florida
6. Period of Activity: 2 years

The arrangement and facilities for transporting and maintaining the marine mammals requested in the above described application have been inspected by a licensed veterinarian, who has certified that such arrangements and facilities are adequate to provide for the well-being of the marine mammals involved.

Concurrent with the publication of this notice in the Federal Register the Secretary of Commerce is forwarding copies of this application to the Marine Mammal Commission and the Committee of Scientific Advisors.

Written data or views, or requests for a public hearing on this application should be submitted to the Assistant Administrator for Fisheries, National Marine Fisheries Service, Department of Commerce, Washington, D.C. 20235, on or before October 14, 1980. Those individuals requesting a hearing should set forth the specific reasons why a hearing on this particular application would be appropriate. The holding of such hearing is at the discretion of the Assistant Administrator for Fisheries.

All statements and opinions continued in this application are summaries of those of the Applicant and do not necessarily reflect the views of the National Marine Fisheries Service.

Documents submitted in connection with the above application are available for review in the following offices:

Assistant Administrator for Fisheries, National Marine Fisheries Service, 3300 Whitehaven Street NW., Washington, D.C.;
Regional Director, National Marine Fisheries Service, Southeast Region, 9450 Koger Boulevard, St. Petersburg, Florida 33702; and
Regional Director, National Marine Fisheries Service, Northeast Region, 14 Elm Street, Federal Building, Gloucester, Massachusetts 01930.

Dated: September 5, 1980.

Richard B. Roe,

Acting Director Office of Marine Mammals and Endangered Species National Marine Fisheries Service.

[FR Doc. 80-28206 filed 9-11-80; 8:45 am]

BILLING CODE 3510-22-M

Marine Mammals; Receipt of Application for Permit

Notice is hereby given that an Applicant has applied in due form for a Permit to take marine mammals as authorized by the Marine Mammal Protection Act of 1972 (16 U.S.C. 1361–1407), and the Regulations Governing the Taking and Importing of Marine Mammals (50 CFR Part 216).

1. Applicant:

a. Name: Dr. Gerald Kooyman (P16F), Physiological Research Laboratory

b. Address: Scripps Institution of Oceanography, University of California, San Diego, La Jolla, CA 92093

2. Type of Permit: Scientific Research

3. Name and Number of Animals:

Atlantic bottlenose dolphins (Tursiops truncatus) 2
Harbor seals (Phoca vitulina) 10
California sea lions (Zalophus californianus) 15

4. Type of Take:

All species will undergo physiological tests involving biopsies, and blood test to determine ventilation tidal volume, respiration rates and heart rates. Pinnipeds will be beached/stranded animals.

5. Location of Activity: California, Florida Coasts, and Gulf of Mexico

6. Period of Activity: 5 years

The arrangements and facilities for transporting and maintaining the marine mammals requested in the above described application have been inspected by a licensed veterinarian, who has certified that such arrangements and facilities are adequate to provide for the well-being of the marine mammals involved.

Concurrent with the publication of this notice in the Federal Register the Secretary of Commerce is forwarding copies of this application to the Marine Mammal Commission and the Committee of Scientific Advisors.

Written data or views, or requests for a public hearing on this application should be submitted to the Assistant Administrator for Fisheries, National Marine Fisheries Service, Department of Commerce, Washington, D.C. 20235, on or before October 14, 1980. Those individuals requesting a hearing should set forth the specific reasons why a hearing on this particular application would be appropriate. The holding of such hearing is at the discretion of the Assistant Administrator for Fisheries.

All statements and opinions contained in this application are summaries of those of the Applicant and do not necessarily reflect the views of the National Marine Fisheries Service.

Documents submited in connection with the above application are available for review in the following offices:

Assistant Administrator for Fisheries, National Marine Fisheries Service, 3300 Whitehaven Street NW., Washington, D.C.;
Regional Director, National Marine Fisheries Service, Southeast Region, 14 Elm Street, Federal Building, Gloucester, Massachusetts 01930; and
Regional Director, National Marine Fisheries Service, Southwest Region, 300 South Ferry Street, Terminal Island, California 90731.

Dated: September 8, 1980.

Richard B. Roe,

Acting Director Office of Marine Mammals and Endangered Species National Marine Fisheries Service.

[FR Doc. 80-28207 Filed 9-11-80; 8:45 am]

BILLING CODE 3510-22-M

North Pacific Fishery Management Council and Scientific and Statistical Committee and Advisory Panel; Amended Meeting Notice

AGENCY: National Marine Fisheries Service, NOAA.

SUMMARY: The date and time for the meeting of the Scientific and Statistical Committee of the North Pacific Fishery Management Council, as published on September 9, 1980, 45 FR 59369, has been changed as follows:

From: Convening Tuesday, September 23, 1980, at 9 a.m., and adjourning at 5 p.m.

To: Convening Monday, September 22, 1980, at 1:30 p.m., and adjourning at 5 p.m.

All other information remains unchanged.

FOR FURTHER INFORMATION CONTACT: North Pacific Fishery Management Council, P.O. Box 3136DT, Anchorage, Alaska 99510, Telephone: (907) 274–4563.

Dated: September 9, 1980.

Robert K. Crowell,

Deputy Executive Director, National Marine Fisheries Service.

[FR Doc. 80-28245 Filed 9-11-80; 8:45 am]

BILLING CODE 3510-22-M

COMMITTEE FOR THE IMPLEMENTATION OF TEXTILE AGREEMENTS

Import Restraint Levels for Certain Cotton and Man-Made Fiber Textile Products Under a New Bilateral Agreement With Sri Lanka, Effective May 1, 1980

September 9, 1980.

AGENCY: Committee for the Implementation of Textile Agreements.

ACTION: Establishing import restraint levels for cotton gloves and mittens in Category 331, women's, girls' and infants' cotton coats in Category 335, woven shirts and blouses of cotton and man-made fibers in Categories 340, 341, 640 and 641, and women's, girls' and infants' cotton trousers in Category 348, produced or manufactured in Sri Lanka and exported to the United States during the twelve-month period which began on May 1, 1980.

(A detailed description of the textile categories in terms of T.S.U.S.A. numbers was published in the Federal Register on February 28, 1980 (45 FR 13172), as amended on April 23, 1980 (45 FR 27463) and August 12, 1980 (45 FR 53506)).

SUMMARY: On July 7, 1980 the Governments of the United States and Sri Lanka exchanged diplomatic notes

establishing a cotton, wool and man-made fiber textile agreement beginning on May 1, 1980 and extending for three years through April 30, 1983. The agreement establishes specific levels of restraint for Categories 331, 335, 340, 341, 348, 640 and 641 during the agreement year which began on May 1, 1980 and extends through April 30, 1981. The agreement also provides a consultation mechanism for categories of textile products which are not subject to specific ceilings and for which levels may be established during the year upon agreement between the two governments. In the letter published below the Chairman of the Committee for the Implementation of Textile Agreements directs the Commissioner of Customs, in accordance with the terms of the bilateral agreement, to prohibit entry into the United States for consumption, or withdrawal from warehouse for consumption, of textile products in the foregoing categories, produced or manufactured in Sri Lanka and exported during the twelve-month period which began on May 1, 1980 and extends through April 30, 1981, in excess of the designated levels of restraint.

EFFECTIVE DATE: September 15, 1980.

FOR FURTHER INFORMATION CONTACT: Ross Arnold, International Trade Specialist, Office of Textiles and Apparel, U.S. Department of Commerce, Washington, D.C. 20230. (202/377-5423).

This letter and the actions taken pursuant to it are not designed to implement all of the provisions of the bilateral agreement, but are designed to assist only in the implementation of certain of its provisions.

Paul T. O'Day,

Chairman, Committee for the Implementation of Textile Agreements.

September 9, 1980

Committee for the Implementation of Textile Agreements

Commissioner of Customs,
Department of the Treasury, Washington, D.C.

Dear Mr. Commissioner: Under the terms of the Arrangement Regarding International Trade in Textiles done at Geneva on December 20, 1973, as extended on December 15, 1977; pursuant to the Bilateral Cotton, Wool and Man-Made Fiber Textile Agreement of July 7, 1980, between the Governments of the United States and Sri Lanka; and in accordance with the provisions of Executive Order 11651 of March 3, 1972, as amended by Executive Order 11951 of January 6, 1977, you are directed to prohibit, effective on September 15, 1980 and for the twelve-month period beginning on May 1, 1980 and extending through April 30, 1981 entry into the United States for consumption and withdrawal from warehouse for consumption of cotton and man-made fiber textile products in Categories 331, 335, 340, 341, 348, 640 and 641 in excess of the following levels of restraint:

Category	12-month levels of restraint [1]
331	700,000 dozen pairs.
335	100,000 dozen.
340/341/640/641	1,150,000 dozen of which not more than 350,000 dozen shall be in Category 340; not more than 360,000 dozen shall be in Category 341; not more than 80,000 dozen shall be in Category 640; and not more than 360,000 dozen shall be in Category 641.
348	200,000 dozen.

[1] The levels of restraint have not been adjusted to reflect any entries after April 30, 1980.

In carrying out this directive, entries of cotton and man-made fiber textile products in the foregoing categories produced or manufactured in Sri Lanka, that have been exported to the United States before May 1, 1980 shall not be subject to this directive.

Cotton and man-made fiber textile products in the foregoing categories that have been released from the custody of the U.S. Customs Service under the provisions of 19 U.S.C. 1448(b) or 1484(a)(1)(A) prior to the effective date of this directive shall not be denied entry under this directive.

The levels set forth above are subject to adjustment in the future according to the provisions of the bilateral agreement of July 7, 1980 between the Governments of the United States and Sri Lanka, which provide, in part, that: (1) specific limits may be exceeded by not more than seven percent of their square yards equivalent total in any agreement period and sublimits of specific ceilings may be exceeded by not more than 10 percent within the overall specific limit; (2) specific limits may be increased for carryover and carryforward up to 11 percent of the applicable category limit or sublimit; and (3) administrative arrangements or adjustments may be made to resolve minor problems arising in the implementation of the agreement. Any appropriate adjustments under the provisions of the bilateral agreement, referred to above, will be made to you by letter.

A detailed description of the textile categories in terms of T.S.U.S.A. numbers was published in the Federal Register on February 28, 1980 (45 FR 13172), as amended on April 23, 1980 (45 FR 27463) and August 12, 1980 (45 FR 53506).

In carrying out the above directions, entry into the United States for consumption shall be constructed to include entry for consumption into the Commonwealth of Puerto Rico.

The actions taken with respect to the Government of Sri Lanka and with respect to imports of cotton and man-made fiber textile products from Sri Lanka have been determined by the Committee for the Implementation of Textile Agreements to involve foreign affairs functions of the United States. Therefore, the directions to the Commissioner of Customs, which are necessary for the implementation of such actions, fall within the foreign affairs exception to the rule-making provisions of 5 U.S.C. 553. This letter will be published in the Federal Register.

Sincerely,

Paul T. O'Day,

Chairman, Committee for the Implementation of Textile Agreements.

[FR Doc. 80-28068 Filed 9-11-80; 8:45 am]

BILLING CODE 3510-25-M

COMMITTEE FOR PURCHASE FROM THE BLIND AND OTHER SEVERELY HANDICAPPED

Procurement List 1980; Proposed Additions

AGENCY: Committee for Purchase from the Blind and Other Severely Handicapped.

ACTION: Proposed additions to procurement list.

SUMMARY: The Committee has received proposals to add to Procurement List 1980 commodities to be produced by workshops for the blind and other severely handicapped.

COMMENTS MUST BE RECEIVED ON OR BEFORE: October 15, 1980.

ADDRESS: Committee for Purchase from the Blind and Other Severely Handicapped, 2009 14th Street North, Suite 610, Arlington, Virginia 22201.

FOR FURTHER INFORMATION CONTACT: C. W. Fletcher, (703) 557-1145.

SUPPLEMENTARY INFORMATION: This notice is published pursuant to 41 U.S.C. 47(a)(2), 85 Stat. 77. Its purpose is to provide interested parties an opportunity to submit comments on the possible impact of the proposed action.

If the Committee approves the proposed additions, all entities of the Federal Government will be required to procure the commodities listed below from workshops for the blind or other severely handicapped.

It is proposed to add the following commodities to Procurement List 1980, November 27, 1980 (44 FR 67925):

Class 8440

Suspenders, Trousers
8440-00-221-0852

Class 8455

Scarfs, Branch of Service, Bib Type
8455-00-NIB-0001
8455-00-NIB-0002
8455-00-NIB-0003
8455-00-NIB-0004
8455-00-NIB-0005
8455-00-NIB-0006
8455-00-NIB-0007
8455-00-NIB-0008
8455-00-NIB-0009
8455-00-NIB-0010
8455-00-NIB-0011
8455-00-NIB-0012
8455-00-NIB-0013
8455-00-NIB-0014
8455-00-NIB-0015

8455-00-NIB-0016
8455-00-NIB-0017
8455-00-916-8398
8455-00-985-7336
8455-00-405-2294
8455-01-078-0745

C. W. Fletcher,
Executive Director.

[FR Doc. 80-28196 Filed 9-11-80; 8:45 am]
BILLING CODE 6820-33-M

Procurement List 1980; Correction of Additions

FR Doc. 80-27160 published on September 5, 1980 (45 FR 58932) is amended to correct the Effective Date to September 5, 1980 for the following:

Class 7530I26Folder, File
7530-00-926-8982
7530-00-926-8984
7530-00-043-1194
Folder Set, File
7530-00-286-6925

SIC 9199

Administrative Services to include typing, operating copiers, mail sorting, clerical and other similar office functions, and motor pool management.

Environmental Protection Agency, 26 Federal Plaza, New York, New York.

C. W. Fletcher,
Executive Director.

[FR Doc. 80-28197 Filed 9-11-80; 8:45 am]
BILLING CODE 6820-33-M

Procurement List 1980; Correction of Deletion

FR Doc. 80-27159 published on September 5, 1980 (45 FR 58932) is amended to correct the Effective Date to September 5, 1980 for the following:

Class 7530
Folder Set, File
7530-00-281-5905

C. W. Fletcher,
Executive Director.

[FR Doc. 80-28198 Filed 9-11-80; 8:45 am]
BILLING CODE 6820-33-M

COMMODITY FUTURES TRADING COMMISSION

Membership of the Commission's Performance Review Board

In accordance with Office of Personnel Management guidance (Attachment 1 to Federal Personnel Manual Bulletin 920-9) under the Civil Service Reform Act of 1978, the Commodity Futures Trading Commission is publishing the following list of its officials who will serve as the members of the Commission's Performance Review Board.

Robert W. Clark, Executive Assistant to the Chairman
James A. Culver, Chief Economist and Director, Division of Economics and Education
John G. Gaine, General Counsel
Thomas J. Loughran, Acting Director, Division of Enforcement
John L. Manley, Director, Division of Trading and Markets
Donald L. Tendick, Executive Director

Issued in Washington, D.C. on September 9, 1980.

Jane K. Strickey,
Secretary of the Commission.

[FR Doc. 80-28235 Filed 9-11-80; 8:45 am]
BILLING CODE 6351-01-M

CONSUMER PRODUCT SAFETY COMMISSION

Toxicological Advisory Board; Meeting

AGENCY: Consumer Product Safety Commission.

ACTION: Notice of meeting: Toxicological Advisory Board.

SUMMARY: This notice announces a meeting of the Toxicological Advisory Board on Tuesday, October 7, 1980 from 8:30 a.m. to 5:00 p.m. and Wednesday, October 8, 1980 from 8:30 a.m. to 2:30 p.m. The meeting, which is open to the public, will be held in Room 456 at 5401 Westbard Avenue, Bethesda, Maryland.

FOR FURTHER INFORMATION CONTACT: Barbara Rosenfeld, Director, Office of Public Participation, Office of the Secretary, Suite 300, 1111 18th Street, NW., Washington, DC 20207 (202) 254-6241.

SUPPLEMENTARY INFORMATION: The Toxicological Advisory Board is a nine-member advisory committee which advises the Commission on precautionary labeling for acutely toxic household substances and on instructions for first aid treatment labeling. In addition, the Board reviews labeling requirements that have been issued under the Federal Hazardous Substances Act and recommends revisions it considers appropriate. The Toxicological Advisory Board was created on November 10, 1978, under the authority of Section 10 of the 1978 CPSC Authorization Act (Pub. L. 95-631).

The meeting will be devoted to the review of labeling advice in the CPSC Labeling Guide for detergents, with particular attention to miscellaneous compounds and metal salts.

On Tuesday the Board will review labeling for miscellaneous compounds such as pyrogallol, thiourea, tung oil, diethylene triamine, trichloroethylene and monoethanolamine, and metal salts such as cadmium silver solders, calcium carbide, aluminum sulfate, ferric ammonium sulfate and ferrous sulfate.

On Wednesday there will be a discussion of labeling concerning emesis and for miscellaneous compounds methenamine and Portland Cement, and related matters.

For a complete list of topics to be discussed or for information on the schedule, please call the number listed above.

The two-day meeting is open to the public; however, space is limited. Persons who wish to make oral or written presentations to the Toxicological Advisory Board should notify the Office of the Secretary (see address above) by Friday, September 26, 1980.

The notification should list the name of the individual who will make the presentation, the person, company, group or industry on whose behalf the presentation will be made, the subject matter, and the appropriate time requested. Time permitting, these presentations and other statements from the audience to members of the Board may be allowed by the presiding officer. Requesters will be informed of the decision before the meeting.

Dated: September 9, 1980.

Sadye E. Dunn,
Secretary, Consumer Product Safety Commission.

[FR Doc. 80-28114 Filed 9-11-80; 8:45 am]
BILLING CODE 6355-01-M

DEPARTMENT OF DEFENSE

Department of the Navy

Naval Discharge Review Board; Hearing Locations

In November 1975, the Naval Discharge Review Board commenced to convene and conduct prescheduled discharge review hearings for a number of days each quarter in locations outside of the Washington, D.C., area. The cities in which these hearings are scheduled are determined in part by the concentration of applicants in a geographic area.

The following Naval Discharge Reveiw Board itinerary for September 1980 through January 1981 has been approved, but remains subject to modification if required:

September 8 through 19, 1980—Bismarck, N.D.; Helena, MT; Portland, OR; Salt Lake City, UT; Denver, CO
September 8 through 19, 1980—Boston, MA
September 29 through October 10, 1980—Chicago, IL; Minneapolis, MN

October 20 through 31, 1980—San Diego, CA
October 27 through November 7, 1980—Dallas, TX; St. Louis, MO
December 1 through 15, 1980—Atlanta, GA; New Orleans, LA; Tampa, FL
January 11 through 23, 1981—San Diego and San Francisco, CA

Any former member of the Navy or Marine Corps who desires a discharge review, either in Washington, D.C., or in a city nearer to his or her residence, should file an application with the Naval Discharge Review Board, using DD Form 293. If a personal appearance is requested, the petitioner should enter on the application which location is preferred. Application forms (DD 293) may be obtained from, and the completed application should be mailed to, the following address: Naval Discharge Review Board, Suite 910, 801 North Randolph Street, Arlington, Virginia 22203.

Notice is hereby given that, since the foregoing itinerary is subject to modification and since, following receipt of a new application, the Naval Discharge Review Board must obtain the applicant's military records before a hearing may be scheduled, the submission of an application to the Naval Discharge Review Board is not tantamount to scheduling a hearing. Applicants and/or their representatives will be motified by mail of the date and place of their hearing when personnal appearance has been requested.

For further information concerning the Naval Discharge Review Board, contact: Captain James C. Price, U.S. Naval Reserve, Executive Secretary, Naval Discharge Review Board, Suite 910, 801 North Randolph Street, Arlington, Virginia 22203, telephone no. (202) 696-4881.

Dated: September 5, 198.0

P. B. Walker,

Captain, JAGC, U.S. Navy Deputy Assistant, Judge Advocate General (Administrative Law).

[FR Doc. 80 28110 Filed 9-11-80; 8:45 am]
BILLING CODE 3810-71-M

DEPARTMENT OF ENERGY

Economic Regulatory Administration

[Docket No. ERA-FC-80-028; (OFC Case No. 61008-9049-01-12]

BASF Wyandotte Corp.; Acceptance of Petition for Exemption

AGENCY: Economic Regulatory Administration, Department of Energy.

ACTION: Notice of acceptance of petition for exemption pursuant to the Powerplant and Industrial Fuel Use Act of 1978.

SUMMARY: On July 14, 1980, BASF Wyandotte Corporation (BWC) filed a petition with the Economic Regulatory Administration (ERA) of the Department of Energy (DOE) for an order exempting a major fuel burning installation (MFBI) from the provisions of the Powerplant and Industrial Fuel Use Act of 1978 (FUA or the Act) (42 U.S.C. 8301 *et seq.*), which prohibit the use of petroleum and natural gas as a primary energy source in certain new MFBI's. A Final Rule setting forth procedures for petitioning for exemptions from the prohibitions of FUA was published in the Federal Register on June 6, 1980 (45 FR 38276 and 45 FR 38302), and became effective August 5, 1980.

The MFBI for which the petitrion was filed is a field-erected boiler to be installed at BWC's Geismar, Louisiana, facility. The proposed unit will have a design heat input rate of 307 million Btu's per hour with a steam generating capacity of 220,000 pounds per hour and will be designed to burn a fuel mixture of approximately 80 percent industrial waste gases and 20 percent natural gas or No. 6 fuel oil. Under section 503.38 of the Final Rule, BWC has requested a permanent exemption to use this fuels mixture as a primary energy source in the proposed unit.

FUA imposes statutory prohibitions against the use of natural gas and petroleum as a primary energy source by new MFBIs which consist of a boiler. ERA's decision in this matter will determine whether BWC will be granted a permanent exemption to use a fuel mixture of industrial waste gases and not more than 25 percent natural gas or No. 6 fuel oil.

ERA has determined that the petition for a permanent fuels mixture exemption is complete in accordance with § 501.3(d) of the Final Rule. A review of the petition is provided in the supplementary information section below.

As provided for in Section 701(c) and (d) of FUA and §§ 501.31 and 501.33 of the Final Rule, interested persons are invited to submit written comments in regard to this matter, and any interested person may submit a written request that ERA convene a public hearing.

DATES: Written comments are due on or before October 27, 1980. A request for public hearing must also be made within this same 45 day period.

ADDRESSES: Fifteen copies of written comments or a request for a public hearing shall be submitted to: Economic Regulatory Administration, Case Control Unit, Box 4629, Room 3214, 2000 M Street NW, Washington, D.C. 20461. Docket Number ERA-FC-80-028, should be printed clearly on the outside of the envelope and the document contained therein.

FOR FURTHER INFORMATION CONTACT:

William L. Webb, Office of Public Information, Economic Regulatory Administration, Department of Energy, 2000 M Street NW, Room B-110, Washington, D.C. 20461, Phone (202) 653-4055.
Constance L. Buckley, Chief, New MFBI Branch, Office of Fuels Conversion, Economic Regulatory Administration, Department of Energy, 2000 M Street NW, Room 3128, Washington, D.C. 20461, Phone (202) 653-4226.
Ellen Russell, Case Manager, Office of Fuels Conversion, Economic Regulatory Administration, Department of Energy, 2000 M Street NW, Room 3207, Washington, D.C. 20461, Phone (202) 653-4236.
Douglas F. Mitchell, Office of the General Counsel, Department of Energy, 1000 Independence Avenue SW, Room 6G-087, Washington, D.C. 20585, Phone (202) 252-2967.

SUPPLEMENTARY INFORMATION: FUA prohibits the use of natural gas and petroleum as a primary energy source in certain new MFBI's unless an exemption for such use has been granted by ERA.

The MFBI for which BWC has requested the permanent fuels mixture exemption is a field-erected boiler to be installed at its Geismar, Louisiana, facility. The unit will have a design heat input rate of 307 million Btu's per hour, a steam generating capacity of 220,000 pounds per hour and will be designed to burn a mixture of industrial waste gases and natural gas or No. 6 fuel oil. Section 503.38 of the Final Rule provides for a permanent exemption from the prohibitions of FUA for certain fuel mixtures containing natural gas or petroleum. To qualify, a petitioner just demonstrate to the satisfaction of ERA that:

(1) It proposes to use a mixture of natural gas or petroleum and an alternate fuel as a primary energy source; and

(2) The amount of petroleum or natural gas proposed for use in the mixture will not exceed the minimum percentage of the total annual Btu heat input of the primary energy sources needed to maintain operational reliability of the installation consistent with maintaining a reasonable level of fuel efficiency.

If the exemption is granted, ERA will not require that the percentage of petroleum or natural gas used in the mixture be less than 25 percent of the

total annual Btu heat input of the primary energy sources of the installation.

ERA, in Final Rule § 503.30(d), adopted a certification procedure for applying for a fuels mixture exemption where petroleum or natural gas will make up less 25 percent of the total annual Btu heat input of the primary energy sources used in the unit. BASF Wyandotte is the first petitioner to make use of this procedure, which requires a duly executed certification stating that the amount of petroleum or natural gas used in the mixture will not exceed 25 percent of the total annual Btu heat input of the primary energy sources of the unit, and that all necessary environmental permits will be obtained prior to commencement of operation of the facility. As standard terms and conditions under this procedure, the petitioner must adhere to the 25 percent limitation on the use of oil or gas, satisfy certain insulation and maintenance requirements, use the lowest available grade of petroleum that is technically feasible and capable of being burned consistent with applicable environmental requirements, and comply with any environmentally related terms and conditions which ERA may impose.

In addressing the eligibility and evidentiary requirements in § 503.38(a) and (d), BWC states that the alternate fuel component of the fuels mixture will consist of two industrial waste gases—waste hydrogen from BWC's chlorine caustics plant at Geismar and waste gas streams from BWC's ethylene oxide plants at Geismar. BWC expects to burn approximately 2012 million cubic feet per year of waste hydrogen, approximately 742 million cubic feet per year of the waste gas from the ethylene oxide production and maximum of either 324 million cubic feet per year of natural gas or 52,100 barrels per year of No. 6 fuel oil.

In preparing the environmental section of it's petition, the company indicated that the facility will be located in, or will affect, a 100-year floodplain. Therefore, ERA will be required to determine whether an environmental assessment or an environmental impact statement is required by Executive Order 11988—Floodplain Management, as implemented DOE regulations pertaining to compliance with floodplain/wetlands environmental review requirements—10 CFR Part 1022.

ERA hereby accepts the filing of the petition for a fuel mixture exemption as adequate for filing. ERA retains the right to request additional information from BWC at any time during the pendency of these proceedings where circumstances or procedural requirements may so require. As set forth in § 501.3(d) of the Final Rule, the acceptance of the petition by ERA does not constitute a determination that BWC is entitled to the exemption requested.

The public file, containing documents on this proceeding and supporting materials, is available for inspection upon request at: ERA, Room B-110, 2000 M Street NW, Washington, D.C., Monday-Friday, 8:00 a.m.-4:30 p.m.

Issued in Washington, D.C. on September 5, 1980

Robert L. Davies,

Assistant Administrator, Office of Fuels Conversion, Economic Regulatory Administration.

[FR Doc. 80-28145 Filed 9-11-80, 8:45 am]

BILLING CODE 6450-01-M

[Docket No. ERA-FC-80-026; OFC Case No. 63007-9183-01-12]

Hoffman-LaRoche, Inc.; Acceptance of Petition for Exemption

AGENCY: Economic Regulatory Administration, Department of Energy.

ACTION: Notice of acceptance of petition for exemption pursuant to the Powerplant and Industrial Fuel Use Act of 1978.

SUMMARY: On July 14, 1980, Hoffman-LaRoche, Incorporated (HLR) filed a petition with the Economic Regulatory Administration (ERA) of the Department of Energy (DOE) for an order granting a permanent cogeneration exemption for a new major fuel burning installation (MFBI) from the prohibitions of the Powerplant and Industrial Fuel Use Act of 1978 (FUA or the Act) 42 U.S.C. 8301 *et. seq.*), which prohibits the use of petroleum and natural gas as a primary energy source in new MFBIs. Eligibility criteria for the cogeneration exemption are contained in the interim rule found at 44 FR 29014 (May 17, 1979).

The MFBI for which the petition is filed is a 28,000 KW diesel engine and a 125 million Btu/hr supplementary oil fired waste heat field erected boiler producing 160,000 pounds of steam per hour (identified as the cogeneration system) to be installed at HLR's Belvidere plant located at Belvidere, New Jersey.

Title II of FUA imposes statutory prohibitions against the use of natural gas and petroleum as a primary energy source by new MFBIs which consist of a boiler. ERA's decision in this matter will determine whether the proposed cogeneration system will be granted a permanent exemption to use No. 6 fuel oil, natural gas, butane, propane, and other petroleum-based fuels pursuant to § 505.27 of the Interim Rule.

ERA has determined that the HLR petition for a cogeneration exemption is complete in accordance with the Interim Rule. Pursuant to § 501.3(c) of the Final Rule containing administrative procedures (45 FR 38287 (June 6, 1980)), ERA notified HLR, within the prescribed 30 day period, that its petition for the permanent exemption was acceptable as filed. ERA retains the right to request additional relevant information from HLR at any time during the pendency of these proceedings where circumstances or procedural requirements may so require. A review of the petition is provided in the supplemental information section below.

As provided for in Section 701(c) of FUA, and Section 501.31 of the Final Rule containing administrative procedures interested persons are invited to submit written comments in regard to this matter.

DATES: Written comments are due on or before October 27, 1980.

ADDRESSES: Fifteen copies of written comments or any request for a public hearing shall be submitted to: Economic Regulatory Administration, Case Control Unit, Box 4629, Room 3214, 2000 M Street, NW., Washington, D.C. 20461. Docket No. ERA-FC-80-026 should be printed on the outside of the envelope and the document contained therein.

FOR FURTHER INFORMATION CONTACT:

Constance L. Buckley, Chief, New MFBI Branch, Office of Fuels Conversion, Economic Regulatory Administration, 2000 M Street, NW., Room 3128, Washington, D.C. 20461, Telephone (202) 653-4226.

Marx Elmer, Office of the General Counsel, Department of Energy, Forrestal Building, Room 6G-087, 1000 Independence Avenue, SW, Washington, D.C. 20585, Telephone (202) 252-2967.

William H. Freeman, New MFBI Branch, Office of Fuels Conversion, Economic Regulatory Administration, 2000 M Street, NW., Room 3126, Washington, D.C. 20461, Telephone (202) 653-4235.

SUPPLEMENTARY INFORMATION: Title II of FUA prohibits the use of natural gas and petroleum as a primary energy source in new MFBIs consisting of a boiler unless an exemption to do so has been granted by ERA. Eligibility criteria for a permanent exemption for cogeneration are found in the Interim Rule at 44 FR 29014 (May 17, 1979).

The new MFBI for which the permanent cogeneration exemption is requested is comprised of a 28,000 KW diesel engine and a 125 million Btu/hr supplementary oil fired waste heat field

erected boiler producing 160,000 lbs/hr steam at 225 psig. The proposed waste heat boiler is capable of using No. 6 oil, natural gas, butane, propane, or other petroleum-based fuels. The proposed cogeneration system will be added to the present plant consisting of five oil fired package boilers producing 602,000 lbs/hr of steam at 650 psig and 200 psig. The proposed cogeneration system will provide all HLR Belvidere plant power requirements (23,000 KW) in addition to 5,000 KW being exported to the utility grid. HLR has provided evidence to show that the utility (Jersey Central Power & Light Co.) has agreed to purchase the excess power. The cogeneration system is expected to run at full load 95% of the time.

To qualify for a cogeneration exemption, a petitioner must show that economic and other benefits of cogeneration are unobtainable unless petroleum or natural gas or both are used by demonstrating to the satisfaction of ERA that either:

(1) The oil or gas to be consumed by the cogeneration facility will be less than that which would otherwise be consumed; or

(2) It would be in the public interest to grant an exemption to the cogeneration facility because of special circumstances such as technical innovation or maintaining industry in urban areas.

HLR has addressed the oil and gas savings requirements contained in § 505.27(a) (1) and (c) for the electric region in which the cogenerator is to be located, Region #5. HLR states that of oil and gas projected to be used by Region #5 utilities in the year 1989, the subject cogenerator would save an estimated 200 x 10^9 Btu's/year or the equivalent of 1.33 million gallons/year of oil. These estimates are formulated upon a projected 8,400 hours of use of the cogenerator.

In addressing the public interest criteria contained in § 505.27(a)(2) of the eligibility requirements, HLR states that this unit will be available as a test bed for coal-derived liquid fuels, and that the project is one of the cost-sharing cogeneration demonstration programs sponsored by the DOE.

In accordance with § 505.27 of the Interim Rule, HLR has addressed the appropriate petition requirements including an engineering description of the cogeneration system, and proposed output and uses thereof, with sufficient detail to ensure that the facility qualifies as a cogeneration facility. In accordance with § 501.62 of the Final Rule containing administrative procedures. HLR has met other petition requirements including submission of information on conservation measures and environmental impact analysis.

ERA hereby accepts the filing of the petition for the permanent cogeneration exemption as adequate for filing. ERA retains the right to request additional relevant information from HLR at any time during the pendency of these proceedings where circumstances or procedural requirements may so require. As set forth in § 501.3(d), the acceptance of the petition by ERA does not constitute a determination that HLR is entitled to the exemption requested.

The public file, containing documents on these proceedings and supporting materials, is available for inspection upon request at: Economic Regulatory Administration, Room B-110, 2000 M Street NW., Washington, D.C., Monday-Friday, 8:00 a.m.-4:30 p.m.

Issued in Washington, D.C., on September 5, 1980.

Robert L. Davies,

Assistant Administrator, Office of Fuels Conversion, Economic Regulatory Administration.

[FR Doc. 80-28144 Filed 9-11-80; 8:45 am]

BILLING CODE 6450-01-M

Warren Holding Co.; Action Taken on Consent Order

AGENCY: Economic Regulatory Administration, Department of Energy.

ACTION: Notice of proposed consent order and of opportunity for comments.

SUMMARY: The Economic Regulatory Administration (ERA) of the Department of Energy (DOE) announces a proposed Consent Order and provides an opportunity for public comment on the proposed Consent Order and on potential claims against the refunds deposited in an escrow account established to the Consent Order.

COMMENTS BY: October 14, 1980.

ADDRESS: Send comments to Edward F. Momorella, District Manager of Enforcement, Northeast District, Economic Regulatory Administration, 10th Floor, 1421 Cherry Street, Philadelphia, Pennsylvania 19102.

FOR FURTHER INFORMATION CONTACT: James Dowd, Audit Director, Office of Enforcement, 150 Causeway Street, Room 700, Boston, Massachusetts, telephone No. (617) 223-3729.

SUPPLEMENTARY INFORMATION: "On August 8, 1980, the Office of Enforcement of the ERA executed a Proposed Consent Order with Warren Holding Company of Dover, Delaware on behalf of its affiliated and/or subsidiary corporations, Mid-Valley Oil Company, Inc./Mid-Valley Petroleum Corporation, Petroleum Marketers, Inc., Drake Petroleum Company, Inc., Kenyon Oil Company, Inc., Warren Petroleum Corporation/Rhode Island Oil Company, Inc., (hereinafter collectively referred to as "Warren"). Under 10 CFR 205.199J(b), a proposed Consent Order which envolves a sum of $500,000 or more in the aggregate, excluding penalties and interest, becomes effective only after the DOE has received comments with respect to the proposed Consent Order.

Although the ERA has signed and tentatively accepted the proposed Consent Order, the ERA may, after consideration of the comments it receives, withdraw its acceptance and, if appropriate, attempt to negotiate an alternative Consent Order."

I. The Consent Order

Warren is a firm engaged in the reselling and retailing of petroleum products and was subject to the Mandatory Petroleum Price and Allocation Regulations at 10 CFR Parts 210, 211 and 212. To resolve certain disputes between the ERA and Warren without resort to expensive and time consuming proceedings, the ERA and Warren entered into a Consent Order. The more important terms of the Consent Order are as follows:

A. During the period November 1, 1973 through April 30, 1974, the DOE contends that Warren recovered in its sales of No. 2 Heating Oil and Motor Gasoline revenues in excess of amounts allowed if selling prices were calculated in accordance with the applicable price rule, 10 CFR 212.93 (as preceded by 6 CFR 150.359). The overcharges alleged by DOE were collected in sales during the following periods:

Company	Product	Period
Mid-Valley Oil Co., Inc	Motor gasoline	Nov. 1 to Dec. 31, 1973; Jan 7 to Mar. 31, 1974.
	No. 2 heating oil	Nov. 21, 1973; Dec. 13 and Dec. 19, 1973.
Kenyon Oil Company, Inc	Motor gasoline	Nov. 16, 1973 and Feb. 28, 1973; Mar. 4 to Apr. 30, 1974.
Petroleum Marketers, Inc	Motor gasoline	Nov. 1, 1973 to Jan. 31, 1974; Mar. 1 to Apr. 30, 1974.
Drake Petroleum Co., Inc	Motor gasoline	Nov. 1, 1973 to Apr. 30, 1974.
Warren Petroleum Corp./Rhode Island Oil Co., Inc.	Motor gasoline	Nov. 1, 1973 and Mar. 31, 1973; Apr. 5 to Apr. 7, 1974.

B. Warren and DOE each believe that its legal contentions concerning the matters resolved by this Consent Order are meritorious and are likely to be sustained if tried before a court. Following examination of the arguments raised by Warren and due to the time and expense which could be involved in the litigation of the issues raised, DOE believes it to be fair, reasonable and in the best interest of the United States to conclude the audit proceeding through a Consent Order. The amount provided for in this Consent Order represents a settlement between DOE and Warren of the audit proceeding. This Consent Order is not, and shall not be construed to be, either a finding of any nature by DOE or an admission of the same by Warren with respect to the pricing of No. 2 heating oil and gasoline. This Consent Order does not constitute an admission by Warren or a finding by DOE that the individual corporations included in this Consent Order are not separate firms for all purposes.

C. Warren agrees to refund as part of this agreement $1,010,000, plus interest earned after August 1, 1980.

D. This Consent Order is a final Order of DOE, and in consideration of DOE's agreement to the terms hereof and in accordance with 10 CFR Section 205.199J(b), Warren hereby expressly waives its rights to appeal or to obtain judicial review of this Order. The provisions of 10 CFR 205.199J are applicable to this Consent Order and are incorporated by reference herein.

II. Disposition of Refunded Overcharges

In this Consent Order, Warren agrees to refund, in full settlement of any civil liability with respect to actions which might be brought by the Office of Enforcement, ERA, arising out of the transactions specified in I. (1), above, the sum of $1,010,000, plus interest earned after August 1, 1980. Refunded overcharges will be in the form of a certified check made payable to the United States Department of Energy and will be delivered to the Assistant Administrator for Enforcement, ERA. These funds will remain in a suitable account pending the determination of their proper disposition.

The DOE intends to distribute the refund amounts in a just and equitable manner in accordance with applicable laws and regulations. Accordingly, distribution of such refunded overcharges requires that only those "persons" (as defined at 10 CFR 205.2) who actually suffered a loss as a result of the transactions described in the Consent Order receive appropriate refunds. Because of the petroleum industry's complex marketing system, it is likely that overcharges have either been passed through as higher prices to subsequent purchasers or offset through devices such as the old Oil Allocation (Entitlements) Program, 10 CFR 211.67. In fact, the adverse effects of the overcharges may have become so diffused that is a practical impossibility to identify specific, adversely affected persons, in which case disposition of the refunds will be made in the general public interest by an appropriate means such as payment ot the Treasury of the United States pursuant to 10 CFR 205.199I(a).

III. Submission of Written Comments

A. *Potential Claimants:* Interested persons who believe that they have a claim to all or a portion of the refund amount should provide written notification of the claim to the ERA at this time is requested primarily for the purpose of identifying valid potential claims to the refund amount. After potential claims are identified, procedures for the making of proof of claims may be established. Failure by a person to provide written notification of a potential claim within the comment period for this Notice may result in the DOE irrevocably disbursing the funds to other claimants or to the general public interest.

B. *Other Comments:* The ERA invites interested persons to comment on the terms, conditions, or procedural aspects of this Consent Order.

You should send your comments or written notification of a claim to the District Manager of Enforcement, Northeast District, Economic Regulatory Administration, 1421 Cherry Street, 10th Floor, Philadelphia, Pennsylvania 19102.

You should identfy you comments or written notification of a claim on the outside of your envelope and on the documents you submit with the designation, "Comments on Warren Holding Company Consent Order." We will consider all comments we receive by 4:30 P.M., local time on (30 days from publication). You should identfy any information or data which, in your opinion, is confidential and submit it in accordance with the procedures in 10 CFR 205.9(f).

Issued in Philadelphia, PA on the 20th day of August 1980.

Edward F. Momorella,

District Manager of Enforcement, Northeast District.

[FR Doc. 80-28146 File 9-11-80; 8:45 am]

BILLING CODE 6450-01-M

[Docket No. ERA-FC-80-023; ERA Case No. 67020-9999-01-23]

Soyland Power Cooperative, Inc.; Exemption Petition From the Powerplant and Industrial Fuel Use Act of 1978

AGENCY: Economic Regulatory Administration, Department of Energy.

ACTION: Notice of acceptance of exemption request.

SUMMARY: On April 4, 1980, Soyland Power Cooperative, Incorporated (Soyland) petitioned the Economic Regulatory Administration (ERA) of the Department of Energy (DOE) for a permanent fuel mixtures exemption from the provisions of the Powerplant and Industrial Fuel Use Act of 1978 (FUA or the Act) (42 U.S.C. 8301 *et seq.*) which prohibit the use of petroleum or natural gas in new powerplants. Criteria for petitioning for a permanent fuel mixtures exemption from the provisions of FUA are published in the implementing regulations at 10 CFR Parts 501.3 and 503.38.

Soyland proposes to install a 220,000 kilowatt compressed air energy storage system which will use a mixture of natural gas/petroleum and compressed air (produced during off-peak hours from electricity generated from alternate fuels). FUA imposes statutory prohibitions against the use of petroleum or natural gas by new powerplants. ERA's decision in this matter will determine whether the proposed powerplant qualifies for the requested exemption.

ERA has accepted this petition pursuant to §§ 501.3 and 501.63 of the regulations. In accordance with the provisions of §§701 (c) and (d) of FUA, and §§501.31 and 501.33 of the regulations, interested persons are invited to submit written comments in regard to this matter, and any interested person may submit a written request that ERA convene a public hearing.

DATES: Written comments are due on or before October 27, 1980. A request for a public hearing must be made by any interested person within this same 45-day period.

ADDRESSES: Fifteen copies of written comments shall be submitted to: Department of Energy, Case Control Unit, Box 4629, Room 2313, 2000 M Street, N.W., Washington, D.C. 20461.

Docket Number ERA-FC-80-023 should be printed clearly on the outside of the envelope and the document contained therein.

FOR FURTHER INFORMATION CONTACT: William L. Webb, Office of Public

Information, Economic Regulatory Administration, Department of Energy, 2000 M Street, N.W., Room B-110, Washington, D.C. 20461, Phone (202) 653-4055.

Louis T. Krezanosky, New Powerplants Branch, Economic Regulatory Administration, Department of Energy, 2000 M Street, N.W., Room 3128, Washington, D.C. 20461, Phone (202) 653-4208.

James Renjilian, Office of General Counsel, 6G-087 Forrestal Bldg., Washington, D.C. 20461, Phone (202) 252-2967.

SUPPLEMENTARY INFORMATION: FUA prohibits the use of natural gas or petroleum in certain new powerplants unless an exemption for such use has been granted. Soyland has filed a petition for a permanent fuels mixture exemption to use natural gas or petroleum as a primary energy source.

Soyland plans to construct a 220,000 kilowatt (220 megawatts or 220 MW) compressed air energy storage system (CAES). In a standard combustion turbine powerplant, the turbine simultaneously powers both a compressor and a generator—the compressor injects combustion air directly to the combustor and to the turbine. The entire assembly operates simultaneously. About one-half of the oil or gas used by the turbine plant goes into power for the compressor; only one quarter of the fuel energy actually appears as electric power output; the rest is lost as exhaust heat. In the combustion turbine designed for a CAES system, the compression work is shifted to the off-peak hours, when such energy is generated by baseloaded plants using more plentiful and less expensive energy sources.

CAES also employs other changes in the standard combustion turbine configuration. A synchronous motor-generator (M-G), is connected by clutches to either the compressor or the turbine, and replaces the standard generator. During charging, which occurs during off-peak periods, electricity from the electric power system powers the M-G as a motor, which in turn drives the compressor. The ambient air is compressed and stored. The compressed air is discharged during peak load periods. During discharging, the compressed air is used to power the turbine, which in turn runs the M-G. The M-G now operates as a generator that supplies electricity to the electric power system. Because the energy ordinarily required to power the compressor is replaced by stored compressed air, two-thirds of the oil or gas used in a standard turbine is saved, being replaced by electricity generated by the electric power system's baseload coal or nuclear powerplants. The estimated energy equation for the CAES system is:

1 KWH (produced)=.72 KWH energy input (from the electric power system during off peak hours); + .28 KWH (4,000 Btu's energy input from the combustion of oil or gas)

Thus a CAES System operates off a mixture of approximately two-thirds electricity and one-third oil or gas.

In support of its exemption petition, Soyland has furnished information required by §§ 502.9 (Alternate supply of electric power), 502.11 (Petroleum and natural gas consumption), 502.12 (Conservation measures), and 502.13 (Environmental impact analysis) of the regulations.

ERA retains the right to request additional relevant information from Soyland at any time during the pendency of these proceedings where circumstances or procedural requirements may require.

The public file, containing all documents relating to these proceedings is available for inspection upon request at: ERA, Room B-110, 2000 M Street, N.W., Washington, D.C. 20461, Monday-Friday, 8 a.m.—4:30 p.m.

Issued in Washington, D.C. on September 8, 1980.

Robert L. Davies,

Assistant Administrator, Office of Fuels Conversion, Economic Regulatory Administration.

[FR Doc. 80-28219 Filed 9-11-80; 8:45 am]

BILLING CODE 6450-01-M

[Docket No. ERA-56516-6081-01, 02]

Stony Brook Phase I Project, Massachusetts Municipal Wholesale Electric Co.; Decision and Order Granting Exemptions From the Prohibitions of the Powerplant and Industrial Fuel Use Act of 1978

The Economic Regulatory Administration (ERA) of the Department of Energy (DOE) hereby issues this Decision and Order granting permanent peakload exemptions from the prohibition against the use of petroleum by new powerplants contained in Section 201 of the Powerplant and Industrial Fuel Use Act of 1978, 42 U.S.C. 8301 *et seq.* (FUA or the Act).

BACKGROUND: On November 27, 1978, the Massachusetts Municipal Wholesale Electric Company (MMWEC) petitioned ERA for a determination, to be made prior to December 15, 1978, (1) whether or not MMWEC's Stony Brook Phase I project powerplants were "new" or "existing" within the meaning of Section 103(a) of FUA and (2) if determined by ERA to be "new", whether, pursuant to SEction 902 of FUA, such powerplants qualified for any exemptions from the prohibitions of Title II of the Act applicable to new facilities. On December 14, 1978, ERA issued a Tentative Decision and Order in which it found MMWEC's powerplants to be "new" and tentatively granted peakload powerplant exemptions for two 85,000 kw combustion turbines pending DOE's compliance with Section 102 of the National Environmental Policy Act, 42 U.S.C. 4321 *et seq.* (NEPA).

ERA issued a notice of acceptance of MMWEC's petition on December 26, 1978, and published such notice, together with a statement of reasons set forth by MMWEC for requesting the exemptions and a summary of ERA's Tentative Decision and Order, in the Federal Register on December 29, 1978 (43 FR 60989). Publication of the notice commenced a public comment period which closed February 21, 1979. Interested parties were afforded an opportunity to request a public hearing. A request for a public hearing submitted by MMWEC was subsequently withdrawn. No other requests for a public hearing were submitted. Comments were received from over 40 interested persons including the governor of Massachusetts, members of Congress, representatives of various municipalities, labor unions, and private citizens.

Under final rules applicable to new facilities published June 6, 1980 (45 FR 38320) implementing certain provisions of FUA, ERA will not impose, in granting a peakload exemption, all of the terms and conditions contained in the December 14, 1978, Tentative Decision and Order to MMWEC. Therefore, condition 4.a. which would have required MMWEC to construct the units with the capability of burning natural gas, alcohol and synthetic distillate oil as their primary energy source and condition 4.b. relating to the possible future use of alcohol or other alternate fuels will not be imposed in this Final Order. Condition 4.c. relating to the annual 1500 hour limitation on use of the units and condition 4.d. relating to annual reporting requirements are being

modified to be consistent with similar conditions provided for in the final rules.

The December 14, 1978 Tentative Decision and Order was issued pending DOE's compliance with NEPA. In connection with the promulgation of the final FUA rules for new facilities, DOE has determined that the granting of permanent peakload exemptions is normally not a major Federal action significantly affecting the quality of the human environment, within the meaning of NEPA. Based upon information provided by MMWEC, ERA has conducted an analysis which has been reviewed by DOE's Office of Environment with consultation from the Office of the General Counsel and DOE has concluded that the granting of these peakload exemptions is not a major federal action within the meaning of NEPA. Accordingly, no environmental impact statement or environmental assessment was required prior to issuance of this order.

On the basis of a review of the entire record of this proceeding, including the public comments, ERA has determined to grant the exemptions. This order grants MMWEC permanent peakload powerplant exemptions to use petroleum in the two combustion turbines which are a part of MMWEC's Stony Brook Phase I project subject to the terms and conditions enumerated below.

DATES: This order will not take effect prior to November 12, 1980.

ADDRESSES: For further information contact:

William L. Webb, Office of Public Information, Economic Regulatory Administration, Department of Energy, 2000 M Street, NW., Room B-110, Washington, DC 20461, Phone (202) 653-4055.

Louis T. Krezanosky, Office of Fuels Conversion, Economic Regulatory Administration, Department of Energy, 2000 M Street, NW., Room 3128, Washington, DC 20461, Phone (202) 653-4208.

Edward L. Lublin, Office of General Counsel, Department of Energy, 1000 Independence Avenue, SW., Room 6G-087, Washington, DC 20585, Phone (202) 252-2967.

SUPPLEMENTARY INFORMATION: The Massachusetts Municipal Wholesale Electric Company (MMWEC) was formed by the Commonwealth of Massachusetts in 1975 to serve as an agent for participating municipal electric utility systems in the development of a municipal power supply program. The Massachusetts Legislature has authorized MMWEC to issue tax exempt revenue bonds and to participate in the New England Power Pool.

MMWEC plans to build five powerplants on 471 acres of land adjacent to the Westover Air Force Base in Ludlow, Massachusetts, to be designated as the Stony Brook Energy Center, to supply the peak and intermediate load power needs of 31 municipal electric departments and systems. The powerplants which constitute MMWEC's Phase I Project are to have a total rated generating capacity of approximately 511 MW and will consist of two oil-fired simple-cycle combustion turbine peaking units and a combined-cycle intermediate unit. These units are scheduled to be operated in 1981. Approximately 4.7 miles of the 345-KV transmission line will be installed to connect the Stony Brook Energy Center to the New England Power Pool transmission system.

On November 27, 1978, pursuant to Section 902(a) of FUA, MMWEC requested the ERA to determined prior to December 15, 1978, (1) whether MMWEC's Phase I Project powerplants were "new" or "existing" within the meaning of Section 103(a) of FUA, and (2) if determined to be "new" whether the powerplants qualified for any exemption under Title II of the Act.

In accordance with MMWEC's request for an expedited determination, ERA issued a Tentative Decision and Order pursuant to Sections 902 and 103 of FUA on December 14, 1978. ERA's action at that time was described as "tentative" to permit full compliance with Section 102 of the National Environmental Policy Act of 1969 (NEPA), 42 U.S.C. 4321 *et seq.* In the Tentative Decision and Order, ERA determine that MMWEC's Phase I Project powerplants were "new" facilities under the criteria set forth in Section 103(a) of FUA as implemented by the Interim Rule governing "transitional facilities" published at 43 FR 54912. The powerplants were, therefore, subject to the prohibitions of Section 201 of FUA. ERA also decided that the evidence presented by MMWEC did not warrant a determination that the intermediate load unit planned for the Phase I Project qualified for any exemption under Title II of FUA. ERA's Tentative Decision and Order denied MMWEC's request for an exemption for this unit without prejudice to the filing of subsequent petitions.

On March 21, 1979, ERA issued a Revised Interim Rule relating to "transitional facilities" substantially changing the regulations previously issued by ERA on November 22, 1978. On April 3, 1979, MMWEC filed a new request for classification under the Revised Interim Rule to have its intermediate load powerplant classified as an "existing" facility under § 515.5 of the Revised Interim Rule on the grounds of a substantial financial penalty. ERA determined that MMWEC's intermediate load powerplant qualified as an existing facility. As a result, Section II. A., of the Tentative Decision and Order was withdrawn. ERA issued its determination regarding the intermediate load unit on June 1, 1979, and published its determinations in the Federal Register on June 7, 1979 (44 FR 32728).

Subject to compliance with certain terms and conditions enumerated in the Tentative Decision and Order, and pursuant to Section 902 of FUA, ERA tentatively granted MMWEC's two Phase I Project simple-cycle peaking units an exemption under the provisions of Section 212(g) from the prohibitions of Section 201 of FUA, based upon a certification by officials of MMWEC that neither of the two units would be operated in excess of 1500 hours annually. (44 FR 32728).

ERA, by this order, grants MMWEC permanent exemptions from the prohibitions of FUA with respect to the use of petroleum in the Stony Brook Phase I combustion turbines, provided each powerplant is operated solely as a peakload powerplant subject to the terms and conditions stated below:

Terms and Conditions

Section 214(a) of the Act gives ERA the authority to include in any order granting an exemption appropriate terms and conditions.

Based upon information submitted by MMWEC and upon the results of ERA's analysis, this order is granted on the following terms and conditions:

A. MMWEC shall not produce more than 127,500,000 Kwh during any 12-month period with either of the Stony Brook Phase I combustion turbines. MMWEC shall provide a certification of peakload hours (those hours of each month in which MMWEC's hourly load is expected to exceed 80 percent of the estimated maximum hourly load) within thirty days from the date of this order.

B. MMWEC shall comply with the reporting requirements set forth in 10 CFR Part 503.41(d).

C. This order shall not take effect earlier than November 12, 1980.

Issued in Washington, D.C. on September 8, 1980.

Robert L. Davies,

Assistant Administrator, Office of Fuels Conversion, Economic Regulatory Administration.

[FR Doc. 80-28220 Filed 9-11-80; 8:45 am]

BILLING CODE 6450-01-M

[ERA Docket No. 80-CERT-023]

System Fuels, Inc.; Application for Certification of the Use of Natural Gas To Displace Fuel Oil

On June 24, 1980, System Fuels, Inc. (SFI), P.O. Box 61532, New Orleans, Louisiana 70161 filed an application pursuant to 10 CFR Part 595 for recertification of an eligible use of natural gas to displace fuel oil at its parent companies: Arkansas-Missouri Power Company, Arkansas Power & Light Company, Louisiana Power & Light Company, Mississippi Power & Light Company, and New Orleans Public Service Inc., all operating electric generating companies of Middle South Utilities, Inc. Subsequently, SFI filed five amendments, generally relating to the eligible seller and transporter of the natural gas. More detailed information is contained in the application and amendments on file with the Economic Regulatory Administration (ERA) and available for public inspection at the ERA, Docket Room 7108, 2000 M Street NW., Washington, D.C. 20461, from 8:30 a.m. to 4:30 p.m., Monday through Friday, except Federal holidays. At the request of the applicant, issuance of this notice of application has been delayed pending the receipt and processing of the amendments, the last of which was received by EPA on September 8, 1980.

SFI seeks recertification of its previous use of natural gas to displace oil authority, granted in ERA Docket No. 79-CERT-028 issued on June 22, 1979 (44 FR 37671, June 28, 1979). However, since SFI's application for recertification was received by ERA two days after its certificate expired and it seeks to add new eligible sellers, ERA is treating this as an application for a new certification.

In its application as amended, SFI states that the volume of natural gas available for use at its various facilities which are located in Missouri, Arkansas, Louisiana, and Mississippi, is an average of approximately 120,000 Mcf per day. This natural gas will be used over the next year to displace approximately 1,000,000 barrels of middle distillate (including No. 2 fuel oil) and 6,000,000 barrels of residual fuel oil (No. 6) having a sulfur content of 1 percent, 1½ percent or 3 percent, depending on the facilities in which the fuel oil is displaced. SFI states it will attempt to use the natural gas to maximize the displacement of No. 2 fuel oil first, then other middle distillates, and finally, residual fuel oils. Most of the middle distillates will be used in units which are only used during peak load periods.

The eligible sellers of the natural gas are the Channel Industries Gas Company, P.O. Box 2511, Houston, Texas 77001, the Louisiana Intrastate Gas Corporation, P.O. Box 1352, Alexandria, Louisiana 71301, the Louisiana Resources Company, P.O. Box 3102, Tulsa, Oklahoma 74101, the Michigan Consolidated Gas Company, One Woodward Avenue, Detroit, Michigan 48226, the Delhi Gas Pipeline Corporation, 2700 Fidelity Union Tower, Dallas, Texas 77001, and the IMC Pipeline Company, 8532 Katy Freeway, Suite 303, Houston, Texas 77024. The gas will be transported by the United Gas Pipe Line Company, P.O. Box 1478, Houston, Texas 77001, the Tennessee Gas Pipeline Company, P.O. Box 2611, Houston, Texas 77001, and the Natural Gas Pipeline Company of America, P.O. Box 283, Houston, Texas 77001, the Northern Natural Gas Company, 6750 W. Loop South, Bellaire, Texas 77401, the Transcontinental Gas Pipeline Corporation, P.O. Box 1396, Houston, Texas 77001, the Michigan-Wisconsin Pipeline Company, 5075 Westheimer, Suite 1100, Galleria Towers West, Houston, Texas 77056, and the Panhandle Eastern Pipeline Company, P.O. Box 1642, Houston, Texas 77001.

In order to provide the public with as much opportunity to participate in this proceeding as is practicable under the circumstances, we are inviting any person wishing to comment concerning this application to submit comments in writing to the Economic Regulary Administration, Room 7108, RG-55, 2000 M Street NW., Washington, D.C. 20461, Attention: Mr. Albert F. Bass, on or before September 22, 1980.

An opportunity to make an oral presentation of data, views, and arguments either against or in support of this application may be requested by any interested person in writing within the ten (10) days comment period. The request should state the person's interest and, if appropriate, why the person is a proper representative of a group or class of persons that has such an interest. The request should include a summary of the proposed oral presentation and a statement as to why an oral presentation is necessary. If ERA determines that an oral presentation is necessary, further notice will be given to SFI and any person filing comments and will be published in the Federal Register.

Issued in Washington, D.C., on September 8, 1980.

Douglas G. Robinson,

Deputy Administrator for Policy, Economic Regulatory Administration.

[FR Doc. 80-28218 Filed 9-11-80; 8:45 am]

BILLING CODE 6450-01-M

Federal Energy Regulatory Commission

[Docket Nos. G-4996, et al.]

Shell Oil Co., et al.; Applications for Certificates, Abandonment of Service and Petitions To Amend Certificates[1]

September 4, 1980.

Take notice that each of the Applicants listed herein has filed an application or petition pursuant to Section 7 of the Natural Gas Act for authorization to sell natural gas in interstate commerce or to abandon service as described herein, all as more fully described in the respective applications and amendments which are on file with the Commission and open to public inspection.

Any person desiring to be heard or to make any protest with reference to said applications should on or before September 26, 1980, file with the Federal Energy Regulatory Commission, Washington, D.C. 20426, petitions to intervene or protests in accordance with the requirements of the Commission's Rules of Practice and Procedure (18 CFR 1.8 or 1.10). All protests filed with the Commission will be considered by it in determining the appropriate action to be taken but will not serve to make the protestants parties to the proceeding. Persons wishing to become parties to a proceeding or to participate as a party in any hearing therein must file petitions to intervene in accordance with the Commission's Rules.

Take further notice that, pursuant to the authority contained in and subject to the jurisdiction conferred upon the Federal Energy Regulatory Commission by Sections 7 and 15 of the Natural Gas Act and the Commission's Rules of Practice and Procedure a hearing will be held without further notice before the Commission on all applications in which no petition to intervene is filed within the time required herein if the Commission on its own review of the

[1] This notice does not provide for consolidation for hearing of the several matters covered herein.

Where a petition for leave to intervene matter believes that a grant of the certificates or the authorization for the proposed abandonment is required by the public convenience and necessity. is timely filed, or where the Commission on its own motion believes that a formal hearing is required, further notice of such hearing will be duly given.

Under the procedure herein provided for, unless otherwise advised, it will be unnecessary for Applicants to appear or to be represented at the hearing.

Kenneth F. Plumb,
Secretary.

Docket No. and date filed	Applicant	Purchaser and location	Price per 1,000 ft.[3]	Pressure base
G-4996, D, July 31, 1980	Shell Oil Company, P.O. Box 2463, Houston, Texas 77001.	Natural Gas Pipeline Company, Clayton Field, Live Oak County, Texas.	(1)	
G-5766, C, July 30, 1980	Conoco Inc., P.O. Box 2197, Houston, Texas 77001.	El Paso Natural Gas Company, Langlie Mattix and Jalmat Fields, Lea County, New Mexico.	(2)	14.73
G-6369, B, July 25, 1980	Kerr-McGee Corporation, P.O. Box 25861, Oklahoma City, 73125.	Phillips Petroleum Company, Guymon-Hugoton Field, Texas County, Oklahoma.	(2)	
G-7064, D, July 23, 1980	Texaco Inc., P.O. Box 430, Bellaire, Texas 77401	Transcontinental Gas Pipe Line, Corporation, Odem Field, San Patricio County, Texas.	Release of lease	
G-10339,[4] Aug. 4, 1980	Texaco Inc., P.O. Box 2100, Denver, Colorado 80201.	Colorado Interstate Gas Company, Table Rock Field, Sweetwater County, Wyoming.	(2)	15.025
G-15700, D, July 28, 1980	Shell Oil Company, One Shell Plaza, P.O. Box 2463, Houston, Texas 77001.	Tennessee Gas Pipeline Company, Eugene Island Block 18 Field, St. Mary, Parish, Offshore Louisiana.	(2)	
G-16141, D, July 29, 1980	Gulf Oil Corporation, P.O. Box 2100, Houston, Texas 77001.	Transwestern Pipeline Company, Puckett Devonian Field, Pecos County, Texas.	(2)	
G-16745, D, July 29, 1980	Gulf Oil Corporation, P.O. Box 2100, Houston, Texas 7700139.	United Gas Pipe Line Company, Ada Field, Bienville Parish, Louisiana.	Leases expired	
G-18977 D, July 30, 1980	Gulf Oil Corporation, P.O. Box 2100, Houston, Texas 77001.	Michigan Wisconsin Pipe Line Company, Laverne Field, Beaver and Harper Counties, Oklahoma.	Leases expired	
CI60-697, C, July 23, 1980	Amoco Production Company, Post Office Box 50879, New Orleans, Louisiana 70150.	Texas Gas Transmission Corporation, Minden Field, Webster Parish Louisiana.	(2)	15.025
CI-73-22, C, July 18, 1980	Amoco Production Company, 1754 Amoco Building, Denver, Colorado 80202.	Northern Natural Gas Company, Bearpaw Field, Hill County, Montana.	(2)	15.025
CI80-453, A, July 29, 1980	Aminoil USA, Inc., 2800 North Loop West, P.O. Box 94193, Houston, Texas 77018.	Michigan Wisconsin Pipe Line Company, Block 13, South Pelto Area, Offshore, Louisiana.	(10)	15.025
CI80-454, B, July 28, 1980	Natural Gas Anadarko, Inc., 3072 East 38th Place, Tulsa, Oklahoma 74105.	Northern Natural Gas Company, Petty No. 1-9 Well Section 9, T2N, R26ECM, Beaver County, Oklahoma.	(11)	
CI80-455, A, July 29, 1980	Amerada Hess Corporation, P.O. Box 2521, Houston, Texas 77001.	Texas Eastern Transmission Corporation, West Cameron Block 522, Offshore Louisiana.	(12)	15.025
CI80-460, A, Aug. 4, 1980	Amoco Production Company, P.O. Box 3092, Houston, Texas 77001.	El Paso Natural Gas Company, Three-Bar Field Andrews County, Texas.	(13)	14.65
CI80-462, A, August 4, 1980	Amerada Hess Corporation, 1200 Milam Street, 6th Floor, Houston, Texas 77002.	Transcontinental Gas Pipe Line Corporation, Live Oak Field, Vermilion Parish, Louisiana.	(13)	15.025
CI80-463, A, August 4, 1980	Warren Petroleum Company, A division of Gulf Oil Corporation, Post Office Box 2100, Houston, Texas 77001.	El Paso Natural Gas Company, Saunders Plant and Saunders Plant North, Boosting Station, Lea County, New Mexico.	(14)	14.65
CI80-465, A, August 5, 1980	Louisiana Land Offshore Exploration Company, 225 Baronne Street, New Orleans, Louisiana 70160.	United Gas Pipe Line Company, Block A-55, High Island Area, Offshore Texas.	(15)	14.65
CI80-466, A, August 5, 1980	Texas Pacific Oil Company, Inc., 1700 One Main Place, Dallas, Texas 75250.	Michigan Wisconsin Pipe Line Company, High Island Area, Block A-571, Offshore, Texas.	(16)	14.65
CI80-468, B, August 1, 1980	J. W. Kinzer, P.O. Box 155, Allen, Kentucky 41601	Kentucky West Virginia Gas, Bull Creek (John M. Lyttle Well), Letcher, Kentucky	(17)	
CI80-469 (G-5374), B, August 4, 1980.	Getty Oil Company, Post Office Box 1404, Houston, Texas.	Northern Natural Gas Company, Eunice Gasoline Plant, Lea County, New Mexico.	(13)	
CI80-470, B, August 7, 1980	Goldking Production Company, 900 First City National Bank Building, Houston, Texas 77002.	Transcontinental Gas Pipe Line Corporation, Lafourche Crossing, Lafourche Parish, La.	Reserves are depleted	
CI80-471, A, August 13, 1980	Cities Service Company, P.O. Box 300, Tulsa, Oklahoma 74102.	Tennessee Gas Pipeline Company, Vermilion Block 119, Offshore Louisiana.	(13)	15.025
CI80-472 (CI66-173), B, August 6, 1980.	Gulf Oil Corporation, P.O. Box 2100, Houston, Texas 77001.	Cities Service Gas Company, South Bishop Field, Ellis County, Oklahoma.	(9)	
CI80-473, B, August 13, 1980	Neuhoff Oil & Gas Corp., 8350 North Central Expressway, Suite 44, Campbell Centre 1, Dallas, Texas 75206.	Southern Natural Gas Company, North Montegut Field, Terrebonne Parish, Louisiana.	Depletion at reservoir	
CI80-474, A, August 15, 1980	Chevron U.S.A. Inc., P.O. Box 7309, San Francisco, California 94120.	Natural Gas Pipeline Company of America, East Cameron Block 38, Offshore Louisiana.	(12)	15.025

[1] The leases surrendered under the aforementioned rate schedule were subject to Unit Block No 72. The unit well went off production February 8, 1979. Numerous attempts to restore production were unsuccessful. Subsequently, the leases expired due to the unit well not restored to commercial production. Further, a geological review has found no prospects remaining on the surrendered leases.

[2] Applicant is filing under Amendatory Agreement dated October 26, 1978.

[3] Applicant assigned its interests in the leases covered by the Certificate to PPCo. The mineral interests in the lands have since been acquired by the United States of America.

[4] Applicant is requesting authorization for a change in the delivery point and delivery pressure of the gas to be sold.

[5] Applicant is filing under Gas Purchase Agreement dated 7/12/78, amended by amendment dated 1/16/80

[6] Acreage released has never been productive. No commercial hydrocarbons found in four exploratory wells drilled between 1963 and 1979.

[7] Leases involved have expired by their own terms. No wells were completed and no delivenes of natural gas were made to Transwestern by Gulf from the leases which have expired.

[8] Applicant is willing to accept an amended certificate in accordance with the Natural Gas Policy Act of 1978.

[9] Applicant is filing under gas sales contract dated August 15, 1969.

[10] Applicant is willing to accept a certificate for the sale proposed herein conditioned upon the Commission's ceiling rates as set forth in Opinion No. 770-A, as amended by Section 104 of the Natural Gas Policy Act.

[11] El Paso Natural Gas Company has asserted a claim of prior dedication of gas production from subject acreage pursuant to a Gas Purchase Agreement dated December 8, 1965, between El Paso, as Buyer, and A.I.K., Ltd. No. 2, as Seller. Northern Natural Gas Company agrees that the gas production from subject acreage is committed to El Paso, and accordingly, will deliver to El Paso a volume of gas equal to the total volume delivered by Applicant to Northern's system from the subject well. Applicant has entered into a Gas Purchase Agreement with El Paso and will initiate deliveries to El Paso's system upon abandonment authorization by the Commission from Northern's system.

[12] Applicant is willing to accept the applicable maximum lawful price as provided by the Natural Gas Policy Act of 1978 for the gas sold under this rate schedule.

[13] Applicant is filing under Exchange Agreement dated June 12, 1980.

[14] Applicant is filing under Gas Purchase Agreements dated February 3, 1954 and March 1, 1972, as amended.

[15] Applicant is willing to accept a certificate conditioned upon a price equal to the maximum lawful price under Section 104 of the NGPA, reserving its right to collect any higher applicable NGPA rate.

[16] Applicant is filing under Gas Purchase Contract dated July 1, 1980.

[17] The well production does not generate sufficient pressure to produce against the line pressure of the purchaser. The purchaser blind plated the well in March of 1960 and has indicated that they do not intend to reduce their pressure in order to accept delivery from this well.

[18] The September 2, 1952 contract with Northern Natural Gas intended to commit surplus gas from the Getty Oil Company operated Eunice Gasoline Plant. Surplus gas has not been available from the Eunice Gasoline Plant for several years.

[19] Applicant is filing under Gas Purchase and Sales Agreement dated July 21, 1980.

[20] Gulf's lease included in the unit covered by the contract expired in December, 1971 after the unit well was plugged and abandoned in August, 1971.

[21] Applicant is willing to accept the applicable rate established by the Natural Gas Policy Act of 1978.

Filing Code: A—Initial service, B—Abandonment, C—Amendment to add acreage, D—Amendment to delete acreage, E—Total succession, F—Partial succession.

[FR Doc. 80-27934 Filed 9-11-80; 8:45 am]

BILLING CODE 6450-85-M

ENVIRONMENTAL PROTECTION AGENCY

[FRL 1603-8]

Agency Comments on Environmental Impact Statements and Other Actions Impacting the Environment

Pursuant to the requirements of the section 102(2)(C) of the National Environmental Policy Act of 1969, and section 309 of the Clean Air Act, as amended, the Environmental Protection Agency (EPA) has reviewed and commented in writing on Federal agency actions impacting the environment contained in the following appendices during the period of March 1, 1980 and March 31, 1980.

Appendix I contains a listing of draft environmental impact statements reviewed and commented upon in writing during this review period. The list includes the Federal agency responsible for the statement, the number and title of the statement, the classification of the nature of EPA's comments as defined in Appendix II, and the EPA source for copies of the comments as set forth in Appendix VI.

Appendix II contains the definitions of the classifications of EPA's comments on the draft environmental impact statements as set forth in Appendix I.

Appendix III contains a listing of final environmental impact statements reviewed and commented upon in writing during this review period. The listing includes the Federal agency responsible for the statement, the number and title of the statement, a summary of the nature of EPA's comments and the EPA source for copies of the comments as set forth in Appendix VI.

Appendix IV contains a listing of final environmental impact statements reviewed but not commented upon by EPA during this review period. The listing includes the Federal agency responsible for the statement, the number and title of the statement, and the EPA source of review as set forth in Appendix VI.

Appendix V contains a listing of proposed Federal agency regulations, legislation proposed by Federal agencies, and any other proposed actions reviewed and commented upon in writing pursuant to section 309(a) of the Clean Air Act, as amended, during the referenced reviewing period. This listing includes the Federal agency responsible for the proposed action, the title of the action, a summary of the nature of EPA's comments, and the source for copies of the comments as set forth in the Appendix VI.

Appendix VI contains a listing of the names and addressed of the sources of EPA reviews and comments listed in Appendices I, III, IV, and V.

Note that this is a 1980 report; the backlog of reports should be eliminated over the next two months.

Copies of the EPA Manual setting forth the policies and procedures for EPA's review of agency actions may be obtained by writing the Public Information Reference Unit, Environmental Protection Agency, Room 2922, Waterside Mall SW, Washington, D.C. 20460, telephone 202/755-2808.

Copies of the draft and final environmental impact statements referenced herein are available from the originating Federal department or agency.

Dated: August 29, 1980.

William N. Hedeman, Jr.,
Director, Office of Environmental Review.

Appendix I.—*Draft Environmental Impact Statements for Which Comments Were Issued Between Mar. 1, and Mar. 31, 1980*

Identifying No.	Title	General nature of comments	Source for copies of comments
	Corps of Engineers		
D-COE-C32012-VI	Crown Bay New Port Facility, Charlotte Amalie, St. Thomas, Virgin Island	3	C
D-COE-C32013-NY	Irondequoit Bay Navigation Improvements, Monroe County, New York	ER2	C
D-COE-D32012-VA	Norfolk Harbor and Channels, Deepening and Disposal Study, Norfolk, Virginia	ER2	D
D-COE-F30011-MI	Shore Damages, Grand Marais Harbor, Alger County, Michigan	LO1	F
D-COE-F35029-OO	Upper Mississippi River Resource Management Plan, Iowa and Minnesota	LO2	F
DS-COE-H61004-IA	Snyder-Winnebago Complex, Missouri River Recreation Lakes, Woodbury, County, Iowa	ER2	H
DR-COE-K35008-CA	San Francisco Bay to Stockton Ship Channel, Avon to Stockton, California	ER2	J
D-COE-K36037-GU	Asan Village Flood Control Study, Guam	LO1	J
D-COE-L36069-WA	Kenmore Navigation Channel Study, Kenmore, King County, Washington	LO2	K
	Department of Agriculture		
D-REA-E07007-KY	D. B. Wilson Station, Units 1 and 2, Associated Transmission Facilities, Nelson County, Kentucky.	LO2	E
D-SCS-A99146-OO	National Soil and Water Conservation Program, 1980, Section 6 of the Soil and Water Resources Conservation Act of 1977 (RCA).	LO2	A
D-SCS-H36039-OO	Indian Creek-Van Buren Watershed, Van Buren County, Iowa and Clark County, Missouri	LO2	H
	Department of Commerce		
D-NOA-B91015-OO	U.S. Atlantic Bluefin Tuna Fishery, Fishery Management Plan	LO1	B
D-NOA-E90002-OO	Coastal Migratory Pelagic Resources, Mackerels, FMP, Gulf of Mexico and South Atlantic Fishery Management Plan.	LO1	E

Appendix I.—*Draft Environmental Impact Statements for Which Comments Were Issued Between Mar 1 and Mar. 31, 1980*—Continued

Identifying No.	Title	General nature of comments	Source for copies of comments
	Department of Interior		
D-BLM-A02153-AK	OCS Oil and Gas Lease Sale No. 46, Western Gulf of Alaska, Kodiak	3	A
D-BLM-L61135-ID	Greant Rift Proposed Wilderness Area, Blaine, Menedoka, Butte and Power Counties, Idaho	LO1	K
DS-NPS-K61024-CA	Yosemite National Park General Management Plan, Tuolumne County, California	LO1	J
D-SFW-E64008-NC	Currituck Outer Banks, National Wildlife Refuge, Currituck County, North Carolina	LO1	E
	Department of Transportation		
DS-FAA-D51010-VA	Metropolitan Washington Airport Policy, Arlington County, Virginia	ER2	D
D-FHW-E40188-NC	U.S. 70, Smithfield Bypass, Johnson County, North Carolina	LO2	E
DS-FHW-F40033-MI	U.S. 27, Lansing to Ithaca, Clinton and Gratiot Counties, Michigan	ER1	F
D-FHW-F40147-IN	IN-109 Improvement, South of Anderson, Madison County, Indiana	ER2	F
D-FHW-H40093-IA	U.S. 20, Dodge Street Improvement, Dubuque, Dubuque County, IOWA (FHWA-IOWA-EIS-80-01-D).	ER2	H
D-FHW-L40089-WA	Port Orchard Bypass, WA-160 to WA-16, Kitsap County, Washington	LO2	K
D-FHW-L40090-WA	Steilacoom-Orchard Traffic Study, Pierce County, Washington (FHWA-WA-EIS-80-01-D)	LO2	K
	Federal Energy Regulatory Commission		
D-FRC-E07008-SC	Cross Generating Station, Santee-Cooper Project No. 199, Berkeley County, South Carolina	LO2	E
	General Services Administration		
D-GSA-D11013-PA	Disposal of Surplus Federal Real Property of the Frankford Arsenal, Philadelphia, Pennsylvania	ER2	D
	Department of Housing and Urban Development		
D-HUD-D89025-PA	Mid Valley Industrial Park (UDAG), Throop, Jessup, and Olyphant, Lackawanna County, Pennsylvania.	ER2	D
D-HUD-E85060-FL	Bluewater Bay Village Unit Development, Niceville, Okaloosa County, Florida	LO2	E

Appendix II—Definitions of Codes for the General Nature of EPA Comments

Environmental Impact of the Action

LO—Lack of Objection

EPA has no objections to the proposed action as described in the draft impact statement; or suggests only minor changes in the proposed action.

ER—Environmental Reservations

EPA has reservations concerning the environmental effects of certain aspects of the proposed action. EPA believes that further study of suggested alternatives or modifications is required and has asked the originating Federal agency to reassess these impacts.

EU—Environmentally Unsatisfactory

EPA believes that the proposed action is unsatisfactory because of its potentially harmful effect on the environment. Furthermore, the Agency believes that the potential safeguards which might be utilized may not adequately protect the environment from hazards arising from this action. The Agency recommends that alternatives to the action be analyzed further (including the possibility of no action at all).

Adequacy of the Impact Statement

Category 1—Adequate

The draft impact statement adequately sets forth the environmental impact of the proposed project or action as well as alternatives reasonably available to the project or action.

Category 2—Insufficient Information

EPA believes that the draft impact statement does not contain sufficient information to assess fully the environmental impact of the proposed project or action. However, from the information submitted, the Agency is able to make a preliminary determination of the impact on the environment. EPA has requested that the originator provide the information that was not included in the draft statement.

Category 3—Inadequate

EPA believes that the draft impact statement does not adequately assess the environmental impact of the proposed project or action, or that the statement inadequately analyzes reasonable available alternatives. The Agency has requested more information and analysis concerning the potential environmental hazards and has asked that substantial revision be made to the impact statement.

Appendix III.—*Final Environmental Impact Statements for Which Comments Were Issued Between Mar. 1 and Mar. 31, 1980*

Identifying No.	Title	General nature of comments	Source for copies of comments
	Corps of Engineers		
FS-COE-A36215-OK	Shidler Lake Project, Salt Creek, Osage County, Oklahoma.	EPA's concerns were adequately addressed in the final supplement	G
F-COE-E35027-NC	Wilmington Harbor, Northeast Cape Fear River, Wilmington, New Hanover County, North Carolina.	EPA's concerns were adequately addressed in the final EIS	E
F-COE-F32044-MI	Mitigation of Shore Damages Attributed to Federal Navigation Structures, Hammon Bay Harbor, Michigan.	EPA's concerns were adequately addressed in the final EIS	F
F-COE-F32059-MI	Inland Route, Confined Disposal Facility, Maintenance and Dredging, Alanson Lock and Weir, Emmett County, Michigan.	EPA's concerns were adequately addressed in the final EIS	F

Appendix III.—*Final Environmental Impact Statements for Which Comments Were Issued Between Mar. 1 and Mar. 31, 1980*—Continued

Identifying No.	Title	General nature of comments	Source for copies of comments
F-COE-F32062-OO	Ohio River Navigation Project, Operation and Maintenance, Illinois, Indiana, Kentucky, Ohio, New York, Pennsylvania, Virginia, and West Virginia.	EPA's concerns were adequately addressed in the final EIS.	F
F-COE-G36075-TX	Flood Control and Major Drainage Improvements, Willacy and Hidago Counties, Texas.	EPA's concerns were adequately addressed in the final EIS.	G
F-COE-J34011-CO	Spinney Mountain Reservoir, Water Supply Project, Pike National Forest, Park County, Colorado.	Generally, EPA's concerns were adequately addressed in the final EIS. EPA offered several comments regarding air quality, water quality, sediment control, and dam safety.	I
	Department of Agriculture		
F-AFS-L65036-ID	North Idaho National Forest, Silvicultural Treatment With Herbicides, Bonner, Boundary, Kootenai, Benewah, Latah, Shoshone, Clearwater, and Idaho Counties, Idaho (USDA-FS-FES-R1-(ADM)).	Generally, EPA's concerns were adequately addressed in the final EIS. EPA recognizes the proposal as generic and programmatic in nature and supports the preparation of a more detailed analysis on project specific proposals.	K
	Department of Defense		
FS-USN-K11009-HI	Kahoolawe Island Training Area, Hawaii	EPA's concerns were adequately addressed in the final EIS.	J
	Department of the Interior		
F-BLM-G03014-OO	CO_2 Project, Wasson Field/Denver Unit, New Mexico and West Texas.	EPA's concerns were adequately addressed in the final EIS.	G
F-BLM-K60010-AZ	Crossman Peak Radar Installation, Mohave County, Arizona.	EPA's concerns were adequately addressed in the final EIS.	J
F-NPS-F61007-MN	Voyageurs National Park, Master Plan, St. Louis and Koochiching Counties, Minnesota.	EPA's concerns were adequately addressed in the final EIS.	F
	Department of Transportation		
F-FHW-B40035-MA	U.S. 20 and MA-85, Marlborough, Middlesex County, Massachusetts (FHWA-MASS-EIS-78-02-F).	EPA is concerned with the lack of adequate response towards EPA's noise comments on the draft EIS. EPA has requested a meeting to resolve the unanswered noise comments and to address the noise analysis.	B
F-FHW-E40057-GA	John C. Calhoun Expressway Extension, Richmond County, Georgia.	EPA's concerns were adequately addressed in the final EIS.	E
F-FHW-L40011-OR	29th Avenue to Alder Street, 30th to Hilyard and Amazon Project, City of Eugene, Lane County, Oregon.	EPA expressed environmental reservations on the project as proposed in the final EIS. EPA cannot make a final determination on the proposal as a result of the lack of analysis presented relating to the noncontainment designation of the city of Eugene.	K
F-FHW-L40063-OR	Klamath Falls, South Side Bypass, U.S. 97 to Washburn Way, Section FAS 959, Klamath County, Oregon (FHWA-OR—EIS-78-4-D).	EPA's concerns were adequately addressed in the final EIS. However, specific information regarding secondary impacts on water supply has been requested from the Federal Highway Administration.	K
	General Services Administration		
F-GSA-K11014-CA	Hamilton Air Force Base, Disposition and Use of Surplus Federal Property, Novato, California.	EPA's concerns were adequately addressed in the final EIS.	J
	Department of Housing and Urban Development		
F-HUD-C38002-NJ	Mount Olive Storm Sewer Project, Treatment Facilities, Budd Lake, New Jersey (CDBG).	EPA has environmental reservations regarding the following outstanding issues for the Budd Lake-Netcong Road storm drainage project: Construction of a siltation basin in maintaining water quality in Budd Lake; and the introduction of septic tank effluents to Budd Lake through porous stormwater pipe. EPA understands these concerns will be addressed in a supplementary document issued by HUD I35C	
F-HUD-E85041-TN	Schubert-Sterchi Subdivision, Knoxville, Knox County, Tennessee.	Generally, EPA's concernss were adequately addressed in the final EIS. However, EPA remains concerned regarding the facility's impact on water and air quality.	E
F-HUD-F85050-OH	Expansion of Lake Barby Area, West Point Subdivision, Prairie Township, Franklin County, Ohio.	EPA's concerns regarding water quality and sewage treatment were adequately addressed in the final EIS. However, EPA concerns regarding railroad noise, natural resources and urban policy have not been satisfactorily addressed. EPA also expressed concern over the 657 acres of prime farmland and requests HUD's consideration of this area in its decisionmaking process.	F
F-HUD-G85130—TX	Village Creek Subdivision, Harris County, West Texas.	EPA's concerns were adequately addressed in the final EIS.	G
F-HUD-G85143-TX	Landing Subdivision, League City, Galveston County, Texas.	EPA's concerns were adequately addressed in the final EIS.	G
F-HUD-L85017-AK	Settlers Bay Village Subdivision, Mortgage Insurance, Wasilla, Alaska.	EPA continues to have environmental reservations on the project as proposed. EPA believes the air quality analysis does not adequately demonstrate consistency with the SIP.	K
	Tennessee Valley Authority		
F-TVA-E60007-TN	Sale of permanent easement for Coal-Loading Terminal, Melton Hill Reservoir, Anderson County, Tennessee.	EPA's concerns were adequately addressed in the final EIS. Further, EPA agrees with TVA's selection of the no-action alternative.	E

Appendix IV.—*Final Environmental Impact Statements Which Were Reviewed and Not Commented on Between Mar. 1 and Mar. 31, 1980*

Identifying No.	Title	Source of review
	Corps of Engineers	
F-COE-L36064-AK	Cordova Small Boat Harbor Expansion, Alaska	K
	Department of Agriculture	
F-AFS-J61022-CO	Encampment Wild and Scenic River Study, Routt National Forest, Jackson County, Colorado	I
F-AFS-L61085-OR	Rogue-Illinois Land Management Plan, Siskiyou National Forest, Curry and Josephine Counties, Oregon (USDA-FS-R6-FES-(ADM) 77-2)	K
F-AFS-L61114-ID	Priest Wild and Scenic River Proposal, Idaho Panhandle National Forest, Coeur d'Alene, Kaniksu and St. Joe, Bonner and Boundary Counties, Idaho (USDA-FS-R1-04-FES-LEG-78-10-ID).	K
F-AFS-L61120-OO	Chetco-Grayback Planning Unit, Siskiyou National Forest, Josephine and Curry Counties, Oregon and Del norte County, California	K
F-AFS-L61129-OR	Alsea Planning Unit, Land Management Plan, Siuslaw National Forest, Benton, Lane, and Lincoln Counties, Oregon (USDA-FS-06-12-79-08).	L
FS-REA-J08010-CO	Wolcott to Malta, 230 kV Transmission Line, Related Terminal Facilities, Yampa Project, Eagle County, Colorado	I
	Department of the Interior	
F-BLM-L64005-ID	Snake River Birds of Prey, National Conservation Area, Ada, Canyon, Elmore, and Owyhee Counties, Idaho	K
F-BLM-L65048-OR	Jackson and Klamath Sustained Yield Units, Timber Management Plan, Jackson County, Oregon	K
	Department of Transportation	
F-FHW-J40046-WY	WY-12/WY-130, Snowy Range Road, Reconstruction, Albany County, Wyoming	I
F-FHW-L40068-OR	McLeod Lane to Oregon Electric Railroad, Chemawa Road, Marion County, Oregon (FHWA-OR-EIS-78-06-F)	K
	Department of Housing and Urban Development	
F-HUD-L85015-WA	Suncrest Farms Northwest Subdivision, Suncrest 7th and 9th Additions, Stevens County, Washington (HUD-R10-EIS-79-4F)	K
F-HUD-L85018-OR	St. Johns Riverfront Development, City of Portland, Oregon (UDAG)	K
	Veterans Administration	
F-VAD-E81019-TN	Spinal Cord Injury Unit, Land Acquisition and Construction, Memphis, Shelby County, Tennessee	E
F-VAD-L80001-WA	Veterans Administration Medical Center, 515-Bed Replacement Hospital, Seattle, King County, Washington	K
F-VAD-L80003-OR	Veterans Administration 600-Bed Replacement, Portland, Oregon	K

Appendix V.—*Regulations, Legislation and Other Federal Agency Actions for Which Comments Were Issued Between Mar. 1 and Mar. 31, 1980*

Identifying No.	Title	General nature of comments	Source for copies of comments
		Corps of Engineers	
A-COE-D35023-VA	Assessment, Dredge and Fill Operations, Tylers Beach, Isle of Wight County, Virginia.	EPA has recommended that the feasibility of overboard disposal be investigated. The project entails the disposal of kepone contaminated spoil that will be generated by maintenance dredging of the harbor and 6-foot entrance channel.	D
A-COE-K35017-CA	Assessment, Maintenance Dredging, Bodega Bay Federal Channel, Sonoma County, California.	EPA has no comments to offer at this time	J
A-COE-K36039-AZ	Assessment, Study of Flood Damage Reduction for Allenville, Arizona.	EPA has no comments to offer at this time	J
		Department of Energy	
R-DOE-A09079-OO	10 CFR Part 436, Federal Energy Management and Planning Programs; Guidelines for Energy Management in General Operations of the Federal Government, Notice of Proposed Rulemaking and Public Hearing (45 FR 7498).	EPA supports DOE's development of the energy management plan as a means to facilitate Federal energy conservation and to reduce U.S. dependence on foreign oil. EPA notes that there may be potential conflicts between energy conservation and public health. (Reducing ventilation can increase the concentration of pollutants in the air indoors.) EPA offers to assist in the review described under proposed section 436.77 *Review of Plan*. DOE, at that time, could additionally use the review as a "scoping" mechanism and solicit EPA's views on the "nature and extent of additional environmental reviews" required by NEPA as mentioned in section VIII of the proposed rulemaking.	A
		Department of the Interior	
A-HCR-D61011-OO	Regional Report on the National Trails System Study.	EPA suggested added emphasis be placed on the protection of natural resources from which a trail may gain much of its value.	D
A-NPS-K61043-OO	Desert National Scenic Trail Feasibility Report and Environmental Assessment, California, Arizona, Nevada, Washington, Oregon, and Idaho.	EPA has no comments to offer at this time	J
		Department of Transportation	
R-CGD-A20021-OO	33 CFR Part 158, Ocean Dumping Surveillance System, Action, Proposed Rule (CGD 77-029), (44 FR 72188).	EPA basically concurs in the proposed OOSS rules with minor comments on the purpose and operation of waivers, mounting of sensing devices, and inspection.	A
R-CGD-A52150-OO	33 CFR Part 164, Electronic Relative Motion Analyzer, Action, Proposed Rule (CGD 79-148), (45 FR 11790).	EPA is strongly in favor of requiring vessels carrying liquids in bulk to be equipped with electronic relative motion analyzers. EPA suggested some raising of requirements.	A
A-FHW-D40088-PA	Assessment, Montage Access Road, Air Quality, Work Program, Lackawanna County, Pennsylvania.	EPA has no objections to the project based on the air quality analysis, and believes that computer modeling will be unnecessary due to the low nomograph results.	D
A-FHW-D40089-OO	Manual, Highway and Wetlands, Compensating Wetland Losses.	EPA offered several comments on the manual. Additionally, EPA suggested the usefulness of the document be clearly stated as limited solely to salt marsh communities.	D

Appendix V.—*Regulations, Legislation and Other Federal Agency Actions for Which Comments Were Issued Between Mar. 1 and Mar. 31, 1980*—Continued

Identifying No.	Title	General nature of comments	Source for copies of comments
A-FHW-D40090-MD	Air Quality Analysis I-270/MD-189 Interchange, Montgomery County, Maryland.	EPA has no objections to the proposed project from the air quality standpoint	D
A-FHW-D40091-MD	MD-182, From MD-97 to Argyle Club Road, Air Quality Analysis, Montgomery County, Maryland.	EPA has no objections to the proposed alternatives based on the air quality impacts as proposed..	D
	Delaware River Basin Commission		
A-DRB-D20003-PA	Assessment, North Branch Water Treatment Plant, Control, Bucks and Montgomery Counties, Pennsylvania.	EPA believes a current and comprehensive EIS is needed to properly evaluate the environmental impacts of the proposed plant and related facilities. In this regard, EPA offered several suggestions and comments.	D
	Federal Energy Regulatory Commission		
A-FRC-K05008-CA	Assessment, South Fork American River Development, Upper Mountain Project, Application for License, FERC Project No. 2761, California.	EPA offered several comments relating to water quality and specifically the impacts of reduced flows.	J
	Department of Housing and Urban Development		
A-HUD-K85028-AZ	Scoping, Arrowhead Ranch Subdivision, City of Glendale, Arizona.	EPA offered several comments relating to air and water quality	J
	Nuclear Regulatory Commission		
R-NRC-A22079-OO	10 CFR Parts 2, 19, 20, 21, 30, 40, 51, 60, and 70; Disposal of High-Level Radioactive Wastes Geologic Repositories; Proposed Licensing.	While EPA agrees the proposed rules offers a logical, systematic approach to licensing a high level waste (HLW) repository, some concerns were expressed and suggestions made on site acceptability criteria and terminology inconsistencies. EPA also suggested that the rule require licensees to meet EPA environmental standards for HLW disposal as they become effective.	A

Appendix VI—Source for Copies of EPA Comments

A. Public Information Reference Unit (PM-213), Environmental Protection Agency, Room 2922, Waterside Mall, SW, Washington, D.C. 20460.

B. Director of Public Affairs, Region 1, Environmental Protection Agency, John F. Kennedy Federal Building, Boston, Massachusetts 02203.

C. Director of Public Affairs, Region 2, Environmental Protection Agency, 26 Federal Plaza, New York, New York 10007.

D. Director of Public Affairs, Region 3, Environmental Protection Agency, Curtis Building, 6th and Walnut Streets, Philadelphia, Pennsylvania 19106.

E. Director of Public Affairs, Region 4, Environmental Protection Agency, 345 Courtland Street, NE, Atlanta, GA 30308.

F. Director of Public Affairs, Region 5, Environmental Protection Agency, 230 South Dearborn Street, Chicago, Illinois 60604.

G. Director of Public Affairs, Region 6, Environmental Protection Agency, 1201 Elm Street, Dallas, Texas 75270.

H. Director of Public Affairs, Region 7, Environmental Protection Agency, 1735 Baltimore Street, Kansas City, Missouri 64108.

I. Director of Public Affairs, Region 8, Environmental Protection Agency, 1860 Lincoln Street, Denver, Colorado 80203.

J. Office of External Affairs, Region 9, Environmental Protection Agency, 213, Fremont Street, San Francisco, California 94108.

K. Director of Public Affairs, Region 10, Environmental Protection Agency, 1200 Sixth Avenue, Seattle, Washington 98101.

[FR Doc. 80-28194 Filed 9-11-80; 8:45 am]
BILLING CODE 6560-01-M

[FRL 1604-4; OPP-180485]

New York State Department of Environmental Conservation; Issuance of Specific Exemption for Use of Bayleton on Grapes

AGENCY: Environmental Protection Agency (EPA).

ACTION: Notice.

SUMMARY: EPA has granted a specific exemption to the New York State Department of Environmental Conservation (hereafter referred to as the "Applicant") for the use of Bayleton 50 WP to control powdery mildew on 500 acres of grapes in New York. The specific exemption is issued under the Federal Insecticide, Fungicide, and Rotenticide Act.

DATE: The specific exemption expires on August 31, 1980.

FOR FURTHER INFORMATION CONTACT: Jack E. Housenger, Registration Division (TS-767), Office of Pesticide Programs, Rm. E-107, Environmental Protection Agency, 401 M St., SW, Washington, D.C. 20460. (202-426-0223).

SUPPLEMENTARY INFORMATION: According to the Applicant, powdery mildew, caused by the fungus *Uncinula necator*, is one of the major diseases of grapes in New York State. Leaves, shoots, cluster stems, and the fruit of grapes can be infected by this disease resulting in reduced vigor and yield. Losses for this year's crop are expected to be minor when compared to losses anticipated for future crops. If powdery mildew is left uncontrolled, it predisposes the grape vines to winter injury. Depending on the severity of damage, which is dependent on the intensity of the disease and severity of the winter, yields may be reduced for one or two years or the entire vineyard could be lost.

A number of registered alternatives are currently available to control powdery mildew on grapes including folpet, sulfur, copper, dinocap, and benomyl. Folpet is described by the Applicant as being only partially effective. The Applicant reports that many of the cultivars of grapes grown in New York are very sensitive to sulfur and thus, it cannot be used. The Applicant also states that the majority of the cultivars are also sensitive to copper and dinocap, particularly when these chemicals are applied early in the growning season or during warm

periods. Benomyl has provided effective control of powdery mildew. However, the Applicant reports that in 1978 the first case of benomyl resistance was detected in western New York. The Applicant states that the use of benomyl for control of powdery mildew will continue on the acreage in New York which did not exhibit benomyl-resistant spores in 1979. The acreage to be treated amounts to less than 1.2 percent of the 41,000 acres of grapes in New York.

The Applicant claims that the proposed treatment with Bayleton will stop the spread of benomyl-resistant spores carried by the wind to a much larger acreage not yet experiencing this problem. The Applicant anticipates losses of $324,000 to $405,000 with no control program. Losses using folpet, the most effective registered alternative for control of benomyl-resisitant powdery mildew, are expected to be about $135,000. No losses are anticipated with the use of Bayleton.

The Applicant proposed to use Bayleton 50 WP, an unregistered product, in three applications. Treatments will be made using ground equipment at a rate of 3 ounces of formulation in 20 to 200 gallons of water per acre.

EPA has determined that residues of the active ingredient (a.i.), 1-(4-chlorophenoxy)-3,3-dimethyl-1-(1*H*-1,2,4-triazol-1-yl)-2-butanone), are not expected to exceed 1 part per million (ppm) in or on grapes. This level has been judged adequate to protect the public health. A 14-day pre-harvest interval has been imposed. No unreasonable adverse effects on the environment are anticipated from the proposed use.

After reviewing the application and other available information, EPA has determined that the criteria for an exemption have been met. Accordingly, the Applicant has been granted a specific exemption to use the pesticide named above until August 31, 1980, to the extent and in the manner set forth in the application. The specific exemption is also subject to the following conditions:

1. Bayleton 50% WP, manufactured by the Mobay Chemical Corp., may be used;

2. A maximum of 3 applications may be made at a rate of 3 ounces of formualtion per acre. The first application may be applied as a postbloom spray, the second two weeks later, and the third three weeks after the second;

3. No application will be made within 14 days of harvest;

4. Treatments will be made using 20 to 200 gallons of water per acre by ground equipment;

5. All applications will be made by, or under the direct supervision of, State-certified applicators;

6. A maximum of 500 acres of grapes may be treated. Only that acreage in which *Uncinula necator*, the causative agent of powdery mildew, exhibited benomyl resistance during the 1979 growing season, may be treated;

7. A maximum of 282 pounds of Bayleton may be used;

8. Grape pomace shall not be used as food or feed. It may be spread on the soil between the rows in vineyards or spread on fallow land;

9. Precautions shall be taken to avoid spray drift to non-target areas;

10. The following precautions must be taken when applying Bayleton. It must not be applied directly to lakes, streams, ponds or public water. Drift reduction precautions must be observed. Water must not be contaminated by the cleaning of equipment or disposal of wastes or excess pesticides. The product must be applied only as specified on the label. Pesticide, spray mixture or rinsate that cannot be used or chemically reprocessed should be diposed of in a landfill approved for pesticides or buried in a safe place away from water supplies. Containers must be disposed of in an incinerator or landfill approved for pesticide containers, or may be buried in a safe place;

11. All unopened and unused Bayleton containers shall be returned to the manufacturer at the end of the 1980 growing season;

12. Residue levels of Bayleton (1-(4-chlorophenoxy)-3,3-dimethly-1-(1*H*-1,2,4,-triazol-1-yl)-2-butanone) and its metabolite (beta-(4-chlorophenoxy)-alpha-(1,1-dimethylethyl)-1*H*-1,2,4,-triazole-ethanol) resulting from the above application are not expected to exceed 1 ppm in or on grapes. Grapes with residues not exceeding this level may enter interstate commerce. The Food and Drug Administration, U.S. Department of Health and Human Services, has been advised of this action;

13. The Applicant is responsible for ensuring that all of the provisions of this specific exemption are met and must submit a final report summarizing the results of this program by January 31, 1981; and

14. The EPA shall be immediately informed of any adverse effects resulting from the use of Bayleton in connection with this exemption.

(Sec. 18, as amended (92 Stat. 819; 7 U.S.C. 136))

Dated: September 4, 1980.

Edwin L. Johnson,

Deputy Assistant Administrator for Pesticide Programs.

[FR Doc. 80-28200 Filed 9-11-80; 8:45 am]

BILLING CODE 6560-01-M

[FRL 1604-1; OPP-180486]

Texas Department of Agriculture; Receipt of Application for Specific Exemption for Chlordane; solicitation of Public Comment

AGENCY: Environmental Protection Agency (EPA).

ACTION: Notice.

SUMMARY: EPA has received an application from the Texas Department of Agriculture (hereafter referred to as the "Applicant") for use of chlordane on the back slopes of six flood control structures on the Kickapoo Creek Watershed in Coke County, Texas for control of desert termites. Registration of chlordane has been cancelled. EPA is soliciting public comment before making the decision whether of not to grant the specific exemption.

DATE: The comment period classes on September 29, 1980.

ADDRESS: Written comments to: Document Control Officer (TS-793), Office of Pesticides and Toxic Substances, Environmental Protection Agency, Rm. E-447, 401 M St., SW., Washington, D.C. 20460

FOR FURTHER INFORMATION CONTRACT: Libby Welch, Registration Division (TS-767), Office of Pesticide Programs, Environmental Protection Agency, Rm. E-124, 401 M St., SW., Washington, D.C. 20460, (202-426-0223).

SUPPLEMENTARY INFORMATION: The Applicant reports that the U.S. Department of Agriculture, Soil Conservation Service, has constructed flood control structures which are currently under management supervision of local soil conservation districts. Traditionally, structural stabilization is obtained by establishment of native or adapted, introduced grass species to prevent erosion of these earthen structures. Heavy infestations of desert termites have denuded six of these structures on about 40 acres in the Kickapoo Creek Watershed, promoting soil erosion, which results in weakened structures and expensive repair efforts. The Applicant states that the only mechanical alternative is to apply riprap, an expensive effort that would cost in excess of $3 million. Rejuvenation of the denuded areas would cost about $700.00 per acre and

would require reinstallation approximately every third year because of termite activity. According to the Applicant, there are currently no registered pesticides for control of desert termites.

The Applicant proposes to use a total of 120 pounds of chlordane at a rate of 3 pounds active ingredient per acre on approximately 40 acreas. All spray operations would be conducted under the direct supervision of professional Soil Conservation Service employees who are State-certified noncommercial applicators. The Applicant reports that all the structures are fenced and no grazing is allowed. Chlordane was chosen because of its residual activity. Treatment would begin as soon as possible and would end in August 1981.

On March 6, 1978, the Administrator of EPA cancelled registration of chlordane. Notice of this cancellation appeared in the **Federal Register** of March 24, 1978 (43 FR 12372). Under Subpart D, 40 CFR 164.131, the Administrator must hold hearings before permitting the use of a cancelled pesticide unless he determines to waive hearings as provided for in 40 CFR 164.133.

This notice does not constitute a decision by EPA on the application itself. It has been determined that this application raises questions of such importance that public notice and opportunity for public comment should be given. Accordingly, interested persons may submit written views on this subject to the Document Control Officer at the address given above. Three copies of the comments should be submitted to facilitate the work of the agency and others interested in inspecting the comments. The comments must be received on or before September 29, 1980 and should bear the identifying notation OPP-180486. All written comments filed in reference to this notice will be available for public inspection in the office of the Document Control Officer from 8 a.m. to 4 p.m., Monday through Friday, excluding holidays.

In addition, the application is on file in the Registration Division, Office of Pesticide Programs, Rm. E-124, at the Environmental Protection Agency Headquarters address noted above. Interested persons may review this application from 8 a.m. to 4 p.m. daily.

(Sec. 18, as amended 92 Stat. 819; (7 U.S.C. 136))

Dated: September 4, 1980.

Edwin L. Johnson,

Deputy Assistant Administrator for Pesticide Programs.

[FR Doc. 80-28195 Filed 9-11-80; 8:45 am]

BILLING CODE 6560-01-M

[FRL 1604-3; OOP-180478]

U.S. Department of the Interior; Issuance of Specific Exemption To Use Sodium Cyanide in the M-44 Device to Eradicate Arctic Foxes on Agattu Island in the Aleutians

AGENCY: Environmental Protection Agency (EPA).

ACTION: Notice.

SUMMARY: EPA has granted a specific exemption to the Fish an Wildlife Service, U.S. Department of the Interior (hereafter referred to as the "Applicant") to use approximately 88.78 grams of sodium cyanide in the M-44 device to eradicate the Arctic Fox (*Alopex lagopus*) on Agattu Island in order to protect an endangered species, the Aleutian Canada Goose (*Branta canadensis leucopareia*). The specific exemption is issued under the Federal Insecticide, Fungicide, and Rodenticide Act.

DATE: The specific exemption expires on May 30, 1981.

FOR FURTHER INFORMATION CONTACT: Jack E. Housenger, Registration Division (TS-767), Office of Pesticide Programs, Environmental Protection Agency, Rm: E-107, 401 M Street, SW., Washington, D.C. 20460, (202-426-0223).

SUPPLEMENTARY INFORMATION: According to the Applicant, a remnant breeding population of Aleutian Canada Geese was confirmed on Buldir Island in the Aleutians in 1962. Today this tiny insland supports the only known population, estimated at about 1,000 birds. The population decline in Aleutian Canada Geese and their breeding range is largely attributed to predation by introduced fox. The Applicant stated that the practice of introducing fox, not native to the islands, was initiated for private fur farming. This practice was discontinued in the late 1930's and all permits were revoked. The past control program of trapping and shooting has proven ineffective. The Applicant requested use of the M-44 device for control of the fox population so that a recovery program on Agattu Island for the endangered Aleutian Canada Goose may be successfully completed.

The Applicant proposed that the M-44, a spring-loaded device, containing sodium cyanide be used. A maximum of 100 sodium cyanide capsules containing a total of 88.78 grams active ingredient will be exposed on Agattu Island for one year. The M-44 devices will be placed only by authorized personnel on Agattu Island, National Wildlife Refuge, Alaska. All unused capsules of sodium cyanide will be recovered.

It is anticipated that other elements of the Aleutian avian fauna will flourish in the long run as a result of the eradication program. Overall, the hazards to non-target species through this use of the M-44 appear to be negligible.

It should be noted that, in 1972, the President issued an Executive Order which banned the use of chemical toxicants on Federal lands, *except* in emergency conditions. One of these conditions was the use of chemical toxicants for the preservation of one or more wildlife species threatened with extinction or likely within the foreseeable future to become so threatened. The Aleutian Canada Goose falls within this provision. Further, in 1975, the EPA issued a registration to the Fish and Wildlife Service for the use of sodium cyanide-loaded M-44 devices to control coyote, fox, and feral dogs which prey upon livestock; the EPA has determined that the sodium cyanide/M-44 device will also be effective in removing the Arctic Fox from Agattu Island. If the introduced fox cannot be removed, a successful breeding colony of the Aleutian Canada Goose may not be achieved and this species will continue to be in jeopardy. As previously mentioned, other methods such as trapping and shooting have not been successful in eradicating the Arctic Fox.

Since Agattu Island is uninhabited by man, there should be no danger to humans as a result of this use of the sodium cyanide-loaded M-44 devices.

After reviewing the application and other available information, EPA has determined that the criteria for an exemption have been met. Accordingly, the Applicant has been granted a specific exemption to use the pesticide noted above until May 30, 1981, to the extent and in the manner set forth in the application. The specific exemption is also subject to the following conditions:

1. A maximum of 100 sodium cyanide capsules, approximately 88.78 grams of sodium cyanide, may be used;

2. The sodium cyanide and M-44 devices may be exposed for a one-year period beginning on May 30, 1980, until May 30, 1981. The devices should be periodically checked until August 10, 1980, and then left until pickup on May 30, 1981;

3. Only Fish and Wildlife Service personnel trained in application techniques shall place the sodium cyanide devices on Agattu Island, Aleutian Islands National Wildlife Refuge, Alaska;

4. All unused sodium cyanide capsules shall be recovered at the end of the program;

5. All precautions shall be taken to avoid or minimize hazards to non-target species that may result from the use of this program;

6. The EPA shall be immediately informed of any adverse effects resulting from use of sodium cyanide under this specific exemption; and

7. The Applicant is responsible for ensuring that all provisions of the specific exemption are met and must submit a report summarizing the results of this program by August 31, 1981.

(Sec. 18, as amended 92 Stat. 819; (7 U.S.C. 136))

Dated: September 4, 1980

Edwin L. Johnson,

Deputy Assistant Administrator for Pesticide Programs.

[FR Doc. 80-28199 Filed 9-11-80; 8:45 am]
BILLING CODE 6560-01-M

[OPP 190000; FRL 1604-5]

Disposal of Certain Pesticides Containing Silvex

AGENCY: Environmental Protection Agency (EPA).

ACTION: Notice.

SUMMARY: This notice describes EPA's plans for disposal of certain pesticide products containing silvex. The registrations of these products were suspended and cancelled pursuant to section 6(c) of the Federal Insecticide, Fungicide, and Rodenticide Act (FIFRA), and the owners oif the products have requested EPA to accept them for safe disposal in accordance with section 19(a) of the FIFRA.

FOR FURTHER INFORMATION CONTACT: Disposal Information: James H. Scarborough, Chief, Residuals Management Branch, Air and Hazardous Materials Division, Environmental Protectin Agency, Region IV, 345 Courtland St. NE, Atlanta, Georgia 30365 (404-881-3016).

BACKGROUND INFORMATION: Ralph J. Colleli Jr. (TS-766), Office of Pesticide Programs, Office of Pesticides and Toxic Substances, U.S. Environmental Protection Agency, 401 M St. SW., Washington, D.C. 20460 (202-755-8030).

M-A12093 0022(01)(11-SEP-80-16:01:58)

SUPPLEMENTARY INFORMATION:

I. Background

EPA has the responsibility to regulate pesticide products under the Federal Insecticide, Fungicide, and Rodenticide Act, as amended [FIFRA]. As part of this responsibility, EPA conducts a pesticide product registration program. The registration process includes a determination by the Agency that the sale and use of pesticide products will not cause unreasonable adverse effects on man or the environment. The Agency also has the complementary authority to cancel or, in the event of an imminent hazard, to suspend the registration of any pesticide product which it finds may cause unreasonable adverse effects.

On February 28, 1979, the Administrator of EPA issued an emergency order immediately suspending registrations for certain uses of pesticides containing 2,4,5-T (2,4,5-trichlorophenoxyacetic acid) and silvex (2-(2,4,5-trichlorophenoxy) propionic acid) under the authority of section 6(c)(3) of FIFRA in the Federal Register of March 15, 1979 (44 FR 15897 et seq.). At the same time the Administrator issued a notice of intent to cancel these registrations under FIFRA section 6(c)(1).

The Administrator took these actions because he found that the continued sale or use of the affected products posed an imminent hazard to human health. The Administrator's action was based in part on experimental and epidemiological evidence that 2,4,5-T, silvex, and an unavoidable dioxin contaminant of these pesticides—2,3,7 8-tetrachlorodibenzo-p-dioxin (TCDD)—may cause fetotoxic effects in humans.

Pursuant to section 6 of FIFRA, all affected 2,4,5-T and silvex registrants were given an opportunity for a hearing to contest the suspension order and the notice of intent to cancel. Suspension hearings were initiated but were discontinued when the active parties withdrew from the proceedings. Cancellation hearings began on March 14, 1980, and are still proceeding. Most registrants of the suspended 2,4,5-T and silvex products are parties to the cancellation hearings.

However, subsequent to the issuance of the suspension order and notice of intent to cancel, nineteen registrants of home and garden use products containing silvex withdrew their requests for cancellation hearings. This resulted in permanent cancellation of these registrations under section 6 of FIFRA.

The nineteen registrants who withdrew their hearing requests also signed agreements with EPA concerning, among other things, the disposal of the cancelled products under section 19 of FIFRA, which requires EPA to accept for safe disposal any pesticide cancelled under section 6(c), if requested by the owner of the pesticide. Under these agreements, the nineteen registrants agreed to recall all of their affected products from the channels of trade down to the retail level, and to arrange for interim storage of the recalled products, pending transfer to disposal facilities designated by EPA.

Pursuant to these agreements, 15-18,000 tons of dry, fertilizer-based products containing silvex, and about one million gallons of liquid pesticides containing silvex, have been collected by the registrants and are now in storage pending final disposal. Since dry silvex pesticides and liquid silvex pesticides have many different physical and chemical characteristics, the Agency did not consider it practical to dispose of the liquid products in the same manner as the dry products. Alternatives for the disposal of the liquid products are now being separately considered and notice of EPA's plans for such products will be published at a later date.

The dry end-use products which this notice concerns contain 0.5%-1.5% silvex (pesticide active ingredient). A very small fraction of that active ingredient—on the order of 20 parts per billion (ppb)—is the contaminant TCDD. In general, the bulk of these dry products is finely ground vermiculite or corn cob grits used as a carrier for the fertilizer.

In planning for the disposal of the dry silvex-containing products, EPA has decided to treat them for disposal purposes, as hazardous wastes, although all of the products will not necessarily meet the criteria for hazardous waste classification described in rules recently published by EPA under the Resource Conservation and Recovery Act [RCRA] [40 CFR Parts 261-265]. Those rules, which generally do not take effect until November 19, 1980, will regulate the storage, transportation, and disposal of hazardous wastes. By planning for disposal of these pesticides as if they were all hazardous wastes, the Agency has attempted to ensure that the highest existing standards for the protection of human health and the environment will be met.

Prior to final selection of a technique to dispose of the dry silvex-containing products, the Agency considered the major disposal alternatives including: (1) incineration; (2) landspreading, followed by disposal in an appropriate landfill; and (3) disposal in a hazardous waste landfill.

The first option, incineration of dry silvex products, was considered to be

extremely difficult and unreasonably expensive.

The second alternative, landspreading, would involve exposing silvex to ultraviolet radiation to promote degradation to reduce TCDD content, and then disposing of the remains in a landfill. However, spreading the dry silvex over a large area of land would have had the potential to permit additional human exposure to the silvex and the contaminant TCDD. The process would probably be slow and would pose significant logistical problems in moving the silvex first from the interim storage sites to a spreading area, and then to a landfill. In addition, the high levels of water-soluble nitrogen present in the products could cause problems with surface run-off water.

The third alternative, disposal in a secure hazardous waste landfill, was considered more practical and efficient than the other alternatives. Moreover, operators of many of these disposal facilities have considerable experience in the safe disposal of hazardous chemical wastes.

To permit consideration of a wide variety of alternative disposal techniques, however, the Agency published a Request for Proposals (RFP No. WA80 B024) on February 4, 1980, soliciting proposals from any interested party for the disposal of dry pesticides containing silvex. This RFP did *not* limit the proposals to any specific disposal technique, although it did require that any method proposed must be environmentally safe and in compliance with all applicable local, state, and federal legal requirements in effect.

No acceptable proposals were received in response to this RFP and a second RFP (No. WA80-B126), was published on March 28, 1980, again soliciting environmentally sound proposals for the disposal of dry silvex-containing pesticides.

After evaluating the proposals submitted pursuant to this RFP, EPA chose a proposal which met all the requirements of the RFP and which called for the disposal of all of the dry products in a secure chemical waste landfill near Emelle, Alabama. After negotiation, the Agency awarded a contract on September 11, 1980, to Chemical Waste Management, Inc., (CWM) a subsidiary of Waste Management, Inc., of Oakbrook, Illinois.

II. Disposal Contract

A. Qualifications of Contractor.

1. *General characteristics.* CWM has six years of experience in the disposal of hazardous chemical wastes, including pesticide wastes, and is well-equipped for such operations. CWM's experience includes the disposal of other chemical wastes on a scale equivalent to the disposal of the dry silvex. The landfill at Emelle has been permitted by the State of Alabama since 1978 for disposal of hazardous waste and by EPA for disposal of polychlorinated biphenyl waste [PCB's] since June 1978. To date, the Agency has approved landfills on an individual basis only under the standards for landfilling of PCB's established by regulation [40 CFR 761.41]. These standards are the most stringent landfill requirements now in effect and EPA-approved PCB landfills are currently considered by the Agency to be of the highest quality.

2. *Site.* The site of the secure chemical waste landfill operated by CWM is in a rural area of Sumter County, Alabama. The nearest agricultural activity is ¼ mile away. The nearest residence is 1½ miles away; and the nearest town, Emelle, is about five miles to the south.

The average elevation is approximately 250 feet, with a slope generally less than 10%. The disposal facility is above the 100-year flood level (that level at which the probability is 1% that a flood will occur in a given year) for the area. The first groundwater occurs at about 700 feet; the first potable groundwater at 1,100 feet.

The soil at the site is composed of chalky clay varying in depth from 500 feet to over 700 feet. Natural permeability of the soil (that is, the rate at which liquid moves through the soil) at this site is on the order of 1×10^{-7} centimeters/second (cm/sec). The permeability criteria established by EPA for PCB landfills is 1×10^{-7} cm/sec [40 CFR 761.41(b)(1)(ii)]. In addition, in preparing a burial cell for hazardous wastes, CWM follows the normal practice of constructing a low permeability soil liner for the cell.

This combination of physical characteristics and construction techniques significantly limits the potential for the movement of hazardous wastes from this disposal site to the surrounding environment.

3. *Personnel.* Experienced, key personnel assigned by CWM to the silvex disposal project include three chemists (1 Ph.D., 1 Masters, 1 B.S.) and three environmental technicians (all B.S.'s). Support personnel, including manual laborers, also have considerable experience in disposal activities.

4. *Equipment.* CWM has a full range of on-site equipment and support facilities, practically eliminating the need for off-site personnel to enter the disposal area. These on-site facilities include a fully-equipped, analytical laboratory staffed by eight chemists; maintenance and repair operations for the necessary heavy equipment, such as bulldozers and forklifts; and all necessary first-aid and emergency control equipment.

B. Method of Disposal.

The 15–18,000 tons of dry silvex-containing products will be placed in a single burial cell within the CWM landfill, with a capacity of 240,000 cubic yards. The cell which will be used was inspected on June 11, 1980, and approved for PCB disposal by EPA Region IV personnel in July 1980.

Registrants of the dry silvex products will transport the material to the site by truck and/or by rail, on a schedule to be established by CWM, EPA, and the registrants. The schedule will be designed to minimize disruption to local activities and traffic. All the material will be in original consumer containers, mostly either paper bags lined with polyethylene, or 7 mil thick polyethylene bags, ranging in size from 8 to 80 pounds. In some cases, the containers will also be shrink-wrapped with plastic and palletted. EPA and CWM will not accept material which was not prepared for safe transportation in accordance with U.S. Department of Transportation and RCRA requirements, as applicable.

CWM personnel will weigh the trucks on arrival, inspect them for any irregularities, verify the identity of the material, and then escort them to the burial cell. There the silvex pesticides will be unloaded by forklift or by hand and transferred to front end loaders for deposit, in the original containers, in the burial cell. After the unloading is complete, CWM personnel will clean and weigh the trucks, in order to verify the quantities of material disposed of, before releasing them.

At the end of each day's disposal operations, the waste will be covered with 18 inches of compacted clay and then compacted again by bulldozer and earthmover. At the conclusion of the entire disposal project, the cell itself will be covered with 8 feet of compacted soil.

During the disposal operations, CWM will record information daily on the identity, quantity, nature, and condition of each shipment of material received, as well as any special situations encountered and the manner in which they were handled. The location of the buried material within the cell will be accurately indicated on a daily basis on a three-dimensional grid map provided by CWM. The company will also report to EPA and the State of Alabama Department of Public Health on a weekly and monthly basis, including

information on any unusual situations, until the project is completed.

Further details on the planned disposal operation can be obtained from the terms of the contract between EPA and CWM, which is available on request from the information contact listed above.

c. Safety Features.

1. *Environmental integrity.* The physical characteristics of the site and the construction techniques utilized by CWM both contribute to protecting the environmental integrity of the area surrounding the disposal site. Specifically, the site is contoured and bermed (surrounded by raised soil ridges) to prevent any surface run-off water from entering the cell. In addition, any run-off from the cell which might occur will also be collected, solidified and buried on-site.

The distance between the bottom of the burial cell and the nearest groundwater (about 700 feet) and the permeability of the soil meets or exceeds current PCB disposal standards established by EPA (50 ft. of soil between the bottom of the cell liner and the historic high groundwater table, although EPA has proposed to reduce this to 5 ft.). Nonetheless, CWM will perform ambient soil testing in and around the facility before disposal to establish baseline data on the presence of silvex, dioxin or related compounds. The same tests will then be conducted once during disposal and once after completion. If any significant difference in levels of these compounds are detected after final disposal, CWM will remove and bury the contaminated soil on-site. The results of the soil sampling, and the samples themselves, will be reviewed by EPA.

The burial cell has a leachate collection system for collection of any leachate generated, as required by existing PCB disposal regulations. Periodic groundwater monitoring of the cell by CWM will begin with the disposal operations and continue for at least 30 years after the closing of the site. CWM personnel will sample and test monitoring wells around the cell on a quarterly basis. It has also been the practice of State of Alabama officials to sample and test wells at CWM on a semi-annual, unannounced basis. It is expected that unannounced, periodic sampling by the State will continue. Any leachate generated will be removed, solidified, and buried on-site.

The local environment will be protected against possible drift of silvex dust from the pesticide products during burial by the spraying of a fine water mist over the burial cell during actual burial operations if conditions require.

In the event of any accident which might threaten the environment, CWM has a contingency plan which provides, among other things, for trained CWM personnel, in full protective gear, to quickly gather up any spilled pesticides or contaminated soil, and to seal it in 55 gallon steel drums for burial on-site.

2. *Human Safety.* CWM has also developed a detailed safety plan for employees, which includes use of protective personal equipment, health examinations, and measures to limit possible exposure to authorized personnel.

In particular, all personnel coming in contact with the silvex-containing pesticides at any time during inspection, sampling, unloading, or burial will use proper protective equipment, including hard hats, approved goggles, rubber boots and gloves, rubber pants, and organic vapor respirators approved by the National Institute of Occupational Safety and Health.

Access to the disposal site is controlled by the following security features. The site is completely surrounded by a 6-foot chain link fence, is accessible only by a single road and gate, is guarded at night by armed patrols outside the fence, and is manned inside the fence by CWM personnel 24 hours a day.

CWM has developed a general facility contingency plan for preventing or responding to accidental human injury which meets EPA standards for such plans. That plan includes many provisions for contingencies which are not expected to arise during the disposal of silvex pesticides. Parts of the contingency plan which might be pertinent include: specification of on-site personal protective, communications, and emergency response equipment; facility security plans; inspection and testing schedules for facility elements and equipment; and clean-up procedures.

D. Compliance with Legal Requirements.

CWM's Emelle facility is required to comply with all applicable federal, state, and local requirements including:

(1) Alabama Department of Public Health Hazardous Waste Disposal Permit requirements (February 23, 1978);
(2) Alabama Hazardous Waste Manifest requirements;
(3) Toxic Substances Control Act and applicable rules thereunder, including rules for PCB disposal facilities [40 CFR 761.41]; and
(4) Resource Conservation and Recovery Act [RCRA] and any applicable rules thereunder [40 CFR Parts 264 and 265, effective November 19, 1980].

Under section 3004 of the RCRA, final and interim final regulations applying to owners/operators of disposal facilities were published in May 1980 and will take effect November 19, 1980 (45 FR 33066 et seq., May 19, 1980). these rules establish administrative and technical standards for disposal facilities. The administrative standards include requirements for: (1) waste analysis, security, training and inspection; (2) preparedness and prevention of accidents; (3) contingency plan and emergency procedures; and (4) manifest system, recordkeeping and reporting. The technical standards include requirements for: (1) groundwater monitoring; (2) closure and post-closure plans; and (3) special procedures for disposal of ignitable, reactive or incompatible wastes (not applicable to the silvex-containing end-use products).

E. EPA Oversight.

EPA's Office of Pesticide Programs in Washington, D.C., has assigned Mr. Raymond F. Krueger as project officer with responsibility to coordinate and oversee the project from its beginning through completion and final report. Mr. Krueger is an ecologist with 7 years experience in pesticide and hazardous waste disposal as well as 18 years of experience in pesticide programs, human health and environmental protection. He will be assisted by appropriate personnel from EPA's Region IV Office in Atlanta. These officials will ensure continued compliance with the terms of the contract and their activities will be in addition to any supervision and oversight established by state and/or local government officials.

Any unusual or unexpected incidents will be reported immediately to the EPA Office of Pesticide Programs in Washington, D.C., to Region IV, and appropriate state and local government officials.

F. Public Information.

In order for the local public to be fully informed about the silvex pesticides disposal operations at Emelle, CWM has established an information telephone number which may be called at any time during normal working hours. The CWM contact is Dr. Roger Henson, who may be reached at 205-652-9531. Further information can be obtained by contacting the EPA information contacts listed earlier in this notice.

Copies of pertinent documents may be reviewed at the Emelle disposal site, the Emelle post office, and at the EPA Headquarters and Region IV offices at the addresses listed above.

(Sec. 19 as amended 92 Stat. 918; (7 U.S.C. 136q))

Dated: September 8, 1980.

Edwin L. Johnson,

Deputy Assistant Administrator for Pesticide Program.

[FR Doc. 80-28203 Filed 9-11-80; 8:45 am]

BILLING CODE 6560-01-M

[FRL 1604-7]

Availability of Environmental Impact Statements

AGENCY: Office of Environmental Review (A-104), U.S. Environmental Protection Agency.

PURPOSE: This notice lists the Environmental Impact Statements (EISS) which have been officially filed with the EPA and distributed to Federal agencies and interested groups, organizations and individuals for review pursuant to the Council on Environmental Quality's Regulations (40 CFR part 1506.9).

PERIOD COVERED: This notice includes EIS's filed during the week of September 2, 1980 to September 5, 1980.

REVIEW PERIODS: The 45-day review period for draft EIS's listed in this notice is calculated from September 12, 1980 and will end on October 27, 1980. The 30-day review period for final EIS's as calculated from September 12, 1980 will end on October 14, 1980.

EIS AVAILABILITY: To obtain a copy of an EIS listed in this notice you should contact the Federal agency which prepared the EIS. This notice will give a contact person for each Federal agency which has filed in EIS during the period covered by the notice. If a Federal agency does not have the EIS available upon request you may contact the Office of Environmental Review, EPA, for further information.

BACK COPIES OF EIS'S: Copies of EIS's previously filed with EPA or CEQ which are no longer available from the originating agency are available with charge from the following sources:

For public availability and/or hard copy reproduction of EIS's filed prior to March 1980: Environmental Law Institute, 1346 Connecticut Avenue, NW, Washington, DC 20036.

For hard copy reproduction or microfiche: Information Resources Press, 1700 North Moore Street, Arlington, Virginia 22209, (703) 558-8270.

FOR FURTHER INFORMATION CONTACT: Kathi L. Wilson, Office of Environmental Review (A-104), Environmental Protection Agency, 401 M Street, SW, Washington, DC 20460, (202) 245-3006.

SUMMARY OF NOTICE: On July 30, 1979, the CEQ regulations became effective. Pursuant to section 1506.10(A), the 30-day review period for final EIS's received during a given week will now be calculated from Friday of the following week. Therefore, for all final EIS's received during the week of September 2, 1980 to September 5, 1980 the 30-day review period will be calculated from September 12, 1980. The review period will end on October 14, 1980.

Appendix I sets forth a list of EIS's filed with EPA during the week of September 2, 1980 to September 5, 1980. The Federal agency filing the EIS, the name, address, and telephone number of the Federal agency contact for copies of the EIS, the filing status of the EIS, the actual date the EIS was filed with EPA, the title of the EIS, the state(s) and county(ies) of the proposed action and a brief summary of the proposed Federal action and the Federal agency EIS number, if available, is listed in this notice. Commenting entities on draft EIS's are listed for final EIS's.

Appendix II sets forth the EIS's which agencies have granted an extended review period or EPA has approved a waiver from the prescribed review period. The appendix II includes the Federal agency responsible for the EIS, the name, address, and telephone number of the Federal agency contact, the title, state(s) and county(ies) of the EIS, the date EPA announced availability of the EIS in the Federal Register and the newly established date for comments.

Appendix III sets forth a list of EIS's which have been withdrawn by a Federal agency.

Appendix IV sets forth a list of EIS retractions concerning previous notices of availability which have been made because of procedural noncompliance with NEPA or the CEQ regulations by the originating Federal agency.

Appendix V sets forth a list of reports or additional supplemental information relating to previously filed EIS's which have been made available to EPA by Federal agencies.

Appendix VI sets forth official corrections which have been called to EPA's attention.

Dated: September 9, 1980.

William N. Hedeman, Jr.,

Director, Office of Environmental Review (A-104).

Appendix I—EIS's Filed With EPA During the Week of: September 2, 1980 Through September 5, 1980

U.S. ARMY CORPS OF ENGINEERS

Contact: Mr. Richard Makinen, Office of Environmental Policy, Attn: DAEN-CWR-P, Office of the Chief of Engineers, U.S. Army Corps of Engineers, 20 Massachusetts Avenue, Washington, D.C. 20314, (202) 272-0121.

Draft Supplement

Richard B. Russell Dam and Lake (DS-2), Ga. and S.C., September 3: Proposed is a mitigation plan for the fish and wildlife values associated with construction of the Richard B. Russell Dam and Lake on the Savannah River in Elberat and Hart Counties, Georgia and Abbeville and Anderson Counties, S.C. Four alternative mitigation plans are considered. This statement supplements a final EIS, No. 740823, filed 5-20-74. (EIS Order No. 800659.)

ENVIRONMENTAL PROTECTION AGENCY

Contact: Mr. John Hagan, Region IV, Environmental Protection Agency, 345 Courtland Street, Northest, Atlanta, Georgia 30308, (404) 881-7458.

Final

Estech General Chemicals Corp, Duette Mine, permit, Manatee County, Fla., September 4: Proposed is the issuance of a new source national pollutant discharge elimination system (NPDES) permit to Estech General Chemicals Corporation. Estech has proposed an open pit phosphate mine, benificiation plant and rock dryer on a 10,394 acre site, Duette Mine, located in northeastern Manatee County, Fla. Mining will involve 6,600 acres most of which will be reclaimed, and will produce 3 million tons per year for 21 years. Operation of the proposed facilities requires a mining plan, a water management system and an integrated waste disposal reclamation plan. (EPA-904/9-80-051.) Comments made by: HEW, DOI, COE, USDA, DOC, State and local agencies, groups, individuals and businesses. (EIS Order No. 800662.)

DEPARTMENT OF HOUSING AND URBAN DEVELOPMENT

Contact: Mr. Richard H. Broun, Director, Office of Environmental Quality, Room 7274, Department of Housing and Urban Development, 451 7th Street, S.W., Washington, D.C. 20410. (202) 755-6300.

Draft

Sunrise Ridge Development, mortgage insurance, El Paso County, Colo., September 5: Proposed is the issuance of HUD home mortgage insurance for the Sunrise Ridge Housing Development in Widefield, El Paso County, Colo. The Development would consist of 1,030 single and multi-family homes in 378 acres. Sites will be developed for commercial, school, park and open space

uses. (HUD-RO8-EIS-80-XD.) (EIS Order No. 800664.)

Monte Brisas V Housing Project, mortgage insurance, Puerto Rico, September 3: Proposed is the issuance of HUD home mortgage insurance for the Monte Brisas V Housing Project located in the Fajardo Ward, Puerto Rico. The development would consist of the construction of 700 housing units on 83.18 acres. The dwelling units will include: 1) 525 detached residential units and 175 attached residential units. The alternatives consider: 1) no action, 2) alternate use of land, and 3) variations in types of housing and densitites. (EIS Order No. 800658.)

Wayside Village Mortgage Insurance, Prince William County, Va., September 4: Proposed is the issuance of HUD home mortgage insurance for the Wayside Village to be located in the Dumfries Area of Prince William County, Virginia. The development would include construction of infrastructure improvements to be utilized for 747 single family detached units and 1,043 townhouse units. The improvements will involve construction of streets, sanitary sewers, water sewer lines and other required facilities. (EIS Order No. 800661.)

Clover Leaf Residential Development, Blaine, Anoka County, Minn., September 4: Proposed is the issuance of HUD home mortgage insurance for the Clover Leaf Farm planned residential development in Blaine, Anoka County, Minn. When completed the development would comprise 1,135 units, consisting of mixed single, two and four family homes, located on 336 acres. (HUD-RO5-EIS-79-06-F.) Comments made by: DOI, EPA, State and local agencies, groups. (EIS Order No. 800663.)

Nassau Wood Development, mortgage insurance, Somerset County, N.J., September 3: Proposed is the issuance of HUD mortgage insurance for development of a 668 unit garden apartment complex in Franklin Township, Somerset County, N.J. The project consists of 668 garden apartment units on 70 acres of land, a sewage treatment plant discharging to the Millstone River; and sewers and appurtenances connecting the apartment site to the treatment plant, and the treatment plant to its outfall. Parking will be provided for 1,177 cars. Comments made by: FRC, DOT, GSA, NRC, VA, HEW, COE, USDA, DOI, EPA, State agencies. (EIS Order No. 800657.)

DEPARTMENT OF TRANSPORTATION

Contact: Mr. Martin Convisser, Director, Office of Environment and Safety, U.S. Department of Transportation, 400 7th Street, S.W., Washington, D.C. 20590, (202) 426-4357.

Draft

Dolb Corridor Highway Improvements, Tucson, Pima County, Ariz., September 4: Proposed are improvements to the Kolb Corridor Highway in the city of Tucson, Pima County, Ariz. The project involves the construction of a six to four lane divided arterial highway from 22nd Street to I-10, and improvements to the east-west connector. Six location alternatives are considered, all of which will utilize both existing and new right-of-way. (FHWA-AZ-EIS-80-01-D.) (EIS Order No. 800660.)

Department of Interior

Contact: Mr. Bruce Blanchard, Director, Environmental Project Review, Room 4256 Interior Bldg., Department of the Interior, Washington, D.C. 20240, (202) 343-3891.

Draft

Utah Surface Coal Mining and Reclamation Operation, Several counties, Utah, September 5, this document is a combined draft EIS and petition evaluation concerning surface coal mining and reclamation operations in southern Utah. The prupose of this document is twofold: (1) to review and evaluate the allegations made in the petition to designate certain federal lands as unsuitable for mining, and (2) to evaluate alternative actions that could be implemented by the Secretary of Interior. (OSM-EIS-4.) (EIS Order No. 800666.)

The review period for the above EIS will end on October 15, 1980. (See Appendix II)

Bureau of Land Management

Final

Mountain Foothills Grazing Management, Several counties, Mont., September 2: Proposed is a grazing program for the mountain Foothills in Beaverhead, Deer Lodge, Madison and Silver Bow Counties, Montana. The preferred plan includes: (1) continued operation of 26 existing AMP's, (2) revision of 22 existing AMP's, (3) implementation of 138 AMP's, (4) less intensive grazing management on 281 allotments where AMP's are not proposed, and (5) continuation of unallotted status on approximately 41,190 acres of public land. The alternatives are: (1) limited action, (2) improved watershed and wildlife habitat, (3) accelerated livestock forage development, (4) no action, and (5) elimination of grazing. (FES-80-28.) Comments made by: AHP, DOI, USDA, State and local agencies, groups, individuals and businesses. (EIS Order No. 800655.)

Final

OCS Oil and Gas Lease Sale, No. 53, Pacific Ocean, California, Proposed is the leasing of 242 tracts within the Pacific Ocean, offshore of California extending from waters opposite Humboldt Bay to waters opposite Pt. Conception, for oil and gas exploration. The alternatives consider: (1) total sale offering, (2) modify sale by deleting tracts, (3) delay sale, and (4) cancel sale. Comments made by: USAF, DOI, COE, DOC, AHP, DOT, EPA, State and local agencies. (EIS Order No. 800665.)

Fish and Wildlife Service

Final date

Currituck Outer Banks National Wildlife Refuge, Currituck County, N.C., September 3: Proposed is the designation of 15,880 acres of barrier beach located on the Currituck Outer Banks, Currituck County, North Carolina as a national wildlife refuge. Approximately 11,317 acres of wetland, 3,097 acres of beach/dunes and 1,466 acres of shrub/woodland areas would be involved. The preferred alternative would provide the optimum degree of protection to the fish and wildlife resources of the outer banks. Land would be acquired for the refuge from the Virginia-North Carolina State line to the Dare County line. In addition to no action, nature conservancy and a wetlands alternatives are considered. Comments made by: DOC, USAF, COE, HUD, EPA, State and local agencies, groups, individuals and businesses. (EIS Order No. 800656.)

EIS's Filed During the Week of Sept. 2 Through Sept. 5, 1980

[Statement title index—by State and county]

State	County	Status	Statement title	Accession No.	Date filed	Originating agency No.
Arizona	Pima	Draft	Kolb Corridor Highway Improvements, Tucson	800660	Sept. 4, 1980	DOT
California		Final	OCS Oil and Gas Lease Sale, No. 53	800665	Sept. 5, 1980	DOI
Colorado	El Paso	Draft	Sunrise Ridge Development, Mortgage Insurance	800664	Sept. 5, 1980	HUD
Florida	Manatee	Final	Estech General Chemicals Corp., Duette Mine, Permit.	800662	Sept. 4, 1980	EPA
Georgia	Elberat	Supplier	Richard B. Russell Dam and Lake (DS-2)	800659	Sept. 3, 1980	COE
	Hart	Supplier	Richard B. Russell Dam and Lake (DS-2)	800659	Sept. 3, 1980	COE
Minnesota	Anoka	Final	Clover Leaf Residential Development, Blaine	800663	Sept. 4, 1980	HUD
Montana	Several	Final	Mountain Foothills Grazing Management	800655	Sept. 2, 1980	DOI
New Jersey	Somerset	Final	Nassau Wood Development, Mortgage Insurance	800657	Sept. 3, 1980	HUD
North Carolina	Currituck	Final	Currituck Outer Banks National Wildlife Refuge	800656	Sept. 3, 1980	DOI
Pacific Ocean		Final	OCS Oil and Gas Lease Sale, No. 53	800665	Sept. 5, 1980	DOI
Puerto Rico		Draft	Monte Brisas v. Housing Project, Mortgage Insurance.	800658	Sept. 3, 1980	HUD
South Carolina	Abbeville	Supplier	Richard B. Russell Dam and Lake (DS-2)	800659	Sept. 3, 1980	COE
	Anderson	Supplier	Richard B. Russell Dam and Lake (DS-2)	800659	Sept. 3, 1980	COE
Utah	Several	Draft	Utah Surface Coal Mining and Reclamation Operation.	800666	Sept. 5, 1980	DOI
Virginia	Prince William	Draft	Wayside Village Mortgage Insurance	800661	Sept. 4, 1980	HUD

Appendix II.—*Extension/Waiver of Review Periods on EIS's Filed With EPA*

Federal agency contact	Title of EIS	Filing status/accession No.	Date notice of availability published in FEDERAL REGISTER	Waiver/ extension	Date review terminates
DEPARTMENT OF INTERIOR					
Mr. Bruce Blanchard, Director, Environmental Project Review, Room 4256, Interior Bldg., Department of the Interior, Washington, D.C. 20240, (202) 343-3891.	Utah Surface Coal Mining and Reclamation Operation.	Draft 800666	Sept. 12, 1980 (see app. I).	Waiver	Oct. 15, 1980.

Appendix III.—*EIS's Filed With EPA Which Have Been Officially Withdrawn By the Originating Agency*

Federal agency contact	Title of EIS	Filing status/accession No.	Date notice of availability published in FEDERAL REGISTER	Date of withdrawal
None.				

Appendix IV.—*Notice of Official Retraction*

Federal agency contact	Title of EIS	Status No.	Date notice published in FEDERAL REGISTER	Reason for retraction
None.				

Appendix V.—*Availability of Reports/Additional Information Relating to EIS's Previously Filed With EPA*

Federal agency contact	Title of report	Date made available to EPA	Accession No.
None.			

Appendix VI.—*Official Correction*

Federal agency contact	Title of EIS	Filing status/accession No.	Date notice of availability published in FEDERAL REGISTER	Correction
ENVIRONMENTAL PROTECTION AGENCY				
Mr. Eugene Wojcik, Region V, Environmental Protection Agency, 230 South Dearborn Street, Chicago, Illinois 60604, (312) 353-2157.	Rural Lake Waste Treatment Study 1, Crystal Lake, Benzie County, Michigan.	Final 800578	Aug. 15, 1980	Published as draft, status of EIS is final. Review period ends on Sept. 15, 1980.

[FR Doc. 80-28234 Filed 9-11-80; 8:45 am]
BILLING CODE 6560-01-M

FEDERAL EMERGENCY MANAGEMENT AGENCY

[FEMA-627-DR]

Texas; Amendment to Notice of Major Disaster Declaration

AGENCY: Federal Emergency Management Agency.

ACTION: Notice.

SUMMARY: This Notice amends the Notice of a major disaster for the State of Texas (FEMA-627-DR), dated August 11, 1980, and related determinations.

DATED: August 29, 1980.

FOR FURTHER INFORMATION CONTACT: Sewall H. E. Johnson, Disaster Response and Recovery, Federal Emergency Management Agency, Washington, D.C. 20472 (202) 634-7848.

NOTICE: The Notice of a major disaster for the State of Texas dated August 11, 1980, is hereby; amended to include the following areas among those areas determined to have been adversely affected by the catastrophe declared a major disaster by the President in his declaraton of August 11, 1980.

The Counties of Duval, Jim Hogg and Kenedy for Federal Assistance to disaster-damaged public schools under Public Law 81-815 and Public Law 81-874, as appropriate.

(Catalog of Federal Domestic Assistance No. 83.300, Disaster Assistance; No. 13.477, School Construction, and No. 13.478, School Maintenance and Operation Assistance.)

William H. Wilcox,

Associate Director, Disaster Response and Recovery, Federal Emergency Management Agency.

[FR Doc. 80-28149 Filed 9-11-80; 8:45 am]
BILLING CODE 6718-03-M

[FEMA-628-DR]

West Virginia; Amendment to Notice of Major Disaster Declaration

AGENCY: Federal Emergency Management Agency.

ACTION: Notice.

SUMMARY: This Notice amends the Notice of a major disaster for the State of West Virginia (FEMA-628-DR), dated August 15, 1980, and related determinations.

DATED: September 2, 1980.

FOR FURTHER INFORMATION CONTACT: Sewall H. E. Johnson, Disaster Response and Recovery, Federal Emergency Management Agency, Washington, D.C. 20472 (202) 634-7848.

NOTICE: The Notice of a major disaster for the State of West Virginia dated August 15, 1980, is hereby amended to include the following area among those areas determined to have been adversely affected by the catastrophe declared a major disaster by the President in his declaration of August 15, 1980.

Raleigh County for Individual Assistance only.

(Catalog of Federal Domestic Assistance No. 83.300, Disaster Assistance)

William H. Wilcox,

Associate Director, Disaster Response and Recovery, Federal Emergency Management Agency.

[FR Doc. 80-28150 Filed 9-11-80; 8:45 am]

BILLING CODE 6718-03-M

COMMISSION OF FINE ARTS

Meeting

The Commission of Fine Arts will next meet in open session on Tuesday, October 7, 1980, at 10:00 a.m. in the Commission's offices at 708 Jackson Place, N.W., Washington, D.C. 20006 to discuss various projects affecting the appearance of Washington, D.C.

Inquiries regarding the agenda and requests to submit written or oral statements should be addressed to Mr. Charles H. Atherton, Secretary, Commission of Fine Arts, at the above address.

Dated in Washington, D.C. September 8, 1980.

Charles H. Atherton,

Secretary.

[FR Doc. 80-28236 Filed 9-11-80; 8:45 am]

BILLING CODE 6330-01-M

FEDERAL MARITIME COMMISSION

Independent Ocean Freight Forwarder License; Applicants

Notice is hereby given that the following applicants have filed with the Federal Maritime Commission applications for licenses as independent ocean freight forwarders pursuant to section 44(a) of the Shipping Act, 1916 (75 Stat. 522 and 46 U.S.C. 841(c)).

Persons knowing of any reason why any of the following applicants should not receive a license are requested to communicate with the Director, Bureau of Certification and Licensing, Federal Maritime Commission, Washington, D.C. 20573.

Roger Ling Wu, d.b.a. Oceanland Service Co., 13440 Loumont Street, Whittier, CA 90601.

Elizabeth Martinez, 1025 Fairway Drive, Miami Beach, FL 33141.

John A. Kwasniewski, d.b.a. Arimar International, 700 Carpenter's Crossing, P.O. Box 136, Folcroft, PA 19032.

Sea-Wing International, Inc., 2360 Devon Avenue, Suite 2019, O'Hare Lake Office Plaza, Des Plaines, IL 60018.

Officers:
James C. Urban, Secretary/Treasurer/Director
Ronald Buikema, Vice President/Director
Karen Larson, President/Chief Executive
Samuel Z. Shoshan

Sea Express International, Inc., 5603 West Raymond St., Suite N, Indianapolis, IN 46241.

Officers:
W. H. Noel, Director
T. B. Hudson, President
S. S. Klinger, Vice President
R. C. Lilly, Jr., Treasurer
R. L. Robertson, Secretary

Sea-Air International Forwarding & Warehouse, Inc., 1029 N.W. Hoyt, Portland, Oregon 97209.

Officers:
Eugene E. Brosterhous, President
Joe T. Namba, Vice President
Robert E. Davis, Secretary
Larry F. Jackson, Sr., Treasurer

Pro-Service Forwarding Co., Inc., 8649 Aviation Blvd., Inglewood, CA 90301.

Officers:
Jack J. Meehan, President
Martin Rosenthal, Vice President
Vincent E. Hunt, Treasurer

By the Federal Maritime Commission.

Dated: September 9, 1980.

Francis C. Hurney

Secretary.

[FR Doc. 80-28250 Filed 9-11-80; 8:45 am]

BILLING CODE 6730-01-M

[Independent Ocean Freight Forwarder License No. 2112]

Miriam Padreda; Order of Revocation

Section 44(c), Shipping Act, 1916, provides that no independent ocean freight forwarder license shall remain in force unless a valid bond is in effect and on file with the Commission. Rule 510.9 of Federal Maritime Commission General Order 4 further provides that a license will be automatically revoked or suspended for failure of a licensee to maintain a valid bond on file.

The bond issued in favor of Miriam Padreda, 2525 S.W. 27th Avenue, Miami, Florida 33133, FMC No. 2112, was cancelled effective August 31, 1980.

By letter dated August 22, 1980, Miriam Padreda was advised by the Federal Maritime Commission that Independent Ocean Freight Forwarder License No. 2112 would be automatically revoked or suspended unless a valid surety bond was filed with the Commission.

Miriam Padreda has failed to furnish a valid surety bond.

By virtue of authority vested in me by the Federal Maritime Commission as set forth in Manual of Orders, Commission Order No. 201.1 (Revised), § 5.01(d) dated August 8, 1977:

Notice is hereby given, that Independent Ocean Freight Forwarder License No. 2112 be and is hereby revoked effective August 31, 1980.

It is ordered, that Independent Ocean Freight Forwarder License No. 2112, issued to Miriam Padreda be returned to the Commission for cancellation.

It is further ordered, that a copy of this Order be published in the Federal Register and served upon Miriam Padreda.

Robert M. Skall,

Deputy Director, Bureau of Certification and Licensing.

[FR Doc. 80-28248 Filed 9-11-80; 8:45 am]

BILLING CODE 6730-01-M

[Agreement No. T-3117-1]

Availability of Finding of No Significant Impact

Upon completion of an environmental assessment, the Federal Maritime

Commission's Office of Environmental Analysis (OEA) has determined that the environmental issues relative to the referenced agreement do not constitute a major Federal action significantly affecting the quality of the human environment within the meaning of the National Environmental Policy Act of 1969 (NEPA), 42 U.S.C. 4321 *et seq.* and that preparation of an environmental impart is not required under section 4332(2)(c) of NEPA.

Agreement No. T-3117-1 between Maher Terminals, Inc. (Maher) and Japan Line, Ltd.; Kawasaki Kisen Kaisha, Ltd.; Mitsui O.S.K. Lines, Ltd.; Nippon Yusen Kaisha and Yamashita-Shinnihon Steamship Co., Ltd. (Lines), modifies the basic agreement between the parties, unde which Maher furnishes the Lines comprehensive container terminal, stevedoring and LCL cargo handling services for the Lines' vessels at Elizabeth, New Jersey. The purpose of the modification is to make certain administrative and financial changes, and to extend the agreement for an additional three-year term with an additional two-year renewal option. The OEA's major environmental concern was whether the improvements to be made by shippers would significantly increase energy usage and/or affect the quality of the air, water, noise and biological environment.

The OEA has determined that the Commission's final resolution of Agreement No. T-3117-1 will cause no significant adverse environmental effects in excess of those created by existing uses.

The environmental assessment is available for inspection on request from the Office of the Secretary, Room 11101, Federal Maritime Commission, Washington, D.C. 20573, telephone (202) 523-5725. Interested parties may comment on the environmental assessment by October 2, 1980. Such comments are to be filed with the Secretary, Federal Maritime Commission, 1100 L Street, N.W., Washington, D.C. 20573. If a party fails to comment within this period, it will be presumed that the party has no comment to make.

Francis C. Hurney,

Secretary.

[FR Doc. 80-28249 Filed 9-11-80; 8:45 am]

BILLING CODE 6730-01-M

FEDERAL TRADE COMMISSION

Premerger Notification Waiting Period; Early Termination; Citicorp

AGENCY: Federal Trade Commission.

ACTION: Granting of request for early termination of the waiting period of the premerger notification rules:

SUMMARY: Citicorp is granted early termination of the waiting period provided by law and the premerger notification rules with respect to the proposed acquisition of voting securities of Inforex, Inc. The grant was made by the Federal Trade Commission and the Assistant Attorney General in charge of the Antitrust Division of the Department of Justice in response to a request for early termination submitted by Citicorp. Neither agency intends to take any action with respect to this acquisition during the waiting period.

EFFECTIVE DATE: August 27, 1980.

FOR FURTHER INFORMATION CONTACT: Naomi Licker, Attorney, Premerger Notification Office, Bureau of Competition, Room 303, Federal Trade Commission, Washington, D.C. 20580 (202) 523-3894.

SUPPLEMENTARY INFORMATION: Section 7A of the Clayton Act, 15 U.S.C. 18a, as added by Title II of the Hart-Scott-Rodino Antitrust Improvements Act of 1976, requires persons contemplating certain mergers or acquisitions to give the Commission and Assistant Attorney General advance notice and to wait designated periods before consummation of such plans. Section 7A(b)(2) of the Act permits the agencies, in individual cases, to terminate this waiting period prior to its expiration and requires that notice of this action be published in the Federal Register.

By direction of the Commission.

Carol M. Thomas,

Secretary.

[FR Doc. 80-28122 Filed 9-11-80; 8:45 am]

BILLING CODE 6750-01-M

Premerger Notification Waiting Period; Early Termination; Geosource, Inc.

AGENCY: Federal Trade Commission.

ACTION: Granting of request for early termination of the waiting period of the premerger notification rules.

SUMMARY: Geosource, Inc. is granted early termination of the waiting period provided by law and the premerger notification rules with respect to the proposed acquisition of all voting securities of Varel Manufacturing Co. The grant was made by the Federal Trade Commission and the Assistant Attorney General in charge of the Antitrust Division of the Department of Justice in response to a request for early termination submitted by Geosource, Inc. Neither agency intends to take any action with respect to this acquisition during the waiting period.

EFFECTIVE DATE: August 27, 1980.

FOR FURTHER INFORMATION CONTACT: Naomi Licker, Attorney, Premerger Notification Office, Bureau of Competition, Room 303, Federal Trade Commission, Washington, D.C. 20580 (202-523-3894).

SUPPLEMENTARY INFORMATION: Section 7A of the Clayton Act, 15 U.S.C. 18a, as added by Title II of the Hart-Scott-Rodino Antitrust Improvements Act of 1976, requires persons contemplating certain mergers or acquisitions to give the Commission and Assistant Attorney General advance notice and to wait designated periods before consummation of such plans. Section 7A(b)(2) of the Act permits the agencies, in individual cases, to terminate this waiting period prior to its expiration and requires that notice of this action be published in the Federal Register.

By direction of the Commission.

Carol M. Thomas,

Secretary.

[FR Doc. 80-28121 Filed 9-11-80; 8:45 am]

BILLING CODE 6750-01-M

Premerger Notification Waiting Period; Early Termination; Sealaska Corp.

AGENCY: Federal Trade Commission.

ACTION: Granting of request for early termination of the waiting period of the premerger notification rules.

SUMMARY: Sealaska Corporation is granted early termination of the waiting period provided by law and the premerger notification rules with respect to the proposed acquisition of certain assets of New England Fish Co. The grant was made by the Federal Trade Commission and the Assistant Attorney General in charge of the Antitrust Division of the Department of Justice in response to a request for early termination submitted by Sealaska Corporation. Neither agency intends to take any action with respect to this acquisition during the waiting period.

EFFECTIVE DATE: August 26, 1980.

FOR FURTHER INFORMATION CONTACT: Naomi Licker, Attorney, Premerger Notification Office, Bureau of Competition, Room 303, Federal Trade Commission, Washington, D.C. 20580 (202-523-3894).

SUPPLEMENTARY INFORMATION: Section 7A of the Clayton Act, 15 U.S.C. 18a, as added by Title II of the Hart-Scott-Rodino Antitrust Improvements Act of 1976, requires persons contemplating certain mergers or acquisitions to give the Commission and Assistant Attorney

General advance notice and to wait designated periods before consummation of such plans. Section 7A(b)(2) of the Act permits the agencies, in individual cases, to terminate this waiting period prior to its expiration and requires that notice of this action be published in the Federal Register.

By direction of the Commission.

Carol M. Thomas,

Secretary.

[FR Doc. 80-28123 Filed 9-11-80; 8:45 am]

BILLING CODE 6750-01-M

Premerger Notification Waiting Period; Early Termination; Spie-Batignolles S.A.

AGENCY: Federal Trade Commission.

ACTION: Granting of request for early termination of the waiting period of the premerger notification rules.

SUMMARY: Spie-Batignolles S.A. is granted early termination of the waiting period provided by law and the premerger notification rules with respect to the proposed acquisition of all stock of Ballenger Corp. The grant was made by the Federal Trade Commission and the Assistant Attorney General in charge of the Antitrust Division of the Department of Justice in response to a request for early termination submitted by Ballenger Corp. Neither agency intends to take any action with respect to this acquisition during the waiting period.

EFFECTIVE DATE: August 27, 1980.

FOR FURTHER INFORMATION CONTACT: Naomi Licker, Attorney, Premerger Notification Office, Bureau of Competition, Room 303, Federal Trade Commission, Washington, D.C. 20580 (202-523-3894).

SUPPLEMENTARY INFORMATION: Section 7A of the Clayton Act, 15 U.S.C. 18a, as added by Title II of the Hart-Scott-Rodino Antitrust Improvements Act of 1976, requires persons contemplating certain mergers or acquisitions to give the Commission and Assistant Attorney General advance notice and to wait designated periods before consummation of such plans. Section 7A(b)(2) of the Act permits the agencies, in individual cases, to terminate this waiting period prior to its expiration and requires that notice of this action be published in the Federal Register.

By direction of the Commission.

Carol M. Thomas,

Secretary.

[FR Doc. 80-28120 Filed 9-11-80, 8:45 am]

BILLING CODE 6750-01-M

Premerger Notification Waiting Period; Early Termination; Union Oil Co. of California

AGENCY: Federal Trade Commision.

ACTION: Granting of request for early termination of the waiting period of the premerger notification rules.

SUMMARY: Union Oil Co. of California is granted early termination of the waiting period provided by law and the premerger notification rules with respect to the proposed acquisition of all voting securities of Westwood Plaza #3 Inc. The grant was made by the Federal Trade Commission and the Assistant Attorney General in charge of the Antitrust Division of the Department of Justice in response to a request for early termination submitted by Union Oil Company. Neither agency intends to take any action with respect to this acquisition during the waiting period.

EFFECTIVE DATE: September 2, 1980.

FOR FURTHER INFORMATION CONTACT: Naomi Licker, Attorney, Premerger Notification Office, Bureau of Competition, Room 303, Federal Trade Commission, Washington, D.C. 20580 (202-523-3894).

SUPPLEMENTARY INFORMATION: Section 7A of the Clayton Act, 15 U.S.C. 18a, as added by Title II of the Hart-Scott-Rodino Antitrust Improvements Act of 1976, requires persons contemplating certain mergers or acquisitions to give the Commission and Assistant Attorney General advance notice and to wait designated periods before consummation of such plans. Section 7A(b)(2) of the Act permits the agencies, in individual cases, to terminate this waiting period prior to its expiration and requires that notice of this action be published in the Federal Register.

By direction of the Commission.

Carol M. Thomas,

Secretary.

[FR Doc. 80-28124 Filed 9-11-80; 8:45 am]

BILLING CODE 6750-01-M

DEPARTMENT OF HEALTH AND HUMAN SERVICES

Food and Drug Administration

[Docket No. 80M-0287]

Abbott Laboratories; Premarket Approval of Abbott-HBe Diagnostic Kit

AGENCY: Food and Drug Administration.

ACTION: Notice.

SUMMARY: The Food and Drug Administration (FDA) announces approval of the application for premarket approval under the Medical device Amendments of 1976 of the Abbott-HBe Diagnostic Kit sponsored by Abbott Laboratories, North Chicago, IL. After reviewing the recommendation of the Microbiology Device Section of the Immunology and Microbiology Devices Panel, FDA notified the sponsor that the application was approved because the device has been shown to be safe and effective for use as recommended in the submitted labeling.

DATE: Petitions for administrative review by October 14, 1980.

ADDRESS: Requests for copies of the summary of safety and effectiveness data and petitions for adminstrative review may be sent to the Hearing Clerk (HFA-305), Food and Drug Administration, Rm. 4-62, 5600 Fishers Lane, Rockville, MD 20857.

FOR FURTHER INFORMATION CONTACT: Henry A. Goldstein, Bureau of Medical Devices (HFK-402), Food and Drug Administration, 8757 Georgia Ave., Silver Spring, MD 20910, 301-427-8162.

SUPPLEMENTARY INFORMATION: The sponsor, Abbott Laboratories, North Chicago, IL, submitted an application for premarket approval of Abbott HBe, a diagnostic kit for the detection of Hepatitis Be Antigen (HBeAg) and antibody (anti-HBe) to FDA on October 3, 1979. The application was reviewed by the Microbiology Device Section of the Immunology and Microbiology Devices Panel, an FDA advisory committee, which recommended approval of the application. On July 15, 1980, FDA approved the application by a letter to the sponsor from the Acting Director of the Bureau of Medical Devices.

A summary of the safety and effectiveness data on which FDA's approval is based is on file in the office of the Hearing Clerk (address above) and is available upon request from that office. Requests should be identified with the name of the device and the Hearing Clerk docket number found in brackets in the heading of this document.

Opportunity for Adminsistrative Review

Section 515(d)(3) of the Federal Food, Drug, and Cosmetic Act (21 U.S.C. 360e(d)(3)) authorizes any interested person to petition under section 515(g) of the act (21 U.S.C. 360e(g)) for administrative review of FDA's decision to approve this application. A petitioner may request either a formal hearing under Part 12 (21 CFR Part 12) of FDA's administrative practices and procedures regulations or a review of the application and of FDA's action by an independent advisory committee of experts. A petition must be in the form

of a petition for reconsideration of FDA action under § 10.33(b) (21 CFR 10.33(b)). A petitioner shall identify the form of review requested (hearing or independent advisory committee) and shall submit with the petition supporting data and information showing that there is a genuine and substantial issue of material fact for resolution through administrative review. After reviewing the petitiion, FDA will decide whether to grant or deny the petition and will publish notice of its decision in the Federal Register. If FDA grants the petition, the notice will state the issue to be reviewed, the form of review to be used, the persons who may participate in the review, the time and place where the review will occur, and other details.

Petitioners may, at any time on or before October 14, 1980 file with the Hearing Clerk (HFA-305), Food and Drug Administration, Rm. 4-62, 5600 Fishers Lane, Rockville, MD 20857, four copies of each petition and supporting data and information, identified with the name of the device and the Hearing Clerk docket number found in brackets in the heading of this document. Received petitions may be seen in the office above between 9 a.m. and 4 p.m., Monday through Friday.

Dated: September 3, 1980.

Joseph P. Hile,

Associate Commissioner for Regulatory Affairs.

[FR Doc. 80-27939 Filed 9-11-80; 8:45 am]

BILLING CODE 4110-03-M

Consumer Participation; Open Meeting

AGENCY: Food and Drug Administration

ACTION: Notice.

SUMMARY: The Food and Drug Administration (FDA) announces a forthcoming consumer exchange meeting to be chaired by Abraham I. Kleks, District Director, Los Angeles District Office, Los Angeles, CA.

DATE: The meeting will be held at 9:30 a.m., Wednesday, September 24, 1980.

ADDRESS: The meeting will be held at the Food and Drug Administration, 1521 W. Pico Blvd., Los Angeles, CA 90015.

FOR FURTHER INFORMATION CONTACT: Gordon L. Scott, Consumer Affairs Officer, Food and Drug Administration, 1521 W. Pico Blvd., Los Angeles, CA 90015, 213-688-4395.

SUPPLEMENTARY INFORMATION: The purpose of this meeting is to encourage dialogue between consumers and FDA officials, to identify and set priorities for current and future health concerns, to enhance relationships between local consumers and FDA's Los Angeles District Office, and to contribute to the agency's policymaking decisions on vital issues.

Dated: September 5, 1980.

Joseph P. Hile,

Associate Commissioner for Regulatory Affairs.

[FR Doc. 80-27940 Filed 9-11-80; 8:45 am]

BILLING CODE 4110-03-M

Consumer Participation; Open Meeting

AGENCY: Food and Drug Administration.

ACTION: Notice.

SUMMARY: The Food and Drug Administration (FDA) announces a forthcoming consumer exchange meeting to be chaired by W. C. Hill, District Director, San Fancisco District Office, San Francisco, CA.

DATE: The meeting will be held at 1 p.m., Thursday, September 11, 1980.

ADDRESS: The meeting will be held at 1401 N. D St., Las Vegas, NV. 89106

FOR FURTHER INFORMATION CONTACT: Sheila A. Hennessey, Consumer Affairs Officer, Food and Drug Administration, 50 United Nations Plaza, Rm. 524, San Francisco, CA 94102, 415-556-2062.

SUPPLEMENTARY INFORMATION: The purpose of this meeting is to encourage dialogue between consumers and FDA officials, to identify and set priorities for current and future health concerns, to enhance relationships between local consumers and FDA's San Francisco District Office, and to contribute to the agency's policymaking decisions on vital issues.

Dated: September 5, 1980.

Joseph P. Hile,

Associate Commissioner for Regulatory Affairs.

[FR Doc. 80-27941 Filed 9-11-80; 8:45 am]

BILLING CODE 4110-03-M

Consumer Participation; Open Meeting

AGENCY: Food and Drug Administration.

ACTION: Notice.

SUMMARY: The Food and Drug Administration (FDA) announces a forthcoming consumer exchange meeting to be chaired by George R. White, District Director, Atlanta District Office, Atlanta, GA.

DATE: The meeting will be held at 1:30 p.m., Tuesday, September 23, 1980.

ADDRESS: The meeting will be held at the Veterans Administration Medical Center, Inc., Bldg. 9, 2d floor, Tuskegee, AL.

FOR FURTHER INFORMATION CONTACT: Janice Moton, Consumer Affairs Officer, Food and Drug Administration, 1182 Peachtree St. NW., Atlanta, GA 30331, 404-881-7355.

SUPPLEMENTARY INFORMATION: The purpose of this meeting is to encourage dialogue between consumers and FDA officials, to identify and set priorities for current and future health concerns, to enhance relationships between local consumers and FDA's Atlanta District Office, and to contribute to the agency's policymaking decisions on vital issues.

Dated: September 5, 1980.

Joseph P. Hile,

Associate Commissioner for Regulatory Affairs.

[FR Doc. 80-27942 Filed 9-11-80; 8:45 am]

BILLING CODE 4110-03-M

[Docket No. 80M-0317]

Edwards Laboratories; Premarket Approval of Model 9310 Lung Water Computer

AGENCY: Food and Drug Administration.

ACTION: Notice.

SUMMARY: The Food and Drug Administration (FDA) announces approval of the application for premarket approval under the Medical Device Amendments of 1976 for the Model 9310 Lung Water Computer sponsored by Edwards Laboratories, Santa Ana, CA. After reviewing the recommendation of the Anesthesiology Device Section of the Respiratory and Nervous System Devices Panel, FDA notified the sponsor that the application was approved because the device has been shown to be safe and effective for use as recommended in the submitted labeling.

DATE: Petitions for administrative review by October 14, 1980.

ADDRESS: Requests for copies of the summary of safety and effectiveness data and petitions for administrative review may be sent to the Hearing Clerk (HFA-305), Food and Drug Administration, Rm. 4-62, 5600 Fishers Lane, Rockville, MD 20857.

FOR FURTHER INFORMATION CONTACT: Henry Goldstein, Bureau of Medical Devices (HFK-402), Food and Drug Administration, 8757 Georgia Ave., Silver Spring, MD 20910, 301-427-8162.

SUPPLEMENTARY INFORMATION: The sponsor, Edwards Laboratories, Santa Ana, CA, submitted an application for premarket approval of the Model 9310 Lung Water Computer to FDA on January 28, 1980. The application was reviewed by the Anesthesiology Device Section of the Respiratory and Nervous

System Devices Panel, an FDA advisory committee, which recommended approval of the application. On July 28, 1980, FDA approved the application by a letter to the sponsor from the Acting Director of the Bureau of Medical Devices.

A summary of the safety and effectiveness data on which FDA's approval is based is on file in the office of the Hearing Clerk (address above) and is available upon request from that office. Requests should be identified with the name of the device and the Hearing Clerk docket number found in brackets in the heading of this document.

Opportunity for Administrative Review

Section 515(d)(3) of the Federal Food, Drug, and Cosmetic Act (the act) (21 U.S.C. 360e(d)(3)) authorizes any interested person to petition under section 515(g) of the act (21 U.S.C. 360e(g)) for administrative review of FDA's decision to approve this application. A petitioner may request either a formal hearing under Part 12 (21 CFR Part 12) of FDA's administrative practices and procedures regulations or a review of the application and of FDA's action by an independent advisory committee of experts. A petition must be in the form of a petition for reconsideration of FDA action under § 10.33(b) (21 CFR 10.33(b)). A petitioner shall identify the form of review requested (hearing or independent advisory committee) and shall submit with the petition supporting data and information showing that there is a genuine and substantial issue of material fact for resolution through administrative review. After reviewing the petition, FDA will decide whether to grant or deny the petition and will publish the notice of its decision in the Federal Register. If FDA grants the petition, the notice will state the issue to be reviewed, the form of review to be used, the persons who may participate in the review, the time and place where the review will occur, and other details.

Petitioners may, at any time on or before October 14, 1980, file with the Hearing Clerk (HFA-305), Food and Drug Administration, Rm. 4-62, 5600 Fishers Lane, Rockville, MD 20857, four copies of each petition and supporting data and information, identified with the name of the device and the Hearing Clerk docket number found in brackets in the heading of this document. Received petitions may be seen in the office above between 9 a.m. and 4 p.m., Monday through Friday.

Dated: September 3, 1980.

Joseph P. Hile,

Associate Commissioner for Regulatory Affairs.

[FR Doc. 80-27938 Filed 9-11-80; 8:45 am]

BILLING CODE 4110-03-M

[Docket No. 80N-0320]

PCB Contaminants; Cooperative Agreement

AGENCY: Food and Drug Administration.

ACTION: Notice.

SUMMARY: The Food and Drug Administration announces its intent to award a Cooperative Agreement to the Health and Welfare, Canada. The purpose of the agreement is to provide financial assistance to continue its study of PCB toxicity in monkeys. The cost of this Cooperative Agreement will be $65,700 for the first year. It is estimated that this agreement will extend for a total of 2 years.

FOR FURTHER INFORMATION CONTACT: Sandra Case, State Contracts and Assistance Agreements Section (HFA-513), Food and Drug Administration, 5600 Fishers Lane, Rockville, MD 20857, 301-443-6604.

SUPPLEMENTARY INFORMATION: This Cooperative Agreement is awarded under section 301 of the Public Health Service Act (42 U.S.C. 241).

This study will provide information for evaluation of an international problem, i.e., the significance of the entry of environmental PCB's into the food supply, and the occurrence of PCB's in mother's milk. Since one of the major areas of contamination is the Great Lakes, the cooperative nature of the study represents a significant move to the pooling of scientific effort to investigate a serious problem that is of concern to both the United States and Canada.

The work to be carried out by the FDA contribution will directly support the maintenance of test animals and analytical work on tissues derived from the test animals. The animals will be housed in the labortories of the Toxicology Research Division, Health Protection Branch (HPB), in a section that has been specifically designed for the maintenance of subhuman primates, in the recently completed New Research Center. The HPB has had previous experience in the maintenance of primates as a result of these extensive studies with other environmental contaminants such as lead and methylmercury. Thus the funds will be used for an integral part of the HPB study, and can only be successfully utilized if the whole project is controlled by the HBP.

Dated: September 5, 1980.

Joseph P. Hile,

Associate Commissioner for Regulatory Affairs.

[FR Doc. 80-27937 Filed 9-11-80; 8:45 am]

BILLING CODE 4110-03-M

DEPARTMENT OF THE INTERIOR

Bureau of Land Management

[CA 7081 WR]

California; Proposed Continuation of Withdrawal and Opportunity for Public Hearing

September 5, 1980.

As a result of the review made pursuant to Section 204(l) of the Federal Land Policy and Management Act of 1976 (90 Stat. 2754; 43 U.S.C. 1714), the Bureau of Land Management, U.S. Department of the Interior, proposes to continue the following Public Water Reserve withdrawal:

San Bernardino Meridian, California

T. 18 S., R. 7 E.,
Sec. 9, NW¼NE¼;
Sec. 15, Lot 7.

The area described aggregates approximately 85.19 acres in San Diego County, California.

This withdrawal was created by Executive Order of December 31, 1912, which segregated the land from settlement, nonmetalliferous location, sale, or entry in order to preserve the public lands and the water thereon for general public use and benefit.

No change in the segregative effect of the withdrawal or the use of the lands is proposed.

For a period of 30 days from the date of publication of this notice, all persons who wish to submit comments, suggestions, or objections in connection with the proposed withdrawal continuation may present their views in writing to the undersigned authorized officer of the Bureau of Land Management.

Notice is hereby given that an opportunity for a public hearing is afforded in connection with the proposed withdrawal continuation. All interested persons who desire to be heard on the proposed continuation must submit a written request for a hearing to the undersigned officer. If the State Director, in his discretion, determines that a public hearing is justified, a notice will be published in the Federal Register giving the time and place of such hearing. The public hearing will be scheduled and conducted in accordance with BLM Manual, Section 2351.16B.

The Bureau of Land Management's procedures provide that the authorized officer will review the justification and recommended termination date for each existing BLM withdrawal to ensure that continuation provides for maximum public and private use of the withdrawn lands consistent with the purpose of the withdrawal and that all withdrawals lacking justification are recommended for either total or partial revocation.

The authorized officer will prepare a report for consideration by the Secretary of the Interior, who will determine whether, and for how long, the continuation of the existing withdrawal is justified. The determination of the Secretary will be published in the Federal Register.

All communications in connection with the withdrawal continuation should be addressed to the undersigned, Bureau of Land Management, Room E-2841, Federal Office Building, 2800 Cottage Way, Sacramento, California 95825.

Walter F. Holmes,

Chief, Branch of Lands and Minerals Operations.

[FR Doc. 80-28107 Filed 9-11-80; 8:45 am]

BILLING CODE 4310-84-M

[CA 8302]

Realty Action Sale; Public Lands in Kern County, Calif.

September 4, 1980.

The following described lands have been identified as suitable for disposal by sale under Sec. 203 of the Federal Land Policy and Management Act of 1976, 90 Stat. 2750, 43 U.S.C. 1713:

Legal description: E½SW¼NE¼, NW¼SW¼NE¼, S½N½SE¼NW¼; W½SE¼SE¼NW¼, SW¼SE¼NW¼, NE¼NW¼SE¼, E½NW¼NW¼SE¼; Sec. 28, T. 32 S., R. 24 E., Mount Diablo Meridian.

Acreage: 70

Value: $42,000.00

The lands are being sold noncompetitively to the Excel Mineral Company to resolve an unauthorized occupancy. The land is presently being used for a milling operation which provides employment to the surrounding community. The land is not needed for a Federal program and the sale will serve a public interest. The sale is consistent with the Bureau's planning for the area and with the local county planning and zoning regulations.

The lands will be transferred into private ownership with the following reservations to the United States: (1) all minerals, and (2) a right-of-way for ditches and canals (Act of August 30, 1890; 43 U.S.C.-945); and will be subject to the following third party rights: (1) a right-of-way across the SE¼NW¼ for railroad purposes as granted to Sunset Western Railway (c/o Southern Pacific Railway) under The Act of March 3, 1875, 43 U.S.C. 934-939, Serial No. LA 01340; (2) a right-of-way across the SE¼ for pipeline purposes as granted to the Southern California Gas Company, Act of February 25, 1920, 30 U.S.C. 185, Serial No. S 4558; (3) a right-of-way across the SE¼NW¼ for a waste water disposal facility as granted to Valley Waste Disposal Company, Act of October 21, 1976, 43 U.S.C. 1761, Serial No. CA 6254; and (4) the rights of prior lessees under oil and gas lease No. Sacramento 019395 to use so much of the surface of said lands as is required for mining operations, without compensation to the patentee for damages resulting from proper mining operations for the duration of said oil and gas lease, and any authorized extension of that lease, in accordance with Sec. 29 of the Act of February 25, 1920, 41 Stat. 437, and the Act of March 4, 1933, 47 Stat. 1570.

Detailed information concerning the sale is available for review at the California State Office, Bureau of Land Management, E-2841 Federal Office Building, 2800 Cottage Way, Sacramento, California 95825

For a period of 45 days from date of publication, interested parties may submit comments to the Secretary of the Interior, LLM 320, Washington, D.C. 20240. Any adverse comments will be evaluated by the Secretary who may vacate or modify this realty action and issue a final determination. In the absence of any action by the Secretary, this realty action will become the final determination of the Department.

Marie M. Getsman,

Acting Chief, Lands Section Branch of Lands and Minerals Operations.

[FR Doc. 80-28112 Filed 9-11-80; 8:45 am]

BILLING CODE 4310-84-M

Las Vegas District Multiple Use Advisory Council; Meeting

The Las Vegas (NV) District Multiple Use Advisory Council will conduct its first meeting October 23 and 24, 1980 in the conference room of the District Office, 4765 W. Vegas Drive. The general objective of the meeting is council orientation and organization. A specific objective is to define the issues the council will deal with in future meetings. To these ends, the following agenda has been adopted:

Oct. 23: 8 a.m.—Convene meeting; 8:15 a.m.—BLM/District orientation; 11 a.m.—Depart on tour of public land; 5 p.m.—return to District Office; recess.

Oct. 24: 8 a.m.—meeting reconvenes; 8:10 a.m.—election of officers; 8:30 a.m.—discussion of Council functions and issues to be addressed; 11 a.m.—public comment period; 12 noon—lunch; 1 p.m.—resolution defining issues council will address; 1:30 p.m.—setting agenda for and date of next meeting; 2 p.m.—adjourn.

The council meeting is open to the public. Persons wishing to address the council should contact Ed Ciliberti of the Las Vegas District Office (385-6463) prior to 4:15 p.m., October 22, 1980 to reserve time during the public comment period. Members of the public may accompany the council on its tour on October 23. Persons accompanying the tour must provide their own transportation, lunch, water, etc.

Summary minutes of the meeting will be kept and will be available for public review at the District Office during business hours (7:30 a.m. to 4:15 p.m.) within 30 days of the meeting's adjournment.

Dated: September 4, 1980.

Kemp Conn,

District Manager.

[FR Doc. 80-28109 Filed 9-11-80; 8:45 am]

BILLING CODE 4310-84-M

Worland District Restricted Motor Vehicle Use

September 10, 1980.

Notice is hereby given in accordance with Executive Order 11644 of February 8, 1972, as amended by Executive Order 11989 of May 25, 1977; Title 43 CFR 8341.2 and Subpart 8342; section 603(c) of Pub. L. 94-579; and in conformance with the principles establised by the National Environmental Policy Act of 1969, as amended (43 U.S.C. 4321), that use of motorized vehicles is restricted on public lands under the administration of the Bureau of Land Management located in Paint Rock Canyon. Motorized vehicles include but are not limited to: automobiles, trucks, four-wheel-drive or low-pressure-tire vehicles, motorcycles and related two-wheel vehicles, snowmobiles, amphibious machines, ground-effect or air-cushion vehicles, recreation campers and any other means of transportation deriving motive power from any source other than muscle. Under the restiction, exceptions may be made for (1) any fire, military, emergency or law enforcement vehicle when used for emergency purposes, or any combat or combat support vehicle when used for national defense purposes, (2) any vehicle whose use is expressly authorized by the Bureau of Land Management under,

permit, lease, license, or contract, and (3) any government vehicle on official business when such use has been authorized in advance by the Bureau of Land Managemet. Review and analysis of resource data and public comment has determined that unrestricted use of this area by motor vehicles would further alter the natural state of the land, damage archeological resources, incrase vegetative damage and erosion problems, conflict with livestock use of the canyon, lead to conflicts among recreation users and would be derimental to wildlife in the area.

From the date of this notice and until such time as the use restriction is reviewed as part of the Bureau's planning system update for the Washakie Planning Unit, and pursuant to 43 CFR Subpart 8342 and applicable Bureau Manual sections, all public lands administered by the Bureau of Land Management within the following described area are hearby regulated as provided above:

Sixth Principal Meridian, Wyoming

Big Horn County

Generally, lands in Paint Rock Canyon and tributary canyons below the rims of those canyons and between the Hyatt Brothers Ranch boundary and the boundary of the Bighorn National Forest. Specifically, the following:

T. 50 N., R. 88 W.,
Sec. 20, All;
Sec. 21, All;
Sec. 22; Lot 3, NW¼NW¼, S½NW½, SW¼, SE¼;
Sec. 23, SE¼SE¼NE¼, E½SE¼, SE¼SW¼SE¼;
Sec. 24, All;
Sec. 25, All;
Sec. 26, Lot 1, NE¼, S½NW¼, N½SW¼, SE¼SW¼, SE¼;
Sec. 27, Lot 1, NE¼, NW¼, E½NE¼SW¼, N½SE¼, SW¼SE¼
Sec. 28, N½NE¼, NE¼NW¼;
Sec. 34, Lot 1, SE¼NW¼;
Sec. 35, Lot 1, NE¼, NE¼NW¼, S½NW¼
Sec. 36, NE¼, N½NW¼, N½N½SW¼NW¼, NE¼SE¼NW¼, N½NW¼SE¼NW¼, SE¼NW¼SE¼NW¼, E½SE¼SE¼NW¼, NE¼SE¼, E½NW¼SE¼.
T. 50 N., R. 89 W.,
Sec. 24, Lots 1, 2, 3, 6, and 7, S½SW¼NE¼, NW¼SE¼.

Maps showing the restricted area and additional information about the restriction are available from the Bureau of Land Management, Worland District office, 1700 Robertson Ave., Worland, Wyoming 82401.

Signs will be posted at Paint Rock Canyon to mark the boundary of the restriction.

This designation order supercedes the emergency vehicle use restriction which was implemented on October 1, 1979. This designation is published as final today. Under 43 CFR 4.21, an appeal may be filed within 30 days with the Interior Board of Land Appeals.

Maxwell T. Lieurance,
State Director.

[FR Doc. 80-28106 Filed 9-11-80; 8:45 am]
BILLING CODE 4310-84-M

National Park Service

Mining Plan of Operations at Death Valley National Monument; Availability

Notice is hereby given that pursuant to the provisions of Section 2 of the Act of September 28, 1976, 16 U.S.C. 1901 et seq., and in accordance with the provisions of § 9.17 of 36 CFR Part 9, E. R. Fegert, Inc. has filed a plan of operations in support of proposed mining activities on lands embracing the Bullfrog Mining Claim within the Death Valley National Monument. This plan is available for public inspection during normal business hours at the Death Valley National Monument Headquarters, Death Valley, California.

Dated: August 28, 1980.

George Von der Lippe,
Superintendent, Death Valley National Monument.

Dated: September 4, 1980.

Stanley T. Albright,
Acting Regional Director, Western Region.

[FR Doc. 80-28340 Filed 9-11-80; 8:45 am]
BILLING CODE 4310-70-M

New River Gorge National River; Notice of Intent To Prepare an Environmental Impact Statement

AGENCY: U.S. National Park Service (NPS), Department of the Interior.

ACTION: Notice.

SUMMARY: Notice is hereby given that the National Park Service, in compliance with Pub. L. 91-190 (83 Stat. 853) will prepare a draft environmental impact statement on the general management plan for New River Gorge National River. New River Gorge National River was established November 10, 1978 by Pub. L. 95-625, which also required the submittal of a general management plan to Congress within three years from the establishment date. Prior to the decision to prepare a draft environmental impact statement, two series of meetings were held which contributed to the decision to prepare the statement. Public meetings to identify management issues and potential solutions were held between May 12 and May 15, 1980. Meetings with affected federal, state, and local agencies and private groups to determine the scope of issues to be addressed and to identify the significant issues related to proposed alternative actions were held between July 8 and July 14, 1980. Any other affected federal, state, and local agencies, Indian tribes, or interested groups are hereby invited to participate in determining the scope of issues to be addressed and identifying the significant issues related to proposed alternative actions.

DATE: Comments must be received by October 15, 1980.

ADDRESS: Send written comments to: Superintendent, New River Gorge National River, 137½ Main St., Oak Hill, W. VA 25901.

FOR FURTHER INFORMATION CONTACT: Superintendent, New River Gorge National River or Team Capt., Dan Huff, Denver Service Center, National Park Service, 755 Parfet Street, P.O. Box 25287, Denver, CO 80225.

Dated: September 5, 1980.

James W. Coleman, Jr.,
Acting Regional Director, Mid-Atlantic Region.

[FR Doc. 80-28341 Filed 9-11-80; 8:45 am]
BILLING CODE 4310-70-M

Office of Surface Mining Reclamation and Enforcement

Petition To Designate Certain Federal Lands in Southern Utah Unsuitable for Surface Coal Mining Operations; Availability of Draft Combined Petition Evaluation and Environmental Impact Statement

AGENCY: Office of Surface Mining Reclamation and Enforcement (OSM), U.S. Department of the Interior, Washington, DC 20042.

ACTION: Notice of availability of the draft combined petition evaluation and environmental impact statement (EIS) document evaluating whether certain lands in Southern Utah are unsuitable for surface coal mining and reclamation operations.

SUMMARY: The Office of Surface Mining, with the assistance of several Federal agencies and the State of Utah, has prepared an evaluation of the petition to designate certain Federal lands in Southern Utah unsuitable for all or certain types of surface coal mining and reclamation operations together with a draft environmental impact statement.

Copies of the combined statement are being made available today. OSM has arranged for expedited delivery to assure that known interested parties

have a full 30 days for review. The public is encouraged to comment on the combined document, and public hearings will be held on September 29 and 30, 1980, and October 10, 1980.

Additional information on the mailing address for comments and the locations of the public hearings is given below. Additional information on this petition may also be found in Federal Register notices of January 17, 1980 (Receipt of a Complete Petition for Designation of Lands Unsuitable for Surface Coal Mining Operation, 45 FR 3398–99), and April 24, 1980 (Intent to Prepare Coal Resources, Demand, and Impact Statement and Draft Environmental Impact Statement; Scoping Meeting, 45 FR 27836–37).

DATES: An accelerated review schedule has been approved by the Council on Environmental Quality in concurrence with the Environmental Protection Agency. Written comments on the draft document must be received by 5:00 p.m. on October 15, 1980, at the address given below.

Comments may also be presented at the public hearings on September 29 and 30, 1980, and on October 10, 1980, at the locations and times given below.

ADDRESSES: Copies of the draft document are available at the following locations: OSM Headquarters Office, 1951 Constitution Avenue NW., Room 202, Interior South, Washington, DC 20240; OSM Regional Office, Division of State and Federal Programs, Region V, 2nd Floor, Brooks Towers, 1020 15th Street, Denver, CO 80202; and Bureau of Land Management, 320 North 100 East, Kanab, UT 84741. Written comments on the draft document may be mailed or hand-carried and must be received by the date and time given above, to the OSM Regional Office, Division of State and Federal Programs, Region V, 2nd Floor, Brooks Towers, 1020 15th Street, Denver, CO 80202. All comments received on the draft document and the file on the petition are available for inspection at the OSM Regional Office in Denver, Colorado.

A public hearing will be held on September 29, 1980, at the Red Hills Motel Convention Center, 125 West Center, Kanab, Utah. A special session will be held beginning at 10:00 a.m. for presentation of comments from panel or persons representing: (1) The petitioners; (2) intervenors (if any); (3) the State of Utah; and (4) other Federal agencies. Comments given in this special session will be limited to two hours, except where the number electing to present comments is small enough to allow more time. A second session intended for the general public will begin at 7:00 p.m. on September 29, 1980, at the same address in Kanab, Utah. On September 30, 1980, beginning at 7:00 p.m., a general public hearing will also be held at the Panguitch High School Gymnasium, U.S. Highway 89, Panguitch, Utah.

A supplemental hearing will be held on October 10, 1980, at 10 a.m. at the Red Hill Motel Convention Center at the same address in Kanab, Utah.

FOR FURTHER INFORMATION CONTACT: Paul Bodenberger, Division of Technical Analysis and Research, Office of Surface Mining, Region V, Brooks Towers, 1020 15th Street, Denver, CO 80202 (telephone: 303–837–5656).

SUPPLEMENTARY INFORMATION: The draft combined petition evaluation and environmental impact statement document presents an analysis of the allegations made in the petition. The document summarizes available information on the petition area (including related NEPA reviews) as well as material from new studies. The document also contains discussion of the potential coal resources in the area, the demand for coal resources, the impact of designation on the environment, the economy and the supply of coal, and the impacts of alternatives available to the Secretary.

Public hearings are scheduled at the times and places indicated under "DATES" and "ADDRESSES" above. Individual testimony at these hearings, other than the special session on September 29, will be limited to 10 minutes except where the number of persons wishing to comment is small enough to allow more time. Anyone who wishes to comment will be given the opportunity to do so. Persons wishing to be scheduled to present testimony should contact the Denver Regional Office of OSM at the address given above. Witnesses are encouraged to bring three copies of written statements to the hearings for presentation to the hearing panel. All comments will be recorded and a transcript of the public hearings will be available for public review. Submission of written statements to the OSM Region V address given above, in advance of the hearing date, would be helpful by giving OSM officials an opportunity to consider appropriate questions which could be asked to clarify or elicit more specific information from the person commenting. Written comments may also be mailed to the OSM Region V Office at the address listed above after the public hearing but must be received no later than the time indicated under "DATES" in order to be considered.

Regulations of the Council on Environmental Quality (CEQ) and the Departmental procedures for compliance with the National Environmental Policy Act require that agencies provide minimum time periods for the receipt of public comments on draft environmental impact statements. (See 40 CFR 1506.10(c), CEQ (45 days), and 45 FR 27547, April 23, 1980, § 4.24(A), Departmental procedures (60 days).) However, these normal minimum review periods may be reduced in consultation with CEQ, the Environmental Protection Agency (EPA), and the Assistant Secretary, Policy, Budget, and Administration, Department of the Interior. (See 40 CFR 1506.10(d) and 45 FR 27547, April 23, 1980, § 4.24(B).)

OSM has completed the required consultation and has been authorized by CEQ and EPA to expedite the public comment period on this draft statement. (See letter from Walter Heine, Director, OSM, to Nicholas Yost, General Counsel, CEQ, dated May 2, 1980, and letter from Nicholas Yost to Walter Heine, dated June 9, 1980. Copies of this correspondence are available in the Administrative Record of this proceeding in the OSM Region V Office in Denver, Colo.) As noted above, OSM will distribute copies of the draft statement by the fastest means possible in order to provide maximum time for public review.

Timely and substantive comments from the public on this combined document and at the public hearings will be considered, and responses will be prepared for inclusion in the final document.

Dated: September 9, 1980.

Joan M. Davenport,

Assistant Secretary of the Interior.

[FR Doc. 80-28270 Filed 9-11-80; 8:45 am]

BILLING CODE 4310-05-M

Water and Power Resources Service

Short-Term Municipal and Industrial Water Service Contract for City of Delta, Colo.; Availability of a Short-Term (5 Years) Contract for the City of Delta

The city of Delta, Colorado, has requested up to 3,000 acre-feet of municipal and industrial (M&I) water annually from the Blue Mesa Reservoir of the Colorado River Storage Project on the Gunnison River for a 5-year period or until water becomes available to the city from Dallas Creek Project. That project is scheduled for completion in 1984.

In response to the city's request, the Department of the Interior, through the Water and Power Resources Service,

intends to enter into a 5-year water service contract for M&I water with the city of Delta. A contract of this type can be entered into be the Service under the provisions of section 9(c)(2) of the Reclamation Project Act of 1939 (53 Stat. 1187), as amended by the Colorado River Storage Project Act of April 11, 1956 (70 Stat. 105). Water released from the Blue Mesa Reservoir through the Curecanti Unit reservoirs, Morrow Point and Crystal, primarily for power generation, is available to meet Delta's needs.

The proposed contract will provide for the quantity of water requested at an estimated $1,500 annually for each 100 acre-foot increment. The contract requires another payment of $1 per acre-foot annually to cover operation and maintenance costs that may be incurred by the United States. That amount is subject to annual review and adjustment over the terms of the contract. Other terms and conditions of the proposed contract will be in compliance with current Reclamation law and Service policy.

A proposed draft contract is available for public review and written comment for 30 days following the date of this announcement. Announcement of meetings relating to the proposed contract will be limited to those parties specifically expressing an interest, unless significant public interest is demonstrated in response to this notice. All written correspondence concerning the proposed contract will be available to the public pursuant to the Freedom of Information Act (80 Stat. 383), as amended.

For further information, please contact Mr. Boyd Holt, Grand Junction Projects Office, 764 Horizon Drive, Grand Junction, Colorado 81501, telephone (303) 243-4992.

Dated: September 5, 1980.

Clifford I. Barrett,

Assistant Commissioner of Water and Power Resources.

[FR Doc. 80-28014 Filed 9-11-80; 8:45 am]

BILLING CODE 4310-09-M

INTERSTATE COMMERCE COMMISSION

Motor Carrier Finance Applications; Decision—Notice

Correction

In FR Doc. 80-22950 appearing on page 50946 in the issue of Thursday, July 31, 1980, make the following correction.

On page 50949, first column, the eighth line from the bottom of the page should have read:

"MC-87103 (Sub-No. 58F); filed: May 15, 1980. Applicant: MILLER TRANSFER &"

BILLING CODE 1505-01-M

Intent To Engage in Compensated Intercorporate Hauling Operations

This is to provide notice as required by 49 U.S.C. 10524(b)(1) that the named corporations intend to provide or to use compensated intercorporate hauling operations as authorized in 49 U.S.C. 10524(b).

1. Parent company: Louis Berkman Company, 330 N. Seventh St., Steubenville, OH 43952.

2. Name of subsidiary:

The Parkersburg Steel Company, 330 North Seventh Stree, Steubenville, OH 43952, Steubenville, Ohio;
Meyer Products, Inc., 18513 Euclid Avenue, Cleveland, OH 44112, Cleveland, Ohio;
Orrville Products, Inc., 375 E. Orr Street, Orrville, OH 44667, Orrville, Ohio;
Follansbee Steel Corporation, State Street, Follansbee, WV 26037, Follansbee, West Virginia.

1. Parent corporation and address of principal office: Bethlehem Steel Corporation, Martin Tower, Bethlehem, Pa. 18016.

2. Wholly-owned subsidiaries or divisions which will participate in the operations, and address of their respective principal offices:

(a) Buffalo Tank Division, South Avenue, Dunellen, N.J. 08812;
(b) Lane Metal Products, Inc., Box F, Dunellen, N.J. 08812;
(c) Lane Fabricators, Inc., 3705 Trindle Road, Camp Hill, Pa. 17011.

1. The parent corporation: Brunswick Corporation, a Delaware Corporation, with world headquarters located at One Brunswick Plaza, Skokie, Illinois.

2. The wholly-owned subsidiaries which will participate in the operations, and addresses of their respective principal offices are:

a. Sherwood Medical Industries, Inc., a Delaware Corporation, 1831 Olive Street, St. Louis, Missouri.
b. Marine Power International Limited, a Delaware Corporation, 1939 Pioneer Road, Fond du Lac, Wisconsin.
c. Mariner International Co., 1939 Pioneer Road, Fond du Lac, Wisconsin.

1. Parent corporation and address of principal office: Burgie Industries, Inc., 76-90 West Desoto Ave., P.O. Box 13345, Memphis, TN 38113.

2. Wholly-owned subsidiaries which will participate in the operations, and address of their respective principal offices:

(a) Memphis Vinegar, Inc., 1123 Kentucky Street, P.O. Box 13346, Memphis, Tennessee 38113.

1. Parent corporation and address of principal office: Burlington Northern Inc., 176 East Fifth Street, St. Paul, Minnesota 55101.

2. Wholly-owned subsidiaries which will participate in the operations and address of their respective offices:

Arden Lumber Company, Inc., Box 47B, Colville, WA 99114;
Belle Fourche Land Company, CT Corporation System, 1720 Carey Ave., Cheyenne, WY 82001;
BNL Development Corporation, 176 East Fifth St., St. Paul, MN 55101;
BN Terminals, Inc., 6775 E. Evans Ave., P.O. Box 22694, Wellshire Station, Denver, CO 80222;
BN Transport Inc., 6775 E. Evans Ave., P.O. Box 22694, Wellshire Station, Denver, CO 80222;
Burlington Equipment Company, 547 W. Jackson Blvd., Chicago, IL 60606;
Burlington Northern Air Freight Inc., 4350 Von Karman Ave., Newport Beach, CA 92660;
Burlington Northern Airmotive Inc., Wold Chamberlain Field, Minneapolis, MN;
Burlington Northern Dock Corporation, 176 East Fifth Street, St. Paul, MN 55101;
Burlington Northern Foundation, 176 East Fifth Street, St. Paul, MN 55101;
Burlington Northern Inc., 176 East Fifth Street, St. Paul, MN 55101;
Burlington Northern (Manitoba) Limited, 963 Lindsay St., Winnipeg, Manitoba, R3N 1X6;
Douglas Transportation Company, Columbia Falls, MT 59912;
Dreyer Bros., Inc., Suite 904, First Northwestern Bank Center, 175 North 27th St., Billings, MT 59101;
Glacier Park Company, 176 East Fifth Street, St. Paul, MN 55101;
International Shipping Services Inc., 4350 Von Karman Ave., Newport Beach, CA 92660;
Ksanka Lumber Co., Inc., Columbia Falls, MT 59019;
Lemhi Telephone Company, Salmon, Idaho, Gen. Off. 176 E. Fifth St., St. Paul, MN 55101;
Northern Rockies, Pipe LIne Co., 1720 Carey Ave., Cheyenne, WY 82001;
Oregon Electric Railway Company, P.O. Box 571, Portland, OR 97207;
Oregon Trunk Railway, P.O. Box 571, Portland, OR 97207;
Plum Creek Lumber Co., Columbia Falls, MT 59912;
Royal Logging Co., Columbia Falls, MT 59912;
Saxony Corporation, 547 W. Jackson Blvd., Chicago, IL 60606;
Walla Walla Valley Railway Co., BN Depot, P.O. Box 1496, Walla Walla, WA 99362;
Western Fruit Express, 176 E. Fifth St., St. Paul, MN 55101.

1. Parent corporation:

CPC International Inc., International Plaza, Englewood Cliffs, N.J. 07632;
Best Foods, Unit, CPC North America, a Division of CPC International Inc., International Plaza, Englewood Cliffs, N.J. 07632;
Corn Products, Unit, CPC North America, a Division of CPC International Inc., International Plaza, Englewood Cliffs, N.J. 07632.

2. Wholly-owned subsidiaries:

(a) Acme Resin Corporation, 1401 Circle Avenue, Forest Park, Ill. 60130;
(b) Amerchol Corporation, Talmadge Road, P.O. Box 351, Edison, N.J. 08817;
(c) Penick Corporation, 1050 Wall Street West, Lyndhurst, N.J. 07071.
(d) Peterson/Puritan, Inc., Hegeler Lane, Danville, Ill. 61832.
(e) S.B. Thomas, Inc., 930 N. Riverview Drive, Totowa, N.J. 07512.
(f) Dutch Pantry, Inc., 3920 Market Street, Camp Hill, Penn. 17011.
(g) Kemberling Foods, Inc., Routes 11 and 15, Hummels Wharf, Penn. 17831.

1. Parent company:

Chelsea Industries, Inc., 1360 Soldiers Field Road, Boston, MA 02135;
Bes Pak & Co., Montgomery, AL 36109;
Ideal Tape, Lowell, MA 01853.

2. The following divisions:

Davco Division, Haverhill, MA 01853;
Elastic Corp. of America, Columbiana, AL 35051;
Emerson Textile Divison, Chelsea, MA 02150;
Em-Tex, Chelsea, MA 02150;
Gilbert Freeman Co., Chelsea, MA 02150;
Hope Webbing, Pawtucket, R.I. 02860;
Maynard Plastics, Salem, MA 01970;
Novelty Bias, Chelsea, MA 02150;
Poly-Tex, Pittsburgh, PA 15208;
Progressive Service, St. Louis, MO 63103:
Western Dairy Products, San Francisco, CA 94111;
Regent Tape, Lowell, MA 01853;
Specialty Coating, Leominster, MA;
Sun Products, Chelsea, MA 02150;
Tape-Craft, Anniston, AL 36202;
Webster Industries, Peabody, MA 01960.

1. Parent corporation and address of principal office: Dart Container Corporation, 432 Hogsback Road, Mason, Michigan 48854.

2. Wholly-owned subsidiaries which will participate in the operations, and address of their respective principal offices: (a) Dart Container Corporation of Kentucky, U.S. Highway 31 W. So., Box 587, Horse Cave, Kentucky 42749.

1. Parent corporation and address of principal office: Envirotech Corporation, a Delaware corporation, 3000 Sand Hill Road, Menlo Park, California, 94025.

2. Wholly-owned subsidiaries which will participate in the operations and addresses of their respective principal offices:

(a) The Bahnson Company, 1001 South Marshall Street, Winston-Salem, North Carolina, 27108;
(b) The Bahnson Service Company, 1001 South Marshall Street, Winston-Salem, North Carolina, 27108;
(c) The Hawley Corporation, 1001 South Marshall Street, Winston-Salem, North Carolina, 27108;
(d) Chemico Air Pollution Control Corporation, One Penn Plaza, New York, New York 10001;
(e) Envirotech Coal Services Corporation, P.O. Box 1046, Beckley, West Virginia, 25801;
(f) Envirotech Coal Services of West Virginia, P.O. Box 1046, Beckley, West Virginia, 25801;
(g) Goslin-Birmingham, Inc., 3401 8th Avenue, North, Birmingham, Alabama, 35201;
(h) National Sonics Corporation, 250 Marcus Boulevard, Hauppage, New York, 11787.

1. Parent corporation and address of principal office: The Gates Rubber Company, 999 South Broadway, Denver, Colorado 80209.

2. Wholly-owned subsidiaries which will participate in the operations, and address of their respective principal offices:

(a) Gates Energy Products, Inc., 1050 South Broadway, Denver, Colorado 80209;
(b) Gates Export Corporation, c/o The Gates Rubber Company, 999 South Broadway, Denver, Colorado 80209.

1. Parent corporation and address of principal office: The BFGoodrich Company, 500 South Main Street, Akron, Ohio 44318.

2. Wholly-owned subsidiaries which will participate in the operations, and address of their respective principal offices:

(a) Continental Conveyor and Equipment Company, Winfield, Alabama 35594;
(b) Tremco, Inc., 10701 Shaker Blvd., Cleveland, Ohio 44104.

1. Harter Corporation, Prairie Avenue, P.O. Box 400, Sturgis, Michigan 49091.

2. Wholly-owned subsidiaries which will participate in the operations, and address of their respective principal offices:

A. Harter Furniture Ltd., 536 Imperial Road, P.O. Box 636, Guelph, Ontario, Canada NIH 6L5 (100% wholly owned subsidiary);
B. Harter Corporation/Wall Division, 11555 Packard Drive, Box 399, Toll Road Industrial Park, Middlebury, Indiana 56540 (Branch of parent company);
C. Harter Corporation, Industrial Avenue, P.O. Box 71, Van Wert, Ohio 45891 (Branch of parent company).

1. Parent corporation and address of principal office: Kimberly-Clark Corporation, 401 North Lake Street, Neenah, Wisconsin 54956.

2. Wholly-owned subsidiaries which will participate in the operations, and address of their respective principal offices:

(a) Avent, Inc., 401 East Irvington Road, Tucson, Arizona 85714;
(b) Avent, S.A. de C.V., Calzada de los Nogales #251, Nogales, Sonora, Mexico;
(c) K-C Aviation Inc., Outagamie Airport, Appleton, Wisconsin 54911;
(d) Kimberlands, Ltd., 401 North Lake Street, Neenah, Wisconsin 54595;
(e) Kimberly-Clark of Canada Limited, 365 Bloor Street, East, Toronto, Ontario M4W 3L9, Canada;
(f) Kimberly-Clark International, Services Corporation, 2001 Marathon Avenue, Neenah, Wisconsin 54956;
(g) Kimberly-Clark Lumber (Canada), Ltd., 365 Bloor Street, East, Toronto, Ontario M4W 3L9, Canada;
(h) Kimfibers Ltd., 401 North Lake Street, Neenah, Wisconsin 54956;
(i) Kimtech Ltd., 401 North Lake Street, Neenah, Wisconsin 54956;
(j) Kimko, Inc., 900 Bond Court Bldg., Cleveland, Ohio 44114;
(k) Pan-American Paper Co., Inc., P.O. Box 349, Neenah, Wisconsin 54956;
(l) Paper Export Corporation, 1585 Holcomb Bridge Road, Roswell, Georgia 30075;
(m) Peter J. Schweitzer Export Corporation, Newark International Plaza, Newark, New Jersey 07114.

1. Parent: Kusan, Inc., Seven Maryland Farms, Brentwood, TN 37027.

2. Wholly-owned subsidiaries which will participate in the operations, and address of their respective principal offices.

(a) Nichols-Kusan, Inc., Old Tyler Highway, Jacksonville, TX 75766;
(b) Southeastern-Kusan, Inc., Pleasantburg Industrial Park, Greenville, SC 29606;
(c) Mastic Corporation, 131 South Taylor Street, South Bend, IN 46624.

(1) Parent Corporation: National Starch and Chemical Corporation, 10 Finderne Avenue—P.O. Box 6500, Bridewater, New Jersey 08807.

(2) The following wholly-owned subsidiaries will participate in the operation:

(A) Ablestik Laboratories, 833 West 182nd Street, Gardena, California 90248;
(B) Bondmaster Automotive Products, National Starch & Chemical Corp., 2333 Cole Avenue, Birmingham, Michigan 48008;
(C) Dycol Chemicals, Incorporated, 1933 N.W. Waring Road, Dalton, Georgia 30720;
(D) Food Products, Ltd., 2610 J. B. Deschamps Boulevard, Lachine, Quebec H8T 1C9;
(E) Island Falls Starch Company, Inc., Burleigh Street, Island Falls, Maine 04747;
(F) Le Page's Ltd., 50 West Drive, Bramalea, Ontario L6T 2J4;
(G) Lutex Chemical Corporation, 3800 North Hawthorne Street, Chattanooga, Tennessee 37406;
(H) Nacan Products, Ltd., Industrial Park, Collingwood, Ontario L9Y 3Y8;
(I) Permabond International Corp., 480 South Dean Street, Englewood, New Jersey 07361;
(J) Proctor Chemical Company, Inc., Lumber Street, Salisbury, North Carolina 28144;
(K) Scientific Flavors, Inc., 2371 Beryllium Road, Scotch Plains, New Jersey 07076;
(L) Seasonings, Inc., 1090 Pratt Boulevard, Elk Grove Village, Illinois 60007.

1. Parent corporation and address of principal office: Simpson Timber Company, 900 Fourth Avenue, Seattle, WA 98164.

2. Wholly-owned subsidiaries which will participate in the operations, and

address of their respective principal offices:

(a) Simpson Paper Company, One Post Street, San Francisco, CA 94104;
(b) Simpson Building Supply Company, 900 Fourth Avenue, Seattle, WA 98164;
(c) Simpson Redwood Company, 900 Fourth Avenue, Seattle, WA 98164;
(d) Simpson Extruded Plastics Company, P.O. Box 10049, Eugene, OR 97400;
(e) Cal-Pac Industries, Inc., P.O. Box 249, Weaverville, CA 96903;
(f) Simpson Timber Co. (Saskatchewan) Ltd., P.O. Box 760, Hudson Bay, Saskatchewan, Canada SOE 0Y0;
(g) Simpson Timber Co. (Alberta) Ltd., P.O. Box 1079, Whitecourt, Alberta, Canada TOE 2L0.

1. Parent corporation and address of principal office: Square D Company, Executive Plaza, Palatine, Illinois 60067.

2. Wholly-owned subsidiaries which will participate in the operations, and address of their respective principal offices:

(a) Ferro Fabricating Co., Inc., 3333 27th Avenue, No., Birmingham, Alabama 35207;
(b) Yates Industries, Inc., U.S. Highway 130, Bordentown, New Jersey 08505.

1. Parent Corporation: Structural Fibers, Inc., Industrial Parkway, Chardon, Ohio 44024.

2. Wholly-owned subsidiary: Pac-Fab, Inc., Subsidiary of Structural Fibers, Inc., 513 Wicker Street, Sanford, North Carolina 27330.

1. Parent corporation and address of principal office: Westinghouse Electric Corporation, Westinghouse Building, Gateway, Pittsburgh, Pa. 15222.

Wholly-owned subsidiaries which will participate in the operations, and addresses of their respective principal offices:

(a) Ideal School Supplies, 11000 South Lavergne Avenue, Oak Lawn, Illinois 60453;
(b) Wyoming Minerals Corporation, 3900 S. Wadsworth Blvd., Lakewood, Colorado 80235;
(c) Luxaire, Inc., P.O. Box 609, Filbert St., Elyria, Ohio 44035;
(d) Thermo King Corporation, 314 W. 90th Street, Minneapolis, Minnesota 55420;
(e) Western Zirconium, Inc., P.O. Box 3208, Ogden, Utah 84409.

Agatha L. Mergenovich,

Secretary.

[FR Doc. 80-28131 Filed 9-11-80; 8:45 am]

BILLING CODE 7035-01-M

[Docket No. AB-10 (Sub-No. 20F)]

Norfolk & Western Railway Co.—Abandonment—in the Cities of Champaign and Urbana, Ill.; Findings

Notice is hereby given pursuant to 49 U.S.C. 10903 that by a Certificate and Decision decided August 11, 1980, a finding, which is administratively final, was made by the Commission, Review Board Number 5, stating that, subject to the conditions for the protection of railway employees prescribed by the Commission in *Oregon Short Line R. Co.-Abandonment Goshen*, 360 I.C.C. 91 (1979), and further that NW shall keep intact all of the right-of-way underlying the track, including all the bridges and culverts for a period of 120 days from the decided date of the certificate and decision to permit any state of local government agency or other interested party to negotiate the acquisition for public use of all or any portion of the right-of-way, the present and future public convenience and necessity permit the abandonment by the Norfolk and Western Railway Company of a portion of its Champaign Branch, Decatur Division, beginning at Valuation Station 17879+00 and terminating at Valuation Station 17879+00, and appurtenant spur tracks, a distance of approximately 2.3 miles in the Cities of Champaign and Urbana, IL. A certificate of public convenience and necessity permitting abandonment was issued to the Norfolk and Western Railway Company. Since no investigation was instituted, the requirement of § 1121.38(a) of the Regulations that publication of notice of abandonment decisions in the Federal Register be made only after such a decision becomes administratively final was waived. Upon receipt by the carrier of an actual offer of financial assistance, the carrier shall make available to the offeror the records, accounts, appraisals, working papers, and other documents used in preparing Exhibit I (Section 1121.45 of the Regulations). Such documents shall be made available during regular business hours at a time and place mutually agreeable to the parties.

The offer must be filed and served no later than September 29, 1980. The offer, as filed, shall contain information required pursuant to Section 1121.38(b)(2) and (3) of the Regulations. If no such offer is received, the certificate of public convenience and necessity authorizing abandonment shall become effective 45 days from the date of this publication.

Agatha L. Mergenovich,

Secretary.

[FR Doc. 80-28154 Filed 9-11-80; 8:45 am]

BILLING CODE 7035-01-M

[Notice 196]

Assignment of Hearings

September 4, 1980.

Cases assigned for hearing, postponement, cancellation or oral argument appear below and will be published only once. This list contains prospective assignments only and does not include cases previously assigned hearing dates. The hearings will be on the issues as presently reflected in the Official Docket of the Commission. An attempt will be made to publish notices of cancellation of hearings as promptly as possible, but interested parties should take appropriate steps to insure that they are notified of cancellation or postponements of hearings in which they are interested.

MC 99149 (Sub-14F), Midway Motor Freight Lines, Inc., now assigned for hearing on September 29, 1980 at Fort Smith, AR, is canceled and application dismissed.

MC 142416 (Sub-6F), Hamilton Transfer, Storage & Feeds, Inc., now assigned for hearing on September 29, 1980 (1 week) at Cheyenne, WY is postponed indefinitely.

MC 143807 (Sub-3F), Earl Gass And Alvin Wallace d.b.a. G And W Rigging And Erection Company, A Partnership, now assigned for hearing on October 23, 1980 at Nashville, TN is canceled and application is dismissed.

MC 40652 (Sub-5F), Sedalia-Marshall-Boonville Stage Line, Incorporated, now assigned for hearing on October 16, 1980 at Fort Worth, TX is canceled and application dismissed.

MC 37333, Farmers Marketing Association V. Burlington Northern Inc., Union Pacific Railroad Company, The Denver & Rio Grande Western RR & Southern Pacific Transportation Company, now being assigned for hearing on October 28, 1980 (2 days) at Denver, CO location of hearing room will be designated later.

MC 52709 (Sub-378F), Ringsby Truck Lines, Inc., application dismissed.

MC 147472F Jeffrey M. Kornacker, d.b.a. K Transport Co., now assigned for hearing on September 4, 1980 at San Francisco, CA is postponed indefinitely.

MC 96727 (Sub-2F), R.V.J., Inc., is Transferred to Modified Procedure.

MC 147106 (Sub-2F), Carrier Transport Service, now assigned for hearing on September 8, 1980 at San Francisco, CA in Room No. 15018, Federal Bldg., 450 Golden Gate Avenue; September 10, 1980 in Room No. 13216C, 13th Floor, Federal Bldg. 450 Golden Gate Avenue; September 11, 1980 in Room 8053, 8th Floor, Federal Bldg., 450 Golden Gate Avenue; and September 12, 1980 in Room No. 13216C, 13th Floor, Federal Bldg., 450 Golden Gate Avenue.

MC 120978 (Sub-25F), Reinhart Mayer d.b.a. Mater Truck Line, is transferred to Modified Procedure.

MC 126661 (Sub-2F), Frehner Trucking Service, Inc., application dismissed.

MC 145961 (Sub-12F), Ace Trucking Co., Inc., now assigned for hearing on September 9,

1980 at New York, NY in the Federal Bldg., Room D-2206, 26 Federal Plaza.

MC 140163 (Sub-3F), Post & Sons Transfer, Inc., is transferred to Modified Prodedure.

MC 41951 (Sub-44F), Wheatley Trucking, Inc., application is dismissed.

MC 143775 (Sub-72F), Paul Yates, Inc., now assigned for hearing on September 30, 1980 at Los Angeles, CA is transferred to Modified Procedure.

MC 115931 (Sub-83F), Bee Line Transportation, Inc., now assigned for hearing on September 10, 1980 at Billings, MT is transferred to Modified Procedure.

MC 114552 (Sub-224F), Senn Trucking Company, now assigned for hearing on September 8, 1980 at New Orleans, LA is transferred to Modified Procedure.

MC 145516 (Sub-4F), T. G. Stegall Trucking Co., Inc., now assigned for hearing on September 4, 1980 at Washington, DC is transferred to Modified Procedure.

MC 108119 (Sub-159F), E. L. Murphy Trucking Co., now assigned for hearing on October 29, 1980 at Fort Worth, TX is transferred to Modified Procedure.

MC 115841 (Sub-715F), Colonial Refrigerated Transportation, Inc., now assigned for hearing on October 21, 1980 at Nashville, TN is transferred to Modified Procedure.

MC 143402 (Sub-2F), John Hen sal Trucking, Inc., now assigned for hearing on September 22, 1980 at Tulsa, OK, will be held in the Grand Jury Room, U.S. Courthouse & Post Office, 333 West Fourth Street.

MC 144140 (Sub-35F), Southern Freightways, Inc., now assigned for hearing on September 3, 1980 at Orlando, FL is transferred to Modified Procedure.

MC 200 (Sub-396E), Riss International Corporation, now assigned for hearing on November 3, 1980 (5 days) at Austin, TX is canceled and application dismissed.

MC 64373 (Sub-11F), Clarkson Bros. Machinery Haulers, Inc., now assigned for hearing on September 17, 1980 at Washington, DC is transferred to Modified Procedure.

MC 123048 (Sub-456F), Diamond Transportation System, Inc., now assigned for hearing on September 16, 1980 at Birmingham, AL is transferred to Modified Procedure.

MC 136782 (Sub-17F), R.A.N. Trucking Company, now assigned for hearing on September 9, 1980 at Pittsburgh, PA is transferred to Modified Procedure.

MC 148418 (Sub-1F), Mountain High Shipping, Inc., now assigned for hearing on September 3, 1980 at Denver, CO is transferred to Modified Procedure.

MC 121499 (Sub-9F), William Hayes Lines, Inc., now assigned for hearing on September 30, 1980 at Atlanta, GA on October 21, 1980 at Louisville, KY, on October 6, 1980 at Memphis, TN is transferred to Modified Procedure.

MC 121499 (Sub-9F), William Hayes Lines, Inc., now assigned for hearing on September 16, 1980 (4 days) at New York, NY will be held at the Federal Building, F-2220, 26 Federal Plaza.

MC 41951 (Sub-44F), Wheatley Trucking, Inc. now assigned for hearing on September 3, 1980 at Cambridge, MD is cancelled.

MC 200 (Sub-414F), Riss International Corporation, is transferred to Modified Procedure.

MC 140389 (Sub-62F), Osborn Transportation, Inc., is transferred to Modified Procedure.

MC 124835 (Sub-17F), Producer Transport Co., is transferred to Modified Procedure.

MC 118516 (Sub-4F), Mammoth of Alaska, Inc., now being assigned for hearing on November 4, 1980 (4 days) at Anchorage, AK, location of hearing room will be designated later.

MC 113651 (Sub-304F), Indiana Refrigerator Lines, Inc., now assigned for hearing on September 16, 1980 (4 days) at New York, NY is postponed indefinitely.

MC 111812 (Sub-645F), Midwest Coast Transport, Inc., is transferred to Modified Procedure.

MC 44302 (Sub-12F), Defacio Express, Inc., is transferred to Modified Procedure.

MC 147108 (Sub-2F), Carrier Transport Service, now assigned for hearing on September 8, 1980 (5 days) at San Francisco, CA is transferred to Modified Procedure.

MC 136285 (Sub-3 (M2F)), Southern Intermodal Logistics, Inc., now assigned for hearing on October 7, 1980 at Savannah, GA is postponed to October 14, 1980 (4 days) at Savannah, GA will be held in the De Soto Hilton Hotel, Bull & Liberty Streets.

MC 60012 (Sub-100F), Rio Grande Motor Way, Inc., now assigned for hearing on September 15, 1980 at Denver, CO, will be held in Room 381, H.E.W., 1931 Stout Street.

MC 84428 (Sub-22F), Chester Jackson Co., Now assigned for hearing on September 23, 1980 at New York, NY will be held in the Federal Building, Room E-2222, 26 Federal Plaza.

MC 60012 (Sub-100F), Rio Grande Motor Way, Inc., now assigned for continued hearing on September 18, 1980 (2 days) at Salt Lake City, UT, will be held in the Post Office Building, Room 408-409, 350 Main Street.

MC 60012 (Sub-100F), Rio Grande Motor Way, Inc., now assigned for continued hearing on September 22, 1980 (5 days) at Farmington, NM, will be held at the Holiday Inn, 600 E. Broadway.

MC 60012 (Sub-100F), Rio Grande Motor Way, Inc., now assigned for continued hearing on September 29, 1980 (2 days) at Amarillo, TX will be held at the Hilton Motor Inn, 7907 I-40E.

MC 60012 (Sub-100F), Rio Grande Motor Way, Inc., now assigned for continued hearing on October 1, 1980 (3 days) at Arlington, TX will be held at the Rodeway Inn, 833 N. Watson.

MC 60012 (Sub-100F), Rio Grande Motor Way, Inc., now assigned for hearing on November 12, 1980 (3 days) at Denver, CO in a hearing room to be later designated.

AB-43 (Sub-63F), Illinois Central Gulf Railroad Company Abandonment Near Port Gibson and Crosby and Harriston and Fayette, Mississippi, now assigned for hearing on September 23, 1980 at Fayette, MS, is postponed and reassigned to October 7, 1980 (9 days) at Natchez, MS, will be held in the Circuit County Courthouse, County Courthouse, Courthouse Square, Market Street.

MC 37459, Irving Oil Corporation V. Bangor and Aroostook Railroad Company, now assigned for hearing on September 15, 1980 at Washington, DC is postponed to September 18, 1980 at the Offices of the Interstate Commerce Commission, Washington, DC.

MC 101186 (Sub-18F), Arledge Transfer, Inc., is transferred to Modified Procedure.

MC 8515 (Sub-24F), Tobler Transfer, Inc., is transferred to Modified Procedure.

MC 85811 (Sub-12F), Amsco Transportation, Inc., now assigned for hearing on September 29, 1980 (2 days) at Kansas City, MO will be held in Room No. 609, Federal Building, 911 Walnut Street.

MC 136285 (Sub-3(2F)), Southern Intermodal Logistics, Inc., now assigned for hearing on October 7, 1980 (4 days) at Savannah, GA will be held at the De Soto Hilton Hotel, Bull & Liberty Streets.

I&S M 30261, Increased Commuter Fares, De Camp Bus Line, July 1980, Now assigned for hearing on September 9, 1980 (4 days) at New York, NY is postponed to September 16, 1980 (2 days) at New York and continued to September 17, 1980 at Montclair, NJ, in a hearing room to be later designated.

AB 43 (Sub-63F), Illinois Central Gulf Railroad Company Abandonment Near Port Gibson and Crosby and Harriston and Fayette, Mississippi, now assigned for hearing on September 23, 1980 at Fayette, MS is postponed to October 7, 1980 (9 days) at Fayette, MS in a hearing room to be later designated.

MC 143032 (Sub-21F), Thomas J. Walczynski, d.b.a. Walco Transport, is transferred to Modified Procedure.

MC 69397 (Sub-61F), James H. Hartman & Son, Inc., is transferred to Modified Procedure.

MC 125985 (Sub-29F), Auto Driveaway Company, now being assigned for hearing on October 21, 1980 (1 day) at Houston, TX, location of hearing room will be designated later.

MC 61592 (Sub-465F), Jenkins Truck Line, Inc., now assigned for hearing on September 16, 1980 at Chicago, IL is transferred to Modified Procedure.

MC 730 (Sub-446F), Pacific Intermountain Express Co., now assigned for hearing on September 17, 1980 (3 days) at Albuquerque, NM, will be held in Room No. 4210, Federal Building, 517 Gold Avenue, South West.

MC 148078 (Sub-1F), Beau Parrish Express Co., Inc., now assigned for hearing on September 10, 1980 at New Orleans, LA is postponed indefinitely.

MC 146448 (Sub-7F), C&L Trucking, Inc., now assigned for hearing on October 30, 1980 at Washingtron, DC is transferred to Modified Procedure.

MC 149333F Ricky Shaw & Sons Transportation Co., Inc., application is dismissed.

Agatha L. Mergenovich,

Secretary.

[FR Doc. 80-28158 Filed 9-11-80; 8:45 am]

BILLING CODE 7035-01-M

[Docket No. AB-43 (Sub-55F)]

Illinois Central Gulf Railroad Co.—Abandonment—Between (1) Vance and Tutwiler, MS, in Tallahatchie and Quitman Counties, MS, and (2) Tutwiler and Belzoni, MS, in Tallahatchie, Sunflower, Coahoma, and Humphreys Counties, MS; Findings

Notice is hereby given pursuant to 49 U.S.C. 10903 that by a decision decided November 8, 1979, a finding, which is administratively final, was made by the Administrative Law Judge, stating that, the public convenience and necessity permit the abandonment by the Illinois Central Gulf Railroad Company of the line of railroad on the Sunflower District (1) between milepost 80.84 at Vance, MS, and milepost 87.20 at Tutwiler, MS, a distance of 6.36 miles in Tallahatchie and Quitman Counties, MS, and (2) between milepost 91.66 at Tutwiler, MS, and milepost 158.5 at Belzoni, MS, a distance of 66.8 miles in Tallahatchie, Sunflower, Coahoma and Humphreys Counties, MS, subject (1) to the imposition of the labor conditions prescribed for the protection of railway employees in *Oregon Short Line Railroad Company-Abandonment Goshen,* 360 I.C.C. 91 (1979); and (2) to the condition that applicants shall give protestants or any responsible parties an opportunity to purchase the line of railroad sought to be abandoned. A certificate of abandonment will be issued to the Illinois Central Gulf Railroad Company based on the above-described finding of abandonment, 30 days after publication of this notice (October 14, 1980), unless within 30 days from the date of publication, the Commission further finds that:

(1) A financially responsible person (including a government entity) has offered financial assistance (in the form of a rail service continuation payment) to enable the rail service involved to be continued. The offer must be filed and served no later than 15 days after publication of this Notice; and

(2) It is likely that such proffered assistance would:

(a) Cover the difference between the revenues which are attributable to such line of railroad and the avoidable cost of providing rail freight service on such line, together with a reasonable return on the value of such line, or

(b) Cover the acquisition cost of all or any portion of such line of railroad.

If the Commission so finds, the issuance of a certificate of abandonment will be postponed for such reasonable time, not to exceed 6 months, as is necessary to enable such person or entity to enter into a binding agreement, with the carrier seeking such abandonment, to provide such assistance or to purchase such line and to provide for the continued operation of rail services over such line. Upon notification to the Commission of the execution of such an assistance or acquisition and operating agreement, the Commission shall postpone the issuance of such a certificate for such period of time as such an agreement (including any extensions or modifications) is in effect. Information and procedures regarding the financial assistance for continued rail service or the acquisition of the involved rail line are contained in the Notice of the Commission entitled "Procedures for Pending Rail Abandonment Cases" published in the Federal Register on March 31, 1976, at 41 FR 13691, as amended by publication of May 10, 1978, at 43 FR 20072. All interested persons are advised to follow the instructions contained therein as well as the instructions contained in the above-referenced decision.

Agatha L. Mergenovich,

Secretary.

[FR Doc. 80-28163 Filed 9-11-80; 8:45 am]

BILLING CODE 7035-01-M

Long- and Short-Haul Applications for Relief (Formerly Fourth Section Application)

September 5, 1980.

These applications for long- and short-haul relief have been filed with the I.C.C.

Protests are due at the I.C.C. on or before September 29, 1980.

No. 43858, Southwestern Freight Bureau, Agent (No. B-91), reduced rates on petroleum alkylate detergent intermediate, in tank carloads, between Chocolate Bayou, TX, on the one hand, and East St. Louis, IL and St. Louis, MO, on the other. Rates are published in Supplement 67 to its Tariff ICC SWFB 4616, scheduled to become effective September 30, 1980. Grounds for relief—rate relationship and market competition.

No. 43859, Southwestern Freight Bureau, Agent (No. B-84), rates on hexamethylene diamine solution, in tank carloads, from Houston, Orange and Texas City, TX, to Seaford, DE and Washington, WV, and on sodium nitrite solution, in tank carloads, from Gibbstown, NJ to Geismar, LA. Rates are published in Supplement 67 to its Tariff ICC SWFB 4616, scheduled to become effective October 1, 1980. Grounds for relief—market competition.

By the Commission.

Agatha L. Mergenovich,

Secretary.

[FR Doc. 80-28156 Filed 9-11-80; 8:45 am]

BILLING CODE 7035-01-M

[Finance Docket No. 29430F]

NWS Enterprises, Inc.—Control—Norfolk & Western Railway Co. and Southern Railway Co.; Intent

NWS Enterprises, Inc. (NWS), Norfolk and Western Railway Company (NW), and Southern Railway Company (SRC) hereby give notice that they will file with the Interstate Commerce Commission on or about December 1, 1980, a joint application under 49 U.S.C. 11343 seeking approval and authorization of the acquisition by NWS, a newly incorporated non-carrier holding company, of control of NW and SRC through stock ownership.

NWS, NW, and SRC also intend to file on or about December 1, 1980, applications directly related to the control application, seeking authorization under 49 U.S.C. 10901 to construct and operate rail lines, under 49 U.S.C. 10903 to abandon lines of railroad, under 49 U.S.C. 11301 to issue securities and assume obligation, and under 49 U.S.C. 11343 to acquire trackage rights.

NWS, NW, and SRC intend to prepare a rail traffic diversion study for purposes of their control application. This study will be based upon traffic for the 1979 calendar year. This application will be filed under the requirements of 49 C.F.R. Part 1111 relating to major transactions.

Agatha L. Mergenovich,

Secretary.

[FR Doc. 80-28162 Filed 9-11-80; 8:45 am]

BILLING CODE 7035-01-M

[Service Order No. 1344; I.C.C. Order No. 55; Amdt. No. 3]

Railroads; Rerouting Traffic

To: All railroads.

Upon further consideration of I.C.C. Order No. 55, and good cause appearing therefor:

It is ordered,

I.C.C. Order No. 55 is amended by substituting the following paragraph (g) for paragraph (g) thereof:

(g) *Expiration date.* This order shall expire at 11:59 p.m., November 15, 1980, unless otherwise modified, amended or vacated.

Effective date. This amendment shall become effective at 11:59 p.m., August 15, 1980.

This amendment shall be served upon the Association of American Railroads, Car Service Division, as agent of all railroads subscribing to the car service and car hire agreement under the terms of that agreement, and upon the American Short Line Railroad Association. A copy of this amendment shall be filed with the Director, Office of the Federal Register.

Issued at Washington, D.C., August 14, 1980.

Interstate Commerce Commission.

Joel E. Burns,

Agent.

[FR Doc. 80-28161 Filed 9-11-80; 8:45 am]

BILLING CODE 7035-01-M

[Service Order No. 1344; I.C.C. Order No. 63; Amdt. No. 2]

Railroads; Rerouting Traffic

To: All railroads.

Upon further consideration of I.C.C. Order No. 63, and good cause appearing therefor:

It is ordered,

I.C.C. Order No. 63 is amended by substituting the following paragraph (g) for paragraph (g) thereof:

(g) *Expiration date.* This order shall expire at 11:59 p.m., November 30, 1980, unless otherwise modified, amended, or vacated by order of this Commission.

Effective date. This amendment will become effective at 11:59 p.m., August 31, 1980.

This amendment shall be served upon the Association of American Railroads, Car Service Division, as agent of all railroads subscribing to the car service and car hire agreement under the terms of that agreement, and upon the American Short Line Railroad Association. A copy of this amendment shall be filed with the Director, Office of the Federal Register.

Issued at Washington, D.C., August 21, 1980.

Interstate Commerce Commission.

Joel E. Burns,

Agent.

[FR Doc. 80-28159 Filed 9-11-80; 8:45 am]

BILLING CODE 7035-01-M

[Service Order No. 1464; Exception No. 1; Amdt. No. 1]

Railroads; Service Order

To: All Railroads.

Upon further consideration of Exception No. 1 and good cause appearing therefor:

It is ordered,

Exception No. 1 to Service Order No. 1464 is amended to:

Expire 11:59 p.m., November 30, 1980.

Effective 11:59 p.m., August 31, 1980.

By the Commission, Railroad Service Board, members Joel E. Burns, Robert S. Turkington and William F. Sibbald, Jr.

Joel E. Burns,

Chairman, Railroad Service Board.

[FR Doc. 80-28160 Filed 9-11-80; 8:45 am]

BILLING CODE 7035-01-M

[Finance Docket No. 29232]

Seaboard Coast Line Railroad Co.—Merger—Athens Terminal Co.—Exemption Under 49 U.S.C. 10505 From 49 U.S.C. 11343-11347

AGENCY: Interstate Commerce Commission.

ACTION: Notice of exemption.

SUMMARY: The Interstate Commerce Commission exempts the merger of the Athens Terminal Company into the Seaboard Coast Line Railroad Company, from the provisions of 49 U.S.C. 11343-11347, which require prior approval of the transaction by the Commission.

DATE: This decision shall be effective on September 12, 1980.

FOR FURTHER INFORMATION CONTACT: Ellen Hanson (202) 275-7245.

SUPPLEMENTARY INFORMATION:

Procedural Background

Seaboard Coast Line Railroad Company (SCL) and its wholly owned subsidiary, the Athens Terminal Company (Athens), filed a petition for exemption under 49 U.S.C. 10505 on January 2, 1980. SCL and Athens requested that their proposed merger be exempted from the requirement of obtaining prior Commission approval under 49 U.S.C. 11343-11347. In response to this petition we published a notice in the Federal Register on March 26, 1980, 45 FR 19672 (1980), requesting comments on the proposed exemption. No comments in opposition to the proposed exemption were filed.

Rail Exemption Authority

SCL seeks to have its proposed merger transaction exempt from 49 U.S.C. § 11343-11347 pursuant to 49 U.S.C. § 10505. Section 10505 provides that the Commission can exempt a transaction after an opportunity for a proceeding if the transaction is limited in scope, and the Commission finds that its regulations: (1) is not necessary to carry out the national transportation policy, (2) would be an unreasonable burden, and (3) would serve little or no useful public purpose.

Limited Scope

Athens is presently controlled by SCL, which owns all of the outstanding capital stock of Athens. SCL also owns all of Athens' bonded indebtedness. The proposed merger is solely within the corporate family and is essentially a paper transaction.

Additionally, the merger is of limited geographic significance. SCL is authorized to operate in Alabama, Florida, Kentucky, North Carolina, South Carolina, Tennessee, Virginia, the District of Columbia, and Georgia. Athens, on the other hand, is a terminal railroad consisting of approximately 1.5 miles of tracks located entirely in the City of Athens, Clarke County, Georgia.

The transaction will have no effect on any of the employees since Athens is presently operated by SCL employees as an intergral part of the SCL operation. No shipper or other carrier will be affected by the transaction since there will be no change in the service presently being offered. The only real change that will result from the transaction is an administrative one, directed towards corporate simplification.

Thus, the transaction proposed by SCL and Athens is of limited scope because it is restricted: (1) to a merger within a corporate family, (2) to a small geographic region, (3) by having no impact on employees, and (4) by having no affect on the competitive balance for freight traffic.

National Transportation Policy

The transporation policy of 49 U.S.C. 10101 requires us to provide impartial regulation of modes of transportation subject to Subtitle IV.[1]

Regulation of the SCL-Athens merger is not necessary to carry out the goals of the national transportation policy. It is a merger within a corporate family; the elimination of a corporate entity will be the only change resulting from the transaction. The elimination of Athens will serve simply to eliminate duplicative reporting and bookkeeping

[1] Impartial regulation is achieved through: (1) recognizing and preserving the inherent advantage of each mode; (2) promoting safe, adequate, economical, and efficient transportation; (3) encouraging sound economic conditions among carriers; (4) encouraging the establishment and maintenance of reasonable rates for transportation without unreasonable discrimination or unfair or destructive competitive practices; (5) cooperating with each State on transportation matters; and (6) encouraging fair wages and working conditions in the transportation industry.

and will simplify the corporate structure of SCL. Commission regulation of such a merger is not necessary.

Burden

Commission procedure, *I.C.C. Railroad Acquisition, Control, Merger, Consolidation, Coordination Project, Trackage Rights and Lease Procedures (Consolidation Procedures)*, 49 C.F.R. Part 1111 (1978), requires a complete application to be filed in order for a decision to be reached within the time constraints of 49 U.S.C. § 11345. Compilation of all the materials necessary to comply with the *Consolidation Procedures* is a time-consuming task. Where there has been no public opposition to the proposal, the establishment of a massive record on which to base a decision would appear an unreasonable burden upon the parties.

Public Purpose

Applicant points out that neither the shippers nor the employees will be affected by the merger. Athens is wholly owned by SCL. This corporate simplification should not result in a change in the level of service, since Athen's present service is conducted under the ownership and by the personnel of its parent, SCL.

In light of the facts, our further review of the transaction would serve no useful purpose.

We find:

(1) The application of the requirements of 49 U.S.C §§ 11343–11347 to the merger of the Athens Terminal Company into the Seaboard Coast Line Railroad Company, which is a transaction of limited scope, (a) is not necessary to carry out the transportation policy of section 10101, (b) would be an unreasonable burden on SCL and Athens, and (c) would serve little or no useful purpose.

(2) This decision is not a major Federal action significantly affecting energy consumption or the quality of the human environment.

It is ordered:

(1) The merger of Athens Terminal Company into Seaboard Coast Line Railroad Company is exempted under 49 U.S.C. § 10505 from the requirements of 49 U.S.C. §§11343–11347.

(2) If Athens is merged into SCL, SCL shall within 60 days of the merger, submit three copies of a sworn statement showing all general entries required to record the transaction.

(3) Public notice of our action shall be given to the general public by delivery of a copy of this decision to the Director of the Federal Register, for publication.

(4) This exemption will continue in effect for 90 days from the effective date of this decisions. SCL and Athens must consummate this merger during that time in order to take advantage of the exemption we have granted.

(5) This decision shall be effective on September 12, 1980.

Dated: August 26, 1980.

By the Commission, Chairman Gaskins, Vice-Chairman Gresham, Commissioners Stafford, Clapp, Trantum, Alexis and Gilliam. Commissioner Stafford not participating. Commissioner Trantum absent and not participating.

Agatha L. Mergenovich,

Secretary.

[FR Doc. 80-28156 Filed 9-11-80; 8:45 am]

BILLING CODE 7035-01-M

[Section 5b Application No. 4; Amdt. No. 1]

Southern Ports Foreign Freight Committee—Agreement

September 4, 1980.

AGENCY: Interstate Commerce Commission.

ACTION: Notice of an amendment to the above-entitled application.

SUMMARY: An amendment was filed July 9, 1980, on behalf of the members of the Southern Ports Foreign Freight Committee, to the above-entitled and numbered application for approval of an agreement under the provisions of 49 U.S.C. 10706 (formerly Section 5b of the Interstate Commerce Act). The amendment was filed in order to comply with terms and conditions previously required by the Interstate Commerce Commission. The amendment also states several technical and clarifying changes.

The Complete application may be inspected at the Office of the Commission in Washington, D.C.

Any interested person may protest and participate in this proceeding. As provided by the General Rules of Practice of the Commission, persons other than applicants should fully disclose their interest and the position they intend to take with respect to the application. Otherwise, the Commission, in its discretion, may proceed to investigate and determine the matters involved in such application, without further or former hearing.

DATES: Protests must be received on or before October 14, 1980.

ADDRESSES: An original and 15 copies of comments should be sent to: Office of Proceedings—Room 5340, Interstate Commerce Commission, Washington, D.C.

FOR FURTHER INFORMATION CONTACT: Richard Felder, (202) 275–7693.

Agatha L. Mergenovich,

Secretary.

[FR Doc. 80-28157 Filed 9-11-80 8:45 am]

BILLING CODE 7035-01-M

Permanent Authority Decisions

Correction

In FR Doc. 80–21740, published at page 48953, in the issue of Tuesday, July 22, 1980, on Page 48989, in the first column, the first paragraph, in the sixteenth line, "MY" should be corrected to be "NY".

BILLING CODE 1505-01-M

INTERNATIONAL DEVELOPMENT COOPERATION AGENCY

Agency for International Development

Housing Guaranty Program for El Salvador; Information for Lenders

The Agency for International Development (A.I.D.) has authorized a guaranty of a loan in an amount not to exceed Nine Million Five Hundred Dollars ($9,500,000) to finance a project for low-cost housing and home improvements in El Salvador. Eligible investors as defined below are invited to make proposals to the Minister of Planning of the Government of El Salvador (Borrower). The full repayment of the loan will be guaranteed by A.I.D. The A.I.D. guaranty will be backed by the full faith and credit of the United States of America and will be issued pursuant to authority in Section 222 of the Foreign Assistance Act of 1961, as amended (the Act).

This project is referred to as Project No. 519–HG–006(I).

Lenders (Investors) eligible to receive an A.I.D. guaranty are those specified in Section 238(c) of the Act. They are: (1) U.S. citizens; (2) domestic U.S. corporations, partnerships, or associations substantially beneficially owned by U.S. citizens; (3) foreign corporations whose share capital is at least 95 percent owned by U.S. citizens; and, (4) foreign partnerships or associations wholly owned by U.S. citizens.

Selection of an eligible investor and the terms of the loan are subject to approval by A.I.D. The investor and A.I.D. shall enter into a Contract of Guaranty, covering the loan. Disbursements under the loan will be subject to certain conditions required of a borrower by A.I.D. as set forth in an implementation agreement between A.I.D. and the borrower.

To be eligible for guaranty, the loan must be repayable in full no later than

the thirtieth anniversary of the first disbursement of the principal amount thereof and the interest rate may be no higher than the maximum rate established from time to time by A.I.D. Borrower expects a schedule for disbursements beginning in October, 1980 and extending through October, 1982. At least Two Million Dollars ($2,000,000) will be disbursed at the time of loan execution with no less than another Three Million Five Hundred Thousand Dollars ($3,500,000) for a sub-total of no less than Five Million Five Hundred Thousand Dollars ($5,500,000) to be disbursed within twelve (12) months from the anniversary date of the loan execution. The balance of the loan is to be disbursed within twenty-four (24) months from the date of the first disbursement. There are a maximum of four (4) disbursements. No disbursement can be less thean One Million Dollars ($1,000,000) or within six (6) months of another.

The borrower desires to receive proposals from eligible investors as defined above. Since investor selection will be made on the basis of the proposals, the proposals should contain the best terms to be offered by investors. The proposals should state:

A. The fixed interest rate per annum for a period not to exceed thirty (30) years from the first disbursement.

B. The grace period for repayment of principal; such period not to exceed ten (10) years.

C. The minimum time during which prepayment of principal will not be accepted.

D. The investor's commitment or service fee, if any, and schedule of payment of such fee.

E. The period during which the proposal may be accepted which shall be at least seventy-two (72) hours after the closing date specified below.

The proposal may state other terms and conditions which the investor desires to specify. After investor selection by the borrower and approval by A.I.D., the borrower and investor shall negotiate all other terms and conditions of the Loan Agreement.

In the event the investor will engage in the reselling of the loan to other persons, the investor must provide for the servicing of his loan, i.e., recordation and disposition of loan payments received from the borrower.

The closing date by which prospective investors are requested to submit proposals to the borrower is the close of business on September 30, 1980. Negotiations of the Loan Agreement and Contract of Guaranty is expected to take place in Washington, D.C. within a week or ten (10) days after the borrower selects an investor.

Eligible investors are invited to consult promptly with the borrower. For further information, contact Engineer Carlos Deras or Dr. Luis Gutierrez at the telephone number in El Salvador of the Financiera Nacional de Vivienda (#22-1866). Those investors interested in extending a loan to the borrower should communicate with the borrower at the following address:

The Minister of Planning of the Government of El Salvador: Casa Presidencial, San Salvador, El Salvador, Central America.

To facilitate the selection of the lender, copies of proposals should be sent to: Financiera Nacional de Vivienda, San Salvador, El Salvador, Telex No. 037320272 (FNV).

Information as to the eligibility of investors and other aspects of the A.I.D. housing guaranty program can be obtained from: Director, Office of Housing, Agency for International Development, Room 625, SA/12, Washington, D.C. 20523, telephone: (202) 632-9637.

To facilitate A.I.D. approval, copies of proposals made to the borrower may, at the investor's option, be sent to A.I.D. at the above address on or after the closing date noted above.

This notice is not an offer by A.I.D. or by the borrower. The borrower and not A.I.D. will select an investor and negotiate the terms of the proposed loan.

Dated: September 5, 1980.

David McVoy,

Assistant Director for Operations, Office of Housing.

[FR Doc. 80-28232 Filed 9-11-80; 8:45 am]

BILLING CODE 4710-02-M

DEPARTMENT OF JUSTICE

Bureau of Justice Statistics

Competive Research Solicitation; Criminal Justice, Analysis of Specific Topics; Statistical Techniques and Methods; Extension of Application Deadline for Program JS-5

The deadline for submitting applications for Program JS-5, which was announced on page 37915 of the Federal Register on June 5, 1980, is extended as follows:

Applications must be received by the Bureau of Justice Statistics no later than November 30, 1980.

Dated: September 9, 1980.

Benjamin H. Renshaw,

Acting Director, Bureau of Justice Statistics.

[FR Doc. 80-28208 Filed 9-11-80; 8:45 am]

BILLING CODE 4410-18-M

Competitive Research Solicitation; Criminal Justice for Future Multistate Statistical Programs; Extension of Application Deadline for Program JS-6

The deadline for submitting applications for Program JS-6 which was announced on page 37916 of the Federal Register on June 5, 1980, is extended as follows:

Applications must be received by the Bureau of Justice Statistics no later than December 31, 1980.

Dated: September 9, 1980.

Benjamin H. Renshaw,

Acting Director, Bureau of Justice Statistics.

[FR Doc. 80-28209 Filed 9-11-80; 8:45 am]

BILLING CODE 4410-18-M

DEPARTMENT OF LABOR

Bureau of Labor Statistics

Business Research Advisory Council Committees; Meetings and Agenda

The fall meetings of committees of the Business Research Advisory Council will be held on September 24, 1980.

The meetings of the Committees on Productivity—Foreign Labor and Wages and Industrial Relations will be held in Room N-5437 A, B, & C of the Frances Perkins Department of Labor Building, 200 Constitution Avenue, NW., Washington, D.C.

The Business Research Advisory Council and its committees advise the Bureau of Labor Statistics with respect to technical matters associated with the Bureau's programs. Membership consists of technical officers from American business and industry.

The schedule and agenda of the meetings are as follows:

Wednesday, September 24

9:30 a.m.—Committee on Productivity—Foreign Labor

1. Discussion of issues surrounding Multi-factor Productivity Measures.
2. Other Business.

2:00 p.m.—Committee on Wages and Industrial Relations

1. *Review of OWIR Work in Progress.* Review will cover items included in the work-in-progress report sent to Committee members in advance of the meeting.
2. *OWIR Programs—A Long Range Perspective.* Presentation on program direction anticipated over the next 5 years.

3. *OWIR Program Evaluation.* An overview of plans for a program evaluation effort, now in the planning stages.

The meetings are open to the public. It is suggested that persons planning to attend these meetings as observers contact Kenneth G. Van Auken, Executive Secretary, Business Research Advisory Council on Area Code (202) 523-1559.

Signed at Washington, D.C. this 8th day of September 1980.

Janet L. Norwood,

Commissioner of Labor Statistics.

[FR Doc. 80-28251 Filed 9-11-80; 8:45 am]

BILLING CODE 4510-24-M

NUCLEAR REGULATORY COMMISSION

[Docket No. 50-341A]

The Detroit Edison Co.; Receipt of Operating License Application; Request for Antitrust Information

Note.—This document was originally in the issue of September 5, 1980. It is reprinted at the request of the NRC.

The Detroit Edison Company, owner of the Enrico Fermi Atomic Power Plant Unit 2, filed the general information portion and antitrust information of an application for operating licenses. This information was filed pursuant to Part 2.101 of the Commission Rules and Regulations and is in connection with the owner's plans to operate one light water reactor in Monroe County, Michigan. The portion of the application filed contains antitrust information for review pursuant to NRC Regulatory Guide 9.3 to determine whether there have been any significant changes since the completion of the antitrust review at the construction permit stage.

On completion of staff antitrust review of the above-named application, the Director of Nuclear Reactor Regulation will issue an initial finding as to whether there have been "significant changes" under section 105c(2) of the Act. A copy of this finding will be published in the Federal Register and will be sent to the Washington and local public document rooms and to those persons providing comments or information in response to this notice. If the initial finding concludes that there have not been any significant changes, request for reevaluation may be submitted for a period of 60 days after the date of the Federal Register notice. The results of any reevaluations that are requested will also be published in the Federal Register and copies sent to the Washington and local public document rooms.

A copy of the general information portion of the application for operating licenses and the antitrust information submitted is available for public examination and copying for a fee at the Commission's Public Document Room, 1717 H Street, N.W., Washington, D.C. 20555 and in the local public document room at the Monroe County Library, 3700 South Curte Road, Monroe, Michigan.

Any person who desires additional information regarding the matter covered by this notice or who wishes to have his views considered with respect to significant changes related to antitrust matters which have occurred in the licensee's activities since the construction permit antitrust reviews for the above-named plant should submit such requests for information or views to the U.S. Nuclear Regulatory Commission, Washington, D.C. 20555, Attention: Chief, Utility Finance Branch, Office of Nuclear Reactor Regulation on or before November 4, 1980.

Dated at Bethesda, Maryland this 27th day of August 1980.

For the Nuclear Regulatory Commission.

A. Schwencer,

Chief, Licensing Branch No. 2, Division of Licensing.

[FR Doc. 80-28908 Filed 9-4-80; 8:45 am]

BILLING CODE 7590-01-M

Applications for Licenses To Export/Import Nuclear Facilities or Materials

Pursuant to 10 CFR 110.70(b) "Public Notice of Receipt of an Application", please take notice that the Nuclear Regulatory Commission has received the following application(s) for export/import licenses. A copy of each application is on file in the Nuclear Regulatory Commission's Public Document Room located at 1717 H St., N.W., Washington, D.C.

A request for a hearing or a petition for leave to intervene may be filed within 30 days after publication of this notice in the Federal Register. Any request for hearing or petition for leave to intervene shall be served by the requestor or petitioner upon the applicant, the Executive Legal Director, U.S. Nuclear Regulatory Commission, Washington, D.C. 20555, the Secretary, U.S. Nuclear Regulatory Commission and the Executive Secretary, Department of State, Washington, D.C. 20520.

In its review of applications for license to export production or utilization facilities, special nuclear material or source material, noticed herein, the Commission does not evaluate the health, safety or environmental effects in the recipient nation of the facility or material to be exported.

Dated this day September 8, 1980 at Bethesda, Maryland.

For the Nuclear Regulatory Commission.

James R. Shea,

Director, Office of International Programs.

Name of applicant, date of application, date received, application No.	Material type	Material in kilograms		End-use	Country of destination
		Total element	Total isotope		
Marubeni America, 08/07/80, 08/11/80, XSNM01713	2.97 pct enriched uranium	18,491	485	Routine reload, Shimane unit 1, 9th reload.	Japan.
Transnuclear, 08/12/80, 08/13/80, XSNM01718	45.4 pct enriched uranium	6,500	2,951	For use in the FRG-1 and FRG-2 reactors.	West Germany.
Westinghouse, 08/14/80, 08/19/80, XSNM01719	4.0 pct enriched uranium	*312,000	12,480	Initial cores, spares and 3 reloads each for Taiwan units 7 and 8.	Taiwan.
RMI Company, 8/25/80, 8/27/80, XU08505	Depleted uranium	11,340		In rod sections to be machined into fuel pins in Canada and West Germany for final use at the Tuwaitha facility.	Iraq.

[FR Doc. 80-28164 Filed 9-11-80; 8:45 am]

BILLING CODE 7590-01-M

[Docket No. 50-313]

Arkansas Power & Light Co., Arkansas Nuclear One, Unit No. 1; Order for Modification of License

I. The Arkansas Power & Light Company (licensee) is the holder of Facility Operating License No. DPR-51, which authorizes the operation of the Arkansas Nuclear One, Unit No. 1 at steady state reactor power levels not in excess of 2568 megawatts thermal (rated power). The facility consists of a pressurized water reactor located at the licensee's site in Pope County, Arkansas.

II. On November 4, 1977, the Union of Concerned Scientists (UCS) filed with the Commission a "Petition for Emergency and Remedial Relief." The petition sought action in two areas: fire protection for electrical cables, and environmental qualification of electrical components. By Memorandum and Order dated April 13, 1978 (7 NRC 400), the Commission denied certain aspects of the petition and, with respect to other aspects, ordered the NRC staff to take several related actions. UCS filed a Petition for Reconsideration on May 2, 1978. By Memorandum and Order, dated May 23, 1980, the Commission reaffirmed its April 13, 1978 decision regarding the possible shutdown of operating reactors. However, the Commission's May 23, 1980 decision directed licensees and the NRC staff to undertake certain actions.

With respect to environmental qualification of safety-related electrical equipment, the Commission determined that the provisions of the two staff documents—the Division of Operating Reactors "Guidelines for Evaluating Environmental Qualification of Class 1E Electrical Equipment in Operating Reactors" (DOR Guidelines) and NUREG-0588, "Interim Staff Position on Environemental Qualification of Safety-Related Electrical Equipment," December 1979 "form the requirements which licensees and applicants must meet in order to satisfy those aspects of 10 CFR Part 50, Appendix A General Design Criterion (GDC-4), which relate to environmental qualification of safety-related electrical equipment." The Commission directed, for replacement parts in operating plants, "unless there are sound reasons to the contrary, the 1974 standard in NUREG-0588 will apply." The Commission also directed the staff to complete its review of the information sought from licensees by Bulletin 79-01B [1] and to complete its review of environmental qualification of safety-related electrical equipment in all operating plants, including the publication of Safety Evaluation Reports, by February 1, 1981. The Commission imposed a deadline that, "by no later than June 30, 1982 all safety-related electrical equipment in all operating plants shall be qualified to the DOR Guidelines or NUREG-0588." The Commission requested the staff to, "keep the Commission and the public apprised of any further findings of incomplete environmental qualification of safety-related electrical equipment, along with corrective actions taken or planned," and requested the staff to provide by-monthly progress reports to the Commission.

The Commission further directed the staff to add certain documentation requirements to each license after the specific requirements were approved by the Commission. The Commission also pointed out that the various deadlines imposed in its Order, "do not excuse a licensee from the obligation to modify or replace inadequate equipment promptly."

III. The information developed during this proceeding emphasizes the importance of adequate documentation, the prompt completion of the review of environmental qualification of safety-related electrical equipment, and the prompt completion of any plant modification needed to assure conformance with the DOR Guideline or NUREG-0588. A significant aspect of this review is the timely submittal of environmental qualification information by the operating plant licensees to enable the staff to complete its review in accordance with the Commission's Order. The staff has a program presently underway to reevaluate, using the DOR Guidelines and NUREG-0588, the qualifications of safety-related electrical equipment exposed to environments that may exist following postulated accidents. These accidents are Loss of Coolant Accident and Main Steam Line Break inside containment, and High Energy Line Breaks inside and outside containment.

In this connection the licensee was requested by I&E Bulletin 79-01B of January 14, 1980 to provide a detailed review of the environmental qualification of Class 1E electrical equipment. This review was to include all equipment required to function under postulated accident conditions, both inside and outside the primary containment, and recognize all conditions specified in the bulletin. Evidence of qualification together with methods and justification, was requested.

Clarification was provided by supplemental information, briefings, and in some cases, meetings with the licensee. Timely completion of the staff's review of environmental qualification of electrical equipment and timely completion of needed modifications by the licensee is required to provide continuing reasonable assurance of public health and safety. Such completion is dependent on the prompt receipt of a complete response by the licensee to the staff's requests for information. However, the licensee's response, to date, is incomplete.

Therefore, I have concluded that the public health, safety, and interest require that a firm schedule for the timely submission of all the information previously requested by the staff should be established by Order effective immediately.

II. Accordingly, pursuant to the Atomic Energy Act of 1954, as amended, and the Commission's regulations in 10 CFR Parts 2 and 50, it is ordered that effective immediately Facility Operating License No. DPR-51 is hereby amended to add the following provisions:

> Information which fully and completely responds to the staff's request as specified above, shall be submitted to the Director, Division of Licensing by the licensee not later than November 1, 1980.

An earlier response is encouraged to facilitate staff review and issuance of the safety evaluation report. The licensee or any person whose interest may be affected by this Order may request a hearing within 20 days of the date of this Order. Any request for a hearing will not stay the effective date of this Order. Any request for a hearing shall be addressed to the Director, Office of Nuclear Reactor Regulation, U.S. Nuclear Regulatory Commission, Washington, D.C. 20555. A copy of the request should also be sent to the Executive Legal Director, U.S. Nuclear Regulatory Commission, Washington, D.C. 20555, and to Nicholas S. Reynolds, Debevoise & Liberman, 1200 17th Street, Washington, D.C. 20036, attorney for the licensee.

If a hearing is held concerning this Order, the issue to be considered at the hearing shall be whether the license should be modified to require submission of information as set forth in Section IV. of the Order.

Operating of the facility on terms consistent with this Order is not stayed by the pendency of any proceedings on the Order.

[1] Bulletin 79-01B was not sent to licensees for plants under review as part of the staff's Systematic Evaluation Program. The information sought by Bulletin 79-01B was requested from these licensees by a series of letters and meetings during the months of February and March, 1980.

Effective date: August 29, 1980, Bethesda, Maryland.

For the Nuclear Regulatory Commission.

Darrell G. Eisenhut,

Director, Division of Licensing.

[FR Doc. 80-28178 Filed 9-11-80; 8:45 am]

BILLING CODE 7590-01-M

[Docket Nos. 50-325 and 50-324]

Carolina Power & Light Co., (Brunswick Steam Electric Plant, Units 1 and 2); Order for Modification of Licenses

I

The Carolina Power & Light Company (the licensee) is the holder of Facility Operating License Nos. DPR-71 and DPR-62 which authorize the operation of the Brunswick Steam Electric Plant, Units 1 and 2 at steady state reactor power levels each not in excess of 2436 megawatts thermal (rated power). The facilities consist of boiling water reactors located at the licensee's site in Brunswick County, North Carolina.

II

On November 4, 1977, the Union of Concerned Scientists (UCS) filed with the Commission a "Petition for Emergency and Remedial Relief." The petition sought action in two areas: fire protection for electrical cables, and environmental qualification of electrical components. By Memorandum and Order dated April 13, 1978 (7 NRC 400), the Commission denied certain aspects of the petition and, with respect to other aspects, ordered the NRC staff to take several related actions. UCS filed a petition for Reconsideration on May 2, 1978. By Memorandum and Order, dated May 23, 1980, the Commission reaffirmed its April 13, 1978 decision regarding the possible shutdown of operating reactors. However, the Commission's May 23, 1980 decision directed licensees and the NRC staff to undertake certain actions.

With respect to environmental qualification of safety-related electrical equipment, the Commission determined that the provisions of the two staff documents—the Division of Operating Reactors "Guidelines for Evaluating Environmental Qualification of Class 1E Electrical Equipment in Operating Reactors" (DOR Guidelines) and NUREG-0588, "Interim Staff Position on Environmental Qualification of Safety-Related Electrical Equipment," December 1979 "form the requirements which licensees and applicants must meet in order to satisfy those aspects of 10 CFR Part 5C, Appendix A General Design Criterion (GDC-4), which relate to environmental qualification of safety-related electrical equipment." The Commission directed, for replacement parts in operating plants, "unless there are sound reasons to the contrary, the 1974 standard in NUREG-0588 will apply." The Commission also directed the staff to complete its review of the information sought from licensees by Bulletin 79-01B [1] and to complete its review of environmental qualification of safety-related electrical equipment in all operating plants, including the publication of Safety Evaluation Reports, by February 1, 1981. The Commission imposed a deadline that, "by no later than June 30, 1982 all safety-related electrical equipment in all operating plants shall be qualified to the DOR Guidelines or NUREG-0588." The Commission requested the staff to, "keep the Commission and the public apprised of any further findings of incomplete environmental qualification of safety-related electrical equipment, along with corrective actions taken or planned," and requested the staff to provide bi-monthly progress reports to the Commission.

The Commission further directed the staff to add certain documentation requirements to each license after the specific requirements were approved by the Commission. The Commission also pointed out that the various deadlines imposed in its Order, "do not excuse a licensee from the obligation to modify or replace inadequate equipment promptly."

III

The information developed during this proceeding emphasizes the importance of adequate documentation, the prompt completion of the review of environmental qualification of safety-related electrical equipment, and the prompt completion of any plant modification needed to assure conformance with the DOR Guidelines or NUREG-0588. A significant aspect of this review is the timely submittal of environmental qualification information by the operating plant licensees to enable the staff to complete its review in accordance with the Commission's Order. The staff has a program presently underway to reevaluate, using the DOR Guidelines and NUREG-0588, the qualifications of safety-related electrical equipment exposed to environments that may exist following postulated accidents. These accidents are Loss of Coolant Accident and Main Steam Line Break inside containment, and High Energy Line Breaks inside and outside containment.

In this connection the licensee was requested by I&E Bulletin 79-01B of January 14, 1980 to provide a detailed review of the environmental qualification of Class 1E electrical equipment. This review was to include all equipment required to function under postulated accident conditions, both inside and outside the primary containment, and recognize all conditions specified in the bulletin. Evidence of qualification together with methods and justification, was requested.

Clarification was provided by supplemental information, briefings, and in some cases, meetings with the licensee. Timely completion of the staff's review of environmental qualification of electrical equipment and timely completion of needed modifications by the licensee is required to provide continuing reasonable assurance of public health and safety. Such completion is dependent on the prompt receipt of a complete response by the licensee to the staff's requests for information. However, the licensee's response, to date, is incomplete.

Therefore, I have concluded that the public health, safety, and interest require that a firm schedule for the timely submission of all the information previously requested by the staff should be established by Order effective immediately.

IV.

Accordingly, pursuant to the Atomic Energy Act of 1954, as amended, and the Commission's regulations in 10 CFR Parts 2 and 50, it is ordered that effective immediately Facility Operating License Nos. DPR-71 and DPR-62 are hereby amended to add the following provisions:

Information which fully and completely responds to the staff's request as specified above, shall be submitted to the Director, Division of Licensing by the licensee not later than November 1, 1980.

An earlier response is encouraged to facilitate staff review and issuance of the safety evaluation report. The licensee or any person whose interest may be affected by this Order may request a hearing within 20 days of the date of this Order. Any request for a hearing will not stay the effective date of this Order. Any request for a hearing shall be addressed to the Director, Office of Nuclear Reactor Regulation, U.S. Nuclear Regulatory Commission, Washington, D.C. 20555. A copy of the

[1] Bulletin 79-01B was not sent to licensees for plants under review as part of the staff's Systematic Evaluation Program. The information sought by Bulletin 79-01B was requested from these licensees by a series of letters and meetings during the months of February and March, 1980.

request should also be sent to the Executive Legal Director, U.S. Nuclear Regulatory Commission, Washington, D.C. 20555, and to George F. Trowbridge, Esquire, Shaw, Pittman, Potts & Trowbridge, 1800 M Street, NW., Washington, D.C. 20036, attorney for the licensee.

If a hearing is held concerning this Order, the issue to be considered at the hearing shall be whether the licenses should be modified to require submission of information as set forth in Section IV of the Order.

Operating of the facilities on terms consistent with this Order is not stayed by the pendency of any proceedings on the Order.

Effective date: August 29, 1980, Bethesda, Maryland.

For the Nuclear Regulatory Commission.

Darrell G. Eisenhut,

Director, Division of Licensing.

[FR Doc. 80-28177 Filed 9-11-80; 8:45 am]

BILLING CODE 7590-01-M

Clarification of TMI-2 Related Requirements; Meeting

AGENCY: U.S. Nuclear Regulatory Commission.

ACTION: Notice of meeting.

SUMMARY: As a result of the accident at TMI-2 in March 1979, the NRC has developed a number of new requirements for nuclear power plants. The staff has recently developed a document describing in more detail certain of these requirements that are being implemented at operating plants and plants under construction. In connection with this document, which clarifies and in some cases revises the scope and schedule of these requirements, the NRC will hold regional meetings to explain these requirements in more detail.

DATES AND LOCATIONS:

Region I September 22, 1980—8 a.m.–5 p.m., Twin Bridges Marriott, 333 Jefferson Davis Highway, Arlington, Virginia.

Region III September 23, 1980—8:30 a.m.–5 p.m.

Region IV & Region V September 24, 1980—8:30 a.m.–5 p.m.

Region II September 26, 1980—8:30 a.m.–5 p.m.

Specific locations will be provided in NRC regional press releases.

FOR FURTHER INFORMATION CONTACT: Jack W. Roe, Division of Licensing, U.S. Nuclear Regulatory Commission, Washington, D.C. 20555, (301) 492-8102.

SUPPLEMENTAL INFORMATION: The primary purpose of these meetings will be (1) to provide a more detailed explanation of these requirements including revisions; (2) explain the Regulatory approach and schedule to be taken in implementing the requirements; and (3) to obtain industry comments on these requirements including the implementation schedules.

Persons other than the NRC staff and Licensee Representatives may observe the proceedings but will be permitted to participate in the discussions only as time will allow.

Registration of attendees will be conducted prior to each meeting at the designated locations.

Comments on the document from interested persons would be welcome. Copies are being furnished to all local NRC Public Document Rooms and it is available for inspection at the Public Document Room in Washington, D.C. (1717 H Street, N.W.). Since many of the requirements have near-term implementation dates and the detailed clarifications must be available promptly to the nuclear industry any such comments must be received as soon as practicable. The document is scheduled for finalization in early October 1980.

Dated at Bethesda, Maryland, this the 7th day of September 1980.

For the Nuclear Regulatory Commission.

Darrell G. Eisenhut,

Director, Division of Licensing Office of Nuclear Reactor Regulation.

[FR Doc. 80-28173 Filed 9-11-80; 8:45 am]

BILLING CODE 7590-01-M

[Docket No. 50-249]

Commonwealth Edison Co. (Dresden Nuclear Power Station Unit 3); Order for Modification of License

I

The Commonwealth Edison Company (licensee) is the holder of Facility Operating License No. DPR-25 which authorizes the operation of the Dresden Nuclear Power Station Unit 3 at steady state reactor power levels not in excess of 2527 megawatts thermal (rated power). The facility consists of a boiling water reactor located at the licensee's site near Morris, Illinois.

II

On November 4, 1977, the Union of Concerned Scientists (UCS) filed with the Commission a "Petition for Emergency and Remedial relief." The petition sought action in two areas: fire protection for electrical cables, and environmental qualification of electircal components. By Memorandum and Order dated April 13, 1978 (7 NRC 400), the Commission denied certain aspects of the Petition and, with respect to other aspects, ordered the NRC staff to take several related actions. UCS filed a Petition for Reconsideration on May 2, 1978. By Memorandum and Order, dated May 23, 1980, the Commission reaffirmed its April 13, 1978 decision regarding the possible shutdown of operating reactors. However, the Commission's May 23, 1980 decision directed licensees and the NRC staff to undertake certain actions.

With respect to environmental qualification of safety-related electrical equipment, the Commission determined that the provisions of the two staff documents—the Division of Operating Reactors "Guidelines for Evaluating Environmental Qualification of Class 1E Electrical equipment in Operating Reactors" (DOR Guidelines) and NUREG-0588, "Interim Staff Position on Environmental Qualification of Safety-Related Electrical Equipment," December 1979 "Form the requirements which licensees and applicants must meet in order ot satisfy those aspects of 10 CFR part 50, Appendix A General Design Criterion (GDC-4), which related to environmental qualification of safety-related electrical equipment." The Commission directed, for replacement parts in operating plants, "unless there are sound reasons to the contrary, the 1974 standard in NUREG-0588 will apply." The Commission also directed the staff to complete its review of the information sought for licensees by Bulletin 79-01B[1] and to complete its review of environmental qualification of safety-related electrical equipment in all operating plants, including the publication of Safety Evaluation Reports, by February 1, 1981. The Commission imposed a deadline that, "by no later than June 30, 1982 all safety-related electrical equipment in all operating plants shall be qualified to the DOR guidelines or NUREG-0588." The Commission requested the staff to, "keep the Commission and the public apprised of any further findings of incomplete environmental qualification of safety-related electrical equipment, along with corrective actions taken or planned," and requested the staff to provide bi-monthly progress reports to the Commission.

The Commission further directed the staff to add certain documentation requirements to each license after the specific requirements were approved by

[1] Bulletin 79-01B was not sent to licensees for plants under review as part of the staff's Systematic Evaluation Program. The information sought by Bulletin 79-01B was requested from these licensees by a series of letters and meetings during the months of February and March, 1980.

the Commission. The Commission also pointed out that the various deadlines impossed in its Order, "do not excuse a licensee from the obligation to modify or replace inadequate equipment promptly."

III

The information developed during this proceeding emphasizes the importance of adequate documentation, the prompt completion of the reveiw of environmental qualification of safety-related electrical equipment, and the prompt completion of any plant modification needed to assure conformance with the DOR Guidelines or NUREG–0588. A significant aspect of this review is the timely submittal of environmental qualification information by the operating plant licensees to enable the staff to complete its review in accordance with the Commission's Order. The staff has a program presently underway to reevaluate, using the DOR guidelines and NUREG-0588, the qualifications of safety-related electrical equipment exposed to environments that may exist following postulated accidents. These accidents are Loss of Coolant Accident and Main Steam Line Break inside containment, and High Energy Line Breaks inside and outside containment.

In this connection the licensee was requested by I&E Bulletin 79–01B of January 14, 1980 to provide a detailed review of the environmental qualification of Class 1E electrical equipment. This review was to include all equipment required to function under postulated accident conditions, both inside and outside the primary containment, and recognize all conditions specified in the bulletin. Evidence of qualification together with methods and justification, was requested.

Clarification was provided by supplemental information, briefing, and in some cases, meetings with the licensee. Timely completion of the staff's reviews of environmental qualification of electrical equipment and timely completion of needed modifications by the licensee is required to provide continuing reasonable assurance of public health and safety. Such completion is dependent on the prompt receipt of a complete response by the licensee to the staff's requests for information. However, the licensee's response, to date, is incomplete.

Therefore, I have concluded that the public health, safety, and interest require that a firm schedule for the timely submission of all the information previously requested by the staff should be established by Order effective immediately.

IV

Accordingly, pursuant to the Atomic Energy Act of 1954, a amended, and the Commission's regulations in 10 CFR Parts 2 and 50, it is ordered that effective immediately Facility Operating License No. DPR–25 is hereby amended to add the following provisions:

"Information which fully and completely responds to the staff's request as specified above, shall be submitted to the Director, Division of Licensing by the licensee not later that November 1, 1980."

An earlier response is encouraged to facilitate staff review and issuance of the safety evaluation report. The licensee or any person whose interest may be affected by this Order may request a hearing within 20 days of the date of this Order. Any request for a hearing will not stay the effective date of this Order. Any request for a hearing shall be addressed to the Director, Office of Nuclear Reactor Regulation, U.S. Nuclear Regulatory Commission, Washington, D.C. 20555. A copy of the request should also be sent to the Executive Legal Director, U.S. Nuclear Regulatory Commission, Washington, D.C. 20555, and to John W. Rowe, Isham, Lincoln & Beale, Counselors at Law, One First National Plaza, 42nd Floor, Chicago, Illinois 60603, attorney for the licensee.

If a hearing is held concerning this Order, the issue to be considered at the hearing shall be whether the licenses should be modified to require submission of information as set forth in Section IV of the Order.

Operating of the facilities on terms consistent with this Order is not stayed by the pendency of any proceedings on the Order.

Effective Date: August 29, 1980, Bethesda, Maryland.

For the Nuclear Regulatory Commission.

Darrell G. Eisenhut,

Director, Division of Licensing.

[FR Doc. 80-28174 Filed 9-11-80; 8:45 am]

BILLING CODE 7590-01-M

[Docket Nos. 50-254 and 50-265]

Commonwealth Edison Co. and Iowa-Illinois Gas & Electric Co. (Quad Cities Nuclear Power Station, Units 1 and 2); Order for Modification of Licenses

I

The Commonwealth Edison Company, et al (the licensee) is the holder of Facility Operating License Nos. DPR–29 and DPR–30 which authorize the operation of the Quad Cities Nuclear Power Station, Units 1 and 2 at steady state reactor power levels each not in excess of 2511 megawatts thermal (rated power). The facilities consist of boiling water reactors located at the licensee's site near Cardova, Illinois.

II

On November 4, 1977, the Union of Concerned Scientists (UCS) filed with the Commission a "Petition for Emergency and Remedial Relief." The petition sought action in two areas: fire protection for electrical cables, and environmental qualification of electrical components. By Memorandum and Order dated April 13, 1978 (7 NRC 400), the Commission denied certain aspects of the petition and, with respect to other aspects, ordered the NRC staff to take several related actions. UCS filed a Petition for Reconsideration on May 2, 1978. By Memorandum and Order, dated May 23, 1980, the Commission reaffirmed its April 13, 1978 decision regarding the possible shutdown of operating reactors. However, the Commission's May 23, 1980 decision directed licensees and the NRC staff to undertake certain actions.

With respect to enviromental qualification of safety-related electrical equipment, the Commission determined that the provisions of the two staff documents—the Division of Operating Reactors "Guidelines for Evaluating Environmental Qualification of Class IE Electrical Equipment in Operating Reactors" (DOR Guidelines) and NUREG–0588, "Interim Staff Position on Environmental Qualification of Safety-Related Electrical Equipment," December 1979 "form the requirments which licensees and applicants must meet in order to satisfy those aspects of 10 CFR Part 50, Appendix A General Design Criterion (GDC–4), which relate to environmental qualification of safety-related electrical equipment." The Commission directed, for replacement parts in operating plants, "unless there are sound reasons to the contrary, the 1974 standard in NUREG–0588 will apply." The Commission also directed the staff to complete its review of the information sought from licensees by Bulletin 79–01B [1] and to complete its review of environmental qualification of safety-related electrical equipment in all operating plants, including the publication of Safety Evaluation Reports, by February 1, 1981. The Commission imposed a deadline that,

[1] Bulletin 79–01B was not sent to licensees for plants under review as part of the staff's Systematic Evaluation Program. The information sought by Bulletin 79–01B was requested from these licensees by a series of letters and meetings during the months of February and March, 1980.

"by no later than June 30, 1982 all safety-related electrical equipment in all operating plants shall be qualified to the DOR Guidelines or NUREG–0588." The Commission requested the staff to, "keep the Commission and the public apprised of any further findings of incomplete enviromental qualification of safety-related electrical equipment, along with corrective actions taken or planned," and requested the staff to provide bi-monthly progress reports to the Commission.

The Commission further directed the staff to add certain documentation requirements to each license after the specific requirements were approved by the Commission. The Commission also pointed out that the various deadlines imposed in its Order, "do not excuse a licensee from the obligation to modify or replace inadequate equipment promptly."

III

The information developed during this proceeding emphasizes the importance of adequate documentation, the prompt completion of the review of environmental qualification of safety-related electrical equipment, and the prompt completion of any plant modification needed to assure conformance with the DOR Guidelines or NUREG–0588. A significant aspect of this review is the timely submittal of environmental qualification information by the operating plant licensees to enable the staff to complete its review in accordance with the Commission's Order. The staff has a program presently underway to reevaluate, using the DOR Guidelines and NUREG–0588, the qualifications of safety-related electrical equipment exposed to environments that may exist following postulated accidents. These accidents are Loss of Coolant Accident and Main Steam Line Break inside containment, and High Energy Line Breaks inside and outside containment.

In this connection the licensee was requested by I&E Bulletin 79–01B of January 14, 1980 to provide a detailed review of the environmental qualification of Class 1E electrical equipment. This review was to include all equipment required to function under postulated accident conditions, both inside and outside the primary containment, and recognize all conditions specified in the bulletin. Evidence of qualification together with methods and justification, was requested.

Clarification was provided by supplemental information, briefings, and in some cases, meetings with the licensee. Timely completion of the staff's review of environmental qualification of electrical equipment and timely completion of needed modifications by the licensee is required to provide continuing reasonable assurance of public health and safety. Such completion is dependent of the prompt receipt of a complete response by the licensee to the staff's requests for information. However, the licensee's response, to date, is incomplete.

Therefore, I have concluded that the public health, safety, and interest require that a firm schedule for the timely submission of all the information previously requested by the staff should be established by Order effective immediately.

Accordingly, pursuant to the Atomic Energy Act of 1954, as amended, and the Commission's regulations in 10 CFR Parts 2 and 50, it is ordered that effective immediately Facility Operating License Nos. DPR–29 and DPR–30 are hereby amended to add the following provisions:

"Information which fully and completely reponds to the staff's request as specified above, shall be submitted to the Director, Division of Licensing by the licensee not later than November 1, 1980."

An earlier response is encouraged to facilitate staff review and issuance of the safety evaluation report. The licensee or any person whose interest may be affected by this Order may request a hearing within 20 days of the date of this Order. Any request for a hearing will not stay the effective date of this Order. Any request for a hearing shall be addressed to the Director, Office of Nuclear Reactor Regulation, U.S. Nuclear Regulatory Commission, Washington, D.C. 20555. A copy of the request should also be sent to the Executive Legal Director, U.S. Nuclear Regulatory Commission, Washington, D.C. 20555, and to John W. Row, Isham, Lincoln & Beale, Counselors at Law, One First National Plaza, 42nd Floor, Chicago, Illinois 60603, attorney for the licensee.

If a hearing is held concerning this Order, the issue to be considered at the hearing shall be whether the licenses should be modified to require submission of information as set forth in Section IV of the Order.

Operating of the facilities on terms consistent with this Order is not stayed by the pendency of any proceedings on the Order.

Effective Date: August 29, 1980, Bethesda, Maryland.

For the Nuclear Regulatory Commission.
Darrell G. Eisenhut,
Director, Division of Licensing.

[FR Doc. 80-28172 Filed 9-11-80; 8:45 am]
BILLING CODE 7590-01-M

[Docket No. 50-247]

Consolidated Edison Co. of New York, Inc.; Issuance of Amendment to Facility Operating License

The U.S. Nuclear Regulatory Commission (the Commission) has issued Amendment No. 62 to Facility Operating License No. DPR–26, issued to the Consolidated Edison Company of New York, Inc. (the licensee), which revised Technical Specifications for operation of the Indian Point Nuclear Generating Unit No. 2 (the facility) located in Buchanan, Westchester County, New York. The amendment is effective as of the date of issuance.

The amendment reduces the number of hydraulic snubers required by the Technical Specifications, reflecting redesign of the support systems of certain safety-related pipe lines.

The application for the amendment complies with the standards and requirements of the Atomic Energy Act of 1954, as amended (the Act), and the Commission's rules and regulations. The Commission has made appropriate findings as required by the Act and the Commission's rules and regulations in 10 CFR Chapter I, which are set forth in the license amendment. Prior public notice of this amendment was not required since the amendment does not involve a significant hazards consideration.

The Commission has determined that the issuance of this amendment will not result in any significant environmental impact and that pursuant to 10 CFR 51.5(d)(4) an environmental impact statement or negative declaration and environmental impact appraisal need not be prepared in connection with issuance of this amendment.

For further details with respect to this action, see (1) the applications for amendment dated February 9, 1979 (supplemented by letters dated December 31, 1979 and June 23, 1980), (2) Amendment No. 62 to License No. DPR–26, and (3) the Commission's related Safety Evaluation. All of these items are available for public inspection at the Commission's Public Document Room, 1717 H Street, NW., Washington, D.C. and at the White Plains Public Library, 100 Martine Avenue, White Plains, New York. A copy of items (2) and (3) may be obtained upon request addressed to the U.S. Nuclear Regulatory Commission, Washington, D.C. 20555, Attention: Director, Division of Licensing.

Dated at Bethesda, Maryland, this 28th day of August 1980.

For the Nuclear Regulatory Commission.

Joseph D. Neighbors,

Acting Chief, Operating Reactors Branch No. 1, Division of Licensing.

[FR Doc. 80-28170 Filed 9-11-80; 8:45 am]

BILLING CODE 7590-01-M

[Dockets Nos. 50-269, 50-270 and 50-287]

Duke Power Co., Oconee Nuclear Station, Units Nos. 1, 2 and 3; Order for Modification of License

I

Duke Power Company (licensee) is the holder of Facility Operating Licenses Nos. DPR-38, DPR-47 and DPR-55 which authorize the operation of the Oconee Nuclear Station, Units Nos. 1, 2 and 3 at steady state reactor power levels not in excess of 2,568 megawatts thermal (rated power) for each unit. The facilities are pressurized water reactors located at the licensee's site in Oconee County, South Carolina.

II

On November 4, 1977, the Union of Concerned Scientists (UCS) filed with the Commission a "Petition for Emergency and Remedial Relief." The petition sought action in two areas: fire protection for electrical cables, and environmental qualification of electrical components. By Memorandum and Order dated April 13, 1978 (7 NRC 400), the Commission denied certain aspects of the petition and, with respect to other aspects, ordered the NRC staff to take several related actions. UCS filed a Petition for Reconsideration on May 2, 1978. By Memorandum and Order, dated May 23, 1980, the Commission reaffirmed its April 13, 1978 decision regarding the possible shutdown of operating reactors. However, the Commission's May 23, 1980 decision directed licensees and the NRC staff to undertake certain actions.

With respect to environmental qualification of safety-related electrical equipment, the Commission determined that the provisions of the two staff documents—the Division of Operating Reactors "Guidelines for Evaluating Environmental Qualification of Class 1E Electrical Equipment in Operating Reactors" (DOR Guidelines) and NUREG-0588, "Interim Staff Position on Environmental Qualification of Safety-Related Electrical Equipment," December 1979 "form the requirements which licensees and applicants must meet in order to satisfy those aspects of 10 CFR Part 50, Appendix A General Design Criterion (GDC-4), which relate to environmental qualification of safety-related electrical equipment." The Commission directed, for replacement parts in operating plants, "unless there are sound reasons to the contrary, the 1974 standard in NUREG-0588 will apply." The Commission also directed the staff to complete its review of the information sought from licensees by Bulletin 79-01B [1] and to complete its review of environmental qualification of safety-related electrical equipment in all operating plants, including the publication of Safety Evaluation Reports, by February 1, 1981. The Commission imposed a deadline that, "by no later than June 30, 1982 all safety-related electrical equipment in all operating plants shall be qualified to the DOR Guidelines or NUREG-0588." The Commission requested the staff to "keep the Commission and the public apprised of any further findings of incomplete environmental qualification of safety-related electrical equipment, along with corrective actions taken or planned," and requested the staff to provide bi-monthly progress reports to the Commission.

The Commission further directed the staff to add certain documentation requirements to each license after the specific requirements were approved by the Commission. The Commission also pointed out that the various deadlines imposed in its Order "do not excuse a licensee from the obligation to modify or replace inadequate equipment promptly."

III

The information developed during this proceeding emphasizes the importance of adequate documentation, the prompt completion of the review of environmental qualification of safety-related electrical equipment, and the prompt completion of any plant modification needed to assure conformance with the DOR Guidelines or NUREG-0588. A significant aspect of this review is the timely submittal of environmental qualification information by the operating plant licensees to enable the staff to complete its review in accordance with the Commission's Order. The staff has a program presently underway to reevaluate, using the DOR Guidelines and NUREG-0588, the qualification of safety-related electrical equipment exposed to environments that may exist following postulated accidents. These accidents are Loss of Coolant Accident and Main Steam Line Break inside containment, and High Energy Line Breaks inside and outside containment.

In this connection the licensee was requested by I&E Bulletin 79-01B of January 14, 1980, to provide a detailed review of the environmental qualification of Class 1E electrical equipment. This review was to include all equipment required to function under postulated accident conditions, both inside and outside the primary containment, and recognize all conditions specified in the bulletin. Evidence of qualification together with methods and justification was requested.

Clarification was provided by supplemental information, briefings, and in some cases, meetings with the licensee. Timely completion of the staff's review of environmental qualification of electrical equipment and timely completion of needed modifications by the licensee is required to provide continuing reasonable assurance of public health and safety. Such completion is dependent on the prompt receipt of a complete response by the licensee to the staff's requests for information. However, the licensee's response, to date, is incomplete.

Therefore, I have concluded that the public health, safety, and interest require that a firm schedule for the timely submission of all the information previously requested by the staff should be established by Order effective immediately.

IV

Accordingly, pursuant to the Atomic Energy Act of 1954, as amended, and the Commission's regulations in 10 CFR Parts 2 and 50, it is ordered that effective immediately Facility Operating Licenses Nos. DPR-38, DPR-47 and DPR-55 are hereby amended to add the following provisions:

"Information which fully and completely responds to the staff's request as specified above, shall be submitted to the Director, Division of Licensing by the licensee not later than November 1, 1980."

An earlier response is encouraged to facilitate staff review and issuance of the safety evaluation report. The licensee or any person whose interest may be affected by this Order may request a hearing within 20 days of the date of this Order. Any request for a hearing will not stay the effective date of this Order. Any request for a hearing shall be addressed to the Director, Office of Nuclear Reactor Regulation, U.S. Nuclear Regulatory Commission, Washington, D.C. 20555. A copy of the

---

[1] Bulletin 79-01B was not sent to licensees for plants under review as part of the staff's Systematic Evaluation Program. The information sought by Bulletin 79-01B was requested from these licensees by a series of letters and meetings during the months of February and March, 1980.

request should also be sent to the Executive Legal Director, U.S. Nuclear Regulatory Commission, Washington, D.C. 20555, and to William L. Porter, Duke Power Company, P.O. Box 2178, 422 South Church Street, Charlotte, North Carolina 28242, attorney for the licensee.

If a hearing is held concerning this Order, the issue to be considered at the hearing shall be whether the licenses should be modified to require submission of information as set forth in Section IV. of the Order.

Operating of the facilities on terms consistent with this Order is not stayed by the pendency of any proceedings on the Order.

Effective date: August 29, 1980, Bethesda, Maryland.

For the Nuclear Regulatory Commission.

Darrell G. Eisenhut,

Director, Division of Licensing.

[FR Doc. 80-28181 Filed 9-11-80; 8:45 am]

BILLING CODE 7590-01-M

[Docket No. 50-334]

Duquesne Light Co., et al.; Issuance of Amendment to Facility Operating License and Termination of Order for Modification of License

The U.S. Nuclear Regulatory Commission (the Commission) has issued Amendment No. 28 to Facility Operating License No. DPR-66 issued to Duquesne Light Company, Ohio Edison Company, and Pennsylvania Power Company (the licensees), which revised Technical Specifications for operation of the Beaver Valley Power Station, Unit No. 1 (the facility) located in Beaver County, Pennsylvania. The amendment is effective as of the date of issuance.

The amendment revises the Technical Specifications to reflect changes as a result of modifications made to alleviate Net Positive Suction Head (NPSH) problems with the Low Head Safety Injection and Recirculation Spray Pumps. This amendment also constitutes completion of actions required of the licensee by the "Order for Modification of license" dated September 30, 1977; that Order is therefore terminated.

The application for the amendment complies with the standards and requirements of the Atomic Energy Act of 1954, as amended (the Act), and the Commission's rules and regulations. The Commission has made appropriate findings as required by the Act and the Commission's rules and regulations in 10 CFR Chapter I, which are set forth in the license amendment. Notice of issuance of the Order for Modification of License was published in the Federal Register on October 25, 1977 (42 FR 56384).

The Commission has determined that the issuance of this amendment will not result in any significant environmental impact and that pursuant to 10 CFR 51.5(d)(4) an environmental impact statement or negative declaration and environmental impact appraisal need not be prepared in connection with issuance of this amendment.

For further details with respect to this action, see (1) the application for amendment dated November 17, 1977, May 16, August 3, September 11 and October 24, 1978, September 28 and October 18, 1979, February 27, July 3, August 6 and 11, 1980, (2) Amendment No. 28 to License No. DPR-66, (3) the Commission's related Safety Evaluation and (4) Order for Modification of License dated September 30, 1977. All of these items are available for public inspection at the Commission's Public Document Room, 1717 H Street, N.W., Washington, D.C. and at the B. F. Jones Memorial Library, 663 Franklin Avenue, Aliquippa, Pennsylvania 15001. A copy of items (2), (3) and (4) may be obtained upon request addressed to the U.S. Nuclear Regulatory Commission, Washington, D.C. 20555, Attention: Director, Division of Licensing.

Dated at Bethesda, Maryland, this 27th day of August 1980.

For the Nuclear Regulatory Commission.

Marshall Grotenhuis,

Acting Chief Operating Reactors Branch No. 1, Division of Licensing.

[FR Doc. 80-28166 Filed 9-11-80; 8:45 am]

BILLING CODE 7590-01-M

[Docket No. 50-302]

Florida Power Corp., et al., Crystal River Unit No. 3 Nuclear Generating Plant; Order for Modification of License

I

Florida Power Corporation (licensee) and eleven other co-owners are the holders of Facility Operating License No. DPR-72, which authorizes the operation of the Crystal River Unit No. 3 Nuclear Generating Plant at steady state reactor power levels not in excess of 2452 megawatts thermal (rated power). The facility consists of a pressurized water reactor located at the licensee's site in Citrus County, Florida.

II

On November 4, 1977, the Union of Concerned Scientists (UCS) filed with the Commission a "Petition for Emergency and Remedial Relief." The petition sought action in two areas: Fire protection for electrical cables, and environmental qualification of electrical components. By Memorandum and Order dated April 13, 1978 (7 NRC 400), the Commission denied certain aspects of the petition and, with respect to other aspects, ordered the NRC staff to take several related actions. UCS filed a Petition for Reconsideration on May 2, 1978. By Memorandum and Order, dated May 23, 1980, the Commission reaffirmed its April 13, 1978 decision regarding the possible shutdown of operating reactors. However, the Commission's May 23, 1980 decision directed licensees and the NRC Staff to undertake certain actions.

With respect to environmental qualification of safety-related electrical equipment, the Commission determined that the provisions of the two staff documents—the Division of Operating Reactors "Guidelines for Evaluating Environmental Qualification of Class 1E Electrical Equipment in Operating Reactors" (DOR Guidelines) and NUREG-0588, "Interim Staff Position on Environmental Qualification of Safety-Related Electrical Equipment," December 1979 "form the requirements which licensees and applicants must meet in order to satisfy those aspects of 10 CFR Part 50, Appendix A General Design Criterion (GDC-4), which relate to environmental qualification of safety-related electrical equipment." The Commission directed, for replacement parts in operating plants, "unless there are sound reasons to the contrary, the 1974 standard in NUREG-0588 will apply." The Commission also directed the staff to complete its review of the information sought from licensees by Bulletin 79-01B [1] and to complete its review of environmental qualification of safety-related electrical equipment in all operating plants, including the publication of Safety Evaluation Reports, by February 1, 1981. The Commission imposed a deadline that, "by no later than June 30, 1982 all safety-related electrical equipment in all operating plants shall be qualified to the DOR Guidelines or NUREG-0588." The Commission requested the staff to, "keep the Commission and the public apprised of any further findings of incomplete environmental qualification of safety-related electrical equipment, along with corrective actions taken or planned," and requested the staff to provide bi-monthly progress reports to the Commission.

[1] Bulletin 79-01B was not sent to licensees for plants under review as part of the staff's Systematic Evaluation Program. The information sought by Bulletin 79-01B was requested from these licensees by a series of letters and meetings during the months of February and March, 1980.

The Commission further directed the staff to add certain documentation requirements to each license after the specific requirements were approved by the Commission. The Commission also pointed out that the various deadlines imposed in its Order, "do not excuse a licensee from the obligation to modify or replace inadequate equipment promptly."

III

The information developed during this proceeding emphasizes the importance of adequate documentation, the prompt completion of the review of environmental qualification of safety-related electrical equipment, and the prompt completion of any plant modification needed to assure conformance with the DOR Guidelines or NUREG-0588. A significant aspect of this review is the timely submittal of environmental qualification information by the operating plant licensees to enable the staff to complete its review in accordance with the Commission's Order. The staff has a program presently underway to reevaluate, using the DOR Guidelines and NUREG-0588, the qualifications of safety-related electrical equipment exposed to environments that may exist following postulated accidents. These accidents are Loss of Coolant Accident and Main Steam Line Break inside containment, and High Energy Line Breaks inside and outside containment.

In this connection the licensee was requested by I&E Bulletin 79-01B of January 14, 1980, to provide a detailed review of the environmental qualification of Class 1E electrical equipment. This review was to include all equipment required to function under postulated accident conditions, both inside and outside the primary containment, and recognize all conditions specified in the bulletin. Evidence of qualification together with methods and justification, was requested.

Clarification was provided by supplemental information, briefings, and in some cases, meetings with the licensee. Timely completion of the staff's review of environmental qualification of electrical equipment and timely completion of needed modifications by the licensee is required to provide continuing reasonable assurance of public health and safety. Such completion is dependent on the prompt receipt of a complete response by the licensee to the staff's requests for information. However, the licensee's response, to date, is incomplete.

Therefore, I have concluded that the public health, safety, and interest require that a firm schedule for the timely submission of all the information previously requested by the staff should be established by Order effective immediately.

Accordingly, pursuant to the Atomic Energy Act of 1954, as amended, and the Commission's regulations in 10 CFR Parts 2 and 50, it is ordered that effective immediately Facility Operating License No. DPR-72 is hereby amended to add the following provisions:

"Information which fully and completely responds to the staff's request as specified above, shall be submitted to the Director, Division of Licensing by the licensee not later than November 1, 1980."

An earlier response is encouraged to facilitate staff review and issuance of the safety evaluation report. The licensee or any person whose interest may be affected by this Order may request a hearing within 20 days of the date of this Order. Any request for a hearing will not stay the effective date of this Order. Any request for a hearing shall be addressed to the Director, Office of Nuclear Reactor Regulation, U.S. Nuclear Regulatory Commission, Washington, D.C. 20555. A copy of the request should also be sent to the Executive Legal Director, U.S. Nuclear Regulatory Commission, Washington, D.C. 20555, and to S. A. Brandimore, Vice President and General Counsel, P.O. Box 14942, St. Petersburg, Florida 33733, attorney for the licensee.

If a hearing is held concerning this Order, the issue to be considered at the hearing shall be whether the license should be modified to require submission of information as set forth in Section IV. of the Order.

Operating of the facility on terms consistent with this Order is not stayed by the pendency of any proceedings on the Order.

Effective date: August 29, 1980, Bethesda, Maryland.

For the Nuclear Regulatory Commission.

Darrell G. Eisenhut,

Director, Division of Licensing.

[FR Doc. 80-28180 Filed 9-11-80; 8:45 am]

BILLING CODE 7590-01-M

[Docket No. 50-331]

Iowa Electric Light & Power Co., Central Iowa Power Cooperative, and Corn Belt Power Cooperative (Duane Arnold Energy Center); Order for Modification of License

I

Iowa Electric Light & Power Company, Central Iowa Power Cooperative, and Corn Belt Power Cooperative (licensee) is the holder of Facility Operating License No. DPR-49 which authorizes the operation of the Duane Arnold Energy Center at steady state reactor power levels not in excess of 1653 megawatts thermal (rated power). The facility consists of a boiling water reactor located at the licensee's site near Palo in Linn County, Iowa.

II

On November 4, 1977, the Union of Concerned Scientists (UCS) filed with the Commission a "Petition for Emergency and Remedial Relief." The petition sought action in two areas: fire protection for electrical cables, and environmental qualification of electrical components. By Memorandum and Order dated April 13, 1978 (7 NRC 400), the Commission denied certain aspects of the petition and, with respect to other aspects, ordered the NRC staff to take several related actions. UCS filed a Petition for Reconsideration on May 2, 1978. By Memorandum and Order, dated May 23, 1980, the Commission reaffirmed its April 13, 1978 decision regarding the possible shutdown of operating reactors. However, the Commission's May 23, 1980 decision directed licensees and the NRC staff to undertake certain actions.

With respect to environmental qualification of safety-related electrical equipment, the Commission determined that the provisions of the two staff documents—the Division of Operating Reactors "Guidelines for Evaluating Environmental Qualification of Class 1E Electrical Equipment in Operating Reactors" (DOR Guidelines) and NUREG-0588, "Interim Staff Position on Environmental Qualification of Safety-Related Electrical Equipment," December 1979 "form the requirements which licensees and applicants must meet in order to satisfy those aspects of 10 CFR Part 50, Appendix A General Design Criterion (GDC-4), which relate to environmental qualification of safety-related electrical equipment." The Commission directed, for replacement parts in operating plants, "unless there are sound reasons to the contrary, the 1974 standard in NUREG-0588 will apply." The Commission also directed the staff to complete its review of the information sought from licensees by Bulletin 79-01B [1] and to complete its review of environmental qualification of safety-related electrical equipment in all operating plants, including the

[1] Bulletin 79-01B was not sent to licensees for plants under review as part of the staff's Systematic Evaluation Program. The information sought by Bulletin 79-01B was requested from these licensees by a series of letters and meetings during the months of February and March, 1980.

publication of Safety Evaluation Reports, by February 1, 1981. The Commission imposed a deadline that, "by no later than June 30, 1982 all safety-related electrical equipment in all operating plants shall be qualified to the DOR Guidelines or NUREG-0588." The Commission requested the staff to, "keep the Commission and the public apprised of any further findings of incomplete environmental qualification of safety-related electrical equipment, along with corrective actions taken or planned," and requested the staff to provide bi-monthly progress reports to the Commission.

The Commission further directed the staff to add certain documentation requirements to each license after the specific requirements were approved by the Commission. The Commission also pointed out that the various deadlines imposed in its Order, "do not excuse a licensee from the obligation to modify or replace inadequate equipment promptly."

III

The information developed during this proceeding emphasizes the importance of adequate documentation, the prompt completion of the review of environmental qualification of safety-related electrical equipment, and the prompt completion of any plant modification needed to assure conformance with the DOR Guidelines or NUREG-0588. A significant aspect of this review is the timely submittal of environmental qualification information by the operating plant licensees to enable the staff to complete its review in accordance with the Commission's Order. The staff has a program presently underway to reevaluate, using the DOR Guidelines and NUREG-0538, the qualifications of safety-related electrical equipment exposed to environments that may exist following postulated accidents. These accidents are Loss of Coolant Accident and Main Steam Line Break inside containment, and High Energy Line Breaks inside and outside containment.

In this connection the licensee was requested by I&E Bulletin 79-01B of January 14, 1980 to provide a detailed review of the environmental qualification of Class 1E electrical equipment. This review was to include all equipment required to function under postulated accident conditions, both inside and outside the primary containment, and recognize all conditions specified in the bulletin. Evidence of qualification together with methods and justification, was requested.

Clarification was provided by supplemental information, briefings, and in some cases, meetings with the licensee. Timely completion of the staff's review of environmental qualification of electrical equipment and timely completion of needed modifications by the licensee is required to provide continuing reasonable assurance of public health and safety. Such completion is dependent on the prompt receipt of a complete response by the licensee to the staff's requests for information. However, the licensee's response, to date, is incomplete.

Therefore, I have concluded that the public health, safety, and interest require that a firm schedule for the timely submission of all the information previously requested by the staff should be established by Order effective immediately.

Accordingly, pursuant to the Atomic Energy Act of 1954, as amended, and the Commission's regulations in 10 CFR Parts 2 and 50, it is ordered that effective immediately Facility Operating License No. DPR-49 is hereby amended to add the following provisions:

Information which fully and completely responds to the staff's request as specified above, shall be submitted to the Director, Division of Licensing by the licensee not later that November 1, 1980.

An earlier response is encouraged to facilitate staff review and issuance of the safety evaluation report. The licensee or any person whose interest may be affected by this Order may request a hearing within 20 days of the date of this Order. Any request for a hearing will not stay the effective date of this Order. Any request for a hearing shall be addressed to the Director, Office of Nuclear Reactor Regulation, U.S. Nuclear Regulatory Commission, Washington, D.C. 20555. A copy of the request should also be sent to the Executive Legal Director, U.S. Nuclear Regulatory Commission, Washington, D.C. 20555, and to Robert Lowenstein, Esquire, Harold F. Reis, Esquire, Lowenstein, Newman, Reis, and Axelrad, 1025 Connecticut Avenue, N.W., Washington, D.C. 20036, attorney for the licensee.

If a hearing is held concerning this Order, the issue to be considered at the hearing shall be whether the license should be modified to require submission of information as set forth in Section IV of the Order.

Operating of the facilities on terms consistent with this Order is not stayed by the pendency of any proceedings on the Order.

Effective Date: August 29, 1980, Bethesda, Maryland.

For the Nuclear Regulatory Commission.

Darrell G. Eisenhut,

Director Division of Licensing.

[FR Doc. 80-28175 Filed 9-11-80; 8:45 am]
BILLING CODE 7590-01-M

[Docket No. 50-289]

Metropolitan Edison Co., et al.; Issuance of Amendment to Facility Operating License

The U.S. Nuclear Regulatory Commission (the Commission) has issued Amendment No. 57 to Facility Operating License No. DPR-50, issued to Metropolitan Edison Company, Jersey Central Power and Light Company and Pennsylvania Electric Company (the licensees), which revised Technical Specifications for operation of the Three Mile Island Nuclear Station, Unit No. 1 (the facility) located in Dauphin County, Pennsylvania. The amendment is effective as of its date of issuance.

The amendment revises the Technical Specifications for the facility to include surveillance requirements for High and Low Pressure Safety Injection Systems. These surveillance requirements will provide additional assurance that these systems will function as assumed in the ECCS analysis.

The application for the amendment complies with the standards and requirements of the Atomic Energy Act of 1954, as amended (the Act), and the Commission's rules and regulations. The Commission has made appropriate findings as required by the Act and the Commission's rules and regulations in 10 CFR Chapter I, which are set forth in the license amendment. Prior public notice of this amendment was not required since the amendment does not involve a significant hazards consideration.

The Commission has determined that the issuance of this amendment will not result in any significant environmental impact and that pursuant to 10 CFR 51.5(d)(4) an environmental impact statement, or negative declaration and environmental impact appraisal need not be prepared in connection with issuance of this amendment.

For further details with respect to this action, see (1) the application for amendment dated September 7, 1977, as revised October 21, 1977, March 31, 1980 and May 20, 1980, (2) Amendment No. 57 to License No. DPR-50, and (3) the Commission's related Safety Evaluation. All of these items are available for public inspection at the Commission's Public Document Room 1717 H Street, N.W., Washington, D.C. 20555, and at the Government Publications Section, State Library of Pennsylvania, Box 1601 (Education Building), Harrisburg,

Pennsylvania and at the York College of Pennsylvania, Country Club Road, York, Pennsylvania 17405. A copy of items (2) and (3) may be obtained upon request addressed to the U.S. Nuclear Regulatory Commission, Washington, D.C. 20555, Attention: Director, Division of Licensing.

Dated at Bethesda, Maryland, this 2nd day of September 1980.

For the Nuclear Regulatory Commission.

Robert W. Reid,

Chief, Operating Reactors Branch No. 4, Division of Licensing.

[FR Doc. 80-28167 Filed 9-11-80; 8:45 am]

BILLING CODE 7590-01-M

[Dockets Nos. 50-282 and 50-306]

Northern States Power Co.; Issuance of Amendments to Facility Operating Licenses and Negative Declaration

The U.S. Nuclear Regulatory Commission (the Commission) has issued Amendment No. 42 to Facility Operating License No. DPR-42, and Amendment No. 36 to Facility Operating License No. DPR-60 issued to Northern States Power Company (the licensee), which revised Technical Specifications for operation of Prairie Island Nuclear Generating Plant, Units Nos. 1 and 2 (the facilities) located in Goodhue County, Minnesota. The amendments are effective as of the date of issuance.

The amendments permit the addition of a special chlorination program for the circulating water system which is necessary to destroy the parasitic amoeba discovered in this system.

The application for the amendments complies with the standards and requirements of the Atomic Energy Act of 1954, as amended (the Act), and the Commission's rules and regulations. The Commission has made appropriate findings as required by the Act and the Commission's rules and regulations in 10 CFR Chapter I, which are set forth in the license amendments. Prior public notice of these amendments was not required since the amendments do not involve a significant hazards consideration.

The Commission has prepared an Environmental Impact Appraisal for the revised Technical Specifications and has concluded that an environmental impact statement for this particular action is not warranted because there will be no environmental impact attributable to the action other than that which has already been predicted and described in the Commission's Final Environmental Statement for the facility dated May 1973.

For further details with respect to this action, see (1) the application for amendments dated August 21, 1980, (2) Amendments Nos. 42 and 36 to Licenses Nos. DPR-42 and DPR-60, and (3) the Commission's related Environmental Impact Appraisal. All of these items are available for public inspection at the Commission's Public Document Room, 1717 H Street, N.W., Washington, D.C. and at the Environmental Conservation Library, 300 Nicollet Mall, Minneapolis, Minnesota 55401. A copy of items (2) and (3) may be obtained upon request addressed to the U.S. Nuclear Regulatory Commission, Washington, D.C. 20555, Attention: Director, Division of Licensing.

Dated at Bethesda, Maryland, this 27th day of August 1980.

For the Nuclear Regulatory Commission.

Robert A. Clark,

Chief, Operating Reactors Branch No. 3, Division of Licensing.

[FR Doc. 80-28168 Filed 9-11-80; 8:45 am]

BILLING CODE 7590-01-M

[Docket No. 50-285]

Omaha Public Power District; Issuance of Amendment to Facility Operating License and Negative Declaration

The U.S. Nuclear Regulatory Commission (the Commission) has issued Amendment No. 51 to Facility Operating License No. DPR-40 issued to Omaha Public Power District (the licensee), which revised the Technical Specifications for operation of the Fort Calhoun Station, Unit No. 1 (the facility), located in Washington County, Nebraska. The amendment is to be effective as of the date on which the anticipated modifications to the NPDES permit become effective.

The amendment revises Appendix B of the Technical Specifications to delete certain environmental monitoring and reporting requirements and increases the maximum and differential condensor cooling water discharge temperature limits to correspond to the anticipated NPDES requirements.

The application for the amendment complies with the standards and requirements of the Atomic Energy Act of 1954, as amended (the Act), and the Commission's rules and regulations. The Commission has made appropriate findings as required by the Act and the Commission's rules and regulations in 10 CFR Chapter I, which are set forth in the license amendment. Prior public notice of this amendment was not required since the amendment does not involve a significant hazards consideration.

The Commission has prepared an environmental impact appraisal for this action and has concluded that an environmental impact statement is not warranted because there will be no environmental impact attributable to the action other than that which has already been predicted and described in the Commission's Final Environmental Statement for the facility dated August 1972.

For further details with respect to this action see (1) the application for amendment transmitted by letter dated February 6, 1979, (2) Amendment No. 51 to Operating License No. DPR-40; and (3) the Commission's Environmental Impact Appraisal, and the transmittal letter to the licensee dated All of these items are available for public inspection at the Commission's Public Document Room, 1717 H Street, NW., Washington, D.C. and at the W. Dale Clark Library, 215 South 15th Street, Omaha, Nebraska 68102. A copy of items (2) and (3) may be obtained upon request addressed to the U.S. Nuclear Regulatory Commission, Washington, D.C. 20555, Attention: Director, Division of Licensing.

Dated at Bethesda, Maryland this 28th day of August, 1980.

For the Nuclear Regulatory Commission.

Robert A. Clark,

Chief, Operating Reactors Branch No. 3, Division of Licensing.

[FR Doc. 80-28169 Filed 9-11-80; 8:45 am]

BILLING CODE 7590-01-M

[Docket No. 50-286]

Power Authority of the State of New York, (Indian Point Station, Unit No. 3); Order for Modification of License

I

The Power Authority of the State of New York (the licensee) is the holder of Operating License No. DPR-64, which authorizes the operation of the Indian Point, Unit No. 3 nuclear power plant at steady state reactor power levels not in excess of 3025 megawatts thermal (rated power). The facility consists of a pressurized water reactor located at the licensee's site in Westchester County, New York.

II

On November 4, 1977, the Union of Concerned Scientists (UCS) filed with the Commission a "Petition for Emergency and Remedial Relief." The petition sought action in two areas: fire protection for electrical cables, and environmental qualification of electrical components. By Memorandum and Order dated April 13, 1978 (7 NRC 400), the Commission ordered the NRC staff to take several related actions. UCS filed a Petition for Reconsideration on

May 2, 1978. By Memorandum and Order, dated May 23, 1980, the Commission reaffirmed its April 13, 1978 decision regarding the possible shutdown of operating reactors. However, the Commission's May 23, 1980 decision directed licensees and the NRC staff to undertake certain actions.

With respect to environmental qualification of safety-related electrical equipment, the Commission determined that the provisions of the two staff documents—the Division of Operating Reactors "Guidelines for Evaluating Environmental Qualification of Class 1E Electrical Equipment in Operating Reactors" (DOR Guidelines) and NUREG–0588, "Interim Staff Position on Environmental Qualification of Safety-Related Electrical Equipment," December 1979 "form the requirements which licensees and applicants must meet in order to satisfy those aspects of 10 CFR Part 50, Appendix A General Design Criterion (GDC–4), which relate to environmental qualification of safety-related electrical equipment." The Commission directed, for replacement parts in operating plants, "unless there are sound reasons to the contrary, the 1974 standard in NUREG–0588 will apply." The Commission also directed the staff to complete its review of the information sought from licensees by Bulletin 79–01B [1] and to complete its review of environmental qualification of safety-related electrical equipment in all operating plants, including the publication of Safety Evaluation Reports, by February 1, 1981. The Commission imposed a deadline that, "by no later than June 30, 1982 all safety-related electrical equipment in all operating plants shall be qualified to the DOR Guidelines or NUREG–0588." The Commission requested the staff to, "keep the Commission and the public apprised of any further findings of incomplete environmental qualification of safety-related electrical equipment, along with corrective actions taken or planned," and requested the staff to provide bi-monthly progress reports to the Commission.

The Commission further directed the staff to add certain documentation requirements to each license after the specific requirements were approved by the Commission. The Commission also pointed out that the various deadlines imposed in its Order, "do not excuse a licensee from the obligation to modify or replace inadequate equipment promptly."

[1] Bulletin 79–01B was not sent to licensees for plants under review as part of the staff's Systematic Evaluation Program. The information sought by Bulletin 79–01B was requested from these licensees by a series of letters and meetings during the months of February and March, 1980.

III

The information developed furing this proceeding emphasizes the importance of adequate documentation, the prompt completion of the review of environmental qualification of safety-related electrical equipment, and the prompt completion of any plant modification needed to assure conformance with the DOR Guidelines or NUREG–0588. A significant aspect of this review is the timely submittal of environmental qualification information by the operating plant licensees to enable the staff to complete its review in accordance with the Commission's Order. The staff has a program presently underway to reevaluate, using the DOR Guidelines and NUREG–0588, the qualifications of safety-related electrical equipment exposed to environments that may exist following postulated accidents. These accidents are Loss of Coolant Accident and Main Steam Line Break inside containment, and High Energy Line Breaks inside and outside containment.

In this connection the licensee was requested by our letter of March 5, 1980, as modified by our letter of March 20, 1980 to provide information on emergency procedures and safety related systems. The licensee was requested to define and provide the basis for the hostile environment, inside and outside containment. This hostile environment would then be used, by the licensee, in the determination of unqualified equipment. A complete package, including justification for methods used, was requested.

Clarification was provided by supplemental information, briefings, and in some cases, meetings with the licensee. Timely completion of the staff's review of environmental qualification of electical equipment and timely completion of needed modifications by the licensee is required to provide continuing reasonable assurance of public health and safety. Such completion is dependent on the prompt receipt of a complete response by the licensee to the staff's requests for information. However, the licensee's response, to date, is incomplete.

Therefore, I have concluded that the public health, safety, and interest require that a firm schedule for the timely submission of all the information previously requested by the staff should be established by Order effective immediately.

IV

Accordingly, pursuant to the Atomic Energy Act of 1954, as amended, and the Commission's regulations in 10 CFR Parts 2 and 50, it is ordered that effective immediately Facility Operating License No. DPR–64 is hereby amended to add the following provisions:

"Information which fully and completely responds to the staff's request as specified above, shall be submitted to the Director, Division of Licensing by the licensee not later than November 1, 1980."

An earlier response is encouraged to facilitate staff review and issuance of the Safety evaluation report. The licensee or any person whose interest may be affected by this Order may request a hearing within 20 days of the date of this Order. Any request for a hearing will not stay the effective date of this Order. Any request for a hearing shall be addressed to the Director, Office of Nuclear Reactor Regulation, U.S. Nuclear Regulatory Commission, Washington, D.C. 20555. A copy of the request should also be sent to the Executive Legal Director, U.S. Nuclear Regulatory Commission, Washington, D.C. 20555, and to Charles M. Pratt, Power Authority of the State of New York, 10 Columbus Circle, New York, New York 10019, attorney for the licensee.

If a hearing is held concerning this Order, the issue to be considered at the hearing shall be whether the license should be modified to require submission of information as set forth in Section IV of the Order.

Operating of the facility on terms consistent with this Order is not stayed by the pendency of any proceedings on the Order.

Effective date: August 29, 1980, Bethesda, Maryland.

For the Nuclear Regulatory Commission.

Darrell G. Eisenhut,

Director, Division of Licensing.

[FR Doc. 80–28183 Filed 9–11–80; 8:45 am]

BILLING CODE 7590–01–M

[Docket No. 50–333]

Power Authority of The State of New York, James A. FitzPatrick Nuclear Power Plant; Order for Modification of License

I

The Power Authority of the State of New York (licensee) is the holder of Facility Operating License No. DPR–59 which authorizes the operation of the James A. FitzPatrick Nuclear Power Plant at power levels up to 2436 megawatts thermal (rated power). The

facility consists of a boiling water reactor located at the licensee's site in Oswego County, New York.

II

On November 4, 1977, the Union of Concerned Scientists (UCS) filed with the Commission a "Petition for Emergency and Remedial Relief." The petition sought action in two areas: fire protection for electrical cables, and evironmental qualification of electrical components. By Memorandum and Order dated April 13, 1978 (7 NRC 400), the Commission denied certain aspects of the petition and, with respect to other aspects, ordered the NRC staff to take several related actions. USC filed a Petition for Reconsideration on May 2, 1978. By Memorandum and Order, dated May 23, 1980, the Commission reaffirmed its April 13, 1978 decision regarding the possible shutdown of operating reactors. However, the Commission's May 23, 1980 decision directed licensees and the NRC staff to undertake certain actions.

With respect to environmental qualification of safety-related electrical equipment, the Commission determined that the provisions of the two staff documents—the Division of Operating Reactors "Guidelines for Evaluating Environmental Qualification of Class 1E Electrical Equipment in Operating Reactors" (DOR Guidelines) and NUREG-0588, "Interim Staff Position on Environemental Qualification of Safety-Related Electrical Equipment," December 1979 "form the requirements which licensees and applicants must meet in order satisfy those aspects of 10 CFR Part 50, Appendix A General Design Criterion (GDC-4), which relate to environmental qualification of safety related electrical equipment." The Commission directed, for replacement parts in operating plants, "unless there are sound reasons to the contrary, the 1974 standard in NUREG-0588 will apply." The Commission also directed the staff to complete its review of the information sought from licensees by Bulletin 79-01B[1] and to complete its review of environmental qualification of safety-related electrical equipment in all operating plants, including the publication of Safety Evaluation Reports, by February 1, 1981. The Commission imposed a deadline that, "by no later than June 30, 1982 all safety-related electrical equipment in all operating plants shall be qualified to the DOR Guidelines or NUREG-0588." The Commission requested the staff to, "keep the Commission and the public apprised of any further findings of incomplete environmental qualification of safety-related electrical equipment, along with corrective actions taken or planned," and requested the staff to provide by-monthly progress reports to the Commission.

The Commission further directed the staff to add certain documentation requirements to each license after the specific requirements were approved by the Commission. The Commission also pointed out that the various deadlines imposed in its Order, "do not excuse a licensee from the obligation to modify or replace inadequately equipment promptly."

III

The information developed during this proceeding emphasizes the importance of adequate documentation, the prompt completion of the review of environmental qualification of safety-related electrical equipment, and the prompt completion of any plant modification needed to assure conformance with the DOR Guideline or NUREG-0588. A significant aspect of this review is the timely submittal of environmental qualification information by the operating plant licensees to enable the staff to complete its review in accordance with the Commission's Order. The staff has a program presently underway to reevaluate, using the DOR Guidelines and NUREG-0588, the qualifications of safety-related electrical equipment exposed to environments that may exist following postulated accidents. These accidents are Loss of Coolant Accident and Main Steam Line Break inside containment, and High Energy Line Breaks inside and outside containment.

In this connection the licensee was requested by I&E Bulletin 79-01B of January 14, 1980 to provide a detailed review of the environmental qualification of Class 1E electrical equipment. This review was to include all equipment required to function under postulated accident conditions, both inside and outside the primary containment, and recognize all conditions specified in the bulletin. Evidence of qualification together with methods and justification, was requested.

Clarification was provided by supplemental information, briefings, and in some cases, meetings with the licensee. Timely completion of the staff's review of environmental qualification of electrical equipment and timely completion of needed modifications by the licensee is required to provide continuing reasonable assurance of public health and safety. Such completion is dependent on the prompt receipt of a complete response by the licensee to the staff's requests for information. However, the licensee's response, to date, is incomplete.

Therefore, I have concluded that the public health, safety, and interest require that a firm schedule for the timely submission of all the information previously requested by the staff should be established by Order effective immediately.

Accordingly, pursuant to the Atomic Energy Act of 1954, as amended, and the Commission's regulations in 10 CFR Parts 2 and 50, it is ordered that effective immediately Facility Operating License No. DPR-59 is hereby amended to add the following provisions:

"Information which fully and completely responds to the staff's request as specified above, shall be submitted to the Director, Division of Licensing by the licensee not later than November 1, 1980."

An earlier response is encouraged to facilitate staff review and issuance of the safety evaluation report. The licensee or any person whose interest may be affected by this Order may request a hearing within 20 days of the date of this Order. Any request for a hearing will not stay the effective date of this Order. Any request for a hearing shall be addressed to the Director, Office of Nuclear Reactor Regulation, U.S. Nuclear Regulatory Commission, Washington, D.C. 20555. A copy of the request should also be sent to the Executive Legal Director, U.S. Nuclear Regulatory Commission, Washington, D.C. 20555, and to Charles M. Pratt, Assistant General Counsel, Power Authority of the State of New York, 10 Columbus Circle, New York, New York 10019, attorney for the licensee.

If a hearing is held concerning this Order, the issue to be considered at the hearing shall be whether the license should be modified to require submission of information as set forth in Section IV of the Order.

Operating of the facility on terms consistent with this Order is not stayed by the pendency of any proceedings on the Order.

Effective Date: August 29, 1980, Bethesda, Maryland.

For the Nuclear Regulatory Commission.

Darrell G. Eisenhut,

Director, Division of Licensing.

[FR Doc. 80-28171 Filed 9-11-80; 8:45 am]

BILLING CODE 7590-01-M

[1] Bulletin 79-01B was not sent to licensees for plants under review as part of the staff's Systematic Evaluation Program. The information sought by Bullet in 79-01B was requested from these licensees by a series of letters and meetings during the months of February and March, 1980.

[Docket Nos. STN 50-546 & STN 50-547]

Public Service Company of Indiana, Inc. et al., Marble Hill Nuclear Generating Station, Units 1 & 2; Issuance of Director's Decision Under 10 CFR 2.206

On August 11, 1980, notice was published in the Federal Register that the Commission had referred a document filed by Save the Valley (and docketed on May 14, 1980) to the NRC Staff for consideration under 10 CFR 2.206 of the Commission's regulations. In its filing, and in another document docketed on May 7, 1980, which is incorporated by reference, Save the Valley requested that the Commission consider certain information concerning construction problems at Marble Hill to assure the NRC has confidence that the licensees' quality assurance and control program is properly rehabilitated. In addition, Save the Valley requested that the Commission consider whether further study of certain seismic-related issues should be made.

Save the Valley's seismic-related issues have been considered by the Office of Nuclear Reactor Regulation. Upon review of Save the Valley's allegations, I have determined that further action on these issues is not necessary at this time. Accordingly, Save the Valley's request with respect to these issues is denied. The remaining issues raised in Save the Valley's filing are under consideration by the Office of Inspection and Enforcement.

A copy of the decision in this matter is available for public inspection in the Commission's Public Document Room at 1717 H Street, N.W., Washington, D.C. 20555, and in the local public document room at the Madison-Jefferson County Public Library, 420 West Main Street, Madison, Indiana 47250. A copy will also be filed with the Secretary for the Commission's review in accordance with 10 CFR 2.206(c). As provided in 10 CFR 2.206(c), this decision will constitute the final action of the Commission twenty (20) days after issuance, unless the Commission on its own motion elects to review this decision within this time.

Dated at Bethesda, Maryland this 2nd day of September, 1980.

For the Nuclear Regulatory Commission.

Harold R. Denton,

Director, Office of Nuclear Reactor Regulation.

[FR Doc. 80-28165 Filed 9-11-80; 8:45 am]

BILLING CODE 7590-01-M

[Docket No. 50-312]

Sacramento Municipal Utility District, Rancho Seco Nuclear Generating Station; Order for Modification of License

I

The Sacramento Municipal Utility District (the licensee) is the holder of Facility Operating License No. DPR-54, which authorizes the operation of the Rancho Seco Nuclear Generating Station at steady state reactor power levels not in excess of 2772 megawatts thermal (rated power). The facility consists of a pressurized water reactor located at the licensee's site in Sacramento County, California.

II

On November 4, 1977, the Union of Concerned Scientists (UCS) filed with the Commission a "Petition for Emergency and Remedial Relief." The petition sought action in two areas: Fire protection for electrical cables, and environmental qualification of electrical components. By Memorandum and Order dated April 13, 1978 (7 NRC 400), the Commission denied certain aspects of the petition and, with respect to other aspects, ordered the NRC staff to take several related actions. UCS filed a Petition for Reconsideration on May 2, 1978. By Memorandum and Order, dated May 23, 1980, the Commission reaffirmed its April 13, 1978 decision regarding the possible shutdown of operating reactors. However, the Commission's May 23, 1980 decision directed licensees and the NRC staff to undertake certain actions.

With respect to environmental qualification of safety-related electrical equipment, the Commission determined that the provisions of the two staff documents—the Division of Operating Reactors "Guidelines for Evaluating Environmental Qualification of Class 1E Electrical Equipment in Operating Reactors" (DOR Guidelines) and NUREG-0588, "Interim Staff Position on Environmental Qualification of Safety-Related Electrical Equipment," December 1979 "form the requirements which licensees and applicants must meet in order to satisfy those aspects of 10 CFR Part 50, Appendix A General Design Criterion (GDC-4), which relate to environmental qualification of safety-related electrical equipment." The Commission directed, for replacement parts in operating plants, "unless there are sound reasons to the contrary, the 1974 standard in NUREG-0588 will apply." The Commission also directed the staff to complete its review of the information sought from licensees by Bulletin 79-01B [1] and to complete its review of environmental qualification of safety-related electrical equipment in all operating plants, including the publication of Safety Evaluation Reports, by February 1, 1981. The Commission imposed a deadline that, "by no later than June 30, 1982 all safety-related electrical equipment in all operating plants shall be qualified to the DOR Guidelines or NUREG-0588." The Commission requested the staff to, "keep the Commission and the public apprised of any further findings of incomplete environmental qualification of safety-related electrical equipment, along with corrective actions taken or planned," and requested the staff to provide bi-monthly progress reports to the Commission.

The Commission further directed the staff to add certain documentation requirements to each license after the specific reqirements were approved by the Commission. The Commission also pointed out that the various deadlines imposed in its Order, "do not excuse a licensee from the obligation to modify or replace inadequate equipment promptly."

III

The information developed during this proceeding emphasizes the importance of adequate documentation, the prompt completion of the review of environmental qualification of safety-related electrical equipment, and the prompt completion of any plant modification needed to assure conformance with the DOR Guidelines or NUREG-0588. A significant aspect of this review is the timely submittal of environmental qualification information by the operating plant licensees to enable the staff to complete its review in accordance with the Commission's Order. The staff has a program presently underway to reevaluate, using the DOR Guidelines and NUREG-0588, the qualifications of safety-related electrical equipment exposed to environments that may exist following postulated accidents. These accidents are Loss of Coolant Accident and Main Steam Line Break inside containment, and High Energy Line Breaks inside and outside containment.

In this connection the licensee was requested by I&E Bulletin 79-01B of January 14, 1980, to provide a detailed review of the environmental qualification of Class 1E electrical

[1] Bulletin 79-01B was not sent to licensees for plants under review as part of the staff's Systematic Evaluation Program. The information sought by Bulletin 79-01B was requested from these licensees by a series of letters and meetings during the months of February and March, 1980.

equipment. This review was to include all equipment required to function under postulated accident conditions, both inside and outside the primary containment, and recognize all conditions specified in the bulletin. Evidence of qualification together with methods and justification, was requested.

Clarification was provided by supplemental information, briefings, and in some cases, meetings with the licensee. Timely completion of the staff's review of environmental qualification of electrical equipment and timely completion of needed modifications by the licensee is required to provide continuing reasonable assurance of public health and safety. Such completion is dependent on the prompt receipt of a complete response by the licensee to the staff's requests for information. However, the licensee's response, to date, is incomplete.

Therefore, I have concluded that the public health, safety, and interest require that a firm schedule for the timely submission of all the information previously requested by the staff should be established by Order effective immediately.

IV

Accordingly, pursuant to the Atomic Energy Act of 1954, as amended, and the Commission's regulations in 10 CFR Parts 2 and 50, it is ordered that effective immediately Facility Operating License No. DPR-54 is hereby amended to add the following provisions:

"Information which fully and completely responds to the staff's request as specified above, shall be submitted to the Director, Division of Licensing, by the licensee not later than November 1, 1980."

An earlier response is encouraged to facilitate staff review and issuance of the safety evaluation report. The licensee or any person whose interest may be affected by this Order may request a hearing within 20 days of the date of this Order. Any request for a hearing will not stay the effective date of this Order. Any request for a hearing shall be addressed to the Director, Office of Nuclear Reactor Regulation, U.S. Nuclear Regulatory Commission, Washington, D.C. 20555. A copy of the request should also be sent to the Executive Legal Director, U.S. Nuclear Regulatory Commission, Washington, D.C. 20555, and to David S. Kaplan, Secretary and General Counsel, 6201 S Street, P.O. Box 15830, Sacramento, California 95814, attorney for the licensee.

If a hearing is held concerning this Order, the issue to be considered at the hearing shall be whether the license should be modified to require submission of information as set forth in Section IV of the Order.

Operating of the facility on terms consistent with this Order is not stayed by the pendency of any proceedings on the Order.

Effective date: August 29, 1980, Bethesda, Maryland.

For the Nuclear Regulatory Commission.

Darrell G. Eisenhut,

Director, Division of Licensing.

[FR Doc. 80-28182 Filed 9-11-80; 8:45 am]
BILLING CODE 7590-01-M

[Docket Nos. 50-259, 50-260, 50-296]

Tennessee Valley Authority, Browns Ferry Nuclear Plant, Units 1, 2, and 3; Order for Modification of Licenses

I. The Tennessee Valley Authority (licensee) is the holder of Facility Operating License Nos. DPR-33, DPR-52, and DPR-68 which authorize the operation of the Browns Ferry Nuclear Plant, Units 1, 2, and 3 at steady state reactor power levels each not in excess of 3293 megawatts thermal (rated power). The facilities consist of boiling water reactors located at the licensee's site in Limestone County, Alabama.

II. On November 4, 1977, the Union of Concerned Scientists (USC) filed with the Commission a "Petition for Emergency and Remedial Relief." The petition sought action in two areas: fire protection for electrical cables, and environmental qualification of electrical components. By Memorandum and Order dated April 13, 1978 (7 NRC 400), the Commission denied certain aspects of the petition and, with respect to other aspects, ordered the NRC staff to take several related actions. UCS filed a Petition for Reconsideration on May 2, 1978. By Memorandum and Order, dated May 23, 1980, the Commission reaffirmed its April 13, 1978 decision regarding the possible shutdown of operating reactors. However, the Commission May 23, 1980 decision directed licensees and the NRC staff to undertake certain actions.

With respect to environmental qualification of safety-related electrical equipment, the Commission determined that the provisions of the two staff documents—the Division of Operating Reactors "Guidelines for Evaluating Environmental Qualification of Class 1E Electrical Equipment in Operating Reactors" (DOR Guidelines) and NUREG-0588, "Interim Staff Position on Environmental Qualification of Safety-Related Electrical Equipment," December 1979 "form the requirements which licensees and applicants must meet in order to satisfy those aspects of 10 CFR Part 50, Appendix A General Design Criterion (GDC-4), which relate to environmental qualification of safety-related electrical equipment." The Commission directed, for replacement parts in operating plants, "unless there are sound reasons to the contrary, the 1974 standard in NUREG-0588 will apply." The Commission also directed the staff to complete its review of the information sought from licensees by Bulletin 79-01B [1] and to complete its review of environmental qualification of safety-related electrical equipment in all operating plants, including the publication of Safety Evaluation Reports, by February 1, 1981. The Commission imposed a deadline that, "by no later than June 30, 1982 all safety-related electrical equipment in all operating plants shall be qualified to the DOR Guidelines or NUREG-0588." The Commission requested the staff to, "keep the Commission and the public apprised of any further findings of incomplete environmental qualification of safety-related electrical equipment, along with corrective actions taken or planned," and requested the staff to provide bi-monthly progress reports to the Commission.

The Commission further directed the staff to add certain documentation requirements to each license after the specific requirements were approved by the Commission. The Commission also pointed out that the various deadlines imposed in its Order, "do not excuse a licensee from the obligation to modify or replace inadequate equipment promptly."

III. The information developed during this proceeding emphasizes the importance of adequate documentation, the prompt completion of the review of environmental qualification of safety-related electrical equipment, and the prompt completion of any plant modification needed to assure conformance with the DOR Guidelines or NUREG-0588. A significant aspect of this review is the timely submittal of environmental qualification information by the operating plant licensees to enable the staff to complete its review in accordance with the Commission's Order. The staff has a program presently underway to reevaluate, using the DOR Guidelines and NUREG-0588, the qualifications of safety-related electrical equipment exposed to environments that

[1] Bulletin 79-01B was not sent to licensees for plants under review as part of the staff's Systematic Evaluation Program. The information sought by Bulletin 79-01B was requested from these licensees by a series of letters and meetings during the months of February and March, 1980.

may exist following postulated accidents. These accidents are Loss of Coolant Accident and Main Steam Line Break inside containment, and High Energy Line Breaks inside and outside containment.

In this connection the licensee was requested by I&E Bulletin 79-01B of January 14, 1980 to provide a detailed review of the environmental qualification of Class 1E electrical equipment. This review was to include all equipment required to function under postulated accident conditions, both inside and outside the primary containment, and recognize all conditions specified in the bulletin. Evidence of qualification together with methods and justification, was requested.

Clarification was provided by supplemental information, briefings, and in some cases, meetings with the licensee. Timely completion of the staff's review of environmental qualification of electrical equipment and timely completion of needed modifications by the licensee is required to provide continuing reasonable assurance of public health and safety. Such completion is dependent on the prompt receipt of a complete response by the licensee to the staff's requests for information. However, the licensee's response, to date, is incomplete.

Therefore, I have concluded that the public health, safety, and interest require that a firm schedule for the timely submission of all the information previously requested by the staff should be established by Order effective immediately.

IV. Accordingly, pursuant to the Atomic Energy Act of 1954, as amended, and the Commission's regulations in 10 CFR Parts 2 and 50, it is ordered that effective immediately Facility Operating License Nos. DPR-33, DPR-52, and DPR-68 are hereby amended to add the following provisions:

"Information which fully and completely responds to the staff's request as specified above, shall be submitted to the Director, Division of Licensing by the licensee not later than November 1, 1980."

An earlier response is encouraged to facilitate staff review and issuance of the safety evaluation report. The licensee or any person whose interest may be affected by this Order may request a hearing within 20 days of the date of this Order. Any request for a hearing will not stay the effective date of this Order. Any request for a hearing shall be addressed to the Director, Office of Nuclear Reactor Regulation, U.S. Nuclear Regulatory Commission, Washington, D.C. 20555. A copy of the request should also be sent to the Executive Legal Director, U.S. Nuclear Regulatory Commission, Washington, D.C. 20555, and to H. S. Sanger, Jr., Esquire, General Counsel, Tennessee Valley Authority, 400 Commerce Avenue, E11B, 33C Knoxville, Tennessee 37902, attorney for the licensee.

If a hearing is held concerning this Order, the issue to be considered at the hearing shall be whether the license should be modified to require submission of information as set forth in Section IV. of the Order.

Operating of the facility on terms consistent with this Order is not stayed by the pendency of any proceedings on the Order.

Effective date: August 29, 1980, Bethesda, Md.

For the Nuclear Regulatory Commission.

Darrell G. Eisenhut,

Director, Division of Licensing.

[FR Doc. 80-28176 Filed 9-11-80; 8:45 am]

BILLING CODE 7590-01-M

[Docket No. 50-346]

Toledo Edison Co. & Cleveland Electric Illuminating Co., Davis-Besse Nuclear Power Station, Unit No. 1; Order for Modification of License

I. The Toledo Edison Company (TECo) and The Cleveland Electric Illuminating Company (the licensees) are the holders of Facility Operating License No. NPF-3, which authorizes the operation of the Davis-Besse Nuclear Power Station, Unit No. 1 at steady state reactor power levels not in excess of 2772 megawatts thermal (rated power). The facility consists of a pressurized water reactor located at the licensee's site in Ottawa County, Ohio.

II. On November 4, 1977, the Union of Concerned Scientists (UCS) filed with the Commission a "Petition for Emergency and Remedial Relief." The petition sought action in two areas: fire protection for electrical cables, and environmental qualification of electrical components. By Memorandum and Order dated April 13, 1978 (7 NRC 400), the Commission denied certain aspects of the petition and, with respect to other aspects, ordered the NRC staff to take several related actions. UCS filed a Petition for Reconsideration on May 2, 1978. By Memorandum and Order, dated May 23, 1980, the Commission reaffirmed its April 13, 1978 decision regarding the possible shutdown of operating reactors. However, the Commission's May 23, 1980 decision directed licensees and the NRC staff to undertake certain actions.

With respect to environmental qualification of safety-related electrical equipment, the Commission determined that the provisions of the two staff documents—the Division of Operating Reactors "Guidelines for Evaluating Environmental Qualification of Class 1E Electrical Equipment in Operating Reactors" (DOR Guidelines) and NUREG-0588, "Interim Staff Position on Environmental Qualification of Safety-Related Electrical Equipment," December 1979 "form the requirements which licensees and applicants must meet in order to satisfy those aspects of 10 CFR Part 50, Appendix A General Design Criterion (GDC-4), which relate to environmental qualification of safety-related electrical equipment." The Commission directed, for replacement parts in operating plants, "unless there are sound reasons to the contrary, the 1974 standard in NUREG-0588 will apply." The Commission also directed the staff to complete its review of the information sought from licensees by Bulletin 79-01B [1] and to complete its review of environmental qualification of safety-related electrical equipment in all operating plants, including the publication of Safety Evaluation Reports, by February 1, 1981. The Commission imposed a deadline that, "by no later than June 30, 1982 all safety-related electrical equipment in all operating plants shall be qualified to the DOR Guidelines or NUREG-0588." The Commission requested the staff to, "keep the Commission and the public apprised of any further findings of incomplete environmental qualification of safety-related electrical equipment, along with corrective actions taken or planned," and requested the staff to provide bi-monthly progress reports to the Commission.

The Commission further directed the staff to add certain documentation requirements to each license after the specific requirements were approved by the Commission. The Commission also pointed out that the various deadlines imposed in its Order, "do not excuse a licensee from the obligation to modify or replace inadequate equipment promptly."

III. The information developed during this proceeding emphasizes the importance of adequate documentation, the prompt completion of the review of environmental qualification of safety-related electrical equipment, and the prompt completion of any plant

1 Bulletin 79-01B was not sent to licensees for plants under review as part of the staff's Systematic Evaluation Program. The information sought by Bulletin 79-01B was requested from these licensees by a series of letters and meetings during the months of February and March, 1980.

modification needed to assure conformance with the DOR Guidelines or NUREG-0588. A significant aspect of this review is the timely submittal of environmental qualification information by the operating plant licensees to enable the staff to complete its review in accordance with the Commission's Order. The staff has a program presently underway to reevaluate, using the DOR Guidelines and NUREG-0588, the qualifications of safety-related electrical equipment exposed to environments that may exist following postulated accidents. These accidents are Loss of Coolant Accident and Main Steam Line Break inside containment, and High Energy Line Breaks inside and outside containment.

In this connection TECo was requested by I&E Bulletin 79-01B dated January 14, 1980, to provide a detailed review of the environmental qualification of Class 1E electrical equipment. This review was to include all equipment required to function under postulated accident conditions, both inside and outside the primary containment, and recognize all conditions specified in the bulletin. Evidence of qualification together with methods and justification, was requested.

Clarification was provided by supplemental information, briefings, and in some cases, meetings with TECo. Timely completion of the staff's review of environmental qualification of electrical equipment and timely completion of needed modifications by TECo is required to provide continuing reasonable assurance of public health and safety. Such completion is dependent on the prompt receipt of a complete response by TECo to the staff's requests for information. However, TECo's response, to date, is incomplete.

Therefore, I have concluded that the public health, safety, and interest require that a firm schedule for the timely submission of all the information previously requested by the staff should be established by Order effective immediately.

IV. Accordingly, pursuant to the Atomic Energy Act of 1954, as amended, and the Commission's regulations in 10 CFR Parts 2 and 50, it is ordered that effective immediately Facility Operating License No. NPF-3 is hereby amended to add the following provisions:

"Information which fully and completely responds to the staff's request as specified above, shall be submitted to the Director, Division of Licensing, by TECo not later than November 1, 1980."

An earlier response is encouraged to facilitate staff review and issuance of the safety evaluation report. The licensees or any person whose interest may be affected by this Order may request a hearing within 20 days of the date of this Order. Any request for a hearing will not stay the effective date of this Order. Any request for a hearing shall be addressed to the Director, Office of Nuclear Reactor Regulation, U.S. Nuclear Regulatory Commission, Washington, D.C. 20555. A copy of the request should also be sent to the Executive Legal Director, U.S. Nuclear Regulatory Commission, Washington, D.C. 20555, and to Gerald Charnoff, Esquire, Shaw, Pittman, Potts and Trowbridge, 1800 M Street, NW., Washington, DC 20036, attorney for the licensees.

If a hearing is held concerning this Order, the issue to be considered at the hearing shall be whether the license should be modified to require submission of information as set forth in Section IV of the Order.

Operating of the facility on terms consistent with this Order is not stayed by the pendency of any proceedings on the Order.

Effective date: August 29, 1980, Bethesda, Md.

For the Nuclear Regulatory Commission.

Darrell G. Eisenhut,

Director, Division of Licensing.

[FR Doc. 80-28179 Filed 9-11-80; 8:45 am]

BILLING CODE 7590-01-M

OFFICE OF MANAGEMENT AND BUDGET

Agency Forms Under Review

September 8, 1980.

Background

When executive departments and agencies propose public use forms, reporting, or recordkeeping requirements, the Office of Management and Budget (OMB) reviews and acts on those requirements under the Federal Reports Act (44 USC, Chapter 35). Departments and agencies use a number of techniques including public hearings to consult with the public on significant reporting requirements before seeking OMB approval. OMB in carrying out its responsibility under the Act also considers comments on the forms and recordkeeping requirements that will affect the public.

List of Forms Under Review

Every Monday and Thursday OMB publishes a list of the agency forms received for review since the last list was published. The list has all the entries for one agency together and grouped into new forms, revisions, extensions, or reinstatements. Some forms listed as revisions may only have a change in the number of respondents or a reestimate of the time needed to fill them out rather than any change to the content of the form. The agency clearance officer can tell you the nature of any particular revision you are interested in. Each entry contains the following information:

The name and telephone number of the agency clearance officer (from whom a copy of the form and supporting documents is available);

The office of the agency issuing this form;

The title of the form;

The agency form number, if applicable;

How often the form must be filled out;

Who will be required or asked to report;

An estimate of the number of forms that will be filled out;

An estimate of the total number of hours needed to fill out the form; and

The name and telephone number of the person or office responsible for OMB review.

Reporting or recordkeeping requirements that appear to raise no significant issues are approved promptly. Our usual practice is not to take any action on proposed reporting requirements until at least ten working days after notice in the Federal Register but occasionally the public interest requires more rapid action.

Comments and Questions

Copies of the proposed forms and supporting documents may be obtained from the agency clearance officer whose name and telepone number appear under the agency name. The agency clearance officer will send you a copy of the proposed form, the request for clearance (SF83), supporting statement, instructions, transmittal letters, and other documents that are submitted to OMB for review. If you experience difficulty in obtaining the information you need in reasonable time, please advise the OMB reviewer to whom the report is assigned. Comments and questions about the items on this list should be directed to the OMB reviewer or office listed at the end of each entry.

If you anticipate commenting on a form but find that time to prepare will prevent you from submitting comments promptly, you should advise the reviewer of your intent as early as possible.

The timing and format of this notice have been changed to make the

publication of the notice predictable and to give a clearer explanation of this process to the public. If you have comments and suggestions for further improvements to this notice, please send them to Jim J. Tozzi, Assistant Director for Regulatory and Information Policy, Office of Management and Budget, 726 Jackson Place, Northwest, Washington, D.C. 20503

DEPARTMENT OF DEFENSE

Agency Clearance Officer—John V. Wenderoth—697-1195

Revisions

Department of the Air Force
Production Analysis Report
On occasion
Defense aerospace contractors, 480 responses; 9,120 hours
Edward C. Springer, 395-4814

Department of the Air Force
Program Schedule
AFSC 103
On occasion
Defense contractors, 16,380 responses; 65,520 hours
Edward C. Springer, 395-4814

DEPARTMENT OF ENERGY

Agency Clearance Officer—Diane W. Lique—633-8526

New Forms

Unclassified Visit Proposal
IA—473
On occasion
Foreign applicants, 2,000 responses; 1,000 hours
Jefferson B. Hill, 395-7340

Retail Electric Cost of Service Report Under $133 of Purpa
FERC-557
Other (see SF-83)
Electric Util. with over 500 million kWh annual sales, 179 responses; 626,500 hours
Jefferson B. Hill, 395-7340

DEPARTMENT OF HEALTH AND HUMAN SERVICES

Agency Clearance Officer—Joseph J. Strnad—245-7488

New Forms

Health Care Financing Administration (Medicare)
Medicare and Medicaid Programs; Protection of Patients'
Funds
HCFA-R-3
On occasion
Nursing homes
Eisinger, Richard, 395-6880

Public Health Service
Preliminary Plans for the Hispanic Hanes
Single time
Probability Sample of Hispanics in selected areas of US Off. of Federal Statistical Policy and Standard, 673-7974

Revisions

Alcohol, Drug Abuse and Mental Health Administration
Client Oriented Data Acquisition Process (CODAP)
Adm 427-1, 3, 4
Monthly
Federally-funded drug abuse programs, 465,000 responses; 68,200 hours
Eisinger, Richard, 395-6880

Center for Disease Control
Development and Evaluation of Sex Education Programs
Single time
Teenagers and Parents of teenagers in sex ed. programs, 7,600 responses; 11,853 hours
Eisinger, Richard, 395-6880

DEPARTMENT OF HOUSING AND URBAN DEVELOPMENT

Agency Clearance Officer—Robert G. Masarsky—755-5184

Revisions

Housing Production and Mortgage Credit
Application for VA or FMHA Home Loan Guaranty or for
HUD/FHA insured mortgage VA 26-1802A/HUD-92900
HUD-92900/VA 26-1802A 2900
On occasion
Individual seeking FHA financing through mortgage, 1,000,000 responses; 1,000,000 hours
Richard Sheppard, 395-6880

DEPARTMENT OF LABOR

Agency Clearance Officer—Paul E. Larson—523-6341

New Forms

Employment Standards Administration
Service Contract Act Survey Questionnaire[1]
ESA-85T
Single time
Govt. R. & D. contractors, 50 responses; 50 hours
Arnold Strasser, 395-6880

[1]The collection of this information has already been approved by OMB in order to allow the Department of Labor to obtain data it needs for an analysis of its proposed Service Contracts Act regulation (29 CFR part 4). Promulgation of this regulation is expected by October 1980, and the analysis is necessary to make final determinations about the scope and impact of the regulation. This rulemaking has been proceeding since December 1979 (44 FR 250). It is in the public interest to expedite approval of this information collection to permit determinations about the final rule.

DEPARTMENT OF TRANSPORTATION

Agency Clearance Officer—Bruce H. Allen—426-1887

New Forms

Departmental and Other
Bus Maintenance and Storage Facility Data
Single time
Public mass transit operators, 380 responses; 1,140 hours
Hayward, Corinne D., 395-7340

Federal Aviation Administration
Certification and Operations—FAR
On occasion
Aircraft operators, 1,892,192 responses; 556,473 hours
Hayward, Corinne D., 395-7340

Reinstatements

Coast Guard
Application for Appointment as Cadet, U.S. Coast Guard
CG-4151
Annually
High school graduates under 22, 7,000 responses; 350 hours
Hayward, Corinne D., 395-7340

Federal Highway Administration
Test Program for Driver's Log Alternatives
Single time
Drivers of interstate motor carriers of prop. and passengers, 1,057,000 responses; 176,167 hours
Hayward, Corinne D., 395-7340

GENERAL SERVICES ADMINISTRATION

Agency Clearance Officer—John F. Gilmore—566-1164

New Forms

Report of Sales for Brand Products, Price Offers,
Product Characterization
Other (see SF-83)
Varies, 400 responses; 200 hours
Kenneth B. Allen, 395-3785

Application/Permit for Use of Space in Public Buildings
GSA 3453
On Occasion
General public, 12,500 responses; 1,041 hours
Kenneth B. Allen, 395-3785

Appraisal of Fair Annual Parking Per Space for Sluc
Annually
Contract appraisers, 1,000 responses; 4,000 hours
Kenneth B. Allen, 395-3785

C. Louis Kincannon,
Acting Deputy Assistant Director for Reports Management.

[FR Doc. 80-28094 Filed 9-11-80, 8:45 am]
BILLING CODE 3110-01-M

SECURITIES AND EXCHANGE COMMISSION

[Release No. 34-17121/September 5, 1980; File No. SR-Amex-80-23]

American Stock Exchange, Inc.; Self-Regulatory Organizations; Proposed Rule Change

Pursuant to Section 19(b)(1) of the Securities Exchange Act of 1934, 15 U.S.C. 78s(b)(1), as amended by Pub. L. No. 94-29, 16 (June 4, 1975), notice is hereby given that on August 28, 1980, the above-mentioned self-regulatory organization filed with the Securities and Exchange Commission a proposed rule change as follows:

American Stock Exchange's Statement of Terms of Substance of Proposed Rule Change

The American Stock Exchange, Inc.* ("Amex") proposed to amend Exchange Rules 904 and 905. The texts of the proposed amendment are set forth below (italics indicate new material; brackets indicate deletions):

Position Limits

Rule 904. Except with the prior written approval of the Exchange in each instance, no member or member organization shall effect, for any acount in which such member or member organization has an interest or for the account of any partner, officer, director or employee thereof or for the account of any customer, an opening transaction (whether on the Exchange or on another Participating Exchange) in an option contract of any class of options dealt in on the Exchange if the member of member organization has reason to believe that a result of such transaction the member or member organization or partner, officer, director or employee thereof or customer would, acting alone or in concert with others, directly or indirectly, hold or control or be obligated in respect of an aggregate position in excess of [1,000] *2000* option contracts (whether long or short) of the put class and the call class on the same side of the market covering the same underlying security, combining for purposes of this rule long positions in put options with short positions in call options, and short positions in put options with long positions call options, or such other number of option contracts as may be fixed from time to time by the Exchange as the position limit for one or more classes or series of options.

Commentary: (No change).

Exercise Limits

Rule 905. Except with the prior approval of the Exchange in each instancee, no member or member organization shall exercise, for any account in which such member or member organization has an interest or for the account of any partner, officer, director or employee thereof or for the account of any customer, a long position in any option contract of a class of options dealt in on the Exchange if as a result thereof such member or member organization, or partner, officer, director or employee thereof or customer, acting alone or in concert with others, directly or indirectly, has or will have exercised within any five (5) consecutive business days aggregate long positions in excess of [1,000] *2000* option contracts of that particular class of options or such other number of options contracts as may be fixed from time to time by the Exchange as the exercise limit for that particular class of options.

Commentary: (No change).

Amex's Statement of Purpose and Basis Under the Act for the Proposed Rule Change

Position and exercise limit rules were originally adopted by options exchanges in order to minimize manipulative potential by reducing the incentive to manipulative that may occur with the accumulation of large option positions.

Present rules limit market participants from holding more than 1,000 contracts on the "same side of the market"—i.e., more than 1,000 short calls and long puts or 1,000 long calls and short puts—with respect to any underlying security. Such limitations have presented certain problems for certain large investors. In particular, managers of large portfolios have found that the existing limits do not provide them with the ability to employ options in order to adjust and control the risk/reward characteristics of portfolios in a significant manner.

For example, writing calls against long stock positions ("covered" calls) will generally lower portfolio risk by off-setting some potential loss at the cost of some potential gain. Likewise, the risk and reward characteristics of writing cash equivalent secured puts are very similar to those involving covered call writing. The major difference in strategies is that writing secured puts involves an underlying stock that one may be willing to hold in the portfolio, rather than one that is already held.

Buying puts against long stock positions is another way to control risk by limiting the potential loss inherent in common stock ownership. In this way, the purchase of puts functions like term insurance, providing investors with protection against the risk of capital loss in return for a premium.

Buying call options in combination with fixed income securities such as Treasury Bills is another way to control the risk/reward potential of a portfolio. The risk of loss is limited to the cost of the options, while the opportunity for gain approximates that of stock ownership. By using these and other strategies, money managers may seek to achieve a proper balance of portfolio risk and potential reward through the use of listed options. However, the present rule restrictions either prevent or severely handicap the use of options in the management of large portfolios, since transactions in calls or puts on the same side of the market are limited to no more than 100,000 shares of underlying stock. The Special Study of the Options Markets[1] recognized this problem and recommended that position limit rules of the option exchanges be reviewed. In making this recommendation, the Options Study noted that numberous letters were received from investment advisors and other market professionals requesting that the present rules be liberalized or otherwise modified.

Since the termination of the options moratorium, there are many more puts classes available to investors. This expansion of puts has provided market participants with the means to engage in additional types of hedging activities involving puts, calls, and the related underlying stock. However, the 1,000 contract limitation on the same side of the market has the effect of limiting such hedged positions to a 50,000 share equivalent position. In reality, this position is neutral and would not really be on any "side of the market".

The Exchange has now had several years of experience in surveillance of the option markets. New and amended rules of the options exchanges promulgated in response to the Option Study provide additional public protections. Further, improved surveillance and compliance procedures have also been instituted by both the self-regulatory organizations and member firms.

For the reasons cited above, the Exchange believes that position limit rules should be expanded. At this time the Exchange proposed to amend Rule 904 to allow a single account to hold no more than 2,000 calls or puts on the same side of the market with respect to an underlying security. Exchange Rule 905 relating to exercise limits should also be broadened accordingly.

[1] See Report of the Special Study of the Options Markets to the SEC, December 22, 1980, pages 40, 41.

It may be that Exchange experience with the proposed new limits will lead it to conclude that such limits should be further increased beyond 2,000. At such time, the Exchange may file a proposed rule change to that effect.

Position limits are authorized by Section 6(b)(5) of the Securities Exchange. The basis for the proposed rule change is found, in part, in the Report of the Special Study of the Options Markets to the Commission which indicated that position limit rules of the options exchanges be reviewed. Further, liberalization of such rules will alleviate restrictions which seem unnecessary in light of the regulatory purposes of the Act.

No comments were solicited by Amex and none were received. Written comments were received by the Commission staff during its Options Study from several managers of large portfolios (mainly institutions) in support of liberalizing the present position limit rules.

The proposed rule change will not impose any burden on competition.

On or before October 17, 1980, or within such longer period (i) as the Commission may designate up to 90 days of such date if it finds such longer period to be appropriate and publishes its reasons for so finding or (ii) as to which the above-mentioned self-regulatory organization consents, the Commission will:

(a) By order approve such proposed rule change; or

(b) Institute proceedings to determine whether the proposed rule change should be disapproved.

Interested persons are invited to submit written data, views and arguments concerning the foregoing. Persons desiring to make written submissions should file six (6) copies thereof with the Secretary of the Commission, Washington, D.C. 20549. Copies of the filing with respect to the foregoing and of all written submissions will be available for inspection and copying in the Public Reference Room, 1100 L. Street, N.W., Washington, D.C. Copies of such filing will also be available for inspection and copying at the principal office of the above-mentioned self-regulatory organizaiton. All submissions should refer to the file number referenced in the caption above and should be submitted on or before October 3, 1980.

For the Commission by the Division of Market Regulation, pursuant to delegated authority.

George A. Fitzsimmons,

Secretary.

September 5, 1980.

[FR Doc. 80-28139 Filed 9-11-80; 8:45 am]

BILLING CODE 8010-01-M

[Release No. 34-17122; File No. SR-Amex-80-24]

American Stock Exchange, Inc.; Self-Regulatory Organization; Proposed Rule Change

Pursuant to Section 19(b)(1) of the Securities Exchange Act of 1934, 15 U.S.C. 78s(b)(1), as amended by Pub. L. No. 94-29, 16 (June 4, 1975) (the "Act"), notice is hereby given that on August 29, 1980 the above-mentioned self-regulatory organization filed with the Securities and Exchange Commission a proposed rule change as follows:

American Stock Exchange's Statement of Terms of Substance of the Proposed Rule Change

The American Stock Exchange, Inc. ("Amex") proposes to amend its policies relating to the intervals at which exercise prices of options are fixed (the "Exercise Price Amendments"). The proposed amendments to these policies are set forth below. Brackets indicate words to be deleted, and italics indicate words to be added.

Exercise prices are generally fixed at 5 point intervals for securities traded below [50] *100,* and 10 point intervals for securities trading [between 50 and 200 and 20 point intervals for securities trading above 200] *above 100.*

Amex's Statement of Purpose and Basis Under Act for the Proposed Rule Change

These amendments were the subject of a previous 19b filing (see SR-Amex-77-9) which filing was withdrawn at the request of the Commission during the options moratorium.

The purpose of the Exercise Price Amendments is to enable the Amex to set the exercise price of series of options opened for trading on the Amex at a price per share which is closer to the market price per share at which the underlying stock is traded in the primary market.

When implemented the Exercise Price Amendments will result in a small increase in the number of series of options opened for trading on the Amex. At present based upon the market price of the stocks underlying the options traded on the Amex, only eleven classes of options would be affected by the Exercise Price Amendments. Consequently, the Exercise Price Amendments will not adversely affect the operational capacity of the Amex.

The ability to open an options series at prices closer to the price of the underlying stock would make it easier for public customers to reduce their risks through increased hedging and other purchasing and writing strategies. Specialists and Registered Options Traders would be better able to make fair and orderly markets in these issues. The public would thus be afforded greater access to a narrow, continuous, two-sided market.

The Exercise Price Amendments are authorized by Section 6(b)(5) of the Securities Exchange Act of 1934 (the "1934 Act"). Such Amendments are designed to permit the narrowing of the markets in options dealt in on the Exchange by enabling the Amex to set the exercise price of series of options opened for trading on the Amex at a price per share which is closer to the market price per share at which the underlying stock is traded in the primary market. The Amex believes that the Exercise Price Amendments will serve to promote just and equitable principles of trade and to protect investors in exchange traded option contracts.

The Exercise Price Amendments were considered and approved by the Options Committee of the Amex which is composed of Amex members and representatives of Amex member organizations.

No comments concerning the proposal were solicited by Amex and none were received.

The Amex has determined that the Exercise Price Amendments would not impose any burden on competition.

On or before October 17, 1980, or within such longer period (i) as the Commission may designate up to 90 days of such date if it finds such longer period to be appropriate and publishes its reasons for so finding or (ii) as to which the above mentioned self-regulatory organization consents, the Commission will:

(a) By order approve such proposed rule change, or

(b) Institute proceedings to determine whether the proposed rule change should be disapproved.

Interested person are invited to submit written data, views and arguments concerning the foregoing. Persons desiring to make written submissions should file six copies thereof with the Secretary of the Commission, Securities and Exchange Commission, Washington, D.C. 20549. Copies of the filing with respect to the foregoing and of all written submissions will be available for inspection and

copying in the Public Reference Room 1100 L Street, NW., Washington, D.C. Copies of such filings will also be available for inspection and copying at the principle office of the above-mentioned self-regulatory organization. All submissions should refer to the file number referenced in the caption above and should be submitted on or before October 3, 1980.

For the Commission by the Division of Market Regulation, pursuant to delegated authority.

George A. Fitzsimmons,

Secretary.

September 5, 1980.

[FR Doc. 80-28140 Filed 9-11-80; 8:45 am]

BILLING CODE 8010-01-M

[Rel. No. 21710; 70-6493]

Eastern Edison Co. and Montaup Electric Co.; Proposal of Parent To Issue and Sell First Mortgage Bonds and Preferred Stock at Competitive Bidding and To Purchase Debentures To Be Issued and Sold by Subsidiary

September 8, 1980.

Notice is hereby given that Eastern Edison Company ("Eastern") 36 Main Street Brockton, Massachusetts 02403, and electric utility subsidiary of Eastern Utilities Associates, a registered holding company, and Montaup Electric Company ("Montaup") P.O. Box 391 Fall River, Massachusetts 02722, an electric utility subsidiary of Eastern, have filed and application-declaration and an amendment thereto with this Commission pursuant to the Public Utility Holding Company Act of 1935 ("Act") designating Sections 6, 7, 9, 10 and 12 of the Act and Rule 50 promulgated thereunder as applicable to the proposed transactions. All interested persons are referred to the application-declaration, which is summarized below, for a complete statement of the proposed transactions.

Eastern proposes to increase its capital stock in an amount up to $15,000,000 consisting of not in excess of 150,000 shares of its % preferred stock, par value $100 per share ("New Preferred Stock"), and to issue an sell such additional shares at competitive bidding. The proposed dividend rate (which shall be a mulitple of .04% of the par value) and the price (which shall be not less than $100, nor more than $102.75 per share) for the New Preferred Stock will be determined by competitive bidding.

It is stated that the New Preferred Stock will be redeemable as a whole or in part at a redemption price which shall be equal to the public offering price plust 100% of the annual dividend rate for the first five years, with that percentage declining to 75%, 50% and 25% respectively, in the second, third and fourth five-year periods and to 10% thereafter, together in each case with accrued dividends. Redemption for the purpose of refunding at an effective interest or dividend cost less than the effective dividend cost to Eastern of the New Preferred Stock will be prohibited for the first five years, through September 30, 1985. The sinking fund provision will require Eastern to redeem at the initial public offering price plus accrued dividends 6,000 shares on each October 1 beginning in 1985. This obligation will be cumulative. In addition, Eastern will have the right beginning October 1, 1985, to redeem at the same price not more than an additional 6,000 shares each year. This right shall not be cumulative. There shall also be a prohibition, effective if ans so long as a default exists on any obligation of Eastern with respect to the sinking fund for the New Preferred Stock, against Eastern's paying any dividend or making any other distribution on junior stock (except dividends payable in shares of such junior stock) or acquiring for value any junior stock, otherwise than by exchange or use of proceeds forthwith from the contemporaneous issuance of junior stock.

Eastern proposes to issue and sell at competitive bidding up to $15,000,000 principal amount of its first mortgage and collateral trust bonds, % Series ("New Bonds"). The maturity date of the New Bonds will be supplied by amendment. The proposed interest rate (which shall be a multiple of ⅛ of 1%) and the price (which shall be not less than 100% nor more than 102¾% of the principal amount) will be determined through competitive bidding. It is stated that the Supplemental Indenture relating to the New Bonds will contain a prohibition until October 1, 1985 against redemption of the New Bonds as a part of or in anticipation of any refunding at a lower effective interest cost.

Montaup proposes to issue and sell to Eastern, and Eastern proposes to purchase at their principal amount plus accrued interest, up to $20,000,000 principal amount of % Debenture Bonds due 2010 ("New Debenture Bonds"). The New Debenture Bonds will be dated October 1, 1980, will mature October 1, 2010, and will bear interest payable January 1, April 1, July 1, and October 1 in each year. The effective interest cost to Montaup will approximate the composite cost (including income tax effect) of the New Bonds and, to the extent utilized, the New Preferred Stock. In no case will such cost to Montaup exceed 15% per annum without express approval of the Commission. The New Debenture Bonds themselves will contain all of their terms and there will be no indenture or similar instrument governing them.

The net proceeds to Eastern from the sale of the New Bonds and New Preferred Stock will be applied first, to the extent of $20,000,000, for the purchase of the New Debenture Bonds proposed to be issued by Montaup, second, to the extent of $5,000,000, for the reduction of short-term bank indebtedness incurred by Eastern for construction or incurred to repay earlier borrowings so incurred, and third, for the prepayment of a $5,000,000 portion of Eastern's secured borrowing from Citibank, N.A. outstanding in the principal amount of $15,000,000.

The net proceeds to Montaup from the sale of the of the New Debenture Bonds will be used to reduce short-term bank indebtedness incurred for construction (including facilities owned or to be owned in common with other utilities) or incurred to repay earlier borrowings so incurred. It is stated that bank borrowings of Montaup will be outstanding in the amount of approximately $39,200,000 at the time the New Debenture Bonds are issued.

It is stated that the Department of Public Utilities of the Commonwealth of Massachusetts has jurisdiction over the proposed transactions and that the Department of Public Utility Control of the State of Connecticut may have jurisdiction over the proposed issuance and sale of the New Debenture Bonds by Montaup. No other state commission and no federal commission, other than this Commission, has jurisdiction over the proposed transactions. The fees and expenses to be incurred in connection with the proposed transactions will be supplied by amendment.

Notice is further given that any interested person may, not later than October 3, 1980, request in writing that a hearing be held on such matter, stating the nature of his interest, the reasons for such request, and the issues of fact or law raised by said application-declaration which he desires to controvert; or he may request that he be notified if the Commission should order a hearing thereon. Any such request should be addressed: Secretary, Securities and Exchange Commission, Washington, D.C. 20549. A copy of such request should be served personally or by mail upon the applicants-declarants at the above-stated addresses and proof of service (by affidavit or, in case of an attorney at law, by certificate) should be

filed with the request. At any time after said date, the application-declaration, as amended or as it may be further amended, may be permitted to become effective as provided in Rule 23 of the General Rules and Regulations promulgated under the Act, or the Commission may grant exemption from such rules as provided in Rules 20(a) and 100 thereof or take such other action as it may deem appropriate. Persons who request a hearing or advice as to whether a hearing is ordered will receive any notices and orders issued in this matter, including the date of the hearing (if ordered) and any postponements thereof.

For the Commission, by the Division of Corporate Regulation, pursuant to delegated authority.

George A. Fitzsimmons,

Secretary.

[FR Doc. 80-28138 Filed 9-11-80; 8:45 am]

BILLING CODE 8010-01-M

[File No. 500-1]

General Finance Corp. (Arizona); Order of Suspension of Trading

August 14, 1980.

It appearing to the Securities and Exchange Commission that there are questions concerning the adequacy and accuracy of the company's financial statements with respect to the nature and validity of the company's assets, the Commission is of the opinion that the public interest and the protection of investors require a summary suspension of trading in the securities of General Finance Corporation.

Therefore, it is ordered, pursuant to Section 12(k) of the Securities Exchange Act of 1934, that trading in such securities on a national securities exchange or otherwise is suspended, for the period from 12:30 p.m. on August 14, 1980 through August 23, 1980.

By the Commission.

George A. Fitzsimmons,

Secretary.

[FR Doc. 80-28143 Filed 9-11-80; 8:45 am]

BILLING CODE 8010-01-M

[File No. 500-1]

Investors Funding Corp. of New York; Order of Suspension of Trading

August 13, 1980.

At the request of the Trustee in Bankruptcy and pending release and dissemination of a Plan of Reorganization for Investors Funding Corp. of New York the Commission is of the opinion that the public interest and the protection of investors require a summary suspension of trading in the securities of Investors Funding Corp. of New York (including debentures of IFC Collateral Corp.).

Therefore, it is ordered, pursuant to Section 12(k) of the Securities Exchange Act of 1934, that trading in such securities on a national securities exchange or otherwise is suspended, for the period from 9:30 a.m. on August 13, 1980 through August 22, 1980.

By the Commission.

George A. Fitzsimmons,

Secretary.

[FR Doc. 80-28142 Filed 9-11-80; 8:45 am]

BILLING CODE 8010-01-M

[Rel. No. 17131; SR-MSE-80-13]

Midwest Stock Exchange, Inc.; Order Approving Proposed Rule Change

September 8, 1980.

On July 21, 1980, the Midwest Stock Exchange, Inc., 120 South LaSalle Street, Chicago, Illinois 60603 filed with the Commission, pursuant to Section 19(b)(1) of the Securities Exchange Act of 1934, 15 U.S.C. 78(s)(b)(1) ("Act") and Rule 19b-4 thereunder, copies of a proposed rule change which amends Article VIII, Rule 9 of the Exchange Rules, which governs off-floor transactions, to conform its provisions with the requirements of Commission Rule 19c-3 under the Securities Exchange Act.

Notice of the proposed rule change together with the terms of substance of the proposed rule change was given by publication of a Commission Release (Securities Exchange Act Release No. 34-17013, July 28, 1980) and by publication in the Federal Register (45 FR 51325, August 1, 1980). No comments were received with respect to the proposed rule filing.

The Commission finds that the proposed rule change is consistent with the requirements of the Act and the rules and regulations thereunder applicable to national securities exchange, and in particular, the requirements of Section 6(b)(5) to remove impediments to and perfect the mechanism of a free and open market.

It is therefore ordered, pursuant to Section 19(b)(2) of the Act, that the above-mentioned proposed rule change be, and it hereby is, approved.

For the Commission, by the Division of Market Regulation pursuant to delegated authority.

George A. Fitzsimmons,

Secretary.

[FR Doc. 80-28128 Filed 9-11-80; 8:45 am]

BILLING CODE 8010-01-M

[Rel. No. 17132; SR-NYSE-80-25]

New York Stock Exchange, Inc.; Order Approving Proposed Rule Change

September 8, 1980.

On July 14, 1980, the New York Stock Exchange, Inc. ("NYSE") 11 Wall Street New York, New York 1005 filed with the Commission, pursuant to Section 19(b)(1) of the Securities Exchange Act of 1934, 15 U.S.C. 78(s)(b)(1) ("Act") and Rule 19b-4 thereunder, copies of a proposed rule change to provide for the operation of the Opening Automated Report Service ("Service"), which is designed to facilitate more efficient and accurate processing of certain orders received by the NYSE though DOT [1] prior to the opening. The five functions of the Service will be

(1) To store—but not deliver to the trading post—individual pre-opening market orders;

(2) To continuously tabulate these orders; matching buy and sell interest and calculating any remaining imbalance;

(3) To inform the specialist of the tabulated buy/sell interest and imbalance;

(4) [Then, after the specialist executes the orders in the Service] to electronically receive the opening price in a stock via a single mark-sense card from the specialist; and

(5) To disburse automatically—upon receipt of the opening price—machine generated reports to member firms for each stored order.

The Service is designed to achieve system efficiencies which would (i) materially assist specialists in arranging the opening transactions in their assigned stocks through automation of several clerical tasks at the trading post of the critical period just prior to the opening, (ii) improve reporting of completed trades through immediate dissemination of execution reports upon the opening of trading, and (iii) result in fewer questioned trades at the opening and, thus, would promote more efficient and accurate clearing and settlement of securities transactions.

Notice of the proposed rule change together with the terms of substance of the proposed rule change was given by publication of a Commission Release (Securities Exchange Act Release No.

[1] "DOT" is the acronym for the NYSE's Designated Order Turnaround System, an application of the Common Message Switch, which permits NYSE members to route market orders and day limit orders on an automated basis directly to the appropriate specialist on the NYSE trading floor. On March 13, 1980, the Commission approved implementation of the Service on a pilot basis. Securities Exchange Act Release No. 16649 (March 13, 1980) 45 FR 16541.

34-17014, July 29, 1980) and by publication in the Federal Register (45 FR 51326, August 1, 1980). No comments were received with respect to the proposed rule filing.

The Commission finds that the proposed rule change is consistent with the requirements of the Act and the rules and regulations thereunder applicable to national securities exchanges. The Service should better enable the Exchange to carry out the purposes of the Act, including the maintenance of fair and orderly markets, the fostering of competition and cooperation with persons engaged in settling and processing information with respect to transactions in securities and facilitating transactions in securities, pursuant to Section 6(b)(5). In addition, the Service will introduce new data processing and communications techniques which should result in a more efficient and effective market operation consistent with the objectives of Section 11A(a)(1)(B). Finally, the Service is consistent with and should advance the purposes of Section 17A(a)(1) of the Act, including the prompt and accurate clearance and settlement of securities transactions and the introduction of more efficient procedures for the clearance and settlement operation.

It is therefore ordered, pursuant to Section 19(b)(2) of the Act, that the above-mentioned proposed rule change be, and it hereby is, approved.

For the Commission, by the Division, of Market Regulation pursuant to delegated authority.

George A. Fitzsimmons,

Secretary.

[FR Doc. 80-28135 Filed 9-11-80; 8:45 am]

BILLING CODE 8010-01-M

[Release No. 34-17113; File No. SR-NYSE-80-34]

New York Stock Exchange, Inc.; Self-Regulatory Organizations; Proposed Rule Change

Pursuant to Section 19(b)(1) of the Securities Exchange Act of 1934, 15 U.S.C. 78s(b)(1), as amended by Pub. L. No. 94-29, 16 (June 4, 1975), notice is hereby given that on Aug. 25, 1980, the above-mentioned self-regulatory organization filed with the Securities and Exchange Commission a proposed rule change as follows:

Exchange's Statement of the Terms of Substance of the Proposed Rule Change

The amendments provide for an increase in the size of the Board of Directors and the Emergency Committee to include the President of the Exchange.

Purpose of Proposed Rule Change

The proposed amendments would permit the President and Chief Operating Officer of the Exchange to serve on the Board of Directors and on the Emergency Committee of the Exchange. The Board will now consist of twenty directors elected by the membership, a Chairman of the Board and the President. The Emergency Committee will now consist of six directors.

Basis Under the Act

The proposed Constitutional amendments are consistent with Section 6(b)(1) of the Act in that they relate to the organization of the Exchange and the capacity of the Exchange to be able to carry out the purposes of the Securities Exchange Act of 1934 as amended.

Comments Received From Members, Participants or Others

No comments were solicited or received with respect to the proposed Constitutional amendments.

Burden on Competition

There will be no burden on competition.

Basis For Rule Change Being Put Into Effect Pursuant to Section 19(b)(3)

In accordance with Section 19(b)(3)(A)(iii) the proposed amendments take effect immediately, as they are concerned solely with the administration of the New York Stock Exchange, Inc.

At any time within sixty days of the date of filing of these proposed rule changes, the Commission summarily may abrogate the change if it appears to the Commission that such action is necessary or appropriate in the public interest, for the protection of investors, or otherwise in furtherance of the purposes of the Securities Exchange Act of 1934.

Interested persons are invited to submit written data, views and arguments covering the foregoing. Persons desiring to make written submissions should file six copies thereof with the Secretary of the Commission, Washington, D.C. 20549. Copies of the filing with respect to the foregoing and of all written submissions will be available for inspection and copying in the Public Reference Room, 1100 L Street, NW., Washington, D.C. Copies of such filing will also be available for inspection and copying at the principal offices of the above-mentioned self-regulatory organization. All submissions should refer to the file number referenced in the caption above and should be submitted on or before October 3, 1980.

For the Commission by the Division of Market Regulation pursuant to delegated authority.

George A. Fitzsimmons,

Secretary.

September 4, 1980.

[FR Doc. 80-28141 Filed 9-11-80; 8:45 am]

BILLING CODE 8010-01-M

[Rel. No. 17133; SR-PSE-80-13]

Pacific Stock Exchange, Inc.; Order Approving Proposed Rule Change

September 8, 1980.

On July 21, 1980, the Pacific Stock Exchange, Incorporated ("PSE") 301 Pine Street, San Francisco, CA 94104, filed with the Commission, pursuant to Section 19(b)(1) of the Securities Exchange Act of 1934, 15 U.S.C. 78(s)(b)(1) ("Act") and Rule 19b-4 thereunder, copies of a proposed rule change which would authorize the PSE Ethics and Business Conduct Committee to order investigations of possible violations that are within the PSE's disciplinary jurisdiction. The PSE's Board of Governors, its Executive Committee, and its Floor Trading Committee already have the authority to order such investigations.

Notice of the proposed rule change together with the terms of substance of the proposed rule change was given by publication of a Commission Release (Securities Exchange Act Release No. 34-17020, July 29, 1980) and by publication in the Federal Register (45 FR 37973, August 5, 1980). No comments were received with respect to the proposed rule change.

The Commission finds that the proposed rule change is consistent with the requirements of the Act and the rules and regulations thereunder applicable to a national securities exchange, and in particular, the requirements of Section 6 and the rules and regulations thereunder.

It is therefore ordered, pursuant to Section 19(b)(2) of the Act, that the above-mentioned proposed rule change be, and it hereby is, approved.

For the Commission, by the Division of Market Regulation pursuant to delegated authority.

George A. Fitzsimmons,

Secretary.

[FR Doc. 80-28137 Filed 9-11-80; 8:45 am]

BILLING CODE 8010-01-M

[File No. 81-630]

Wacoal Corp.; Order Pursuant to Section 12(h) Exempting Applicant From the Provisions of Section 15(d) of the 1934 Act

September 4, 1980.

Wacoal Corp. ("Applicant") has filed an application, pursuant to Section 12(h) of the Securities Exchange Act of 1934, as amended (the "1934 Act"), for an exemption from the reporting requirements of Section 15(d) of that Act.

On July 30, 1980, a notice was issued of the filing of said application giving interested persons an opportunity to request a hearing and stating that an order disposing of the application might be issued upon the basis of the information stated therein unless a hearing should be ordered. No request for a hearing has been filed and the Commission has not ordered a hearing.

The matter having been considered, it is found that the requested exemption is appropriate in the public interest and consistent with the protection of investors and the purposes fairly intended by the policy and provisions of the 1934 Act.

It Is Ordered, pursuant to Section 12(h) of the 1934 Act, that the exemption from the provisions of Section 15(d) as requested in the application is hereby granted, effective forthwith.

For the Commission, by the Division of Corporation finance, pursuant to delegated authority.

George A. Fitzsimmons,

Secretary.

Service List

Peter Solbert, Esq., Davis, Polk & Wardwell, 1 Chase Manhattan Plaza, New York, New York 10005

George F. Gabel, Jr., Esq., Room 670

[FR Doc. 80-28133 Filed 9-11-80; 8:45 am]

BILLING CODE 8010-01-M

[File No. 81-624]

Warner-Lambert International Capital Corp.; Order Exempting Applicant From Reporting Requirements of Section 13

September 4, 1980.

Warner-Lambert International Capital Corporation (the "Applicant"), has filed an application, pursuant to Section 12(h) of the Securities Exchange Act of 1934, as amended (the "1934 Act"), for an order exempting it from the periodic reporting requirements of Section 13 of that Act with respect to its 4¼% Guaranteed Debentures. Applicant has undertaken to report any event which would materially affect the rights of the holders of such Debentures.

On July 30, 1980, a notice was issued of the filing of said application giving interested persons an opportunity to request a hearing and stating that an order disposing of the application might be issued upon the basis of the information stated therein unless a hearing should be ordered. No request for a hearing has been filed and the Commission has not ordered a hearing.

The matter having been considered, it is found that the requested exemption is appropriate in the public interest, and consistent with the protection of investors and the purposes fairly intended by the policy and provisions of the 1934 Act.

It is ordered, pursuant to Section 12(h) of the 1934 Act, that the exemption from the reporting requirements of Section 13 as requested in the application is hereby effective forthwith.

For the Commission, by the Division of Corporation Finance, pursuant to delegated authority.

George A. Fitzsimmons,

Secretary.

Service List

Joseph B. Cain, Counsel—Corporate Compliance, Warner-Lambert Company, 201 Tabor Road, Morris Plains, New Jersey 07950

Sabrina Dodd, Room F-467

[FR Doc. 80-28134 Filed 9-11-80; 8:45 am]

BILLING CODE 8010-01-M

[Release No. 34-17128; File No. SR-NYSE-80-32]

New York Stock Exchange, Inc.; Self-Regulatory Organizations; Proposed Rule Change

Pursuant to Section 19(b)(1) of the Securities Exchange Act of 1934, 15 U.S.C. 78s (b)(1), as amended by Pub. L. No. 94-29, 16 (June 4, 1975), notice is hereby given that on August 25, 1980, the above-mentioned self-regulatory organization filed with the Securities and Exchange Commission a proposed rule change as follows:

Exchange's Statement of the Terms of Substance of the Proposed Rule Change

The amendment provides for a graduation in Gratuity Fund death benefits from $20,000 to $100,000 and a graduation of contributions from $15 to $75 in five annual steps.

Purpose of Proposed Rule Changes

The Gratuity Fund is designed to provide for families of deceased members of the New York Stock Exchange. The present gratuity payments of $100,000 was increased from $20,000 in 1979. The proposed Constitutional amendments are designed to graduate this payment to $100,000, while at the same time graduating contributions from $15 to $75 in five annual steps. The amendments are designed to allocate more equitably the costs and benefits of the gratuity fund. A clause in the amendment provides that it will only apply to individuals who become members after September 1, 1980 and to prior memberships which are interrupted for periods of longer than three months.

Basis Under the Act

The proposed Constitutional amendments relate to Section 6(b)(4) of the Securities Exchange Act of 1934 in that they provide for the equitable allocation of reasonable dues, fees, and other charges among the members of the Exchange.

Comments Received From Members, Participants or Others

The Exchange has not received comments on the proposed amendments.

Burden on Competition

There will be no burden on competition.

Basis for Rule Change Being Put Into Effect Pursuant to Section 19(b)(3)

In accordance with Section 19(b)(3)(A)(ii) the proposed amendments take effect immediately, as they change a due, fee, or other charge imposed by the New York Stock Exchange, Inc.

At any time within sixty days of the date of filing of these proposed rule changes, the Commission summarily may abrogate the change if it appears to the Commission that such action is necessary or appropriate in the public interest, for the protection of investors, or otherwise in furtherance of the purposes of the Securities Exchange of 1934.

Interested persons are invited to submit written data, views and arguments covering the foregoing. Persons desiring to make written submissions should file six copies thereof with the Secretary of the Commission, Securities and Exchange Commission, Washington, D.C. 20549. Copies of the filing with respect to the foregoing and of all written submissions will be available for inspection and copying in the Public Reference Room, 1100 L Street, N.W., Washington, D.C. Copies of such filing will also be available for inspection and copying at the principal offices of the above-mentioned self-regulatory organization. All submissions should refer to the file number referenced in the caption above

and should be submitted on or before October 3, 1980.

For the Commission, by the Division of Market Regulation pursuant to delegated authority.

George A. Fitzsimmons,

Secretary.

September 8, 1980.

[FR Doc. 80-28237 Filed 9-11-80; 8:45 am]

BILLING CODE 8010-01-M

[Release 34-17129; File No. SR-NASD-78-3; Amdt. One]

National Association of Securities Dealers, Inc.; Self-Regulatory Organizations; Proposed Rule Change

Pursuant to Section 19(b)(1) of the Securities Exchange Act of 1934, 15 U.S.C. 78s(b)(1), as amended by Pub. L. No. 94-29, 16 (June 4, 1975), notice is hereby given that on September 4, 1980, the above-mentioned self-regulatory organization filed with the Securities and Exchange Commission a proposed rule change as follows:

NASD's Statement of the Terms of Substance of the Proposed Rule Change

Text of Proposed Rule Change

This amendment to File No. SR-NASD-78-3 contains various changes in the rules proposals and/or rules amendments therein made. However, the changes in or additions to rules indicated by striking out or italics are to the Association's Rules of Fair Practice as they now exist, not as expressed in the original filing. Thus, the following is the full text of proposed Article II, Section 1 and Article III, Section 36 and proposed amendments to Article III, Sections 8 and 24 of the Rules of Fair Practice which are the subjects of this filing.

Proposed Amendment to Article II, Section 1 of the Rules of Fair Practice

Article II, Section 1 is proposed to be amended by the addition of a new subsection (m). All other subsections of Section 1 remain unchanged.

"Fixed Price Offering"

(m) The term "fixed price offering" means the offering of securities at a stated public offering price or prices, all or part of which securities are publicly offered in the United States or any territory thereof, whether or not registered under the Securities Act of 1933, except that the term does not include offerings of "exempted securities" or "municipal securities" as those terms are defined in Sections 3(a)(12) and 3(a)(29), respectively, of the Securities Exchange Act of 1934 or offerings of redeemable securities of investment companies registered pursuant to the Investment Company Act of 1940 which are offered at prices determined by the net asset value of the securities.

Proposed Amendment to Article III, Section 8 of the Rules of Fair Practice

Article III, Section 8 is proposed to be amended by adding the language indicated by italics and by deleting the language bracketed.

Section 8

(a) A member, [when a member of a selling syndicate or a selling group, shall purchase] *engaged in a fixed price offering, who purchases or arranges the purchase of* securities taken in trade *shall purchase the securities* at a fair market price at the time of purchase[,] or shall act as agent in the sale of such securities[.] *and charge a normal commission therefor.*

(b) When used in this section—

(1) the term "taken in trade" means the purchase by a member as principal, or as agent for the account of another, of a security from a customer pursuant to an agreement or understanding that the customer purchase securities from the member which are part of a fixed price offering.

(2) the term "fair market price" means a price not higher than the price at which the securities would be purchased from the customer or from a similarly situated customer in the ordinary course of business by a dealer in such securities in transactions of similar size and having similar characteristics but not involving a security taken in trade.

(3) the term "normal commission" means an amount of commission which the member would normally charge to that customer or a similarly situated customer in the ordinary course of business in transactions of similar size and having similar characteristics but not involving a security taken in trade.

(c) For purposes of this Section a member shall be

(1) deemed, with respect to securities other than common stocks, to have taken such securities in trade at a fair market price when the price paid is not higher than the highest independent bid for the securities at the time of purchase, if such bid quotations for the securities are readily available;

(2) presumed, with respect to common stocks, to have taken such common stocks in trade at a fair market price when the price paid is not higher than the highest independent bid for the securities at the time of purchase, if such bid quotations for the securities are readily available; and

(3) presumed to have taken a security in trade at a price higher than a fair market price when the price paid is higher than the lowest independent offer for the securities at the time of purchase, if such offer quotations for the securities are readily available.

(d) a member, in connection with every transaction subject to this Section, shall with respect to

(1) common stocks, which are traded on a national securities exchange or for which quotations are entered in an automated quotation system, obtain the necessary bid and offer quotations from the national securities exchange or from the automated quotation system; and

(2) other securities and common stocks not included in subparagraph (1) of this subsection (d) obtain directly or with the assistance of an independent agent bid and offer quotations from two or more independent dealers relating to the securities to be taken in trade or, if such quotations are not readily available, exercise its best efforts to obtain such quotations with respect to securities having similar characteristics and of similar quality as those to be taken in trade.

(e) A member who purchases a security taken in trade shall keep or cause to be kept adequate records to demonstrate compliance with this Section and shall preserve the records for at least 24 months after the transaction. If an independent agent is used for the purpose of obtaining quotations, the member must request the agent to identify the dealers from whom the quotations were obtained and the time and date they were obtained or request the agent to keep and maintain for at least 24 months a record containing such information.

* * * * *

Interpretation of the Board of Governors

Safe Harbor and Presumption of Compliance

Section 8(c)(1) provides that, with respect to a security, other than a common stock, a member will be deemed to have paid the fair market price for a security taken in trade if the price paid is no higher than the highest independent bid for the securities at the time of purchase, if bid quotations are readily available. Section 8(c)(2) provides, with respect to common stock, that a member will be presumed to have paid no more than the fair market price for shares of common stock taken in trade if the price paid for the shares of common stock taken in trade is no higher than the highest independent bid

for such shares at the time of purchase, if bid quotations are readily available. The presumption of compliance contained in subsection (c)(2) may be rebutted by the Association upon a showing that the price paid, in fact, exceeded the fair market price as that term is defined in subsection (b)(2). Inasmuch as a member is presumed to have complied with Section 8 when taking common stock in trade at a price no higher than the highest independent bid, the Association will have a heavier burden of demonstrating noncompliance in such circumstances than it has in the circumstance described below where there is neither a presumption of compliance nor one of noncompliance. Nonetheless, the factors described below in the sections "No Presumptions" and the "Presumption of Noncompliance," will be relevant in determining whether the Association has rebutted the presumption. Particular attention will be directed to the size of the transaction and the relative liquidity of the position.

Presumption of Noncompliance

Section 8(c)(3) establishes a presumption of noncompliance with Section 8 if securities for which offer quotations are readily available are taken in trade at prices higher than the lowest independent offer. While the presumption in Section 8(c)(3) is not conclusive, it may be rebutted by the member only in an exceptional or unusual case. To rebut the presumption of noncompliance, all factors relevant to the transaction must be taken into consideration, including, among other things, whether a customer of a member has given an indication of interest to purchase the securities taken in trade at a higher price; the member's pattern of trading in the securities or comparable securities at the time of the transaction; the member's position in, and the availability of, the securities taken in trade; the size of the transaction; and the amount by which the price paid exceeds the lowest independent offer.

The several factors described in the preceding paragraph will be relevant to determining whether the presumption of noncompliance has been rebutted. The existence of only one such factor, however, will not necessarily be sufficient to meet the heavy burden placed on a member, though in a given case it may be sufficient. In any event, all facts and circumstances must be considered. For example, a member may be able to satisfy the burden of demonstrating that fair market price was paid by showing that the price paid did not exceed the price, less an amount equal to a normal commission on an agency transaction, at which a customer had given the member an indication of interest to purchase the securities, or that the member held a short position in the security purchased, that it desired to cover that short position, that the availability of the security was scarce and that the amount of securities taken in trade could not have been acquired at a lower price.

No Presumptions

In instances when a member takes a security in trade at a price between (but not including) the highest independent bid and the lowest independent offer, or when bid and offer quotations are not readily available, there shall be no safe harbor and there shall be neither a presumption of compliance nor one of noncompliance with Section 8. In such circumstances, whether the price paid is the fair market price will be determined by reference to the definition of fair market price in subsection (b)(2).

Subsection (b)(2) states generally that fair market price is the price a dealer would pay for the amount of securities taken in trade if purchased from the customer in the ordinary course of business but not involving a security taken in trade. Accordingly, the price paid by a member or other dealers for the same security or a comparable security as that taken in trade but not in a transaction involving a security taken in trade will be relevant in determining compliance with Section 8. In comparing such transactions, all facts and circumstances will be considered, including such things as the size of the transactions being compared, the time of each transaction and the difference in price paid. In determining whether fair market price has been paid, other relevant factors, including those set forth above with respect to rubutting the presumption of noncompliance, will also be considered.

Quotations

Subsection 8 (d) and (e) obligate members taking securities in trade to obtain and maintain records of bid and offer quotations. If the securities taken in trade are common stocks that are traded on a national securities exchange or for which quotations are entered in an automated quotation systems, the quotations must be obtained from any such exchange or automated quotation system at the time of purchase.

Quotations for all other securities must be obtained from at least two independent dealers at the time of purchase. While the quotations from two dealers in such circumstances need not be for the specific size of the transaction they must be for a size corresponding generally to the amount of the securities to be taken in trade. Quotations relating only to an odd lot, such as those typically available from a dealer in bonds on a national securities exchange, will not be acceptable for a transaction of a size normally traded by institutions.

If bid and offer quotations required by subsection (d) are not readily available and a member is able to obtain such quotations for comparable securities, such quotations will be treated as though they are quotations for the securities taken in trade in determining whether the "safe harbor" in subsection (c)(1) and the presumptions in subsections (c)(2) and (c)(3) are applicable. In such circumstances, however, the member's determination of what constitutes comparable securities may be challenged.

Adequate Records

If the member purchases securities taken in trade at a price which is no higher than the lowest independent offer as determined according to this Section, it will have kept adequate records if it records the time and date quotations were received, the identity of the security to which the quotations pertain, the identity of the dealer from whom, or the exchange or quotation system from which, the quotations were obtained, and the quotations furnished. If a member uses the services of an independent agent to obtain the quotations and the agent does not disclose the identity of the dealers from whom quotations were obtained, the member will have kept adequate records if it otherwise complies with subsection (e) of Section 8 hereof and it records the time and date it received the quotations from the agent, the identity of the agent, and the quotations transmitted by the agent.

If a member takes a security in trade and pays more than the lowest independent offer, it will have kept adequate records if, in addition to the foregoing records, it keeps records of all relevant factors it considered important in concluding that the price paid for the securities was fair market price.

Proposed Amendment to Article III, Section 24 of the Rules of Fair Practice

Article III, Section 24 is proposed to be amended by adding the language indicated by italics and by deleting the language bracketed.

2Section 24

In connection with the sale of securities which are part of a fixed price offering—

(a) [Selling concessions, discounts, or other allowances, as such, shall be allowed only as consideration for services rendered in distribution and in no event shall be allowed] *a member may not grant or receive selling concessions, discounts, or other allowances except as consideration for services rendered in distribution and may not grant such concessions, discounts or other allowances* to anyone other than a broker or dealer actually engaged in the investment banking or securities business; provided, however, that nothing in this [rule] *Section* shall prevent any member from

(1) selling any such securities to any person, or account managed by any person, to whom it has provided or will provide bona fide research, if the stated public offering price for such securities is paid by the purchaser; or

(2) selling any *such* securit[y]*ies* owned by him to any person at any net price which may be fixed by him unless prevented therefrom by agreement.

(b) The term "bona fide research," when used in this Section, means advice, rendered either directly or through publications or writings, as to the value of securities, the advisability of investing in, purchasing, or selling securities and the availability of securities or purchasers or sellers of securities, or analyses and reports concerning issuers, industries, securities, economic factors and trends, portfolio strategy, and performance of accounts; provided, however, that (1) investment management or investment discretionary services, and (2) products or services that are readily and customarily available and offered to the general public on a commercial basis are not bona fide research.

(c) A member who grants a selling concession, discount or other allowance to another person shall obtain a written agreement from that person that he will comply with the provisions of this Section, and a member who grants such selling concession, discount or other allowance to a nonmember broker or dealer in a foreign country shall also obtain from such broker or dealer a written agreement to comply, as though such broker or dealer were a member, with the provisions of Sections 8 and 36 of this Article and to comply with Section 25 of this Article as that Section applies to a nonmember broker or dealer in a foreign country.

(d) A member who receives an order from any person designating another broker or dealer to receive credit for the sale shall, within 30 days after the end of each calendar quarter, file reports with the Association containing the following information with respect to each fixed price offering which terminated during that calendar quarter: the name of the person making the designation; the identity of the brokers or dealers designated, the identity and amount of securities for which each broker or dealer was designated; the date of the commencement and termination of the offering and such other information as the Association shall deem pertinent.

(e) A member who is designated by its customer for the sale of securities shall keep, and maintain for a period of 24 months, records in such form and manner to show the following information: name of the customer making the designation; the identity and amount of securities for which the member was designated; the identity of the manager or managers of the offering, if any; the date of the commencement of the offering and such other information as the Association shall deem pertinent.

* * * * *

Interpretation of the Board of Governors

Services in Distribution

The proper application of Section 24 requires that, in connection with fixed price offerings, selling concessions, discounts or other allowances be paid only to brokers or dealers actually engaged in the investment banking or securities business and only as consideration for services rendered in distribution.

A dealer has rendered services in distribution in connection with the sale of securities from a fixed price offering if the dealer is an underwriter of a portion of that offering, has engaged in some selling effort with respect to the sale, or has provided or agreed to provide bona fide research to the person to whom or at whose direction the sale is made.

A broker or dealer who has received or retained a selling concession, discount or other allowance may not grant or otherwise reallow all or part of that concession, discount or allowance to anyone other than a broker or dealer engaged in the investment banking or securities business and only as consideration for services rendered in distribution. The improper grant or reallowance of a selling concession, discount or other allowance might occur directly or indirectly through such devices as transactions in volation of Section 8 of this Article, or other indirect means such as those described below.

A member granting a selling concession, discount or other allowance to another person is not responsible for determining whether such other person may be violating Section 24 by granting or reallowing that selling concession, discount or other allowance to another person, unless the member knew, or had reasonable cause to know, of the violation.

Bona Fide Research Exclusion

While Section 24 provides that a member may grant or receive selling concessions, discounts and other allowances only as consideration for services rendered in distribution and may grant such concessions, discounts or other allowances only to brokers or dealers actually engaged in the investment banking or securities business, that Section also states that a member is not prohibited by Section 24 from selling securities at the stated public offering price to persons to whom it provides bona fide research. Accordingly, nothing in Section 24 prohibits a member from providing bona fide research to a customer who also purchases securities from fixed price offerings from the member whether or not there is an express or implied agreement between the member providing the research and the recipient that the member will be compensated for the research in cash, brokerage commissions, selling concessions or some other form of consideration.

The definition of bona fide research is substantially the same as the definition of the term research in Subsection 28(e)(3) of the Securities Exchange Act of 1934, as amended and as interpreted by the Securities and Exchange Commission. Members should refer to interpretations concerning the definition of research under Section 28(e) for guidance. For example, in Securities Exchange Act Release No. 12251 (March 24, 1976), the Commission indicated that items such as "newspapers, magazines and periodicals, directories, computer facilities and software, government publications, electronic calculators, quotation equipment, office equipment, airline tickets, office furniture and business supplies" are the type of products and services which are readily and customarily available and offered to the general public on a commercial basis. Accordingly, such services and products and other similar services and products are not bona fide research for purposes of Section 24.

Moreover, while the provisions in the Section concerning bona fide research are intended to permit money managers to receive bona fide research from persons from whom securities are purchased, it is not intended to enable a money manager, who is also a member, to view its money management services as bona fide research. Accordingly, the

performance of money management or investment discretionary services themselves are expressly excluded from the definition of bona fide research.

Another factor relating to bona fide research is that the research must be "provided by" the member who receives or retains the selling concession, discount or other allowance. Under Section 28(e) of the Securities Exchange Act of 1934, the Commission has stated that the "safe harbor" provided by Section 28(e) only extends to research that is "provided by" the broker to whom brokerage commissions are paid. In determining whether the exclusion for bona fide research under Section 24 is available in any given instance, members should refer to the interpretations of the Commission and its staff of the similar requirement applicable to Section 28(e). In that regard, the Commission, in Securities Exchange Act Release No. 12251, stated that:

Section 28(e) might, under appropriate circumstances, be applicable to situations where a broker provides a money manager with research produced by third parties . . . .

Whether research is provided by the member will depend on all the facts and circumstances surrounding the relationship of the member and the recipient of the research, relying upon interpretations by the Commission and staff with respect to similar questions under Section 28(e).

Indirect Discounts

A member who, itself or through its affiliate, supplies another person with services or products which are readily and customarily available and offered to the general public on a commercial basis or which, in the case of services or products other than bona fide research, are provided by the member or its affiliate to such person or others for cash or for some other agreed upon consideration, and also retains or receives selling concessions, discounts or other allowances from purchases by that person or its affiliate of securities from a fixed price offering is improperly granting a selling concession, discount or other allowance to that person unless the member or its affiliate has been, or has arranged and reasonably expects to be, fully compensated for such services or products from sources other than the selling concession, discount or allowance retained or received on the sale.

A person will be deemed to be providing services or products for cash or other agreed upon consideration if the service or product, or a substantially identical service or product, is provided to any person for cash or for some other agreed upon consideration. A service or product will be deemed to be provided for an agreed upon consideration if there is an express or implied agreement between the person providing the service or product and the recipient thereof calling for the provider of the service or product to be compensated therefor with an agreed upon or mutually understood source and general amount of consideration. Under such circumstances a member or its affiliate providing such service or product would be required to demonstrate that it was fully compensated for the service or product with consideration other than selling concessions, discounts or other allowances received or retained on the sale of securities from fixed price offerings.

A member may show that it or its affiliate received or reasonably expects to receive full consideration, independent of selling concessions, discounts or other allowances, for providing certain services and products, by identifying the arrangement for the consideration (including its source and amount) and, if appropriate, the collection process for obtaining it.

In order to demonstrate that the cash or other consideration is full consideration, records of account should be kept which identify the recipient of the services or products and the amount of cash or other consideration paid or to be paid by such person or its affiliate.

Unless the amount of cash or other consideration agreed upon appears on its face to be unreasonably low, it will not be necessary for the member or its affiliate to demonstrate that the agreed upon price represented fair market price. Likewise, as long as price differentials are based on factors other than the customer's willingness to, or practice of, purchasing securities from the member out of fixed price offerings, it is not necessary, for purposes of Section 24, that the member or its affiliate charge the same amount to each person to whom they provide the same or similar services or products.

Proposed New Section 36 of Article III and Interpretation Thereof

Article III is proposed to be amended by the addition of a new Section 36 and an interpretation thereof.

Section 36

(a) Except as otherwise provided in subsection (d) of this Section, no member engaged in a fixed price offering of securities shall sell the securities to, or place the securities with, any person or account which is a related person of the member unless such related person is itself subject to this Section or is a non-member foreign broker or dealer who has entered into the agreements required by Section 24(c) of this Article.

(b) For purposes of this Section 36, a "related person" of a member includes any person or account which directly or indirectly owns, is owned by or is under common ownership with the member.

(c) A person owns another person or account for purposes of this Section if the person directly or indirectly:

(1) has the right to participate to the extent of more than 25 percent in the profits of the other person, or

(2) owns beneficially more than 25 percent of the outstanding voting securities of the person.

(d) The prohibition contained in subsection (a) does not apply to the sale of securities to, or the placement of securities in, a trading or investment account of a member or a related person of a member after termination of the fixed price offering if the member or the related person of the member has made a bona fide public offering of the securities. A member or a related person of a member is presumed not to have made a bona fide public offering for the purpose of this subsection if the securities being offered immediately trade in the secondary market at a price or prices which are at or above the public offering price.

* * * * *

Interpretation of the Board of Governors Transactions With Related Persons

A member who is acting, or plans to act, as sponsor of a unit investment trust will not violate Section 36 if it accumulates securities with respect to which the member has acted as a syndicate member, selling group member or reallowance dealer in an account of the member or related person of the member if, at the time of accumulation, the member in good faith intends to deposit the securities into the unit investment trust at the public offering price and intends to make a bona fide public offering of the participation unit of that trust. Members engaged in such activity, however, will continue to be subject to the Board of Governor's Interpretation of Article III, Section 1 of the Rules of Fair Practice concerning Free-Riding and Withholding.

While subsection (d) of Section 36 provides that a person is presumed not to have made a bona fide public offering if, immediately following the termination of the fixed price offering, the securities trade at or above the public offering price, there is no

presumption that a person has made a bona fide public offering if, at such time, the securities trade below the public offering price. Whether a person has made a bona fide public offering will be determined on the basis of all relevant facts and circumstances.

NASD's Statement of Purpose of Proposed Rule Change [1]

Section 1 of Article II

No change

Section 8 of Article III and Interpretation Thereof

Proposed Section 8 presently requires that where securities are taken in trade, the member either purchase the securities at a fair market price at the time of purchase or act as agent in their sale. Section 8, which applies to swap transactions, is intended to prevent a practice called "overtrading" whereby a price higher than the fair market price is paid for the securities taken in trade. A transaction constituting an overtrade effectively provides a discount to a customer and is therefore prohibited. The key term in the rule is "fair market price" which is presently defined in the proposals as a price which is not higher than the lowest independent offer for the securities at the time of purchase, if offer quotations for the securities are readily available. If such quotations are not readily available, the fair market price under the proposal may be determined by comparing the security taken in trade with other securities having similar characteristics and of similar quality and for which offer quotations are readily available. The term thus defined was intended to lend some objectivity to the meaning of fair market price, facilitating effective enforcement of Section 8.

Recognizing the Commission's concern that Proposed Section 8 would establish the lowest independent offer as the point below which a swap transaction could not, under any circumstances, be deemed to violate the rule, Section 8 has been revised by deleting that provision and substituting therefor certain new provisions. Revised Section 8(c)(1) creates a "safe harbor" for transactions in securities, other than common stock, effected at or below the highest independent bid; Revised Section 8(c)(2) creates a presumption of compliance with Section 8 for transactions involving common stock taken in trade if the price is at or below the highest independent bid; and Revised Section 8(c)(3), as does proposed Section 8(b)(2), establishes a presumption of noncompliance for all transactions effected above the lowest independent offer. For all transactions effected at a price above the highest independent bid, but not above the lowest independent offer, there is no safe harbor and there is no presumption of compliance or of noncompliance with Section 8. Rather, the appropriateness of transactions effected in this range is to be determined by reference to the new definition of fair market price contained in Revised Section 8(b)(2). That Revised Section defines "fair market price" as a price not higher than the price at which securities would be purchased from the customer or from a similarly situated customer in the ordinary course of business by a dealer in such securities in transactions of similar size and having similar characteristics, but not involving a security taken in trade. In reviewing any transaction in the context of the definition, all relevant facts and circumstances will be considered, including but not limited to, the size and time of the transaction, the price paid in relation to the highest independent bid or the lowest independent offer, the member's pattern of trading in the security or comparable securities, the member's position in the security taken in trade and its general availability.

The Revised Interpretation discusses in greater depth the nature of the "safe harbor" and the presumptions and describes the factors pertinent to a determination of the fair market price where the transaction occurs between the highest independent bid and the lowest independent offer. Additional factors are also included which may serve to rebut the presumption of an overtrade where the transaction is effected at a price above the lowest independent offer. The Board believes that the proposed revisions will not interfere with the process of swapping securities and it will continue to provide an objective standard to aid in the determination of whether an overtrade would occur with respect to a particular transaction.

As is the case with Proposed Section 8, pursuant to Revised Section 8, at the time a member takes a security in trade it must obtain quotations for that security if quotations are readily available. Revised Section 8 makes it clear, however, that if quotations for the security to be taken in trade are not readily available, the member is obligated to exercise its best efforts to obtain quotations with respect to securities having similar characteristics and of similar quality as those to be taken in trade.

The Revised Interpretation to Section 8 also makes clear that for securities other than common stocks traded on a national securities exchange or for which quotations are entered in an automated quotation system the quotations obtained must be for an amount of securities corresponding in size generally to the amount of securities taken in trade. What is intended is for a member who is engaged in an "institutional-size" swap transaction to obtain an "institutional-size" quotation.

Section 24 of Article III and Interpretation Thereof

Proposed Section 24 provides that, in connection with fixed price offerings, members are prohibited from granting or receiving selling concessions, discounts or other allowances except as consideration for services rendered in distribution and are prohibited from granting such concessions, discounts or allowances to persons other than brokers or dealers actually engaged in the investment banking or securities business. The proposed Interpretation of the Board of Governors generally states that in connection with fixed price offerings, a member cannot grant direct or indirect discounts to customers. If a member furnished a customer, who purchased securities from fixed price offerings, with services or products that were commercially available or furnished to anyone for agreed upon consideration, that member would be deemed to have granted such customer an indirect discount unless the member received full consideration for the services and products from sources other than selling concessions, discounts or allowances. Thus, Proposed Section 24 prohibits members from satisfying certain soft dollar research obligations with selling concession dollars.

The Proposed Interpretation to Section 24 provides that a member would be required to furnish services in distribution and that providing customers with research was not, in itself, a service in distribution.

As stated above, several of the witnesses at the hearings argued that research is valuable to, and an integral part of, the securities distribution system and that providing research should be viewed as a service in distribution. Moreover, while generally recognizing that in order to protect the integrity of the fixed price offering system both direct and indirect discounts should be prohibited, those

[1] References to "Proposed" Sections 8 or 24 (or the proposals) and the Interpretations thereof mean the proposed rules approved by the membership on May 8, 1978 and now pending before the Securities and Exchange Commission. References to "Revised" Sections 8 or 24 and Interpretations thereof mean the rules as proposed to be revised as detailed in this filing.

witnesses argued that Proposed Section 24 goes too far by prohibiting a member from being compensated for certain research services and products with selling concession dollars.

The Commission, in its July 3 letter, echoed this concern that the proposed amendments are too rigid in their treatment of research. In this connection, it urged the Association to reconsider, among other things, those aspects of Proposed Section 24 that (1) would prohibit members from using selling concession dollars to satisfy certain soft dollar obligations arising from providing customers with *bona fide* research and (2) would require a member to render some service in distribution in addition to providing research.

Upon reconsideration, the Association's Board decided that Section 24 should be revised to recognize that, for purposes of Section 24, *bona fide* research should be accorded different treatment than all other services and products. This is based on, among other things, the view that furnishing *bona fide* research is a valuable and legitimate service in distribution. The Board also accepts the views of certain witnesses at the Hearings that Congress, in enacting Section 28(e) of the Securities Exchange Act of 1934, recognized the importance of *bona fide* research to the securities markets thereby justifying placing research in a class by itself.

Although the Association has reevaluated Proposed Section 24 and, in response to the Commission's expressed concerns, made certain revisions to the proposals which are described in more detail below, the overall purposes for amending Section 24, as stated in the Association's original filing, remained unchanged. Specifically, revised Section 24 makes it clear that certain forms of indirect discounts are treated no differently than direct discounts and it serves the important function of promoting fairness, full disclosure, and commercial honor by requiring adherence to representations customarily made to issuers, underwriters, dealers and investors in securities distributions made through fixed price offerings. The Revised Proposals continue to achieve these purposes and address concerns raised at the hearings that Proposed Section 24 unfairly discriminated against some brokers and dealers and imposed unnecessary burdens on competition. Revised Section 24 provides that a member does not violate Section 24 by providing *bona fide* research to a person who purchases securities from the member from fixed price offerings and who pays the stated public offering price for the securities purchased. The Revised Interpretation makes it clear that a violation of Section 24 will not occur if a member furnishes *bona fide* research to a customer and pursuant to an express agreement or otherwise the customer pays for that research with selling concessions arising out of purchases from fixed price offerings. In addition, the Interpretation of Revised Section 24 expressly states that providing, or agreeing to provide, *bona fide* research to customers is a service in distribution.

A new Section 24(b) has been added which defines the term *bona fide* research to mean advice, rendered either directly or by written material, as to the value of securities, the advisability of investing in, purchasing, or selling securities, and the availability of securities and customers therefor, or analyses and reports concerning issues, industries, securities, economic factors and trends, portfolio strategy and performance of accounts. Excluded from the definition of *bona fide* research are investment management or investment discretionary services and products or services that are readily and customarily available and offered to the general public on a commercial basis.

As is evident from Revised Section 24 and as is made clear by the Revised Interpretation, the meaning of *bona fide* research is drawn directly from Section 28(e) of the Securities Exchange Act of 1934, as amended, and as interpreted and explained by the Commission and its staff in releases on the subject. Accordingly, services and products that are customarily available and offered to the general public on a commercial basis, such as newspapers, magazines and periodicals, directories, computer facilities and software and other items referred to in the Revised Interpretation do not constitute *bona fide* research.

In order for *bona fide* research to constitute a service in distribution and in order for a member to be compensated in selling concession dollars for *bona fide* research and not violate Section 24, the *bona fide* research must be provided by the member. This does not mean that the research must be produced in-house as long as it is provided by the member to the customer. Reference is made in the Revised Interpretation to an interpretative release of the Commission which addresses when, for purposes of Section 28(e), research is provided by a broker, and the Revised Interpretation states that the Association will rely on existing and future interpretations by the Commission with respect to similar questions under Section 28(e).

There are other, nonsubstantive changes embodied in Revised Section 24. Revised Section 24(c) (formerly Proposed Section 24(b)) has been revised slightly to delete the requirement that a member granting a selling concession, discount or other allowance obtain a written agreement from the recipient that the recipient will make a *bona fide* public offering. That requirement was somewhat inconsistent with a situation, for example, where a member's only sale in an offering was to one customer who designated the member. Proposed Section 36, however, will continue to provide that members are prohibited from retaining securities acquired from fixed price offerings at a price below the public offering price unless that person makes a *bona fide* public offering of the securities.

Revised Section 24(c) retains the requirement that a member granting a selling concession, discount or other allowance to another person obtain a written agreement from that person that he will comply with the provisions of Section 24. As stated in earlier releases, this written agreement may be obtained in blanket form, covering all instances when a member grants a selling concession, discount or other allowance to the other party to the agreement or they may be incorporated in the agreement among underwriters or selling dealers' agreements pertaining to particular offerings.

These additional obligations to obtain agreements are believed to be necessary to facilitate compliance with and enforcement of Section 24. A person receiving a selling concession, discount or other allowance is in the best position to evalute compliance with Section 24, particularly those aspects which require that services in distribution be rendered and those which prohibit reallowances of all or part of the concession, discount or allowance by soft dollar credits and other indirect means. Requiring the agreements specified in subsection (b) will affirmatively remind underwriters and dealers of their obligations in this regard.

Revised Section 24(c) also retains the requirement that a member granting a selling concession, discount or other allowance to a nonmember foreign broker or dealer obtain a written agreement from that broker or dealer to comply with Sections 8 and 36 of Article III. It has been revised, however, to clarify that such a nonmember broker or dealer must agree to comply with Section 25 as it pertains to foreign nonmembers and with Sections 8 and 36 as though it were a member.

Section 36 of Article III and Interpretation Thereof

No change.

NASD's Statement of Basis Under the Act for Proposed Rule Change

No change.

Comments Received From Members, Participants or Others on Proposed Rule Change

No change.

NASD's Statement on Burden on Competition

The Association's stated reasons why Proposed Section 8 (as expressed in its original filing on Form 19b-4) imposed no burdens on competition or imposed only burdens that were necessary or appropriate to further the purposes of the Securities Exchange Act of 1934 are not modified by the revisions to Section 8 filed herewith.

Revised Section 24 expands the circumstances under which a broker or dealer may be compensated for *bona fide* research with selling concessions, discounts or other allowances received or retained from fixed price offerings and expands the description of services in distribution to include *bona fide* research. Inasmuch as these revisions remove the burdens on competition perceived by brokers or dealers who provide research and by certain customers who receive it, the revisions to Section 24 impose no burdens on competition.

On or before October 17, 1980, or within such longer period (i) as the Commission may designate up to 90 days of such date if it finds such longer period to be appropriate and publishes its reasons for so finding or (ii) as to which the above-mentioned self-regulatory organization consents, the Commission will:

(a) By order approve such proposed rule change, or

(b) Institute proceedings to determine whether the proposed rule change should be disapproved.

Interested persons are invited to submit written data, views and arguments concerning the foregoing. Persons desiring to make written submissions should file six (6) copies thereof with the Secretary of the Commission, Securities and Exchange Commission, Washington, D.C. 20549. Copies of the filing with respect to the foregoing and of all written submissions will be available for inspection and copying in the Public Reference Room, 1100 L Street, N.W., Washington, D.C. Copies of such filing will also be available for inspection and copying at the principal office of the above-mentioned self-regulatory organization. All submissions should refer to the file number referenced in the caption above and should be submitted on or before October 27, 1980.

For the Commission by the Division of Market Regulation, pursuant to delegated authority.

George A. Fitzsimmons,

Secretary.

September 8, 1980.

[FR Doc. 80-28238 Filed 9-11-80; 8:45 am]

BILLING CODE 8010-01-M

DEPARTMENT OF THE TREASURY

Office of the Secretary

Advisory Committee on the International Monetary System; Meeting

Notice is hereby given that the Advisory Committee on the International Monetary System will meet at the Treasury Department on September 26, 1980.

The meeting is called in order to obtain the opinions of the participants in the Advisory Committee regarding international monetary questions to be discussed at the annual meeting of the Board of Governors of the International Monetary Fund on September 30–October 3 and the related meeting of the Interim Committee of the Board of Governors.

A determination as required by Section 10(d) of the Federal Advisory Committee Act (Pub. L. 92–463) has been made that this meeting is for the purpose of considering matters falling within the exemption to public disclosure set forth in 5 U.S.C. 552b(c)(1) and that the public interest requires such meeting to be closed to public participation. The matters to be discussed concern the foreign relations of the United States, some of which are the subject of negotiations with other governments. Public disclosure of the matters discussed could be expected to cause identifiable harm to the national security of the United States.

Any comment or inquiry with respect to this notice can be addressed to Ralph Korp, Director, Office of International Monetary Affairs, U.S. Department of the Treasury, Washington, D.C. 20220, (202) 566–5365.

Dated: September 8, 1980.

Robert Carswell,

Deputy Secretary.

[FR Doc. 80-28103 Filed 9-11-80; 8:45 am]

BILLING CODE 4810-25-M

Sunshine Act Meetings

Federal Register
Vol. 45, No. 179
Friday, September 12, 1980

This section of the FEDERAL REGISTER contains notices of meetings published under the "Government in the Sunshine Act" (Pub. L. 94-409) 5 U.S.C. 552b(e)(3).

CONTENTS

	Items
Civil Rights Commission	1
Commodity Credit Corporation	2
Depository Institution Deregulation Committee	3
Equal Employment Opportunity Commission	4,5
Federal Communications Commission	6
Federal Energy Regulatory Commission	7
Federal Maritime Commission	8
Federal Reserve System (Board of Governors)	9
Federal Trade Commission	10,11
National Science Board	12
Railroad Retirement Board	13

1

COMMISSION ON CIVIL RIGHTS.

DATE AND TIME: Monday, September 15, 1980, 1:30-5 p.m.; Tuesday, September 16, 1:30-4:30 p.m.; Wednesday, September 17 (if necessary), 9 a.m.-12 noon.

PLACE: 1121 Vermont Avenue NW., Washington, D.C. 20425.

STATUS: Open to public.

MATTERS TO BE CONSIDERED: September 15, 1980:

I. Approval of agenda.
II. Approval of minutes of last meeting.
III. Review of affirmative action statement update.
IV. Staff director's reports for July and August:
A. Status of funds.
B. Personnel Reports.
C. Office Directors' Reports.
D. Correspondence:
1. Responses from Departments of Defense and Interior re: Marshall Islands.
2. Responses from and letters to EEOC and OFCCP re: data collection problems.
3. Letter from and response to Indiana Advisory Committee re: incidents of racial hatred.
V. Civil rights developments in the Mid-Atlantic region.

September 16, 1980, 1:30-4:30 p.m.:

VI. Interim appointment to South Dakota Advisory Committee.
VII. Transmittal of California Advisory Committee Report on State Employment.
VIII. Transmittal of Kansas Advisory Committee Report on Police Community Relations in Wichita.
IX. Action re: Rocky Mountain States' Report on Energy and Civil Rights.
X. Action re: Washington Advisory Committee Report on Equal Employment Opportunity in Tacoma.

September 17, 1980 (if necessary) 9 a.m.-12 noon:

XI. Action re: Alaska Advisory Committee Report Entitled Employment in Alaska.
XII. Memorandum on Six Month Operating Plans.
XIII. Memorandum on State Advisory Committee Chairs Conference
XIV. Review of HEW Enforcement of Title IX.

PERSONS TO CONTACT FOR FURTHER INFORMATION: Charles Rivera or Barbara Brooks, Press and Communications Division, 254-6697.

[S-1692-80 Filed 9-10-80; 2:31 pm]
BILLING CODE 6335-01-M

2

COMMODITY CREDIT CORPORATION.

TIME AND DATE: 2 p.m., September 19, 1980.

PLACE: Room 218-A, Administration Building, U.S. Department of Agriculture, Washington, D.C.

STATUS: Open, except for item 8 which will be closed to the public.

MATTERS TO BE CONSIDERED:

1. Minutes of CCC meeting on May 15, 1980.
2. Docket VCP 98a re: Milk price support program, 1980-81.
3. Resolution re: Amendment of bylaws of Commodity Credit Corporation.
4. Docket CZ 153, Revision 3, Amendment 1 re: Policy with regard to insurance of equipment and facilities and of commodities owned, pooled, and under loan.
5. Docket CX 316 re: Financial arrangements of CCC under its intermediate credit export sales program for foreign market development facilities.
6. Docket CX 308(b) re: Guarantee arrangements required by CCC under its export credit guarantee program.
7. Resolution 18, CZ 266 re: Commodities available for Public Law 480 during fiscal year 1981.
8. Docket WNP 307 re: Purchase and distribution of agricultural commodities and other foods for domestic distribution with section 32 funds, fiscal year 1981.

CONTACT PERSON FOR MORE INFORMATION: Bill Cherry, Secretary, Commodity Credit Corporation, Room 202-W, Administration Building, U.S. Department of Agriculture, Washington, D.C. 20013; telephone (202) 447-7583.

[S-1691-80 Filed 9-10-80, 11:06 am]
BILLING CODE 3410-05-M

3

DEPOSITORY INSTITUTIONS DEREGULATION COMMITTEE.

"FEDERAL REGISTER" CITATION OF PREVIOUS ANNOUNCEMENT: 45 FR 58745, September 4, 1980.

PREVIOUSLY ANNOUNCED TIME AND DATE OF THE MEETING: 2:30 p.m., Tuesday, September 9, 1980.

CHANGES IN THE MEETING: Addition of the following open item(s) to the meeting: Consideration of early withdrawal penalties.

CONTACT PERSON FOR MORE INFORMATION: Mr. Joseph R. Coyne, Public Information Officer (202) 452-3204.

Dated: September 10, 1980.

Normand R. V. Bernard,
Executive Secretary of the Committee.

[S-1690-80 Filed 9-10-80; 3:36 p.m.]
BILLING CODE 6210-01-M

4

EQUAL EMPLOYMENT OPPORTUNITY COMMISSION.

"FEDERAL REGISTER" CITATION OF PREVIOUS ANNOUNCEMENT: S-1625-80.

PREVIOUSLY ANNOUNCED TIME AND DATE OF MEETING: 9:30 a.m. (eastern time), Tuesday, September 2, 1980.

CHANGE IN THE MEETING:

The following matter was added to the agenda for the Open portion of the meeting:
Freedom of Information Appeal No. 80-5-FOIA-282
A majority of the entire membership of the Commission determined by recorded vote that the business of the Commission required this change and that no earlier announcement was possible.
In favor of change: Daniel E. Leach, Vice Chair; Ethel Bent Walsh, Commissioner; Armando M. Rodriguez, Commissioner;
J. Clay Smith, Jr., Commissioner.

CONTACT PERSON FOR MORE INFORMATION: Treva I. McCall, Acting Officer, Executive Secretariat, at (202) 634-6748.

This Notice issued September 2, 1980.

[S-1688-80 Filed 9-10-80; 10:15 am]
BILLING CODE 6750-06-M

5

EQUAL EMPLOYMENT OPPORTUNITY COMMISSION.

TIME AND DATE: 9:30 a.m. (eastern time), Tuesday, September 16, 1980.

PLACE: Commission conference room 5240, fifth floor, Columbia Plaza Office Building, 2401 E Street NW., Washington, D.C. 20506.

STATUS: Part will be open to the public and part will be closed to the public.

MATTERS TO BE CONSIDERED: Open to the public.

1. Proposed Revision of Guidelines on Discrimination because of National Origin.
2. Freedom of Information Act Appeal No. 80-6-FOIA-335, involving a request for information contained in open age discrimination case file.
3. Freedom of Information Act Appeal No. 80-6-FOIA-341, involving a request by an employer for investigative material in an open EPA charge file.
4. Report on Commission Operations by the Executive Director.

Closed to the public:

1. Litigation Authorization; General Counsel Recommendations.
2. Freedom of Information Act Appeal Nos. 80-4-FOIA-233 and 80-5-FOIA-251.
3. Freedom of Information Act Appeal No. 80-7-FOIA-377.

Note.—Any matter not discussed or concluded may be carried over to a later meeting.

CONTACT PERSON FOR MORE INFORMATION: Treva I. McCall, Acting Executive Officer, Executive Secretariat, at (202) 634-6748.

This notice issued September 9, 1980.

[S-1687-80 Filed 9-10-80; 10:15 am]

BILLING CODE 6570-06-M

6

FEDERAL COMMUNICATIONS COMMISSION.

PREVIOUSLY ANNOUNCED TIME AND DATE OF MEETING: 9:30 a.m., Tuesday, September 9, 1980, (special open meeting).

PLACE: Room 856, 1919 M Street NW., Washington, D.C.

STATUS: Open Commission meeting.

CHANGES IN THE MEETING: The following item deleted and rescheduled as part of the Broadcast regular open meeting, September 10, 1980.

Agenda, Item Number, and Subject

Broadcast—5—*Title:* Applications by Hubbard Broadcasting, Inc. for permission to construct new UHF television translator stations at the following Minnesota communities: Aitkin (BPTT-790122IE), Alexandria (BPTT-790307IK), Brainerd (BPTT-780906IC), Donnelly & Herman (BPTT-790314IA), Little Falls (BPTT-3619), Long Prairie (BPTT-3621), Marshall (BPTT-781215IE), St. James (BPTT-790306IA), Wadena (BPTT-790215IX), Willmar (BPTT-781016IB), Worthington (BPTT-781227IG). *Summary:* The applicant seeks these translators to rebroadcast the signal of its Stations KSTP-TV, St. Paul, Minnesota to the respective communities which lie beyond KSTP-TV's Grade B contour. Petitions to deny filed by three television licensees raise questions concerning economic injury, need for these translators, adverse impact upon the development of local television stations and applicant's relationship with the ABC network.

The prompt and orderly conduct of Commission business did not permit prior notice of this change.

The meeting may be continued the following work day to allow the Commission to complete appropriate action.

Additional information concerning this meeting may be obtained from Edward Dooley, FCC Public Affairs Office, telephone number (202) 254-7674.

Issued: September 9, 1980.

[S-1693-80 Filed 9-10-80; 2:31 pm]

BILLING CODE 6712-01-M

7

FEDERAL ENERGY REGULATORY COMMISSION.

September 10, 1980.

TIME AND DATE: 10 a.m., September 17, 1980.

PLACE: Room 9306, 825 North Capitol Street, NE., Washington, D.C. 20426.

STATUS: Open.

MATTERS TO BE CONSIDERED: Agenda.

Note.—Items listed on the agenda may be deleted without further notice.

CONTACT PERSON FOR MORE INFORMATION: Kenneth F. Plumb, Secretary; telephone (202) 357-8488.

This is a list of matters to be considered by the Commission. It does not include a listing of all papers relevant to the items on the agenda; however, all public documents may be examined in the Division of Public Information.

Power Agenda—462nd Meeting, September 17, 1980, Regular Meeting (10 a.m.)

CPA-1. Docket Nos. ER80-411, ER80-417, and ER80-438, Florida Power & Light Co.
CPA-2. Docket No. ER79-539, Central Maine Power Co.
CPA-3. Docket No. ER80-575, Illinois Power Co.
CPA-4. Docket No. ER80-108, Missouri Public Service Co.

Miscellaneous Agenda—462nd Meeting, September 17, 1980, Regular Meeting

CAM-1. Docket No. RA80-41, Eagle's Chevron Service.
CAM-2. Docket No. RA79-14, Largo Drilling Co., Inc.

Gas Agenda—462nd Meeting, September 17, 1980, Regular Meeting

CAG-1. Docket No. RP75-73 (AP79-4), Texas Eastern Transmission Corp.
CAG-2. Docket Nos. CI77-412, et al., Phillips Petroleum Co.
CAG-3. Docket No. CI79-220, Exxon Corp.; Docket No. CI80-457, Aminoil U.S.A. Inc.
CAG-4. Docket No. CP78-212, Transcontinental Gas Pipe Line Corp.; Docket No. CP77-417, Transcontinental Gas Pipe Line Corp.;
CAG-5. Docket No. CP75-93 (remand), Black Marlin Pipeline Co.
CAG-6. Docket No. CP79-242, Transcontinental Gas Pipe Line Corp. and Tennessee Gas Pipeline Co., a division of Tenneco Inc.; Docket No. CP80-44, Consolidated Gas Supply Corp., Docket No. CP80-100, Tennessee Gas Pipeline Co., a Division of Tenneco Inc.
CAG-7. Docket No. CP80-439, Sea Robin Pipeline Co.
CAG-8. Docket Nos. CP80-222, et al., El Paso Natural Gas Co., Clay Basin Storage Co., Northwest Pipeline Corp., and Mountain Fuel Resources, Inc.
CAG-9. Docket No. CP80-400, Columbia Gas Transmission Corp.
CAG-10. Docket No. CP80-464, Columbia Gas Transmission Corp.
CAG-11. Docket No. CP80-252, Natural Gas Pipeline Co. of America.
CAG-12. Docket No. CP80-140, Transcontinental Gas Pipe Line Corp.

Power Agenda—462nd Meeting, September 17, 1980, Regular Meeting

I. Licensed Project Matters

P-1. Docket No. EL79-17, Swan Lumber Co.

II. Electric Rate Matters

ER-1. Docket No. ER80-536, Gulf Power Co.
ER-2. Docket No. ER80-559, Kansas Power & Light Co.
ER-3. Docket No. ER80-573, Southwestern Public Service Co.
ER-4. Docket No. ER80-572, Dayton Power & Light Co. and Cincinnati Gas & Electric Co.
ER-5. Docket No. ER80-569, Yankee Atomic Electric Co.; Docket No. ER80-570, Public Service Co. of New Hampshire
ER-6. Docket No. ER80-574, Mantahala Power & Light Co.
ER-7. Docket No. ER80-549, Arkansas Power & Light Co.
ER-8. Docket Nos. ER80-557 and ER80-558, Philadelphia Electric Co.
ER-9. Docket No. ER80-568, Kanamha Valley Power Co.
ER-10. Docket No. ER80-571, Toledo Edison Co.
ER-11. Docket No. ER80-563, Southern Indiana Gas & Electric Co.
ER-12. (A) Docket No. E-9563, Bonneville Power Administration (Wheeling Rates); (B) Docket No. EF80-2011, Bonneville Power Administration (system rates); (C) Docket No. EF79-4011, Southwestern Power Administration (system rates); (D) Docket No. EF79-4021, Southweater Power Administration (Sam Rayburn Dam Project).

ER-13. Docket No. ER76-320, The Connecticut Light & Power Co.
ER-14. Docket Nos. ER80-520 and EL80-8, Montaup Electric Co.

Miscellaneous Agenda—462nd Meeting, September 17, 1980, Regular Meeting

M-1. Docket No. RM79-28, amendments to Part 32 of the regulations under the Federal Power Act; regulation governing interchange energy transmission rates for section 202(c) emergencies.
M-2. Reserved.
M-3. Reserved.
M-4. Docket No. RM80-18, Treatment under the incremental pricing program of natural gas used as boiler fuel to raise steam which forms an integral step in the manufacturing process for fertilizer.
M-5. Docket No. RM80-33, Final rules for part 270, subpart B, sections 270.201, 270.202 and 270.204.
M-6. Docket No. RM80-14, Final regulations under section 105 and 106(b) of the Natural Gas Policy Act of 1978.
M-7. Docket No. RM80-47, regulations implementing section 110 of the Natural Gas Policy Act of 1978 and establishing policy under the Natural Gas Act.
M-8. Docket No. RM80- , delegation of authority under section 206(d) of the Natural Gas Policy Act to OPPR director.
M-9. Docket No. RA80-93, Petroleum Delivery Service, Inc.

Gas Agenda—462nd Meeting, September 17, 1980, Regular Meeting

I. Pipeline Rate Matters

RP-1. Docket No. OR78-5, Northville Dock Pipe Line Corp. and Consolidated Petroleum Terminal, Inc.
RP-2. Docket No. RP77-107 and RP78-68, United Gas Pipe Line Co.
RP-3. Docket Nos. RP74-86 and RP76-97, Gulf Energy & Development Corp.
RP-4. Docket Nos. RP75-91, et al., Consolidated Gas Supply Corp.; Docket No. RP79-22 (storage), Consolidated Gas Supply Corp.
RP-5. Docket No. RP78-20, Columbia Gas Transmission Corp.

II. Producer Matters

CI-1. Docket Nos. CI77-298 and IN79-3, Tenneco Inc., et al. Docket Nos. G-3973, G-7360, G-11936, G-11943 and G-11946, Mobil Oil Corp.

III. Pipeline Certificate Matters

CP-1. Docket No. RP75-79 (phase II), Lehigh Portland Cement Co. v. Florida Gas Transmission Co.; Docket No. CP77-44, Abitibi Corp. v. Florida Gas Transmission Co.
CP-2. Docket No. CP74-94 (phase I and phase II), United Gas Pipe Line Co., complainant, v. Billy J. McCombs, R. James Stillings, d/b/a/ Gastill Co., David A. Onsgard, Basin Petroleum Corp., Louis H. Haring, Jr., National Exploration Co., E. I. du Pont De Nemours & Co., Bill Forney, Sr., and Bill Forney, Inc., respondents.
CP-3. Docket No. CP74-314, El Paso Natural Gas Co., Docket No. CP76-327, Northwest Pipeline Corp., Docket No. CI77-526, Sun Oil Co., et al.
CP-4. Docket Nos. CP80-43, CP66-110, CP70-19, CP70-100, CP71-222 and CP71-299, Great Lakes Gas Transmission Co.
CP-5. Docket No. CP78-161, Consolidated Gas Supply Corp.
CP-6. Docket No. CP79-264, Northern Natural Gas Co. division of Internorth, Inc., Florida Gas Transmission Co. and Southern Natural Gas Co.
CP-7. Docket Nos. CP78-123, et al., Northwest Alaskan Pipeline Co., Docket No. CP78-124, Northern Border Pipeline Co.; Docket No. CP79-60, Pacific Gas Transmission Co.
CP-8. Docket No. SA80-59, Southern Natural Gas Co.
CP-9. Docket No. CP80-268, Equitable Gas Co.
CP-10. Docket Nos. CP78-253 and CP78-254, Northwest Pipeline Corp.; Docket No. CI80-33, IGC Production Co.
CP-11. Docket No. CP80-338, Transcontinental Gas Pipe Line Corp. and United Gas Pipe Line Co.
CP-12. Docket No. CP80-334, Arkansas Louisiana Gas Co.
CP-13. Docket No. CP78-256, Algonquin Gas Transmission Co. and Algonquin LNG.

Kenneth F. Plumb,
Secretary

[S-1694-80 Filed 9-10-80; 3:55 pm]
BILLING CODE 6450-85-M

8

FEDERAL MARITIME COMMISSION.

TIME AND DATE: 9 a.m., September 18, 1980.

PLACE: Hearing Room One, 1100 L Street NW., Washington, D.C. 20573.

STATUS: Parts of the meeting will be open to the public. The rest of the meeting will be closed to the public.

MATTERS TO BE CONSIDERED: Portions open to the public:

1. Daniel F. Young, Inc.—Independent Ocean Freight Forwarder License No. 656—Possible violation of the Shipping Act, 1916.
2. Sovereign International Corp.—Possible violations of the Shipping Act, 1916.
3. Agreement No. 10137-6: Extension of term of approval of Barber Blue Sea Line Joint Service.
4. Japanese Pooling Agreements.
5. Docket No. 79-86: Japan/Korea-Atlantic and Gulf Freight Conference Rules Pertaining to Chassis Availability and Demurrage Charges that Result when Chassis are not Made Available—Petition to intervene of New York Terminal Conference.
6. Docket No. 77-13: First International Development Corporation v. Ships Overseas Services, Inc.—Petition of respondent for reconsideration.

Portion closed to the public:

1. Docket No. 79-69: Richmond Transfer and Storage Co., d.b.a. Richmond Export Service and International Cargo Services—Possible Violations of Sections 16, First, and 17, Shipping Act and General Order 15, 46 CFR 533—Consideration of the record.

CONTACT PERSON FOR MORE INFORMATION: Francis C. Hurney, Secretary (202) 523-5725.

[S-1682-80 Filed 9-10-80, 8:59 am]
BILLING CODE 6730-01-M

9

BOARD OF GOVERNORS OF THE FEDERAL RESERVE SYSTEM.

TIME AND DATE: 10 a.m., Wednesday, September 17, 1980.

PLACE: Board Building, C Street entrance between 20th and 21st Streets NW., Washington, D.C. 20551.

STATUS: Open

MATTERS TO BE CONSIDERED: Summary Agenda: Because of their routine nature, no substantive discussion of the following items is anticipated. These matters will be resolved with a single vote unless a member of the Board requests that an item be moved to the discussion agenda.

1. Proposed amendment to Regulation F (Securities of Member State Banks) relating to instructions for the preparation of supervisory financial reports and the content of financial statements. (Proposed earlier for public comment; Docket No. R-0269.)
2. Proposed Publishing Contract for the Federal Reserve Regulatory Service.

Discussion Agenda:

1. Proposed regulations to implement section 5 of the International Banking Act of 1978 relating to interstate banking restrictions. (Proposed earlier for public comment; Docket No. R-0258.)
2. Report to the Congress regarding implementation of the International Banking Act.
3. Proposed amendment to Regulation E (Electronic Fund Transfers) to exempt certain terminals from providing the item of information otherwise required on terminal receipts and amendments to address compulsory use of EFT, family transfer plans, and documentation requirements.
4. Any agenda items carried forward from a previously announced meeting.

Note.—This meeting will be recorded for the benefit of those unable to attend. Cassettes will be available for listening in the Board's Freedom of Information Office, and copies may be ordered for $5 per cassette by calling (202) 452-3684 or by writing to: Freedom of Information Office, Board of Governors of the Federal Reserve System, Washington, D.C. 20551.

CONTACT PERSON FOR MORE INFORMATION: Mr. Joseph R. Coyne, Assistant to the Board (202) 452-3204.

Dated: September 9, 1980.

Griffith L. Garwood,
Deputy Secretary of the Board.

[S-1685-80 Filed 9-10-80; 9 a.m.]
BILLING CODE 6210-01-M

10

FEDERAL TRADE COMMISSION.

TIME AND DATE: 10 a.m., Wednesday, September 17, 1980.

PLACE: Room 432, Federal Trade Commission Building, Sixth Street and Pennsylvania Avenue NW., Washington, D.C. 20580.

STATUS: Open.

MATTERS TO BE CONSIDERED: Consideration of Advance Notice of Proposed Rulemaking on State Restrictions on Vision Care Providers: the Effects on Consumers ("Eyeglasses II").

CONTACT PERSON FOR MORE INFORMATION: Pamela F. Richard, Office of Public Information: (202) 523-3830; recorded message: (202) 523-3806.

[S-1683-80 Filed 9-10-80; 8:59 am]

BILLING CODE 6750-01-M

11

FEDERAL TRADE COMMISSION.

TIME AND DATE: 2 p.m., Thursday, September 18, 1980.

PLACE: Room 532, (open); Room 540, (closed); Federal Trade Commission Building, Sixth Street and Pennsylvania Avenue NW., Washington, D.C. 20580.

STATUS: Parts of this meeting will be open to the public. The rest of the meeting will be closed to the public.

MATTERS TO BE CONSIDERED: Portions open to public:

(1) Oral Argument in Indiana Federation of Dentists, Docket 9118.

Portions closed to the public:

(2) Executive Session to discuss Oral Argument in Indiana Federation of Dentist, Docket 9118.

CONTACT PERSON FOR MORE INFORMATION: Pamela F. Richard, Office of Public Information: (202) 523-3830; recorded message: (202) 523-3806.

[S-1684-80 Filed 9-10-80; 8:59 am]

BILLING CODE 6760-01-M

12

NATIONAL SCIENCE BOARD.

DATE AND TIME:

September 18, 1980 1 p.m. Open session.
September 19, 1980 9 a.m. Closed session.

PLACE: 1800 G Street NW., Washington, D.C.

STATUS: Parts of this meeting will be open to the public. The rest of the meeting will be closed to the public.

MATTERS TO BE CONSIDERED OPEN SESSION:

1. Minutes—Open Session—218th Meeting.
2. Chairman's Items.
3. Director's Report:
   a. Report on Grant and Contract Activity—August 21–September 17, 1980.
   b. Organizational and Staff Changes.
   c. Congressional and Legislative Matters.
   d. NSF Budget for Fiscal Year 1981.
   e. Other Items.
4. Board Committees—Reports on Meetings.
5. NSF Advisory Groups and Other Events:
   a. Reports on Meetings.
   b. Representation at Future Meetings.
6. Board Representation at Future Site Visits to Materials Research Laboratories.
7. Program Review—Computer Sciences.
8. Proposed Reorganization of NSF.
9. Grants, Contracts, and Programs.
10. Other Business.
11. Next Meeting National Science Board, October 16–17, 1980.

Closed session:

A. Minutes—Closed Session—218th Meeting.
B. Grants, Contracts, and Programs.
C. NSB and NSF Staff Nominees.
D. NSB Annual Reports.
E. NSF Budgets for Fiscal Year 1982 and Subsequent Years.
F. Science and Engineering Education Report to the President.
G. Personnel Implications of Proposed Reorganization of NSF.

CONTACT PERSON FOR MORE INFORMATION: Miss Vernice Anderson, Executive Secretary (202) 357-9582.

[S-1688-80 Filed 9-10-80; 10:17 am]

BILLING CODE 7555-01-M

13

RAILROAD RETIREMENT BOARD.

TIME AND DATE: 9 a.m., September 18, 1980.

PLACE: Board's meeting room, eighth floor, headquarters building, 844 Rush Street, Chicago, Illinois 60611.

STATUS: Part of this meeting will be open to the public. The rest of the meeting will be closed to the public.

MATTERS TO BE CONSIDERED: Portion open to the public:

(1) OPM survey of Bureau of Unemployment and Sickness Insurance.
(2) OPM study of personnel management at the Board.
(3) Headquarters relocation.
(4) Travel allowances.
(5) Appeal on computation of annuity, Anastasia Mackus.
(6) Appeal of nonwaiver of overpayment, Gary H. Lilja.

Portion closed to the public:

(A) Appeal from referee's denial of disability annuity, Prince Phillips.

CONTACT PERSON FOR MORE INFORMATION: R. F. Butler, Secretary of the Board, COM No. 312-751-4920, FTS No. 387-4920.

[S-1689-80 Filed 9-10-80; 10:27 am]

BILLING CODE 7905-01-M

federal register

Friday
September 12, 1980

Part II

Department of Health and Human Services

Food and Drug Administration

Hematology and Pathology Devices: General Provisions and Classification; Final Rules

DEPARTMENT OF HEALTH AND HUMAN SERVICES

Food and Drug Administration

21 CFR Part 864

[Docket No. 78N-1833]

Hematology and Pathology Devices: General Provisions

AGENCY: Food and Drug Administration.

ACTION: Final rule.

SUMMARY: The Food and Drug Administration (FDA) is issuing a final rule regarding general provisions applicable to the classification of hematology and pathology devices. The preamble to this rule responds to general comments received on the proposals regarding classification of hematology and pathology devices. This action is being taken under the Medical Device Amendments of 1976.

EFFECTIVE DATE: October 14, 1980.

FOR FURTHER INFORMATION CONTACT: Kaiser Aziz, Bureau of Medical Devices (HFK-440), Food and Drug Administration, 8757 Georgia Ave., Silver Spring, MD 20910, 301-427-7550.

SUPPLEMENTARY INFORMATION: In the Federal Register of September 11, 1979 (44 FR 52590), FDA published a proposed regulation containing general provisions applicable to the classification of hematology and pathology devices. The preamble to the regulation described the development of the proposed regulations classifying hematology and pathology devices and the activities of the Hematology and Pathology Device Section of the Clinical Chemistry and Hematology Devices Panel (formerly the Hematology Device Classification Panel) and the Clinical Chemistry Device Section of the Clinical Chemistry and Hematology Devices Panel (responsible for advising FDA on pathology devices, formerly the responsibility of the Pathology Device Classification Panel), an FDA advisory committee that makes recommendations to FDA concerning the classification of hematology and pathology devices. FDA also published in that issue of the Federal Register individual proposed regulations to classify 109 hematology and pathology devices. FDA provided a period of 60 days for interested persons to submit written comments on these proposals.

FDA received several general comments regarding the process used for publishing the classification proposals for hematology and pathology devices. The agency is responding to these general comments below.

1. A comment noted that the Panels recommended that certain devices be exempt from the complete good manufacturing practice (GMP) regulation in Part 820, and that when the agency provided exemption from the GMP requirements, the exemption did not extend to § 820.180 and § 820.198, relating to records and complaint files. The comment contended that the agency should grant a complete, rather than a partial, exemption from the GMP requirements.

FDA disagrees with this comment. In a basic policy decision, the agency has determined that no exemptions will be granted for any device from two GMP requirements in Part 820—§ 820.180, regarding general requirements concerning records, and § 820.198, regarding complaint files. The agency believes that, to protect the public health and to carry out its responsibilities under the Federal Food, Drug, and Cosmetic Act (the act), manufacturers must maintain complaint files and FDA must have access to these files. Further explanation of the agency's policy regarding granting of exemptions from the GMP requirements is in the proposed general provisions for hematology and pathology devices, in the proposed regulations and final regulations for each device that the Panels or comments recommended be exempt from the GMP regulation, and in the section later in this preamble entitled, "Exemptions for Class I Devices."

2. One comment noted that, although a manufacturer may be exempt from all GMP requirements except §§ 820.180 and 820.198, § 820.180 requires that manufacturers maintain for at least 2 years all the records required by the GMP regulation. The comment asked whether maintenance of batch records, component testing records, and other quality control records will be required for devices exempt from the GMP requirements except for §§ 820.180 and 820.198.

FDA disagrees with the comment's interpretation of the exemption. Section 820.198 requires, among other things, that a manufacturer shall maintain a complaint file, investigate complaints and maintain records of complaint investigations, and keep copies of these complaint records at the device manufacturing location. Section 820.180 requires, among other things, that the manufacturer maintain required records for 2 years from date of release of the device and that these records be available for review and copying by FDA employees. The only records required to be kept by a manufacturer of a device exempt from all GMP requirements except §§ 820.180 and 820.198 are complaint files and related records under § 820.198, and only these files and records are subject to mandatory FDA inspection. The requirements in § 820.181 through § 820.195 concerning device master records, batch history records, etc., need not be met for devices exempt from the GMP requirements except for §§ 820.180 and 820.198. If a manufacturer voluntarily meets these recordkeeping requirements, FDA encourages, but does not require, the manufacturer to grant access to these records.

3. Two comments suggested that FDA failed to consider the economic impact of these regulations. The comments suggested that FDA provide an estimate of the added health care costs that will result from these regulations and that this estimate be provided to the public before the promulgation of final regulations.

FDA rejects this comment. As required by Executive Order 12044, the agency has analyzed the economic effects of the proposed regulations and has determined that the proposed rulemaking does not involve major economic consequences as defined in that order. As stated in the proposed regulation, a copy of this analysis has been filed with the Hearing Clerk, Food and Drug Administration, and is available to the public.

4. One comment noted the presence of distinct differences in the manner in which the proposed regulations were written that raise questions as to the meaning of the regulations. (No examples were provided by the comment).

FDA disagrees with the comment. The agency is not aware of significant differences in the language of any of the proposed regulations compared to others. The agency intended to issue a consistent set of regulations. Minor inadvertent discrepancies have been noted and are being addressed in the final individual regulations.

5. One comment objected to, and suggested deletion of, a description of the uses of the device in the device identification sections of several proposed regulations. The comment suggested that such a practice implies a performance standard or that use of the device for a purpose other than that specified in the identification would result in its being considered not to be a medical device. The comment suggested that the uses of the device should be left to the standards writing process. Similar comments were received on a number of

individual proposals and are responded to here.

FDA agrees that, during the standards development process, labeling specifying the uses of each device classified into class II will be subjected to more specific requirements than now exist under section 502 of the act (21 U.S.C. 352) and §§ 801 or 809.10 of the regulations (21 CFR 801 or 809.10). However, because the regulations classifying hematology and pathology devices concern products the basic function of which is use in diagnosis, the agency believes that it is appropriate to include a brief general description of the major diagnostic uses of each device in its identification. FDA disagrees with the comment's argument that uses of a device that are not described in a regulation are not subject to regulation as devices.

6. One comment suggested that the device registration and listing classification name and product code issued by FDA for use by industry to accomplish device listing should be used by FDA as part of the identification of the device in its classification regulation.

Although the suggestion in the comment has merit, practical problems prevent its adoption. Some manufacturers have become accustomed to identifying a device by its registration and listing name and three letter code used for purposes of device listing under section 510 of the act (21 U.S.C. 360). However, FDA is still making changes in the names and identifications of generic types of devices in the classification regulations for devices for which final regulations have not been published. Because FDA has not used the present device registration and listing names in the proposed and final classification regulations, FDA has prepared an index of names of generic types of medical devices used in classification regulations to aid a manufacturer in matching its device with the proper classification regulation. The index shows the device registration and listing product code for each device reviewed by a classification panel and the corresponding name of the generic type of device and classification panel in which the device classification will be published in the Federal Register. The agency announced the availability of this index in the Federal Register of March 6, 1979 (44 FR 12269). If necessary, this index will be updated and the availability of the revised index will be reannounced in the Federal Register. Because this index is available, FDA believes that it is unnecessary to include or cross reference the present device registration and listing name and product code in the classification regulations. In the future, following publication of most of the device classification regulations, the agency will revise and re-issue the device registration and listing product code, so that the device names to be used for registration and listing correspond to the device names in the final device classification regulations.

7. One comment suggested that the final regulations explain that not all the hematology and pathology devices being classified are diagnostic products. Therefore, § 809.10, which provides the labeling requirements for in vitro diagnostic products, does not apply to all devices listed in the hematology and pathology device classification regulations. The comment suggested that FDA identify those hematology and pathology devices where the requirements of §809.10 do not apply.

FDA agrees with the comment. The requirements of § 809.10 do not apply to the following hematology and pathology devices; however, these devices are subject to the labeling requirements in § 801:

Section and device		Docket No.
864.9100	Container for the collection and processing of blood and blood components	78N-1919
864.9125	Vacuum-assisted blood collection system	78N-1920
864.9145	Processing system for frozen blood	78N-1921
864.9195	Blood mixing and weighing device	78N-1925
864.9205	Blood and plasma warming device	78N-1926
864.9245	Automated blood cell separator	78N-1928
864.9575	Environmental chamber for storage of platelet concentrate	78N-1936
864.9700	Blood storage refrigerator and blood storage freezer	78N-1939
864.9750	Heat sealing device	78N-1940
864.9875	Transfer set	78N-1942

8. A comment requested that the FDA clarify that, although a regulation to require premarket approval applicable to the products described in section 515(b)(1)(A)(B) may be issued during the 30 month grace period following final classification, the submission of a premarket approval application will not actually be required until the 30 month grace period has expired or until 90 days after the promulgation of the regulation, whichever is later.

FDA agrees with the comment, but notes that this information is provided in the proposed regulations.

9. One comment suggested that the Panels' classification recommendations do not address the adequacy of the labeling for currently marketed products. The comment noted that the in vitro diagnostic product labeling requirements (21 CFR 809.10) require the manufacturers to conduct tests of their products and characterize their performance through specific claims. It was suggested that Panel deliberations identifying specific labeling deficiencies should be included in support of the Panels' recommendations that the safety and effectiveness of a product cannot be assured by general controls.

FDA disagrees with this comment. The Panels did not review the labeling for all currently marketed products. This kind of labeling review was not the Panels' responsibility. However, in several instances the Panel recommendations suggest specific labeling requirements. The in vitro diagnostic product labeling regulation requires statements of specific performance characteristics and a summary of the data upon which those characteristics are based. The labeling requirements do not specify acceptable performance ranges based on generally accepted reference methods for those performance characteristics. It was precisely this need to prescribe acceptable ranges for precision, accuracy, sensitivity, and specificity that the Panel cited repeatedly as a basis for the need to develop performance standards. Panel discussions of product labeling are contained in the Panel meeting transcripts that are on file at the office of the Hearing Clerk and that are part of the administrative record of these regulations.

10. One comment suggested that the reasons given for recommending class II or class III classifications or for disallowing an exemption are superficial and that the proposals do not reflect substantive deliberation and evaluation. The comment alleged that the proposals contain generalized statements, reflect incomplete familiarity with some products and their uses, and show too little regard for regulatory requirements already in place. The comment requested that the proposed regulations not be promulgated as final regulations

until FDA and the Panel publicly disclose specific reasons why a lower classification is not adequate to ensure safety and effectiveness and provide examples of actual failures resulting in patient or operator injury.

FDA disagrees with the comment. The agency believes that the Panel and FDA cited adequate reasons for the proposed class II or class III classifications. In three instances, FDA has decided to change the classification in the final regulation from that which was proposed. FDA's position on GMP exemptions is discussed elsewhere in this preamble.

The Panel's classification recommendations and FDA's decisions represent over 3½ years of careful deliberation and evaluation. FDA believes that the reasoning presented fully supports the proposed classifications and sees no reason to cite specific examples of actual product failures resulting in injury to a patient or operator. FDA will not delay the publication of final regulations classifying the hematology and pathology devices.

11. One comment suggested that it is unnecessary to make class I recommendations for commonplace instruments that have been used for years.

FDA disagrees with this comment. FDA is charged with the classification by regulation of all medical devices in commercial distribution before the enactment date of the Medical Device Amendments. Therefore, all medical instruments, commonplace or otherwise, must be classified. In several instances the Panels cited the widespread use of a device over a period of years as justification for a class I recommendation.

12. One comment expressed concern that the potentially lengthy premarket approval process will delay the marketing of class III devices. The comment stated that testing of class III devices in an informed and responsible setting would allow for the sharing of expertise between the manufacturer and the clinician. The comment suggested that regulations inappropriately classifying certain devices into class III not be published as final regulations, but that FDA use organizations such as the College of American Pathologists to develop voluntary standards.

FDA points out that many of the devices that are being classified into class III are already on the market and that the statute provides a grace period for the manufacturers of these devices to satisfy premarket approval requirements. With respect to newly offered class III devices subject to premarket approval requirements, FDA does not believe that these requirements will cause unreasonable delay in the marketing of these devices. FDA agrees that testing of devices in a clinical setting is essential for the development of safe and effective medical devices. However, the agency believes that the investigational device exemption (IDE) regulations published in the Federal Register of January 18, 1980 (45 FR 3732) and the product development protocol guidelines (the availability of which will be announced in the future) provide for the testing of class III devices in an informed and responsible clinical setting. FDA believes that class III is an appropriate classification for certain devices for which performance standards cannot be developed. For these devices, voluntary standards would be inadequate even if they could be developed. Therefore, FDA will not delay the final classification of these devices.

13. One comment suggested that FDA offer a second comment period if the identification section of the proposed regulation is changed significantly or if the final regulation places a device in a classification category that differs from the proposed classification.

If the identification section or a proposed classification is changed in response to comments received, FDA will consider whether a reproposal is legally required or is desirable as a matter of policy. The agency declines to commit itself to publishing a reproposal each time the identification section is amended or each time the classification category into which a device is placed differs from the proposed classification. The agency will evaluate each case on its own merits. Interested persons may petition for reclassification of a device under Subpart C of Part 860 (21 CFR Part 860), the classification procedures regulation. In view of the availability of the reclassification process, in most cases it would be an unnecessary procedural step to republish a proposed classification regulation merely because the device in the final regulation is in a classification different from that proposed.

14. One manufacturer noted that Schilling's Test had been determined not to be a medical device but to be a drug under section 201(g)(1) of the act. This determination was based on the fact that the test required the oral administration of radioisotope-labeled (^{57}Co or ^{60}Co) cyanocobalamin and was, therefore, an in vivo diagnostic test. This manufacturer sells two radiopharmaceuticals, ferrous citrate (^{59}Fe) and sodium chromate (^{51}Cr), under approved new drug applications (NDA's) and these products may be used for the iron kinetics test and for the red cell survival test. The manufacturer believes that these are in vivo products and that the iron kinetics test and the red cell survival test are in vivo diagnostic tests and should be deleted from the medical device classification regulations.

FDA agrees with this comment. Accordingly, the iron kinetics test (Docket No. 78N-1870) and the red cell survival test (Docket No. 78N-1875) have been deleted from the final classification regulations for hematology and pathology devices. Separate termination notices for these two docket numbers will be published in the Federal Register at a later time.

15. One comment suggested that the language in the proposed rules for dye and chemical solution stains and hematology stains, Docket Numbers 78N-1834 and 78N-1907, respectively, be modified to prevent the regulation of dye and chemical solution stains under two conflicting regulations.

The agency agrees with this comment. Accordingly, the proposed regulations (Docket Nos. 78N-1834 and 78N-1907) and the proposed regulation for dye powder stains (Docket No. 78N-1835) have been merged into one regulation, dye and chemical solution stains (Docket No. 78N-1834). Separate termination notices for these two deleted docket numbers will be published in the Federal Register at a later time.

16. The system for identification of hepatitis B antigen (Docket No. 78N-1934) consists of the reagents used to test for hepatitis B antigen. Some of the reagents in this product consist of antisera licensed by the Bureau of Biologics of FDA. The agency is not at this time publishing device classification regulations for devices that also are licensed biologics.

Exemptions for Class I Devices

FDA proposed to exempt three generic types of hematology and pathology devices from certain requirements of the good manufacturing practice (GMP) regulation in Part 820 (21 CFR Part 820): Dye and chemical solution stains (Docket No. 78N-1834); tissue processing equipment (Docket No. 78N-1842), and general purpose reagents (Docket No. 78N-1849). Elsewhere in this issue of the Federal Register, the agency is publishing final regulations for classification of these three devices and for microscopes and accessories (Docket No. 78N-1846).

The final regulation for each of these four devices exempts the device from all

of the GMP requirement with the exception of §§ 820.180 and 820.198 relating to records and complaint files. The agency has determined that exception of any device from §§ 820.180 and 820.198 of the GMP regulation would not be in the public interest. Moreover, compliance with these sections is not unduly burdensome for device manufacturers. The complaint file requirements ensure that device manufacturers have adequate systems for complaint investigation and followup. The general requirements concerning records ensure that FDA has access to complaint files, can investigate device-related injury reports and complaints about produce defects, can determine whether the manufacturer's corrective actions are adequate, and can determine whether an exemption from other sections of the GMP regulation, if one has been granted, is still appropriate. Also, for the reasons given in the proposal, these exemptions do not apply to devices that are labeled or otherwise represented as sterile.

In response to a manufacturer's petition (79P-0299) for exemption from the GMP regulation for one hematology or pathology device subject to the document listed below, FDA has granted the exemption if the device is not labeled or otherwise represented as sterile.

Device name	Docket No.
Microscopes and accessories	78N-1846

The exemption does not extend to § 820.180, with respect to general requirements concerning records, and § 820.198, with respect to complaint files. This action is described in more detail in the preamble to the individual final regulation for this device which grants the same exemption to other manufacturers of the device.

Guidelines for Preparing Petitions Requesting Exemption or Variance From the Device GMP Regulation for Device Classified Into Either Class I or Class II

FDA has prepared guidelines on the procedures that should be followed by persons who wish to submit petitions for exemption or variance from the device GMP regulation. These petitions may be submitted in accordance with provisions of section 520(f)(2) of the Federal Food, Drug, and Cosmetic Act (21 U.S.C. 360j(f)(2)). The agency announced the availability of the guidelines in a notice published in the Federal Register on Friday, January 18, 1980 (45 FR 3671).

Changes in Final Regulations

The agency occasionally has made minor changes in device names or identifications to clarify the regulations. Additionally, the agency is adding an explanation in § 864.1 that references in Part 864 to other regulatory sections of the Code of Federal Regulations are to Chapter I of Title 21, unless otherwise noted.

Devices That Have Both Medical and Nonmedical Uses

FDA has also clarified several regulations classifying products that have both medical and nonmedical uses. FDA will regulate a multi-purpose product as a medical device if it is intended for a medical purpose, i.e., for "use in the diagnosis of disease or other conditions, or in the cure, mitigation, treatment, or prevention of disease," or "to affect the structure or any function of the body." Section 201(h). FDA will determine the intended use of a product based upon the expressions of the person legally responsible for its labeling and by the circumstances surrounding its distribution. The most important factors the agency will consider in determining the intended use of a particular product are the labeling, advertising, and other representations accompanying the product. Products that have medical uses only are clearly intended for medical purposes and, therefore, will be regulated as medical devices whether or not medical claims are made for them.

Classification of Platelet Factor 4 Radioimmunoassays and Glycosylated Hemoglobin Assays

Elsewhere in this issue of the Federal Register, FDA is publishing final regulations (Docket Nos. 79P-0112 and 78P-0155) codifying its 1978 and 1979 orders reclassifying platelet factor 4 radioimmunoassays and glycosylated hemoglobin assays from class III into class II. Those regulations provide details about the reclassification of those devices.

Changes in Device Advisory Committee Names

On April 28, 1978, the agency terminated all of the device classification panels and reestablished them with the same functions, but with new names and a new structure. FDA published notices of these changes in the Federal Register of May 19 (43 FR 21666, 21667, and 21668) and May 26, 1978 (43 FR 22672 and 22673). The Hematology Device Classification Panel was terminated, and its functions are now conducted by the Hematology and Pathology Device Section of the Clinical Chemistry and Hematology Devices Panel. The Pathology Device Classification Panel was terminated. Although responsibility for reviewing pathology devices was assigned to the Immunology and Microbiology Devices Panel in 1978 when FDA reorganized the panels, the agency has since amended the panel charters to transfer the responsibility for reviewing these devices to another panel. Pathology devices are now among the devices reviewed by the Hematology and Pathology Device Section of the Clinical Chemistry and Hematology Devices Panel.

Classification Regulations Published to Date

The following table shows the current structure of the advisory committees involved with the classification of medical devices and a list of all proposed and final classification regulations published to date:

Panel/section name	Publication date in FEDERAL REGISTER
Circulatory Systems Devices Panel:	
Clinical Chemistry Device Section	Mar. 9, 1979, 44 FR 13284-13434 (proposals); Feb. 5, 1980, 45 FR 7904-7971 (final regulations).
Clinical Toxicology Device Section	
Hematology and Pathology Device Section	Sept. 11, 1979, 44 FR 52050-53063 (proposals).
General Medical Devices Panel:	
General Hospital and Personal Use Device Section	Aug. 24, 1979, 44 FR 49644-49954 (proposals).
Gastroenterology-Urology Device Section	
Immunology and Microbiology Devices Panel:	
Immunology Device Section	Apr. 22, 1980, 45 FR 27204-27359 (proposals).
Microbiology Device Section	Apr. 22, 1980, 45 FR 27204-27359 (proposals).
Obstetrics-Gynecology and Radiologic Devices Panel:	
Obstetrics-Gynecology Device Section	Apr. 3, 1979, 44 FR 19864-19971 (proposals); Feb. 26, 1980, 45 FR 12682-12720 (final regulations).
Radiology Device Section	
Ophthalmic; Ear, Nose, and Throat; and Dental Devices Panel:	
Ophthalmic Device Section	
Ear, Nose, and Throat Device Section	
Dental Device Section	
Respiratory and Nervous System Devices Panel:	
Anesthesiology Device Section	Nov. 2, 1979, 44 FR 63292-63426 (proposals).
Neurological Device Section	Nov. 23, 1978, 43 FR 54640-55732 (proposals); Sept. 4, 1979, 44 FR 51726-51778 (final regulations).
Surgical and Rehabilitation Devices Panel:	
Physical Medicine Device Section	Aug. 28, 1979, 44 FR 50458-50537 (proposals).
Orthopedic Device Section	
General and Plastic Surgery Device Section	

List of Hematology and Pathology Devices

The following is a list of hematology or pathology devices being classified in the final regulations published elsewhere in this issue of the Federal Register.

The list shows the section of the Code of Federal Regulations under which the regulation classifying the device is being codified, the docket number of the classification regulation, and the classification of each device.

Section	Device	Docket No.	Class
	Subpart B—Biological Stains		
864.1850	Dye and chemical solution stains	78N-1834	I
	Subpart C—Cell and Tissue Culture Products		
864.2220	Synthetic cell and tissue culture media and components	78N-1836	I
864.2240	Cell and tissue culture supplies and equipment	78N-1373	I
864.2260	Chromosome culture kit	78N-1837	I
864.2280	Cultured animal and human cells	78N-1838	I
864.2360	Mycoplasma detection media and components	78N-1839	I
864.2800	Animal and human sera	78N-1840	I
864.2875	Balanced salt solutions or formulations	78N-1841	I
	Subpart D—Pathology—Instrumentation and Accessories		
864.3010	Tissue processing equipment	78N-1842	I
864.3250	Specimen transport and storage container	78N-1843	I
864.3300	Cytocentrifuge	78N-1844	I
864.3400	Device for sealing microsections	78N-1845	I
864.3600	Microscopes and accessories	78N-1846	I
864.3800	Automated slide stainer	78N-1847	I
864.3875	Automated tissue processor	78N-1848	I
	Subpart E—Specimen Preparation Reagents		
864.4010	General purpose reagent	78N-1849	I
864.4400	Enzyme preparations	78N-1850	I
	Subpart F—Automated and Semiautomated Hematology Devices		
864.5200	Automated cell counter	78N-1851	II
864.5220	Automated differential cell counter	78N-1852	III
864.5240	Automated blood cell diluting apparatus	78N-1853	I
864.5260	Automated cell locating device	78N-1854	II
864.5300	Red cell indices device	78N-1855	II
864.5350	Microsedimentation centrifuge	78N-1856	I
864.5400	Coagulation instrument	78N-1857	II
864.5425	Multipurpose sytem for in vitro coagulation studies	78N-1858	II
864.5600	Automated hematocrit instrument	78N-1859	II
864.5620	Automated hemoglobin system	78N-1860	II
864.5680	Automated heparin analyzer	78N-1861	III
864.5700	Automated platelet aggregation system	78N-1862	II
864.5800	Automated sedimentation rate device	78N-1863	I
864.5850	Automated slide spinner	78N-1864	I
864.5950	Blood volume measuring device	78N-1865	II
	Subpart G—Manual Hematology Devices		
864.6100	Bleeding time device	78N-1866	II
864.6150	Capillary blood collection tube	78N-1867	I
864.6160	Manual blood cell counting device	78N-1868	I
864.6400	Hematocrit measuring device	78N-1869	II
864.6550	Occult blood test	78N-1871	II
864.6600	Osmotic fragility test	78N-1872	I
864.6650	Platelet adhesion test	78N-1873	II
864.6675	Platelet aggregometer	78N-1874	II
864.6700	Erythrocyte sedimentation rate test	78N-1876	I
	Subpart H—Hematology Kits and Packages		
864.7040	Adenosine triphosphate release assay	78N-1877	I
864.7060	Antithrombin III assay	78N-1878	II
864.7100	Red blood cell enzyme assay	78N-1879	II
864.7140	Activated whole blood clotting time test	78N-1880	II
864.7250	Erythropoietin assay	78N-1881	III
864.7275	Euglobulin lysis time test	78N-1882	II
864.7290	Factor deficiency test	78N-1883	II
864.7300	Fibrin monomer paracoagulation test	78N-1884	III
864.7320	Fibrinogen/fibrin degradation products assay	78N-1885	II
864.7340	Fibrinogen determination system	78N-1886	II
864.7360	Erythrocytic glucose-6-phosphate dehydrogenase assay	78N-1887	II
864.7375	Glutathione reductase assay	78N-1888	II
864.7400	Hemoglobin A2 assay	78N-1889	II
864.7415	Abnormal hemoglobin assay	78N-1890	II
864.7425	Carboxyhemoglobin assay	78N-1891	II

Subpart H—Hematology Kits and Packages—Continued

864.7440	Electrophoretic hemoglobin analysis system	78N-1892	II
864.7455	Fetal hemoglobin assay	78N-1893	II
864.7470	Glycosylated hemoglobin assay	78P-0155	II
864.7490	Sulfhemoglobin assay	78N-1895	II
864.7500	Whole blood hemoglobin assay	78N-1896	II
864.7525	Heparin assay	78N-1897	II
864.7660	Leukocyte alkaline phosphatase test	78N-1898	I
864.7675	Leukocyte peroxidase test	78N-1899	I
864.7695	Platelet factor 4 radioimmunoassay	79P-0112	II
864.7720	Prothrombin consumption test	78N-1900	II
864.7735	Prothrombin-proconvertin test and thrombotest	78N-1901	II
864.7750	Prothrombin time test	78N-1902	II
864.7825	Sickle cell test	78N-1903	II
864.7875	Thrombin time test	78N-1904	II
864.7900	Thromboplastin generation test	78N-1905	I
864.7925	Partial thromboplastin time test	78N-1906	II

Subpart I—Hematology Reagents

864.8100	Bothrops atrox reagent	78N-1908	II
864.8150	Calibrator for cell indices	78N-1909	II
864.8165	Calibrator for hemoglobin or hematocrit measurement	78N-1910	II
864.8175	Calibrator for platelet counting	78N-1911	II
864.8185	Calibrator for red cell and white cell counting	78N-1912	II
864.8200	Blood cell diluent	78N-1913	I
864.8500	Lymphocyte separation medium	78N-1914	I
864.8540	Red cell lysing reagent	78N-1915	I
864.8625	Hematology quality control mixture	78N-1916	II
864.8950	Russell viper venom reagent	78N-1917	I

Subpart J—Products Used in Establishments That Manufacture Blood and Blood Products

864.9050	Blood bank supplies	78N-1918	I
864.9100	Empty container for the collection and processing of blood and blood components.	78N-1919	II
864.9125	Vacuum-assisted blood collection system	78N-1920	I
864.9145	Processing system for frozen blood	78N-1921	II
864.9160	Blood group substances of nonhuman origin for in vitro diagnostic use.	78N-1922	II
864.9175	Automated blood grouping and antibody test system	78N-1923	II
864.9185	Blood grouping view box	78N-1924	I
864.9195	Blood mixing devices and blood weighing device	78N-1925	I
864.9205	Blood and plasma warming device	78N-1926	II, III
864.9225	Cell-freezing apparatus and reagents for in vitro diagnostic use.	78N-1927	I
864.9245	Automated blood cell separator	78N-1928	III
864.9275	Blood bank centrifuge for in vitro diagnostic use	78N-1929	I
864.9285	Automated cell-washing centrifuge for immuno-hematology	78N-1930	II
864.9300	Automated Coombs test system	78N-1931	II
864.9320	Copper sulfate solution for specific gravity determinations	78N-1932	I
864.9400	Stabilized enzyme solution	78N-1933	II
864.9550	Lectins and protectins	78N-1935	II
864.9575	Environmental chamber for storage of platelet concentrate	78N-1936	II
864.9600	Potentiating media for in vitro diagnostic use	78N-1937	II
864.9650	Quality control kit for blood banking reagents	78N-1938	II
864.9700	Blood storage refrigerator and blood storage freezer	78N-1939	II
864.9750	Heat-sealing device	78N-1940	I
864.9875	Transfer set	78N-1942	I

Changes in Classification Made in Response to Comments or Reconsideration

In response to comments made on the hematology and pathology proposed regulations, receipt of new information, or reconsideration, the agency has changed the classification of the following four devices in the final regulations:

Docket No.	Device	Proposed classification	Final classification
78N-1873	Platelet adhesion test	I	II
78N-1884	Fibrin monomer paracoagulation test	II	III
78N-1909	Calibrator for cell indices	III	II
78N-1911	Calibrator for platelet counting	III	II

Patient Information

FDA is considering requiring the development and dissemination of information for patients and consumers about the uses, benefits, and risks of medical device. For example, patient information has already been required by FDA for intrauterine devices and hearing aids. In addition, the Bureau of Radiological Health is conducting a consumer education program on X-rays that includes posters on the effects of radiation during pregnancy and distribution of X-ray record cards.

FDA believes that patient information is needed if: (1) There is a choice among alternatives of which the patient should be aware; (2) there are substantial risks or discomforts associated with the product; (3) the cost of the product is

significant; (4) there is a need for the patient to strictly adhere to a specific treatment regimen; and (5) there is substantial public or professional controversy about the device or its related procedures.

FDA can require that manufacturers make medical device information available to providers for their use and the use of their patients through the premarket approval or standards setting processes as well as the general control provisions of the Federal Food, Drug, and Cosmetic Act. The mechanisms available to FDA to provide patient information for devices include: (1) Labeling for restricted and nonrestricted devices; (2) patient and provider information; and (3) consumer and patient education programs.

FDA has tentatively identified those hematology and pathology devices for which patient information may be required. Other hematology and pathology devices may be identified in the future, after the criteria for selection of devices needing patient information have been further refined. The devices that have been identified so far are listed below:

Device	Docket No.
Occult blood test	78N-1871
Bleeding time device	78N-1866
Automated blood cell separator	78N-1928

Therefore, under the Federal Food, Drug, and Cosmetic Act (secs. 513, 701(a), 52 Stat. 1055, 90 Stat. 540-546 (21 U.S.C. 360c, 371(a))) and under authority delegated to him (21 CFR 5.1), the Commissioner of Food and Drugs amends Chapter I of Title 21 of the Code of Federal Regulations by adding new Part 864, Subpart A, to read as follows:

PART 864—HEMATOLOGY AND PATHOLOGY DEVICES

Subpart A—General Provisions

Sec.
864.1 Scope.

Authority: Secs. 513 and 701(a), 52 Stat. 1055, 90 Stat. 540-546 (21 U.S.C. 360c and 701(a)).

Subpart A—General Provisions

864.1 Scope.

(a) This part sets forth the classification of hematology and pathology devices intended for human use.

(b) The identification of a device in a regulation in this part is not a precise description of every device that is, or will be, subject to the regulation. A manufacturer who submits a premarket notification submission for a device under Part 807 cannot show merely that the device is accurately described by the section title and identification provision of a regulation in this part, but shall state why the device is substantially equivalent to other devices, as required by § 807.87.

(c) References in this part to regulatory sections of the Code of Federal Regulations are to Title I of Chapter 21, unless otherwise noted.

Effective date. This regulation is effective October 14, 1980.

(Secs. 513, 701(a), 52 Stat. 1055, 90 Stat. 540-546 (21 U.S.C. 360c, 371(a)))

Dated: August 15, 1980.

William F. Randolph,

Acting Associate Commissioner for Regulatory Affairs.

[FR Doc. 80-27297 Filed 9-11-80; 8:45 am]
BILLING CODE 4110-03-M

---

21 CFR Part 864

[Docket No. 78N-1834]

Classification of Dye and Chemical Solution Stains

AGENCY: Food and Drug Adminstration.

ACTION: Final rule.

SUMMARY: The Food and Drug Administration (FDA) is issuing a final rule classifying dye and chemical solution stains into class I (general controls) and exempting manufacturers of the device from certain requirements of the good manufacturing practice regulation. The affect of this rule is to require that the device meet only the general controls applicable to all devices, except for certain requirements of the good manufacturing practice regulation. This action is being taken under the Medical Device Amendments of 1976.

EFFECTIVE DATE: October 14, 1980.

FOR FURTHER INFORMATION CONTACT: Kaiser Aziz, Bureau of Medical Devices (HFK-440), Food and Drug Administration, 8757 Georgia Ave., Silver Spring, MD 20910, 301-427-7550.

SUPPLEMENTARY INFORMATION: FDA published in the Federal Register of September 11, 1979 (44 FR 52950), a proposed regulation explaining the development of the proposed regulations classifying hematology and pathology devices, the medical device classification procedures, and the activities of the Hematology and Pathology Device Section of the Clinical Chemistry and Hematology Devices Panel (formerly the Hematology Device Classification Panel and the Pathology Device Classification Panel). FDA also published in that issue of the Federal Register a proposed regulation to classify dye and chemical solution stains (44 FR 52957), dye powder stains (44 FR 52959), and hematology stains (44 FR 53030) into class I (general controls). A period of 60 days was provided for interested persons to submit written comments to FDA.

The following is a summary of the comments received on the proposal and the agency's response to them.

1. All three comments agreed with the proposed classification of the devices into class I. One comment suggested that the proposed regulation on dye and chemical solution stains (Docket No. 78N-1834) be combined with that on hematology stains (Docket No. 78N-1907), because the identification for the dye and chemical solution stains encompasses the indentification of hematology stains, but the two proposals have different requirements.

FDA agrees with the comment. The agency is combining the three proposed regulations concerning stains (Docket Nos. 78N-1834, 78N-1907, and 78N-1835) into one regulation, on dye and chemical solution stains. The identification for this generic type of device has been broadened to include all of the devices covered by the three proposals. Therefore, no final regulation will be published for hematology stains and dye power stains (Docket Nos. 78N-1907 and 78N-1835).

2. Two comments suggested that additional exemptions be provided from FDA requirements. The first comment suggested that dye and chemical solution stains and hematology stains be exempt from premarket notification procedures under section 510(k) of the Federal Food, Drug, and Cosmetic Act (the act) (21 U.S.C. 360(k)) because the procedures are not necessary to protect the public health. The second comment suggested that various certified hematology stains be exempt from records and reports requirements under section 519 of the act (21 U.S.C. 360i).

FDA disagrees with the comment's suggestion that manufacturers of certain stains be exempt from records and reports regulations promulgated under section 519 of the act. The records and reports requirements in several of FDA's present device regulations are authorized, in whole or in part, by section 519 of the act. The most extensive of these requirements are

found in the device good manufacturing practice (GMP) regulation, published in the Federal Register of July 21, 1978 (43 FR 31508). In the future, FDA will publish other regulations under section 519 of the act, including regulations requiring reports to FDA of experience with medical devices. Until these regulations are issued, FDA believes that it cannot properly issue exemptions from them. In the future, whenever the agency proposes device regulations that include records and reports requirements, interested persons may submit comments requesting that certain classes of manufacturers of other persons be exempt from the requirements, and FDA will issue exemptions that are appropriate. The only type of exemption from records and reports requirements that FDA is now considering, in device classification regulations, is an exemption of certain manufacturers from requirements of the device GMP regulation. That exemption is granted with respect to manufacturers of dye and chemical solution stains. However, the exemption will not extend to two device GMP requirements, § 820.180 (21 CFR 820.180), with respect to general requirements concerning records, and § 820.198 (21 CFR 820.198), with respect to complaint files.

FDA disagrees with the comment's suggestion that manufacturers of dye and chemical solution stains and hematology stains be exempt from all requirement under section 510(k) of the act. Under section 510(g)(4) of the act, the agency may exempt a manufacturer from requirements in section 510 of the act only upon a finding that compliance with this section is not necessary for the protection of the public health. In the case of these devices, the agency cannot make the suggested finding. To protect the public health, the agency believes that it is necessary to receive premarket notification by these manufacturers to assure that FDA learns of new devices, and of significant modifications of existing devices.

Accordingly, the regulation for dye and chemical stains is being adopted with the changes in identification necessary to combine the three proposed regulations concerning stains into one regulation. Because of the merger of the regulations, hematology stains (Docket No. 78N-1907) now are exempt from certain sections of the device GMP regulation.

On April 28, 1978, the agency terminated all of the device classification panels and reestablished them with the same functions, but with new names and with a new structure. FDA published notices of these changes in the Federal Register of May 19, 1978 (43 FR 21666, 21667, and 21668) and May 26, 1978 (43 FR 22672 and 22673). Further information regarding the device advisory committees and a list of their new names may be found in the preamble to the general provisions, published elsewhere in this issue of the Federal Register.

Therefore, under the Federal Food, Drug, and Cosmetic Act (secs. 513, 701(a), 52 Stat. 1055, 90 Stat. 540-546 (21 U.S.C. 360c, 371(a))) and under authority delegated to him (21 CFR 5.1), the Commissioner of Food and Drugs is amending Part 864 in Subpart B by adding new § 864.1850, to read as follows:

Subpart B—Biological Stains

§ 864.1850 Dye and chemical solution stains.

(a) *Identification.* Dye and chemical solution stains for medical purposes are mixtures of synthetic or natural dyes or nondye chemicals in solutions used in staining cells and tissues for diagnostic histopathology, cytopathology, or hematology.

(b) *Classification.* Class I (general controls). The devices are exempt from the good manufacturing practice regulation in Part 820, with the exception of § 820.180, with respect to general requirements concerning records, and § 820.198, with respect to complaint files.

Effective date. This regulation shall be effective October 14, 1980.

(Secs. 513,701(a), 52 Stat. 1055, 90 Stat. 540-546 (21 U.S.C. 360c, 371(a)))

Dated: August 15, 1980.

William F. Randolph,

Acting Associate Commissioner for Regulatory Affairs.

[FR Doc. 80-27298 Filed 9-11-80; 8:45 am]
BILLING CODE 4110-03-M

---

21 CFR Part 864

[Docket No. 78N-1836]

Classification of Synthetic Cell and Tissue Culture Media and Components

AGENCY: Food and Drug Administration.

ACTION: Final rule.

SUMMARY: The Food and Drug Administration (FDA) is issuing a final rule classifying synthetic cell and tissue culture media and components into class I (general controls). The effect of classifying a device into class I is to require that the device meet only the general controls applicable to all devices. This action is being taken under the Medical Device Amendments of 1976.

EFFECTIVE DATE: October 14, 1980.

FOR FURTHER INFORMATION CONTACT: Kaiser Aziz, Bureau of Medical Devices (HFK-440), Food and Drug Administration, 8757 Georgia Ave., Silver Spring, MD 20910, 301-427-7550.

SUPPLEMENTARY INFORMATION: FDA published in the Federal Register of September 11, 1979 (44 FR 52950), a proposed regulation explaining the development of the proposed regulations classifying hematology and pathology devices, the medical device classification procedures, and the activities of the Hematology and Pathology Device Section of the Clinical Chemistry and Hematology Devices Panel (formerly the Hematology Device Classification Panel and the Pathology Device Classification Panel). FDA also published in that issue of the Federal Register (44 FR 52960) a proposed regulation to classify synthetic cell and tissue culture media and components into class I (general controls). A period of 60 days was provided for interested persons to submit written comments to FDA.

No comments have been received regarding the proposed regulation to classify this device. Accordingly, the proposed regulation is being adopted without change.

On April 28, 1978, the agency terminated all of the device classification panels and reestablished them with the same functions, but with new names and with a new structure. FDA published notices of these changes in the Federal Register of May 19, 1978 (43 FR 21666, 21667, and 21668) and May 26, 1978 (43 FR 22672 and 22673). Further information regarding the device advisory committees and a list of their new names may be found in the preamble to the general provisions, published elsewhere in this issue of the Federal Register.

Therefore, under the Federal Food, Drug, and Cosmetic Act (secs. 513, 701(a), 52 Stat. 1055, 90 Stat. 540-546 (21 U.S.C. 360c, 371(a))) and under authority delegated to him (21 CFR 5.1), the Commissioner of Food and Drugs is amending Part 864 in Subpart C by adding new § 864.2220, to read as follows:

Subpart C—Cell And Tissue Culture Products

§ 864.2220 Synthetic cell and tissue culture media and components.

(a) *Identification.* Synthetic cell and tissue culture media and components are substances that are composed entirely of defined components (e.g.,

amino acids, vitamins, inorganic salts, etc.) that are essential for the survival and development of cell lines of humans and other animals.

(b) *Classification.* Class I (general controls).

Effective date. This regulation shall be effective October 14, 1980.

(Secs. 513, 701(a), 52 Stat. 1055; 90 Stat. 540–546 (21 U.S.C. 360c, 371(a)))

Dated: August 15, 1980.

William F. Randolph,

Acting Associate Commissioner for Regulatory Affairs.

[FR Doc. 80-27299 Filed 9-11-80; 8:45 am]

BILLING CODE 4110-03-M

21 CFR Part 864

[Docket No. 78N-1373]

Classification of Cell and Tissue Culture Supplies and Equipment

AGENCY: Food and Drug Administration.

ACTION: Final rule.

SUMMARY: The Food and Drug Administration (FDA) is issuing a final rule classifying cell and tissue culture supplies and equipment into class I (general controls) and exempting manufacturers of the device from certain requirements of the good manufacturing practice regulation. The effect of this rule is to require that the device meet only the general controls applicable to all devices, except for certain requirements of the good manufacturing practice regulation. This action is being taken under the Medical Device Amendments of 1976.

EFFECTIVE DATE: October 14, 1980.

FOR FURTHER INFORMATION CONTACT: Kaiser Aziz, Bureau of Medical Devices (HFK-440), Food and Drug Administration, 8757 Georgia Ave., Silver Spring, MD 20910, 301-427-7550.

SUPPLEMENTARY INFORMATION: FDA published in the Federal Register of September 11, 1979 (44 FR 52950), a proposed regulation explaining the development of the proposed regulations classifying hematology and pathology devices, the medical device classification procedures, and the activities of the Hematology and Pathology Device Section of the Clinical Chemistry and Hematology Devices Panel (formerly the Hematology Device Classification Panel and the Pathology Device Classification Panel). FDA also published in that issue of the Federal Register (44 FR 52961) a proposed regulation to classify cell and tissue culture supplies and equipment into class I (general controls). A period of 60 days was provided for interested persons to submit written comments to FDA.

No comments have been received regarding the proposed regulation to classify this device. Accordingly, the proposed regulation is being adopted without change.

On April 28, 1978, the agency terminated all of the device classification panels and reestablished them with the same functions, but with new names and with a new structure. FDA published notices of these changes in the Federal Register of May 19, 1978 (43 FR 21666, 21667, and 21668) and May 26, 1978 (43 FR 22672 and 22673). Further information regarding the device advisory committees and a list of their new names may be found in the preamble to the general provisions, published elsewhere in this issue of the Federal Register.

Therefore, under the Federal Food, Drug, and Cosmetic Act (secs. 513, 701(a), 52 Stat. 1055, 90 Stat. 540–546 (21 U.S.C. 360c, 371(a))) and under authority delegated to him (21 CFR 5.1), the Commissioner of Food and Drugs is amending Part 864 in Subpart C by adding new § 864.2240, to read as follows:

§ 864.2240 Cell and tissue culture supplies and equipment.

(a) *Identification.* Cell and tissue culture supplies and equipment are devices that are used to examine, propagate, nourish, or grow cells and tissue cultures. These include such articles as slide culture chambers, perfusion and roller apparatus, cell culture suspension systems, and tissue culture flasks, disks, tubes, and roller bottles.

(b) *Classification.* Class I (general controls). If the devices are not labeled or otherwise represented as sterile, they are exempt from the good manufacturing practice regulation in Part 820, with the exception of § 820.180, with respect to general requirements concerning records, and § 820.198, with respect to complaint files.

Effective date. This regulation shall be effective October 14, 1980.

(Secs. 513, 701(a), 52 Stat. 1055, 90 Stat. 540–546 (21 U.S.C. 360c, 371(a)))

Dated: August 15, 1980.

William F. Randolph,

Acting Associate Commissioner for Regulatory Affairs.

[FR Doc. 80-27300 Filed 9-11-80; 8:45 am]

BILLING CODE 4110-03-M

21 CFR Part 864

[Docket No. 78N-1837]

Classification of Chromosome Culture Kits

AGENCY: Food and Drug Administration.

ACTION: Final rule.

SUMMARY: The Food and Drug Administration (FDA) is issuing a final rule classifying chromosome culture kits into class I (general controls). The effect of classifying a device into class I is to require that the device meet only the general controls applicable to all devices. This action is being taken under the Medical Device Amendments of 1976.

EFFECTIVE DATE: October 14, 1980.

FOR FURTHER INFORMATION CONTACT: Kaiser Aziz, Bureau of Medical Devices (HFK-440), Food and Drug Administration, 8757 Georgia Ave., Silver Spring, MD 20910, 301-427-7550.

SUPPLEMENTARY INFORMATION: FDA published in the Federal Register of September 11, 1979 (44 FR 52950), a proposed regulation explaining the development of the proposed regulations classifying hematology and pathology devices, the medical device classification procedures, and the activities of the Hematology and Pathology Device Section of the Clinical Chemistry and Hematology Device Section Panel (formerly the Hematology Device Classification Panel and the Pathology Device Classification Panel). FDA also published in that issue of the Federal Register (44 FR 52962) a proposed regulation to classify chromosome culture kits into class I (general controls). A period of 60 days was provided for interested persons to submit written comments to FDA.

No comments have been received regarding the proposed regulation to classify this device. Accordingly, the proposed regulation is being adopted without change.

On April 28, 1978, the agency terminated all of the device classification panels and reestablished them with the same functions, but with new names and with a new structure. FDA published notices of these changes in the Federal Register of May 19, 1978 (43 FR 21666, 21667, and 21668) and May 26, 1978 (43 FR 22672 and 22673). Further information regarding the device advisory committees and a list of their new names may be found in the preamble to the general provisions, published elsewhere in this issue of the Federal Register.

Therefore, under the Federal Food, Drug, and Cosmetic Act (secs. 513,

701(a), 52 Stat. 1055, 90 Stat. 540–546 (21 U.S.C. 360c, 371(a))) and under authority delegated to him (21 CFR 5.1), the Commissioner of Food and Drugs is amending Part 864 in Subpart C by adding new § 864.2260, to read as follows:

§ 864.2260 Chromosome culture kit.

(a) *Identification.* A chromosome culture kit is a device containing the necessary ingredients (e.g., Minimum Essential Media (MEM) of McCoy's 5A culture media, phytohemagglutinin, fetal calf serum, antibiotics, and heparin) used to culture tissues for diagnosis of congenital chromosome abnormalities.

(b) *Classification.* Class I (general controls).

Effective date. This regulation shall be effective October 14, 1980.

(Secs. 513, 701(a), 52 Stat. 1055, 90 Stat. 540–546 (21 U.S.C. 360c, 371(a)))

Dated: August 15, 1980.

William F. Randolph,

Acting Associate Commissioner for Regulatory Affairs.

[FR Doc. 80-27301 Filed 9-11-80; 8:45 am]

BILLING CODE 4110-03-M

---

21 CFR Part 864

[Docket No. 78N-1838]

Classification of Cultured Animal and Human Cells

AGENCY: Food and Drug Administration.

ACTION: Final rule.

SUMMARY: The Food and Drug Administration (FDA) is issuing a final rule classifying cultured animal and human cells into class I (general controls). The effect of classifying a device into class I is to require that the device meet only the general controls applicable to all devices. This action is being taken under the Medical Device Amendments of 1976.

EFFECTIVE DATE: October 14, 1980.

FOR FURTHER INFORMATION CONTACT: Kaiser Aziz, Bureau of Medical Devices (HFK-440), Food and Drug Administration, 8757 Georgia Ave., Silver Spring, MD 20910, 301-427-7550.

SUPPLEMENTARY INFORMATION: FDA published in the Federal Register of September 11, 1979 (44 FR 52950), a proposed regulation explaining the development of the proposed regulations classifying hematology or pathology devices, the medical device classification procedures, and the activities of the Hematology and Pathology Device Section of the Clinical Chemistry and Hematology Devices Panel (formerly the Hematology Device Classification Panel and the Pathology Device Classification Panel). FDA also published in that issue of the Federal Register (44 FR 52963) a proposed regulation to classify cultured animal and human cells into class I (general controls). A period of 60 days was provided for interested persons to submit written comments to FDA.

No comments have been received regarding the proposed regulation to classify this device. Accordingly, the proposed regulation is being adopted without change.

On April 28, 1978, the agency terminated all of the device classification panels and reestablished them with the same functions, but with new names and with a new structure. FDA published notices of these changes in the Federal Register of May 19, 1978 (43 FR 21666, 21667, and 21668) and May 26, 1978 (43 FR 22672 and 22673). Further information regarding the device advisory committees and a list of their new names may be found in the preamble to the general provisions, published elsewhere in this issue of the Federal Register.

Therefore, under the Federal Food, Drug, and Cosmetic Act (secs. 513, 701(a), 52 Stat. 1055, 90 Stat. 540–546 (21 U.S.C. 360c, 371(a))) and under authority delegated to him (21 CFR 5.1), the Commissioner of Food and Drugs is amending Part 864 in Subpart C by adding new § 864.2280, to read as follows:

§ 864.2280 Cultured animal and human cells.

(a) *Identification.* Cultured animal and human cells are in vitro cultivated cell lines from the tissue of humans or other animals which are used in various diagnostic procedures, particularly diagnostic virology and cytogenetic studies.

(b) *Classification.* Class I (general controls).

Effective date. This regulation shall be effective October 14, 1980.

(Secs. 513, 701(a), 52 Stat. 1055, 90 Stat. 540–546 (21 U.S.C. 360c, 371(a)))

Dated: August 15, 1980.

William F. Randolph,

Acting Associate Commissioner for Regulatory Affairs.

[FR Doc. 80-27302 Filed 9-11-80; 8:45 am]

BILLING CODE 4110-03-M

---

21 CFR Part 864

[Docket No. 78N-1839]

Classification of Mycoplasma Detection Media and Components

AGENCY: Food and Drug Administration.

ACTION: Final rule.

SUMMARY: The Food and Drug Administration (FDA) is issuing a final rule classifying mycoplasma detection media and components into class I (general controls). The effect of classifying a device into class I is to require that the device meet only the general controls applicable to all devices. This action is being taken under the Medical Device Amendments of 1976.

EFFECTIVE DATE: October 14, 1980.

FOR FURTHER INFORMATION CONTACT: Kaiser Aziz, Bureau of Medical Devices (HFK-440), Food and Drug Administration, 8757 Georgia Ave., Silver Spring, MD 20910, 301-427-7550.

SUPPLEMENTARY INFORMATION: FDA published in the Federal Register of September 11, 1979 (44 FR 52950), a proposed regulation explaining the development of the proposed regulations classifying hematology and pathology devices, the medical device classification procedures, and the activities of the Hematology and Pathology Device Section of the Clinical Chemistry and Hematology Devices Panel (formerly the Hematology Device Classification Panel and the Pathology Device Classification Panel). FDA also published in that issue of the Federal Register (44 FR 52963) a proposed regulation to classify mycoplasma detection media and components into class I (general controls). A period of 60 days was provided for interested persons to submit written comments to FDA.

No comments have been received regarding the proposed regulation to classify this device. Accordingly, the proposed regulation is being adopted without change.

On April 28, 1978, the agency terminated all of the device classification panels and reestablished them with the same functions, but with new names and with a new structure. FDA published notices of these changes in the Federal Register of May 19, 1978 (43 FR 21666, 21667, and 21668) and May 26, 1978 (43 FR 22672 and 22673). Further information regarding the device advisory committees and a list of their new names may be found in the preamble to the general provisions, published elsewhere in this issue of the Federal Register.

Therefore, under the Federal Food, Drug, and Cosmetic Act (secs. 513, 701(a), 52 Stat. 1055, 90 Stat. 540–546 (21 U.S.C. 360c, 371(a))) and under authority delegated to him (21 CFR 5.1), the Commissioner of Food and Drugs is amending Part 864 in Subpart C by

adding new § 864.2360, to read as follows:

§ 864.2360 Mycoplasma detection media and components.

(a) *Identification.* Mycoplasma detection media and components are used to detect and isolate mycoplasma pleuropneumonia-like organisms (PPLO), a common microbial contaminant in cell cultures.

(b) *Classification.* Class I (general controls).

Effective date. This regulation shall be effective October 14, 1980.

(Secs. 513, 701(a), 52 Stat. 1055, 90 Stat. 540–546 (21 U.S.C. 360c, 371(a)))

Dated: August 15, 1980.

William F. Randolph,

Acting Associate Commissioner for Regulatory Affairs.

[FR Doc. 80-27303 Filed 9-11-80; 8:45 am]

BILLING CODE 4110-03-M

---

21 CFR Part 864

[Docket No. 78N-1840]

Classification of Animal and Human Sera

AGENCY: Food and Drug Administration.

ACTION: Final rule.

SUMMARY: The Food and Drug Administration (FDA) is issuing a final rule classifying animal and human sera into class I (general controls). The effect of classifying a device into class I is to require that the device meet only the general controls applicable to all devices. This action is being taken under the Medical Device Amendments of 1976.

EFFECTIVE DATE: October 14, 1980.

FOR FURTHER INFORMATION CONTACT: Kaiser Aziz, Bureau of Medical Devices (HFK-440), Food and Drug Administration, 8757 Georgia Ave., Silver Spring, MD 20910, 301-427-7550.

SUPPLEMENTARY INFORMATION: FDA published in the Federal Register of September 11, 1979 (44 FR 52950), a proposed regulation explaining the development of the proposed regulations classifying hematology and pathology devices, the medical device classification procedures, and the activities of the Hematology and Pathology Device Section of the Clinical Chemistry and Hematology Devices Panel (formerly the Hematology Device Classification Panel and the Pathology Device Classification Panel). FDA also published in that issue of the Federal Register (44 FR 52964) a proposed regulation to classify animal and human sera into class I (general controls). A period of 60 days was provided for interested persons to submit written comments to FDA.

No comments have been received regarding the proposed regulation to classify this device. Accordingly, the proposed regulation is being adopted without change.

On April 28, 1978, the agency terminated all of the device classification panels and reestablished them with the same functions, but with new names and with a new structure. FDA published notices of these changes in the Federal Register of May 19, 1978 (43 FR 21666, 21667, and 21668) and May 26, 1978 (43 FR 22672 and 22673). Further information regarding the device advisory committees and a list of their new names may be found in the preamble to the general provisions, published elsewhere in this issue of the Federal Register.

Therefore, under the Federal Food, Drug, and Cosmetic Act (secs. 513, 701(a), 52 Stat. 1055, 90 Stat. 540–546 (21 U.S.C. 360c, 371(a))) and under authority delegated to him (21 CFR 5.1), the Commissioner of Food and Drugs is amending Part 864 in Subpart C by adding new § 864.2800, to read as follows:

§ 864.2800 Animal and human sera.

(a) *Identification.* Animal and human sera are biological products, obtained from the blood of humans or other animals, that provide the necessary growth-promoting nutrients in a cell culture system.

(b) *Classification.* Class I (general controls).

Effective date. This regulation shall be effective October 14, 1980.

(Secs. 513, 701(a), 52 Stat. 1055, 90 Stat. 540–546 (21 U.S.C. 360c, 371(a)))

Dated: August 15, 1980.

William F. Randolph,

Acting Associate Commissioner for Regulatory Affairs.

[FR Doc. 80-27304 Filed 9-11-80; 8:45 am]

BILLING CODE 4110-03-M

---

21 CFR Part 864

[Docket No. 78N-1841]

Classification of Balanced Salt Solutions or Formulations

AGENCY: Food and Drug Administration.

ACTION: Final rule.

SUMMARY: The Food and Drug Administration (FDA) is issuing a final rule classifying balanced salt solutions or formulations into class I (general controls). The effect of classifying a device into class I is to require that the device meet only the general controls applicable to all devices. This action is being taken under the Medical Device Amendments of 1976.

EFFECTIVE DATE: October 14, 1980.

FOR FURTHER INFORMATION CONTACT: Kaiser Aziz, Bureau of Medical Devices (HFK-440), Food and Drug Administration, 8757 Georgia Ave., Silver Spring, MD 20910, 301-427-7550.

SUPPLEMENTARY INFORMATION: FDA published in the Federal Register of September 11, 1979 (44 FR 52950), a proposed regulation explaining the development of the proposed regulations classifying hematology and pathology devices, the medical device classification procedures, and the activities of the Hematology and Pathology Device Section of the Clinical Chemistry and Hematology Devices Panel (formerly the Hematology Device Classification Panel and the Pathology Device Classification Panel). FDA also published in that issue of the Federal Register (44 FR 52965) a proposed regulation to classify balanced salt solutions or formulations into class I (general controls). A period of 60 days was provided for interested persons to submit written comments to FDA.

No comments have been received regarding the proposed regulation to classify this device. Accordingly, the proposed regulation is being adopted without change.

On April 28, 1978, the agency terminated all of the device classification panels and reestablished them with the same functions, but with new names and with a new structure. FDA published notices of these changes in the Federal Register of May 19, 1978 (43 FR 21666, 21667, and 21668) and May 26, 1978 (43 FR 22672 and 22673). Further information regarding the device advisory committees and a list of their new names may be found in the preamble to the general provisions, published elsewhere in this issue of the Federal Register.

Therefore, under the Federal Food, Drug, and Cosmetic Act (secs. 513, 701(a), 52 Stat. 1055, 90 Stat. 540–546 (21 U.S.C. 360c, 371(a))) and under authority delegated to him (21 CFR 5.1), the Commissioner of Food and Drugs is amending Part 864 in Subpart C by adding new § 864.2875, to read as follows:

§ 864.2875 Balanced salt solutions or formulations.

(a) *Identification.* A balanced salt solution or formulation is a defined mixture of salts and glucose in a simple medium. This device is included as a necessary component of most cell

culture systems. This media component controls for pH, osmotic pressure, energy source, and inorganic ions.

(b) *Classification.* Class I (general controls).

Effective date. This regulation shall be effective October 14, 1980.

(Secs. 513, 701(a), 52 Stat. 1055, 90 Stat. 540–546 (21 U.S.C. 360c, 371(a)))

Dated: August 15, 1980.

William F. Randolph,

Acting Associate Commissioner for Regulatory Affairs.

[FR Doc. 80-27305 Filed 9-11-80; 8:45 am]

BILLING CODE 4110-03-M

---

21 CFR Part 864

[Docket No. 78N-1842]

Classification of Tissue Processing Equipment

AGENCY: Food and Drug Administration.

ACTION: Final rule.

SUMMARY: The Food and Drug Administration (FDA) is issuing a final rule classifying tissue processing equipment into class I (general controls) and exempting manufacturers of the device from certain requirements of the good manufacturing practice regulation. The effect of this rule is to require that the device meet only the general controls applicable to all devices, except for certain requirements of the good manufacturing practice regulation. This action is being taken under the Medical Device Amendments of 1976.

EFFECTIVE DATE: October 14, 1980.

FOR FURTHER INFORMATION CONTACT: Kaiser Aziz, Bureau of Medical Devices (HFK-440), Food and Drug Administration, 8757 Georgia Ave., Silver Spring, MD 20910, 301-427-7550.

SUPPLEMENTARY INFORMATION: FDA published in the Federal Register of September 11, 1979 (44 FR 52950), a proposed regulation explaining the development of the proposed regulations classifying hematology and pathology devices, the medical device classification procedures, and the activities of the Hematology and Pathology Device Section of the Clinical Chemistry and Hematology Devices Panel (formerly the Hematology Device Classification Panel and the Pathology Device Classification Panel). FDA also published in that issue of the Federal Register (44 FR 52966) a proposed regulation to classify tissue processing equipment into class I. A period of 60 days was provided for interested persons to submit written comments to FDA.

The following is a summary of the comments received on the proposal and the agency's response to them.

1. One comment suggested that occasional failures due to operator error or equipment malfunction may result in destruction of the tissue sample. The comment noted that classification of the device into class II would provide reasonable safeguards to prevent loss of tissue because of equipment malfunction.

The agency disagrees with the comment. FDA believes that performance standards are not necessary to provide reasonable assurance of the safety and effectiveness of the device and that regulation under class I (general controls) is sufficient to control the risks to health presented by the device.

2. Two comments agreed that the device should be classified into class I, as proposed, but suggested exemptions from good manufacturing practice (GMP) requirements under section 520(f) of the Federal Food, Drug, and Cosmetic Act (the act) (21 U.S.C. 360j) and premarket notification procedures under section 510(k) of the act (21 U.S.C. 360(k)), because these requirements are not necessary to protect the public health. One of the comments suggested that accessory items, such as microscope slides, be exempt from GMP and 510(k) requirements. The second comment suggested that the device and its accessories be exempt from all GMP requirements, including § 820.180 regarding general requirements concerning records and § 820.198 regarding complaint files.

The agency partially agrees with the comments. The final regulation grants manufacturers of these devices an exemption from many of the requirements of the GMP regulation. However, the agency believes that it is necessary to receive premarket notification concerning these devices.

Based on available information about current practices used in the manufacture of the device and user experience with the device, the agency has determined that application of the GMP regulation, other than §§ 820.180 and 820.198, is unlikely to improve the safety and effectiveness of the device. The agency concludes, however, that manufacturers of tissue processing equipment must still be required to comply with the complaint file requirements of § 820.198 to ensure that these manufacturers have adequate systems for complaint investigation and followup.

The agency also concludes that manufacturers of tissue processing equipment must still be required to comply with the general requirements concerning records in § 820.180 to ensure that FDA has access to complaint files, can investigate device-related tissue damage reports and complaints about product defects, may determine whether the manufacturer's corrective actions are adequate, and may determine whether the exemption from other sections of the GMP regulation is still appropriate.

To protect the public health, the agency believes it is necessary to receive premarket notification from manufacturers to assure that FDA learns of new devices and of significant modifications of existing devices.

Accordingly, the proposed regulation has been modified to exempt manufacturers of tissue-processing equipment from the GMP regulation in Part 820, with the exception of § 820.180 with respect to general requirement concerning records and § 820.198 with respect to complaint files.

On April 28, 1978, the agency terminated all of the device classification panels and reestablished them with the same functions, but with new names and with a new structure. FDA published notices of these changes in the Federal Register of May 19, 1978 (43 FR 21666, 21667, and 21668) and May 26, 1978 (43 FR 22672 and 22673). Further information regarding the device advisory committees and a list of their new names may be found in the preamble to the general provisions, published elsewhere in this issue of the Federal Register.

Therefore, under the Federal Food, Drug, and Cosmetic Act (secs. 513, 701(a), 52 Stat. 1055, 90 Stat. 540–546 (21 U.S.C. 360c, 371(a))) and under authority delegated to him (21 CFR 5.1), the Commissioner of Food and Drugs is amending Part 864 in Subpart D by adding new § 864.3010, to read as follows:

Subpart D—Pathology Instrumentation and Accessories

§ 864.3010 Tissue processing equipment.

(a) *Identification.* Tissue processing equipment consists of devices used to prepare human tissue specimens for diagnostic histological examination by processing specimens through the various stages of decalcifying, infiltrating, sectioning, and mounting on microscope slides.

(b) *Classification.* Class I (general controls). The device is exempt from the good manufacturing practice regulation in Part 820 with the exception of § 820.180 with respect to general requirements concerning records, and § 820.198 with respect to complaint files.

Effective date. This regulation shall be effective October 14, 1980.

(Secs. 513, 701(a), 52 Stat. 1055, 90 Stat. 540–546 (21 U.S.C. 360c, 371(a)))

Dated: August 15, 1980.

William F. Randolph,

Acting Associate Commissioner for Regulatory Affairs.

[FR Doc. 80-27306 Filed 9-11-80; 8:45 am]

BILLING CODE 4110-03-M

---

21 CFR Part 864

[Docket No. 78N-1843]

Classification of Specimen Transport and Storage Containers

AGENCY: Food and Drug Administration.

ACTION: Final rule.

SUMMARY: The Food and Drug Administration (FDA) is issuing a final rule classifying specimen transport and storage containers into class I (general controls). The effect of classifying a device into class I is to require that the device meet only the general controls applicable to all devices. This action is being taken under the Medical Device Amendments of 1976.

EFFECTIVE DATE: October 14, 1980.

FOR FURTHER INFORMATION CONTACT: Kaiser Aziz, Bureau of Medical Devices (HFK-440), Food and Drug Administration, 8757 Georgia Ave., Silver Spring, MD 20910, 301-427-7550.

SUPPLEMENTARY INFORMATION: FDA published in the Federal Register of September 11, 1979 (44 FR 52950), a proposed regulation explaining the development of the proposed regulations classifying hematology and pathology devices, the medical device classification procedures, and the activities of the Hematology and Pathology Device Section of the Clinical Chemistry and Hematology Devices Panel (formerly the Hematology Device Classification Panel and the Pathology Device Classification Panel). FDA also published in that issue of the Federal Register (44 FR 52967) a proposed regulation to classify specimen transport and storage containers into class I (general controls). A period of 60 days was provided for interested persons to submit written comments to FDA.

No comments have been received regarding the proposed regulation to classify this device. The agency made minor changes in the identification of the device to specify that the rule applies to those devices that contain a fixative solution in the specimen transport and storage containers and to clarify that it only applies to specimen transport and storage containers intended for medical purposes. Accordingly, the proposed regulation is being adopted with these changes.

On April 28, 1978, the agency terminated all of the device classification panels and reestablished them with the same functions, but with new names and with a new structure. FDA published notices of these changes in the Federal Register of May 19, 1978 (43 FR 21666, 21667, and 21668) and May 26, 1978 (43 FR 22672 and 22673). Further information regarding the device advisory committees and a list of their new names may be found in the preamble to the general provisions, published elsewhere in this issue of the Federal Register.

Therefore, under the Federal Food, Drug, and Cosmetic Act (secs. 513, 701(a), 52 Stat. 1055, 90 Stat. 540–546 (21 U.S.C. 360c, 371(a))) and under authority delegated to the Commissioner of Food and Drugs (21 CFR 5.1), Part 864 is amended in Subpart D by adding new § 864.3250, to read as follows:

§ 864.3250 Specimen transport and storage container.

(a) *Identification.* A specimen transport and storage container is a device intended for medical purposes that is used to contain biological specimens in a fixative solution during storage and transport within and between clinics and laboratories in order that the specimen can effectively be used for diagnostic histological and cytological examination.

(b) *Classification.* Class I (general controls).

Effective date. This regulation shall be effective October 14, 1980.

(Secs. 513, 701(a), 52 Stat. 1055, 90 Stat. 540–546 (21 U.S.C. 360c, 371(a)))

Dated: August 15, 1980.

William F. Randolph,

Acting Associate Commissioner for Regulatory Affairs.

[FR Doc. 80-27307 Filed 9-11-80; 8:45 am]

BILLING CODE 4110-03-M

---

21 CFR Part 864

[Docket No. 78N-1844]

Classification of Cytocentrifuges

AGENCY: Food and Drug Administration.

ACTION: Final rule.

SUMMARY: The Food and Drug Administration (FDA) is issuing a final rule classifying cytocentrifuges into class I (general controls). The effect of classifying a device into class I is to require that the device meet only the general controls applicable to all devices. This action is being taken under the Medical Device Amendments of 1976.

EFFECTIVE DATE: October 14, 1980.

FOR FURTHER INFORMATION CONTACT: Kaiser Aziz, Bureau of Medical Devices (HFK-440), Food and Drug Administration, 8757 Georgia Ave., Silver Spring, MD 20910, 301-427-7550.

SUPPLEMENTARY INFORMATION: FDA published in the Federal Register of September 11, 1979 (44 FR 52950), a proposed regulation explaining the development of the proposed regulations classifying hematology and pathology devices, the medical device classification procedures, and the activities of the Hematology and Pathology Device Section of the Clinical Chemistry and Hematology Devices Panel (formerly the Hematology Device Classification Panel and the Pathology Device Classification Panel). FDA also published in that issue of the Federal Register (44 FR 52968) a proposed regulation to classify cytocentrifuges into class I (general controls). A period of 60 days was provided for interested persons to submit written comments to FDA.

No comments have been received regarding the proposed regulation to classify this device. Accordingly, the proposed regulation is being adopted without change.

On April 28, 1978, the agency terminated all of the device classification panels and reestablished them with the same functions, but with new names and with a new structure. FDA published notices of these changes in the Federal Register of May 19, 1978 (43 FR 21666, 21667, and 21668) and May 26, 1978 (43 FR 22672 and 22673). Further information regarding the device advisory committees and a list of their new names may be found in the preamble to the general provisions, published elsewhere in this issue of the Federal Register.

Therefore, under the Federal Food, Drug, and Cosmetic Act (secs. 513, 701(a), 52 Stat. 1055, 90 Stat. 540–546 (21 U.S.C. 360c, 371(a))) and under authority delegated to him (21 CFR 5.1), the Commissioner of Food and Drugs is amending Part 864 in Subpart D by adding new § 864.3300, to read as follows:

§ 864.3300 Cytocentrifuge.

(a) *Identification.* A cytocentrifuge is a centrifuge used to concentrate cells from biological cell suspensions (e.g., cerebrospinal fluid) and to deposit these cells on a glass microscope slide for cytological examination.

(b) *Classification.* Class I (general controls).

Effective date. This regulation shall be effective October 14, 1980.

(Secs. 513, 701(a), 52 Stat. 1055, 90 Stat. 540–546 (21 U.S.C. 360c, 371(a)))

Dated: August 15, 1980.

William F. Randolph,

Acting Associate Commissioner for Regulatory Affairs.

[FR Doc. 80-27306 Filed 9-11-80; 8:45 am]

BILLING CODE 4110-03-M

---

21 CFR Part 864

[Docket No. 78N-1845]

Classification of Devices for Sealing Microsections

AGENCY: Food and Drug Administration.

ACTION: Final rule.

SUMMARY: The Food and Drug Administration (FDA) is issuing a final rule classifying devices for sealing microsections into class I (general controls). The effect of classifying a device into class I is to require that the device meet only the general controls applicable to all devices. This action is being taken under the Medical Device Amendments of 1976.

EFFECTIVE DATE: October 14, 1980.

FOR FURTHER INFORMATION CONTACT: Kaiser Aziz, Bureau of Medical Devices (HFK-440), Food and Drug Administration, 8757 Georgia Ave., Silver Spring, MD 20910, 301-427-7550.

SUPPLEMENTARY INFORMATION: FDA published in the Federal Register of September 11, 1979 (44 FR 52950), a proposed regulation explaining the development of the proposed regulations classifying hematology and pathology devices, the medical device classification procedures, and the activities of the Hematology and Pathology Device Section of the Clinical Chemistry and Hematology Devices Panel (formerly the Hematology Device Classification Panel and the Pathology Device Classification Panel). FDA also published in that issue of the Federal Register (44 FR 52968) a proposed regulation to classify devices for sealing microsections into class I (general controls). A period of 60 days was provided for interested persons to submit written comments to FDA.

No comments have been received regarding the proposed regulation to classify this device. Accordingly, the proposed regulation is being adopted without change.

On April 28, 1978, the agency terminated all of the device classification panels and reestablished them with the same functions, but with new names and with a new structure. FDA published notices of these changes in the Federal Register of May 19, 1978 (43 FR 21666, 21667, and 21668) and May 26, 1978 (43 FR 22672 and 22673). Further information regarding the device advisory committees and a list of their new names may be found in the preamble to the general provisions, published elsewhere in this issue of the Federal Register.

Therefore, under the Federal Food, Drug, and Cosmetic Act (secs. 513, 701(a), 52 Stat. 1055, 90 Stat. 540–546 (21 U.S.C. 360c, 371(a))) and under authority delegated to him (21 CFR 5.1), the Commissioner of Food and Drugs is amending Part 864 in Subpart D by adding new § 864.3400, to read as follows:

§ 864.3400 Device for sealing microsections.

(a) *Identification.* A device for sealing microsections is an automated instrument used to seal stained cells and microsections for histological and cytological examination.

(b) *Classification.* Class I (general controls).

Effective date. This regulation shall be effective October 14, 1980.

(Secs. 513, 701(a), 52 Stat. 1055, 90 Stat. 540–546 (21 U.S.C. 360c, 371(a)))

Dated: August 15, 1980.

William F. Randolph,

Acting Associate Commissioner for Regulatory Affairs.

[FR Doc. 80-27309 Filed 9-11-80; 8:45 am]

BILLING CODE 4110-03-M

---

21 CFR Part 864

[Docket No. 78N-1846]

Classification of Microscopes and Accessories

AGENCY: Food and Drug Administration.

ACTION: Final rule.

SUMMARY: The Food and Drug Administration (FDA) is issuing a final rule classifying microscopes and accessories into class I (general controls) and exempting manufacturers of the device from certain requirements of the good manufacturing practice regulation. The effect of this rule is to require that the device meet only the general controls applicable to all devices, except for certain requirements of the good manufacturing practice regulation. This action is being taken under the Medical Device Amendments of 1976.

EFFECTIVE DATE: October 14, 1980.

FOR FURTHER INFORMATION CONTACT: Kaiser Aziz, Bureau of Medical Devices (HFK-440), Food and Drug Administration, 8757 Georgia Ave., Silver Spring, MD 20910, 301-427-7550.

SUPPLEMENTARY INFORMATION: FDA published in the Federal Register of September 11, 1979 (44 FR 52950), a proposed regulation explaining the development of the proposed regulations classifying hematology and pathology devices, the medical device classification procedures, and the activities of the Hematology and Pathology Device Section of the Clinical Chemistry and Hematology Devices Panel (formerly the Hematology Device Classification Panel and the Pathology Device Classification Panel). FDA also published in that issue of the Federal Register (44 FR 52969) a proposed regulation to classify microscopes and accessories into class I (general controls). A period of 60 days was provided for interested persons to submit written comments to FDA.

No comments have been received regarding the proposed regulation to classify this device. However, the proposed regulation is being changed to clarify that it only applies to microscopes and accessories for medical purposes and to exempt microscopes and accessories from the GMP regulation, except § 820.180 and § 820.198.

The agency has determined that compliance with the GMP regulation, except for § 820.180 (general requirements concerning records) and § 820.198 (complaint files), is not required to assure that microscopes and accessories will be safe and effective and otherwise in compliance with the act. The agency has based its determination on available information about current practices used in the manufacture of the device and user experience with the device. The agency is not exempting manufacturers of microscopes and accessories from the requirements of §§ 820.180 and 820.198 because it has determined that compliance with these sections is in the public interest and will not be unduly burdensome for device manufacturers.

There are two procedures by which FDA may exempt a manufacturer of a device from complying with any or all of the requirements of the GMP regulation. First, a manufacturer of a device subject to any requirement under the GMP regulation may petition the agency pursuant to section 520(f)(2)(A) of the act (21 U.S.C. 360j(f)(2)(A)) for an exemption or variance from the requirement. An exemption granted in response to such a petition applies only to the manufacturer who submitted the petition. Second, in classifying a medical device into class I under section 513 of

the act (21 U.S.C. 360c), the agency may determine that certain of the requirements of the GMP regulation shall not apply to the device. In that instance, the exemption applies to all manufacturers of the generic type of device that is the subject of the classification regulation. The agency may grant an exemption under either procedure only if it determines that the device will be safe and effective and otherwise in compliance with the act.

The agency previously granted a manufacturer's petition (79P-0299) for exemption of its general purpose microscopes and accessories from the requirement of the GMP regulation, except § 820.180 (general requirements concerning records) and § 820.198 (complaint files). As explained above, that exemption applied only to the petitioner. In this regulation classifying microscopes and accessories FDA is exempting from certain sections of the GMP regulation all manufacturers of this generic type of device. This action is consistent with the agency's policies and criteria for exemption discussed in the preamble to the proposed general provisions for this Part, published in the Federal Register of September 11, 1979 (44 FR 52950). Additional information regarding the procedures for petitioning for exemptions or variances from the GMP regulation is available, as described in a notice published in the Federal Register of January 18, 1980 (45 FR 3671).

On April 28, 1978, the agency terminated all of the device classification panels and reestablished them with the same functions, but with new names and with a new structure. FDA published notices of these changes in the Federal Register of May 19, 1978 (43 FR 21666, 21667, and 21668) and May 26, 1978 (43 FR 22672 and 22673). Further information regarding the device advisory committees and a list of their new names may be found in the preamble to the general provisions, published elsewhere in this issue of the Federal Register.

Therefore, under the Federal Food, Drug, and Cosmetic Act (secs. 513, 701(a), 52 Stat. 1055, 90 Stat. 540-546 (21 U.S.C. 360c, 371(a))) and under authority delegated to the Commissioner of Food and Drugs (21 CFR 5.1), Part 864 is amended in Subpart D by adding new § 864.3600, to read as follows:

§ 864.3600 Microscopes and accessories.

(a) *Identification.* Microscopes and accessories are optical instruments used to enlarge images of specimens, preparations, and cultures for medical purposes. Variations of microscopes and accessories (through a change in the light source) used for medical purposes include the following:

(1) Phase contrast microscopes, which permit visualization of unstained preparations by altering the phase relationship of light that passes around the object and through the object.

(2) Fluorescense microscopes, which permit examination of specimens stained with fluorochromes that fluoresce under ultraviolet light.

(3) Inverted stage microscopes, which permit examination of tissue cultures or other biological specimens contained in bottles or tubes with the light source mounted above the specimen.

(b) *Classification.* Class I (general controls). The device is exempt from the good manufacturing practice regulation in Part 820, with the exception of § 820.180, with respect to general requirements concerning records, and § 820.198 with respect to complaint files.

Effective date. This regulation shall be effective October 14, 1980.

(Secs. 513, 701(a), 52 Stat. 1055, 90 Stat. 540-546 (21 U.S.C. 360c, 371(a)))

Dated: August 15, 1980.

William F. Randolph,

Acting Associate Commissioner for Regulatory Affairs.

[FR Doc. 80-27310 Filed 9-11-80; 8:45 am]

BILLING CODE 4110-03-M

---

21 CFR Part 864

[Docket No. 78N-1847]

Classification of Automated Slide Stainers

AGENCY: Food and Drug Administration.

ACTION: Final rule.

SUMMARY: The Food and Drug Administration (FDA) is issuing a final rule classifying automated slide stainers into class I (general controls). The effect of classifying a device into class I is to require that the device meet only the general controls applicable to all devices. This action is being taken under the Medical Device Amendments of 1976.

EFFECTIVE DATE: October 14, 1980.

FOR FURTHER INFORMATION CONTACT: Kaiser Aziz, Bureau of Medical Devices (HFK-440), Food and Drug Administration, 8757 Georgia Ave., Silver Spring, MD 20910, 301-427-7550.

SUPPLEMENTARY INFORMATION: FDA published in the Federal Register of September 11, 1979 (44 FR 52950), a proposed regulation explaining the development of the proposed regulations classifying hematology and pathology devices, the medical device classification procedures, and the activities of the Hematology and Pathology Device Section of the Clinical Chemistry and Hematology Devices Panel (formerly the Hematology Device Classification Panel and the Pathology Device Classification Panel). FDA also published in that issue of the Federal Register (44 FR 52970) a proposed regulation to classify automated slide stainers into class I (general controls). A period of 60 days was provided for interested persons to submit written comments to FDA.

The one comment received on the proposal suggested that automated slide stainers be exempt from all GMP requirements, including § 820.180 regarding general requirements concerning records and § 820.198 regarding complaint files, because the examiner can easily determine whether the device is effective by inspection of the end product. The comment noted that changes in staining properties, the presence or absence of artifacts, and other properties of slides produced by automated systems which may differ from those prepared manually, can be described fully in the device labeling.

The agency disagrees with the comment. FDA believes that compliance with the GMP regulation is necessary to assure the quality and reliability of automated slide stainers, and thus their safety, effectiveness and compliance with the adulteration and misbranding provisions of the act. The agency also believes that compliance with the GMP regulation will help prevent production of these devices with defects that could result in the loss of tissue samples, such as biopsy specimens, where it may be difficult to obtain a second specimen. Accordingly, the proposed regulation is being adopted without change.

On April 28, 1978, the agency terminated all of the device classification panels and reestablished them with the same functions, but with new names and with a new structure. FDA published notices of these changes in the Federal Register of May 19, 1978 (43 FR 21666, 21667, and 21668) and May 26, 1978 (43 FR 22672 and 22673). Further information regarding the device advisory committees and a list of their new names may be found in the preamble to the general provisions, published elsewhere in this issue of the Federal Register.

Therefore, under the Federal Food, Drug, and Cosmetic Act (secs. 513, 701(a), 52 Stat. 1055, 90 Stat. 540-546 (21 U.S.C. 360c, 371(a))) and under authority delegated to him (21 CFR 5.1), the Commissioner of Food and Drugs is amending Part 864 in Subpart D by adding new § 864.3600, to read as follows:

§ 864.3800 Automated slide stainer.

(a) *Identification.* An automated slide stainer is a device used to stain histology, cytology, and hematology slides for diagnosis.

(b) *Classification.* Class I (general controls).

Effective date. This regulation shall be effective October 14, 1980.

(Secs. 513, 701(a), 52 Stat. 1055, 90 Stat. 540–546 (21 U.S.C. 360c, 371(a)))

Dated: August 15, 1980.

William F. Randolph,

Acting Associate Commissioner for Regulatory Affairs.

[FR Doc. 80-27311 Filed 9-11-80; 8:45 am]

BILLING CODE 4110-03-M

---

21 CFR Part 864

[Docket No. 78N-1848]

Classification of Automated Tissue Processors

AGENCY: Food and Drug Administration.

ACTION: Final rule.

SUMMARY: The Food and Drug Administration (FDA) is issuing a final rule classifying automated tissue processors into class I (general controls). The effect of classifying a device into class I is to require that the device meet only the general controls applicable to all devices. This action is being taken under the Medical Device Amendments of 1976.

EFFECTIVE DATE: October 14, 1980.

FOR FURTHER INFORMATION CONTACT: Kaiser Aziz, Bureau of Medical Devices (HFK-440), Food and Drug Administration, Department of Health, Education, and Welfare, 8757 Georgia Ave., Silver Spring, MD 20910, 301-427-7550.

SUPPLEMENTARY INFORMATION: FDA published in the Federal Register of September 11, 1979 (44 FR 52950), a proposed regulation explaining the development of the proposed regulations classifying hematology or pathology devices, the medical device classification procedures, and the activities of the Hematology and Pathology Device Section of the Clinical Chemistry and Hematology Devices Panel (formerly the Hematology Device Classification Panel and the Pathology Device Classification Panel). FDA also published in that issue of the Federal Register (44 FR 52971) a proposed regulation to classify automated tissue processors into class I (general controls). A period of 60 days was provided for interested persons to submit comments to FDA.

The following is a summary of the comments received on the proposal and the agency's response to them:

1. One comment suggested that the device be classified into class II to provide reasonable safeguards against tissue damage or loss due to operator error or equipment malfunction.

FDA rejects the comment. The agency believes that classification of the device into class I (general controls) is sufficient to provide reasonable assurance of the safety and effectiveness of the device.

2. One comment stated that the device should be exempted from GMP requirements because production of an unsatisfactory section of tissue is usually the result of operator error, paraffin or reagent contamination, or other failure not controllable by the manufacturer of the device. Thus, manufacturer's compliance with GMP requirements would have minimal effects in reducing these failures.

FDA rejects the comment. The agency believes that compliance with the GMP regulation is necessary to prevent production of devices having defects that could result in loss of a tissue sample, such as a biopsy specimen, where it may be difficult to obtain a second specimen. Compliance with the GMP regulation is necessary to assure the quality of this device and thus its safety, effectiveness, and compliance with the adulteration and misbranding provisions of the act. Compliance with the GMP regulation will help prevent production of automated tissue processors having defects that could harm users.

Accordingly, the proposed regulation is being adopted without change.

On April 28, 1978, the agency terminated all of the device classification panels and reestablished them with the same functions, but with new names and with a new structure. FDA published notices of these changes in the Federal Register of May 19, 1978 (43 FR 21666, 21667, and 21668) and May 26, 1978 (43 FR 22672 and 22673). Further information regarding the device advisory committees and a list of their new names may be found in the preamble to the general provisions, published elsewhere in this issue of the Federal Register.

Therefore, under the Federal Food, Drug, and Cosmetic Act (secs. 513, 701(a), 52 Stat. 1055, 90 Stat. 540–546 (21 U.S.C. 360c, 371(a))) and under authority delegated to the Commissioner of Food and Drugs (21 CFR 5.1), Part 864 is amended in Subpart D by adding new § 864.3875, to read as follows:

§ 864.3875 Automated tissue processor.

(a) *Identification.* An automated tissue processor is an automated system used to process tissue specimens for examination through fixation, dehydration, and infiltration.

(b) *Classification.* Class I (general controls).

Effective date. This regulation shall be effective October 14, 1980.

(Secs. 513, 701(a), 52 Stat. 1055, 90 Stat. 540–546 (21 U.S.C. 360c, 371(a)))

Dated: August 15, 1980.

William F. Randolph,

Acting Associate Commissioner for Regulatory Affairs.

[FR Doc. 80-27312 Filed 9-11-80; 8:45 am]

BILLING CODE 4110-03-M

---

21 CFR Part 864

[Docket No. 78N-1849]

Classification of General Purpose Reagents

AGENCY: Food and Drug Administration.

ACTION: Final rule.

SUMMARY: The Food and Drug Administration (FDA) is issuing a final rule classifying general purpose reagents into class I (general controls) and exempting manufacturers of the device from certain requirements of the good manufacturing practice regulation. The effect of this rule is to require that the device meet only the general controls applicable to all devices, except for certain requirements of the good manufacturing practice regulation. This action is being taken under the Medical Device Amendments of 1976.

EFFECTIVE DATE: October 14, 1980.

FOR FURTHER INFORMATION CONTACT: Kaiser Aziz, Bureau of Medical Devices (HFK-440), Food and Drug Administration, 8757 Georgia Ave., Silver Spring, MD 20910, 301-427-7550.

SUPPLEMENTARY INFORMATION: FDA published in the Federal Register of September 11, 1979 (44 FR 52950), a proposed regulation explaining the development of the proposed regulations classifying hematology and pathology devices, the medical device classification procedures, and the activities of the Hematology and Pathology Device Section of the Clinical Chemistry and Hematology Devices Panel (formerly the Hematology Device Classification Panel and the Pathology Device Classification Panel). FDA also published in that issue of the Federal Register (44 FR 52972) a proposed regulation to classify general purpose reagents into class I (general controls). A period of 60 days was provided for

interested persons to submit written comments to FDA.

The one comment received on the proposal suggested that general purpose reagents be exempted from all the GMP requirements including § 820.180 and § 820.198 of the regulation and from the premarket notification procedures in section 510(k) of the act because these products present a low risk to the patient and the imposition of GMP requirements and premarket notification procedures will not significantly improve their safety or effectiveness.

The agency rejects the comment. FDA believes that manufacturers of general purpose reagents must be required to comply with the complaint file requirements of § 820.198 to ensure that these manufacturers have adequate systems for complaint investigation and follow-up. The agency also believes these manufacturers must be required to comply with the general requirements concerning records in § 820.180 to ensure that FDA has access to complaint files, can investigate device-related injury reports and complaints about product defects. To protect the public health, the agency believes it is necessary to receive premarket notification from manufacturers of these products to assure that FDA learns of new devices and of significant modifications of existing devices.

Accordingly, the proposed regulation is being adopted with a minor clarifying change.

On April 28, 1978, the agency terminated all of the device classification panels and reestablished them with the same functions, but with new names and with a new structure. FDA published notices of these changes in the Federal Register of May 19, 1978 (43 FR 21666, 21667, and 21668) and May 26, 1978 (43 FR 22672 and 22673). Further information regarding the device advisory committees and a list of their new names may be found in the preamble to the general provisions, published elsewhere in this issue of the Federal Register.

Therefore, under the Federal Food, Drug, and Cosmetic Act (secs. 513, 701(a), 52 Stat. 1055, 90 Stat. 540–546 (21 U.S.C. 360c, 371(a))) and under authority delegated to the Commissioner of Food and Drugs (21 CFR 5.1), Part 864 is amended in Subpart E by adding new § 864.4010, to read as follows:

Subpart E—Specimen Preparation Reagents

§ 864.4010 General purpose reagent.

(a) *Identification.* A general purpose reagent is a chemical reagent that has general laboratory application, that is used to collect, prepare, and examine specimens from the human body for diagnostic histopathology, cytology, and hematology, and that is not labeled or otherwise intended for a specific diagnostic application. General purpose reagents include cytological preservatives, decalcifying reagents, fixatives and adhesives, tissue processing reagents, isotonic solutions, and pH buffers.

(b) *Classification.* Class I (general controls). If the devices are not labeled or otherwise represented as sterile, they are exempt from the good manufacturing practice regulation in Part 820, with the exception of § 820.180, with respect to general requirements concerning records, and § 820.198, with respect to complaint files.

Effective date. This regulation shall be effective October 14, 1980.

(Secs. 513, 701(a), 52 Stat. 1055, 90 Stat. 540–546 (21 U.S.C. 360c, 371(a)))

Dated: August 15, 1980.

William F. Randolph,

Acting Associate Commissioner for Regulatory Affairs.

[FR Doc. 80-27313 Filed 9-11-80; 8:45 am]

BILLING CODE 4110-03-M

---

21 CFR Part 864

[Docket No. 78N-1850]

Classification of Enzyme Preparations

AGENCY: Food and Drug Administration.

ACTION: Final rule.

SUMMARY: The Food and Drug Administration (FDA) is issuing a final rule classifying enzyme preparations into class I (general controls). The effect of classifying a device into class I is to require that the device meet only the general controls applicable to all devices. This action is being taken under the Medical Device Amendments of 1976.

EFFECTIVE DATE: October 14, 1980.

FOR FURTHER INFORMATION CONTACT: Kaiser Aziz, Bureau of Medical Devices (HFK-440), Food and Drug Administration, 8757 Georgia Ave., Silver Spring, MD 20910, 301-427-7550.

SUPPLEMENTARY INFORMATION: FDA published in the Federal Register of September 11, 1979 (44 FR 52950), a proposed regulation explaining the development of the proposed regulations classifying hematology and pathology devices, the medical device classification procedures, and the activities of the Hematology and Pathology Device Section of the Clinical Chemistry and Hematology Devices Panel (formerly the Hematology Device Classification Panel and the Pathology Device Classification Panel). FDA also published in that issue of the Federal Register (44 FR 52973) a proposed regulation to classify enzyme preparations into class I (general controls). A period of 60 days was provided for interested persons to submit written comments to FDA.

No comments have been received regarding the proposed regulation to classify this device. Accordingly, the proposed regulation is being adopted without change.

On April 28, 1978, the agency terminated all of the device classification panels and reestablished them with the same functions, but with new names and with a new structure. FDA published notices of these changes in the Federal Register of May 19, 1978 (43 FR 21666, 21667, and 21668) and May 26, 1978 (43 FR 22672 and 22673). Further information regarding the device advisory committees and a list of their new names may be found in the preamble to the general provisions, published elsewhere in this issue of the Federal Register.

Therefore, under the Federal Food, Drug, and Cosmetic Act (secs. 513, 701(a), 52 Stat. 1055, 90 Stat. 540–546 (21 U.S.C. 360c, 371(a))) and under authority delegated to him (21 CFR 5.1), the Commissioner of Food and Drugs is amending Part 864 in Subpart E by adding new § 864.4400, to read as follows:

§ 864.4400 Enzyme preparations.

(a) *Identification.* Enzyme preparations are products that are used in the histopathology laboratory for the following purposes:

(1) To disaggregate tissues and cells already in established cultures for preparation into subsequent cultures (e.g., trypsin);

(2) To disaggregate fluid specimens for cytological examination (e.g., papain for gastric lavage or trypsin for sputum liquefaction);

(3) To aid in the selective staining of tissue specimens (e.g., diastase for glycogen determination).

(b) *Classification.* Class I (general controls).

Effective date. This regulation shall be effective October 14, 1980.

(Secs. 513, 701(a), 52 Stat. 1055, 90 Stat. 540–546 (21 U.S.C. 360c, 371(a)))

Dated: August 15, 1980.

William F. Randolph,

Acting Associate Commissioner for Regulatory Affairs.

[FR Doc. 80-27314 Filed 9-11-80; 8:45 am]

BILLING CODE 4110-03-M

21 CFR Part 864

[Docket No. 78N-1851]

Classification of Automated Cell Counters

AGENCY: Food and Drug Administration.

ACTION: Final rule.

SUMMARY: The Food and Drug Administration (FDA) is issuing a final rule classifying automated cell counters into class II (performance standards). The effect of classifying a device into class II is to provide for the future development of one or more performance standards to assure the safety and effectiveness of the device. This action is being taken under the Medical Device Amendments of 1976.

EFFECTIVE DATE: October 14, 1980.

FOR FURTHER INFORMATION CONTACT: Kaiser Aziz, Bureau of Medical Devices (HFK-440), Food and Drug Administration, 8757 Georgia Ave., Silver Spring, MD 20910, 301-427-7550.

SUPPLEMENTARY INFORMATION: FDA published in the Federal Register of September 11, 1979 (44 FR 52950), a proposed regulation explaining the development of the proposed regulations classifying hematology and pathology devices, the medical device classification procedures, and the activities of the Hematology and Pathology Device Section of the Clinical Chemistry and Hematology Devices Panel (formerly the Hematology Device Classification Panel and the Pathology Device Classification Panel). FDA also published in that issue of the Federal Register (44 FR 52974) a proposed regulation to classify automated cell counters into class II (performance standards). A period of 60 days was provided for interested persons to submit written comments to FDA.

The following is a summary of the comments received on the proposal and the agency's response to them:

1. One comment stated that the proposed regulation is misleading in implying that FDA was making a distinction between electronic cell counters and semi-automated cell counters when this was not the case.

FDA agrees with the comment. The agency intended that this regulation cover both automated and semi-automated cell counters, and the phrase "semi-automated or" should not have been used in the second paragraph of the proposed classification section in the preamble of the proposal. Therefore, FDA has clarified the device identification.

2. One comment suggested that cell counters which may be calibrated by the user should be classified into class II, and that cell counters which are precalibrated by the manufacturer and provide no user calibration procedures should be classified into class I.

FDA disagrees with this comment. The agency believes that performance standards are necessary for both types of cell counters to control the risks to health that may result if these devices lack various attributes, such as reliability, accuracy, specificity, sensitivity, and precision.

3. One comment concurred with the proposed classification into class II but recommended that FDA and the Panel provide valid reasons in support of this classification.

FDA disagrees with the comment. The agency believes that adequate data were provided in the proposal to support classification of the device into class II.

4. One comment noted that § 809.10 requires that the labeling for in vitro diagnostic products enumerate performance specifications, limitations, hazards, etc., and that a performance standard should not contain labeling requirements that would duplicate those in § 809.10. The comment requested that the Panel and FDA specify the deficiencies in current product labeling.

FDA disagrees with this comment. The agency believes that a discussion of labeling requirements for the device is not appropriate at this time. Labeling requirements are an integral part of the standards development process and may also be prescribed in separate labeling regulations that supplement § 809.10.

5. One comment requested the agency to demonstrate how the imposition of performance standards would assure safety and effectiveness to a greater extent than the requirements of § 809.10.

FDA believes that performance standards would assure safety and effectiveness to a greater extent than the in vitro labeling requirements, because performance standards would specify acceptable ranges for performance characteristics, such as accuracy, precision, sensitivity, and reliability, that are based on valid scientific studies.

6. One comment suggested that automated cell counters be regulated as class I devices, because they are not for use in supporting, sustaining, or preventing impairment of human life of health and do not present a potential unreasonable risk of illness or injury.

FDA disagrees with this comment. FDA notes that the criteria that the comment claims are inapplicable to the device are those for classifying devices into class III (premarket approval). The agency believes that the data presented in the proposed regulation adequately supports the classification of these devices into class II. The agency believes that performance standards are necessary to provide reasonable assurance of the safety and effectiveness of the device.

7. One comment suggested that the regulation be amended to recognize two types of automated cell counters, those using electronic particle counting and those using optical particle counting procedures.

FDA agrees with this comment. The identification has been changed as suggested.

8. One comment noted that automated or semi-automated cell counters that do not measure or calculate the red cell indices are not classified in this regulation or any other proposed classification regulation for hematology and pathology devices.

FDA disagrees with this comment. The proposal was intended to classify automated or semi-automated cell counters whether or not they measure or calculate the red cell indices. The agency acknowledges that the proposed identification for the device was unclear. Therefore, the identification has been changed to reflect the agency's intent. Accordingly, the regulation has been modified to include the noted changes.

On April 28, 1978, the agency terminated all of the device classification panels and reestablished them with the same functions, but with new names and with a new structure. FDA published notices of these changes in the Federal Register of May 19, 1978 (43 FR 21666, 21667, and 21668) and May 26, 1978 (43 FR 22672 and 22673). Further information regarding the device advisory committees and a list of their new names may be found in the preamble to the general provisions, published elsewhere in this issue of the Federal Register.

Therefore, under the Federal Food, Drug, and Cosmetic Act (secs. 513, 701(a), 52 Stat. 1055, 90 Stat. 540-546 (21 U.S.C. 360c, 371(a))) and under authority delegated to him (21 CFR 5.1), the Commissioner of Food and Drugs is amending Part 864 in Subpart F by adding new § 864.5200, to read as follows:

Subpart F—Automated and Semi-Automated Hematology Devices

§ 864.5200 Automated cell counter.

(a) *Identification.* An automated cell counter is a fully-automated or semi-automated device used to count red blood cells, white blood cells, or blood platelets using a sample of the patient's

peripheral blood (blood circulating in one of the body's extremities, such as the arm). These devices may also measure hemoglobin or hematocrit and may also calculate or measure one or more of the red cell indices (the erythrocyte mean corpuscular volume, the mean corpuscular hemoglobin, or the mean corpuscular hemoglobin concentration). These devices may use either an electronic particle counting method or an optical counting method.

(b) *Classification.* Class II (performance standards).

Effective date. This regulation shall be effective October 14, 1980.

(Secs. 513, 701(a), 52 Stat. 1055, 90 Stat. 540-546 (21 U.S.C. 360c, 371(a)))

Dated: August 15, 1980.

William F. Randolph,

Acting Associate Commissioner for Regulatory Affairs.

[FR Doc. 80-27315 Filed 9-11-80; 8:45 am]

BILLING CODE 4110-03-M

---

21 CFR Part 864

[Docket No. 78N-1852]

Classification of Automated Differential Cell Counters

AGENCY: Food and Drug Administration.

ACTION: Final rule.

SUMMARY: The Food and Drug Administration (FDA) is issuing a final rule classifying automated differential cell counters into class III (premarket approval). The effect of classifying a device into class III is to require each manufacturer of the device to submit to FDA a premarket approval application that includes information concerning safety and effectiveness tests for the device. Each premarket approval application must be submitted to FDA on or before April 29, 1983, or 90 days after promulgation of a separate regulation requiring premarket approval of the device, whichever occurs later. This action is being taken under the Medical Device Amendments of 1976.

EFFECTIVE DATE: October 14, 1980.

FOR FURTHER INFORMATION CONTACT: Kaiser Aziz, Bureau of Medical Devices (HFK-440), Food and Drug Administration, 8757 Georgia Ave., Silver Spring, MD 20910, 301-427-7550.

SUPPLEMENTARY INFORMATION: FDA published in the Federal Register of September 11, 1979 (44 FR 52950), a proposed regulation explaining the development of the proposed regulations classifying hematology and pathology devices, the medical device classification procedures, and the activities of the Hematology and Pathology Device Section of the Clinical Chemistry and Hematology Devices Panel (formerly the Hematology Device Classification Panel and the Pathology Device Classification Panel). FDA also published in that issue of the Federal Register (44 FR 52975) a proposed regulation to classify automated differential cell counters into class III (premarket approval). A period of 60 days was provided for interested persons to submit written comments to FDA.

Several comments were received on the proposal. The following is a summary of these comments and the agency's response to them:

1. One comment stated that the identification is too broad. The comment noted that to define an automated differential cell counter as "a device used to identify and classify one or more of the formed elements of the blood" is to include automated cell counters as well.

FDA disagrees with the comment. Automated cell counters are identified in a separate classification regulation that is published elsewhere in this issue of the Federal Register. Because automated cell counters are not used to classify specific cell types these counters are not covered by the identification of automated differential cell counters.

2. Four comments stated that the proposed regulation states erroneously that automated differential cell counters have replaced the operator's judgment in the identification of suspect cells. The comments noted that the device flags suspect cells for identification by the operator.

FDA disagrees with the comment. Certainly the operator should be responsible for classifying suspect cells. However, some automated differential cell counters print differential results without operator review of the suspect cells. Two products do not flag suspect cells for operator identification, but flag the blood specimen as suspect or abnormal. Therefore, the report provided by these two products does not merely classify suspect cells or flag them for operator review but replaces the operator's judgment.

3. Several comments stated that automated differential cell counters do not claim to identify abnormal cells positively; rather, these devices accurately recognize and differentiate normal from abnormal cells. The comments protested that the device's manufacturers do not make the claims for the devices that FDA described in the proposed regulation.

FDA disagrees with this comment. The labeling for several devices claims to identify accurately abnormal cell classes (types) such as atypical lymphocytes, blast cells, and immature granulocytes. Even without such labeling, the intended use of the device can be inferred from the availability with several instruments at "no review" mode that allows the printing and transmission of differential counts, including these cell classifications, without operator review.

4. One comment objected to the statement that the "ability to accurately identify abnormal cells remains to be established," noting that at least one instrument effectively identifies the presence of abnormal cells by rejecting blood samples from patients with serious white cell hematological disorders.

FDA disagrees with the comment's interpretation of the process of identifying abnormal cells. A device that rejects blood samples exhibiting serious white cell disorders does not provide an accurate identification of an abnormal cell type. As Bacus indicates (Ref. 2), the ability of these devices to identify abnormal cells is at a "rudimentary" state of development.

5. Several comments stated that automated differential cell counters only claim to do what a technologist does during a manual differential count, but with greater speed and precision. Several comments pointed out the error rate in manual differential counts and the statistical error due to performing counts of 100 cells rather than a larger sample. They noted that misclassification of cell types occurs quite often with manual counts, and therefore the automated device's limitations in that regard are no worse than performing manual differential cell counts. One comment suggested that a general performance standard be developed for differential counting, both automated and manual.

FDA partially agrees with these comments. Some automated differential cell counts are more precise than manual counts, and for certain cell classes, the two methodologies exhibit comparable accuracy. However, there is sufficient controversy as to the differentiation of band neutrophils from segmented neutrophils, the differentiation of atypical lymphocytes from normal lymphocytes, and other cell classifications (Refs. 1 through 4) to preclude the development at this time of a performance standard for automated differential cell counting devices.

6. Several comments stated that automated differential cell counters do not claim diagnostic significance. They noted that the physician, not the instrument, makes the diagnosis.

Therefore, the device does not present a potential unreasonable risk to the patient.

FDA disagrees with this comment. The device provides information that is essential to a diagnosis. An inaccurate differential count can result in misdiagnosis and subsequent inappropriate therapy.

7. Several comments stated that sufficient information exists to write a performance standard for automated differential cell counters. Examples of standards suggested by comments included the National Committee for Clinical Laboratory Standards PSH-20 and an International Committee on Standards in Hematology. Several comments also noted that FDA's request for proposal (FRP) 223-79-5071 implies that the criteria to establish a performance standard do exist. Manufacturers submitted evaluation protocols for their devices as evidence that a standard can be developed.

FDA partially agrees with this comment. As indicated in the response to comment 5, performance standards for the differential counting of certain leukocyte classes could be developed. However, FDA RFP 223-79-5071 describes a project to develop (or select) procedures to measure and assess the performance characteristics of automated differential cell counters to provide FDA with information to be used in the agency's premarket approval procedure.

8. Several comments objected to the language in the proposed regulation that describes Dr. Robert Miller's presentation to the Panel. The comments believed the language used indicated that Dr. Miller was critical of the automated differential cell counting devices. The comments noted that Dr. Miller did not offer any opinions for or against these devices.

FDA agrees that Dr. Miller was neither for, nor against, these devices. Dr. Miller's presentation was a discussion of various areas that would be relevant to an evaluation of automated differential cell counters. FDA also agrees that the language used in the proposal may not have been clear.

9. Several comments stated that the risk of hepatitis infection does not apply to automated differential cell counters but rather to automated slide spinners.

FDA agrees that the risk of hepatitis infection is associated with automated slide spinners and not automated differential cell counters.

10. One comment noted that automated cell counters are no less important than automated differential cell counters, yet FDA proposed to classify automated cell counters into class II while proposing to classify automated differential cell counters into class III.

FDA agrees that both generic devices provide information of diagnostic importance. However, FDA proposed that automated cell counters be classified into class II because the Panel and FDA believe that sufficient information exists to establish a performance standard for the device. However, neither the Panel nor the agency believe that a standard could be developed for all uses of automated differential cell counters.

11. One comment suggested that automated differential cell counters be split into two types, depending on whether they employ flow systems or pattern recognition systems, and that counters employing flow systems be placed in class II.

FDA does not believe that it is appropriate to issue separate regulations for counters employing flow systems and those employing pattern recognition systems. Because both types of automated differential cell counters should be classified into class III, both types are included in the identification in this regulation.

12. Several comments stated that the literature provided in support of the proposed classification was outdated and in some instances was misinterpreted, and that the literature cited represented a very narrow selection and emphasized only the negative aspect of automated differential cell counters. The comments asserted that the literature cited in the proposal did not support the proposed class III classification.

Although FDA believes that the information, including the literature, cited in the proposal was sufficient to support classification of the device into class III, FDA is providing additional references (listed below) that provide additional support for this decison.

13. Two comments asserted that the Panel members had limited experience with automated differential cell counters at the time they made their recommendation. The comments suggested that the experience gained by the Panel since then would suggest a change in the recommendation.

FDA agrees that both the Panel and the agency have become more familiar with these devices since the original recommendation was made. However, the Panel and the agency still believe that these devices should be classified into class III.

On November 19, 1979, FDA held a public meeting of the Hematology Devices Section of the Clinical Chemistry and Hematology Devices Panel to consider the comments received on the proposal to classify automated differential cell counters into class III. At that meeting, a representative of the Health Industry Manufacturers' Association (HIMA), presented HIMA's view that automated differential cell counters should be placed in class II rather than class III as proposed. A representative of Technicon Instruments Corporation, presented his view that flow systems for automated differential cell counting should be placed into class II.

After considering the comments, the additional testimony presented at the public meeting and the Section's recommendation that the device be classified into class III as proposed, FDA has concluded that there is not sufficient information available to write a performance standard for this device. FDA is classifying the device into class III as proposed. Accordingly, FDA is adopting the proposed regulation without change.

References

The following information has been placed in the office of the Hearing Clerk, Food and Drug Administration, Rm. 4-62, 5600 Fishers Lane, Rockville, MD 20857, and may be seen by interested persons from 9 a.m. to 4 p.m., Monday through Friday.

1. Koepke, J. A., "A Delineation of Performance Criteria for the Differentiation of Leukocytes," *American Journal of Clinical Pathology*, 68:202-206, 1977.

2. Bacus, J. W., "The Development of Automated Differential Systems," *Pathologist*, 33(3):127-141, 1979.

3. Mui, J. K., K. S. Fu, and J. W. Bacus, "Automated Classification of Blood Cell Neutrophils," *Journal of Histochemistry and Cytochemistry*, 25:633-640, 1977.

4. Nosanchuk, J. S., P. Dawes, A. Kelly, and C. Heckler, "An Automated Blood Smear Analysis System," *American Journal of Clinical Pathology*, 73:165-171, 1980.

On April 28, 1978, the agency terminated all of the device classification panels and reestablished them with the same functions, but with new names and with a new structure. FDA published notices of these changes in the Federal Register of May 19, 1978 (43 FR 21666, 21667, and 21668) and May 26, 1978 (43 FR 22672 and 22673). Further information regarding the device advisory committees and a list of their new names may be found in the preamble to the general provisions, published elsewhere in this issue of the Federal Register.

Therefore, under the Federal Food, Drug, and Cosmetic Act (secs. 513, 701(a), 52 Stat. 1055, 90 Stat. 540-546 (21 U.S.C. 360c, 371(a))) and under authority

delegated to him (21 CFR 5.1), the Commissioner of Food and Drugs is amending Part 864 in Subpart F by adding new § 864.5220, to read as follows:

§ 864.5220 Automated differential cell counter.

(a) *Identification.* An automated differential cell counter is a device used to identify and classify one or more of the formed elements of the blood.

(b) *Classification.* Class III (premarket approval).

Effective date. This regulation shall be effective October 14, 1980.

(Secs. 513, 701(a), 52 Stat. 1055, 90 Stat. 540–546 (21 U.S.C. 360c, 371(a)))

Dated: August 15, 1980.

William F. Randolph,

Acting Associate Commissioner for Regulatory Affairs.

[FR Doc. 80-27316 Filed 9-11-80; 8:45 am]

BILLING CODE 4110-03-M

---

21 CFR Part 864

[Docket No. 78N-1853]

Classification of Automated Blood Cell Diluting Apparatus

AGENCY: Food and Drug Administration.

ACTION: Final rule.

SUMMARY: The Food and Drug Administration (FDA) is issuing a final rule classifying automated blood cell diluting apparatus into class I (general controls). The effect of classifying a device into class I is to require that the device meet only the general controls applicable to all devices. This action is being taken under the Medical Device Amendments of 1976.

EFFECTIVE DATE: October 14, 1980.

FOR FURTHER INFORMATION CONTACT: Kaiser Aziz, Bureau of Medical Devices (HFK-440), Food and Drug Administration, 8757 Georgia Ave., Silver Spring, MD 20910, 301-427-7550.

SUPPLEMENTARY INFORMATION: FDA published in the Federal Register of September 11, 1979 (44 FR 52950), a proposed regulation explaining the development of the proposed regulations classifying hematology and pathology devices, the medical device classification procedures, and the activities of the Hematology and Pathology Device Section of the Clinical Chemistry and Hematology Devices Panel (formerly the Hematology Device Classification Panel and the Pathology Device Classification Panel). FDA also published in that issue of the Federal Register (44 FR 52976) a proposed regulation to classify automated blood cell diluting apparatus into class I (general controls). A period of 60 days was provided for interested persons to submit written comments to FDA.

The one comment received on the proposal questioned whether the regulation will provide sufficient distinction between automated and semi-automated blood cell diluting devices.

FDA believes it is unnecessary to write a separate regulation for semi-automated blood cell diluting devices. The proposed regulation was intended to cover both fully automated and semi-automated devices. Therefore, the identification has been modified to clarify that intent.

On April 28, 1978, the agency terminated all of the device classification panels and reestablished them with the same functions, but with new names and with a new structure. FDA published notices of these changes in the Federal Register of May 19, 1978 (43 FR 21666, 21667, and 21668) and May 26, 1978 (43 FR 22672 and 22673). Further information regarding the device advisory committees and a list of their new names may be found in the preamble to the general provisions, published elsewhere in this issue of the Federal Register.

Therefore, under the Federal Food, Drug, and Cosmetic Act (secs. 513, 701(a), 52 Stat. 1055, 90 Stat. 540–546 (21 U.S.C. 360c, 371(a))) and under authority delegated to him (21 CFR 5.1), the Commissioner of Food and Drugs is amending Part 864 in Subpart F by adding new § 864.5240, to read as follows:

§ 864.5240 Automated blood cell diluting apparatus.

(a) *Identification.* An automated blood cell diluting apparatus is a fully automated or semi-automated device used to make appropriate dilutions of a blood sample for further testing.

(b) *Classification.* Class I (general controls).

Effective date. This regulation shall be effective October 14, 1980.

(Secs. 513, 701(a), 52 Stat. 1055, 90 Stat. 540–546 (21 U.S.C. 360c, 371(a)))

Dated: August 15, 1980.

William F. Randolph,

Acting Associate Commissioner for Regulatory Affairs.

[FR Doc. 80-27317 Filed 9-11-80; 8:45 am]

BILLING CODE 4110-03-M

---

21 CFR Part 864

[Docket No. 78N-1854]

Classification of Automated Cell-Locating Devices

AGENCY: Food and Drug Administration.

ACTION: Final rule.

SUMMARY: The Food and Drug Administration (FDA) is issuing a final rule classifying automated cell-locating devices into class II (performance standards). The effect of classifying a device into class II is to provide for the future development of one or more performance standards to assure the safety and effectiveness of the device. This action is being taken under the Medical Device Amendments of 1976.

EFFECTIVE DATE: October 14, 1980.

FOR FURTHER INFORMATION CONTACT: Kaiser Aziz, Bureau of Medical Devices (HFK-440), Food and Drug Administration, 8757 Georgia Ave., Silver Spring, MD 20910, 301-427-7550.

SUPPLEMENTARY INFORMATION: FDA published in the Federal Register of September 11, 1979 (44 FR 52950), a proposed regulation explaining the development of the proposed regulations classifying hematology and pathology devices, the medical device classification procedures, and the activities of the Hematology and Pathology Device Section of the Clinical Chemistry and Hematology Devices Panel (formerly the Hematology Device Classification Panel and the Pathology Device Classification Panel). FDA also published in that issue of the Federal Register (44 FR 52977) a proposed regulation to classify automated cell-locating devices into class II (performance standards). A period of 60 days was provided for interested persons to submit written comments to FDA.

No comments have been received regarding the proposed regulation to classify this device. Accordingly, the proposed regulation is being adopted without change.

On April 28, 1978, the agency terminated all of the device classification panels and reestablished them with the same functions, but with new names and with a new structure. FDA published notices of these changes in the Federal Register of May 19, 1978 (43 FR 21666, 21667, and 21668) and May 26, 1978 (43 FR 22672 and 22673). Further information regarding the device advisory committees and a list of their new names may be found in the preamble to the general provisions, published elsewhere in this issue of the Federal Register.

Therefore, under the Federal Food, Drug, and Cosmetic Act (secs. 513, 701(a), 52 Stat. 1055, 90 Stat. 540–546 (21 U.S.C. 360c, 371(a))) and under authority delegated to him (21 CFR 5.1), the Commissioner of Food and Drugs is amending Part 864 in Subpart F by adding new § 864.5260, to read as follows:

§ 864.5260 Automated cell-locating device.

(a) *Identification.* An automated cell-locating device is a device used to locate blood cells on a peripheral blood smear, allowing the operator to identify and classify each cell according to type. (Peripheral blood is blood circulating in one of the body's extremities, such as the arm.)

(b) *Classification.* Class II (performance standards).

Effective date. This regulation shall be effective October 14, 1980.

(Secs. 513, 701(a), 52 Stat. 1055, 90 Stat. 540–546 (21 U.S.C. 360c, 371(a)))

Dated: August 15, 1980.

William F. Randolph,

Acting Associate Commissioner for Regulatory Affairs.

[FR Doc. 80-27318 Filed 9-11-80; 8:45 am]

BILLING CODE 4110-03-M

---

21 CFR Part 864

[Docket No. 78N-1855]

Classification of Red Cell Indices Devices

AGENCY: Food and Drug Administration.

ACTION: Final rule.

SUMMARY: The Food and Drug Administration (FDA) is issuing a final rule classifying red cell indices devices into class II (performance standards). The effect of classifying a device into class II is to provide for the future development of one or more performance standards to assure the safety and effectiveness of the device. This action is being taken under the Medical Device Amendments of 1976.

EFFECTIVE DATE: October 14, 1980.

FOR FURTHER INFORMATION CONTACT: Kaiser Aziz, Bureau of Medical Devices (HFK-440), Food and Drug Administration, 8757 Georgia Ave., Silver Spring, MD 20910, 301-427-7550.

SUPPLEMENTARY INFORMATION: FDA published in the Federal Register of September 11, 1979 (44 FR 52950), a proposed regulation explaining the development of the proposed regulations classifying hematology and pathology devices, the medical device classification procedures, and the activities of the Hematology and Pathology Device Section of the Clinical Chemistry and Hematology Devices Panel (formerly the Hematology Device Classification Panel and the Pathology Device Classification Panel). FDA also published in that issue of the Federal Register (44 FR 52978) a proposed regulation to classify red cell indices devices into class II (performance standards). A period of 60 days was provided for interested persons to submit written comments to FDA.

The following is a summary of the comments received on the proposal and the agency's response to them:

1. One comment suggested that the identification is not sufficiently clear to differentiate between a slide rule, which is not a medical device, and a red cell indices device.

FDA disagrees with this comment. If a slide rule is marketed with labeling specifying an intended use in the calculation of the red cell indices, then it is included in the generic category of a red cell indices device. FDA notes that certain marketed red cell indices devices are part of, or accessories to, automated cell counters. These devices are microprocessors that perform essentially the same function as the slide rule.

2. One comment concurred with the proposed class II classification but stated that the general controls of class I, including GMP's and the labeling requirements of 21 CFR 809.10 are sufficient to assure the safety and effectiveness of red cell indices devices until the time a standard is promulgated in final form.

FDA partially agrees with this comment. General controls above, including 21 CFR 809.10, are not sufficient to assure the safety and effectiveness of these devices because they do not specify acceptable ranges of precision and accuracy of measured or calculated red cell indices. A performance standard is required in order to specify performance ranges. However, the agency acknowledges that, until a standard is promulgated, these devices will be subject to only the general controls alone including 21 CFR 809.10.

3. One comment agreed with the proposed class II classification and the reasoning offered in support of that classification. Accordingly, the proposed regulation is being adopted without change.

On April 28, 1978, the agency terminated all of the device classification panels and reestablished them with the same functions, but with new names and with a new structure. FDA published notices of these changes in the Federal Register of May 19, 1978 (43 FR 21666, 21667, and 21668) and May 26, 1978 (43 FR 22672 and 22673). Further information regarding the device advisory committees and a list of their new names may be found in the preamble to the general provisions, published elsewhere in this issue of the Federal Register.

Therefore, under the Federal Food, Drug, and Cosmetic Act (secs. 513, 701(a), 52 Stat. 1055, 90 Stat. 540–546 (21 U.S.C. 360c, 371(a))) and under authority delegated to him (21 CFR 5.1), the Commissioner of Food and Drugs is amending Part 864 in Subpart F by adding new § 864.5300, to read as follows:

§ 864.5300 Red cell indices device.

(a) *Identification.* A red cell indices device, usually part of a larger system, calculates or directly measures the erythrocyte mean corpuscular volume (MCV), the mean corpuscular hemoglobin (MCH), and the mean corpuscular hemoglobin concentration (MCHC). The red cell indices are used for the differential diagnosis of anemias.

(b) *Classification.* Class II (performance standards).

Effective date. This regulation shall be effective October 14, 1980.

(Secs. 513, 701(a), 52 Stat. 1055, 90 Stat. 540–546 (21 U.S.C. 360c, 371(a)))

Dated: August 15, 1980.

William F. Randolph,

Acting Associate Commissioner for Regulatory Affairs.

[FR Doc. 80-27319 Filed 9-11-80; 8:45 am]

BILLING CODE 4110-03-M

---

21 CFR Part 864

[Docket No. 78N-1856]

Classification of Microsedimentation Centrifuges

AGENCY: Food and Drug Administration.

ACTION: Final rule.

SUMMARY: The Food and Drug Administration (FDA) is issuing a final rule classifying microsedimentation centrifuges into class I (general controls). The effect of classifying a device into class I is to require that the device meet only the general controls applicable to all devices. This action is being taken under the Medical Device Amendments of 1976.

EFFECTIVE DATE: October 14, 1980.

FOR FURTHER INFORMATION CONTACT: Kaiser Aziz, Bureau of Medical Devices (HFK-440), Food and Drug Administration, 8757 Georgia Ave., Silver Spring, MD 20910, 301-427-7550.

SUPPLEMENTARY INFORMATION: FDA published in the Federal Register of September 11, 1979 (44 FR 52950), a proposed regulation explaining the development of the proposed regulations classifying hematology and pathology devices, the medical device classification procedures, and the activities of the Hematology and Pathology Device Section of the Clinical Chemistry and Hematology Devices Panel (formerly the Hematology Device Classification Panel and the Pathology Device Classification Panel). FDA also published in that issue of the Federal Register (44 FR 52979) a proposed regulation to classify microsedimentation centrifuges into class I (general controls). A period of 60 days was provided for interested persons to submit written comments to FDA.

No comments have been received regarding the proposed regulation to classify this device. Accordingly, the proposed regulation is being adopted without change.

On April 28, 1978, the agency terminated all of the device classification panels and reestablished them with the same functions, but with new names and with a new structure. FDA published notices of these changes in the Federal Register of May 19, 1978 (43 FR 21666, 21667, and 21668) and May 26, 1978 (43 FR 22672 and 22673). Further information regarding the device advisory committees and a list of their new names may be found in the preamble to the general provisions, published elsewhere in this issue of the Federal Register.

Therefore, under the Federal Food, Drug, and Cosmetic Act (secs. 513, 701(a), 52 Stat. 1055, 90 Stat. 540–546 (21 U.S.C. 360c, 371(a))) and under authority delegated to him (21 CFR 5.1), the Commissioner of Food and Drugs is amending Part 864 in Subpart F by adding new § 864.5350, to read as follows:

§ 864.5350 Microsedimentation centrifuge.

(a) *Identification.* A microsedimentation centrifuge is a device used to sediment red cells for the microsedimentation rate test.

(b) *Classification.* Class I (general controls).

Effective date. This regulation shall be effective October 14, 1980.

(Secs. 513, 701(a), 52 Stat. 1055, 90 Stat. 540–546 (21 U.S.C. 360c, 371(a)))

Dated: August 15, 1980.

William F. Randolph,

Acting Associate Commissioner for Regulatory Affairs.

[FR Doc. 80-27320 Filed 9-11-80; 8:45 am]

BILLING CODE 4110-03-M

---

21 CFR Part 864

[Docket No. 78N-1857]

Classification of Coagulation Instruments

AGENCY: Food and Drug Administration.

ACTION: Final rule.

SUMMARY: The Food and Drug Administration (FDA) is issuing a final rule classifying coagulation instruments into class II (performance standards). The effect of classifying a device into class II is to provide for the future development of one or more performance standards to assure the safety and effectiveness of the device. This action is being taken under the Medical Device Amendments of 1976.

EFFECTIVE DATE: October 14, 1980.

FOR FURTHER INFORMATION CONTACT: Kaiser Aziz, Bureau of Medical Devices (HFK-440), Food and Drug Administration, 8757 Georgia Ave., Silver Spring, MD 20910, 301-427-7550.

SUPPLEMENTARY INFORMATION: FDA published in the Federal Register of September 11, 1979 (44 FR 52950), a proposed regulation explaining the development of the proposed regulations classifying hematology and pathology devices, the medical device classification procedures, and the activities of the Hematology and Pathology Device Section of the Clinical Chemistry and Hematology Devices Panel (formerly the Hematology Device Classification Panel and the Pathology Device Classification Panel). FDA also published in that issue of the Federal Register (44 FR 52980) a proposed regulation to classify coagulation instruments into class II (performance standards). A period of 60 days was provided for interested persons to submit written comments to FDA.

No comments have been received regarding the proposed regulation to classify this device. Accordingly, the proposed regulation is being adopted without change.

On April 28, 1978, the agency terminated all of the device classification panels and reestablished them with the same functions, but with new names and with a new structure. FDA published notices of these changes in the Federal Register of May 19, 1978 (43 FR 21666, 21667, and 21668) and May 26, 1978 (43 FR 22672 and 22673). Further information regarding the device advisory committees and a list of their new names may be found in the preamble to the general provisions, published elsewhere in this issue of the Federal Register.

Therefore, under the Federal Food, Drug, and Cosmetic Act (secs. 513, 701(a), 52 Stat. 1055, 90 Stat. 540–546 (21 U.S.C. 360c, 371(a))) and under authority delegated to him (21 CFR 5.1), the Commissioner of Food and Drugs is amending Part 864 in Subpart F by adding new § 864.5400, to read as follows:

§ 864.5400 Coagulation instrument.

(a) *Identification.* A coagulation instrument is an automated or semiautomated device used to determine the onset of clot formation for in vitro coagulation studies.

(b) *Classification.* Class II (performance standards).

Effective date. This regulation shall be effective October 14, 1980.

(Secs. 513, 701(a), 52 Stat. 1055, 90 Stat. 540–546 (21 U.S.C. 360c, 371(a)))

Dated: August 15, 1980.

William F. Randolph,

Acting Associate Commissioner for Regulatory Affairs.

[FR Doc. 80-27321 Filed 9-11-80; 8:45 am]

BILLING CODE 4110-03-M

---

21 CFR Part 865

[Docket No. 78N-1858]

Classification of Multipurpose Systems for In Vitro Coagulation Studies

AGENCY: Food and Drug Administration.

ACTION: Final rule.

SUMMARY: The Food and Drug Administration (FDA) is issuing a final rule classifying multipurpose systems for in vitro coagulation studies into class II (performance standards). The effect of classifying a device into class II is to provide for the future development of one or more performance standards to assure the safety and effectiveness of the device. This action is being taken under the Medical Device Amendments of 1976.

EFFECTIVE DATE: October 14, 1980.

FOR FURTHER INFORMATION CONTACT: Kaiser Aziz, Bureau of Medical Devices (HFK-440), Food and Drug Administration, 8757 Georgia Ave., Silver Spring, MD 20910, 301-427-7550.

SUPPLEMENTARY INFORMATION: FDA published in the Federal Register of September 11, 1979 (44 FR 52950), a proposed regulation explaining the

development of the proposed regulations classifying hematology and pathology devices, the medical device classification procedures, and the activities of the Hematology and Pathology Device Section of the Clinical Chemistry and Hematology Devices Panel (formerly the Hematology Device Classification Panel and the Pathology Device Classification Panel). FDA also published in that issue of the Federal Register (44 FR 52981) a proposed regulation to classify multipurpose systems for in vitro coagulation studies into class II (performance standards). A period of 60 days was provided for interested persons to submit written comments to FDA.

No comments have been received regarding the proposed regulation to classify this device. Accordingly, the proposed regulation is being adopted without change.

On April 28, 1978, the agency terminated all of the device classification panels and reestablished them with the same functions, but with new names and with a new structure. FDA published notices of these changes in the Federal Register of May 19, 1978 (43 FR 21666, 21667, and 21668) and May 26, 1978 (43 FR 22672 and 22673). Further information regarding the device advisory committees and a list of their new names may be found in the preamble to the general provisions, published elsewhere in this issue of the Federal Register.

Therefore, under the Federal Food, Drug, and Cosmetic Act (secs. 513, 701(a), 52 Stat. 1055, 90 Stat. 540–546 (21 U.S.C. 360c, 371(a))) and under authority delegated to him (21 CFR 5.1), the Commissioner of Food and Drugs is amending Part 864 in Subpart F by adding new § 864.5425, to read as follows:

§ 864.5425 Multipurpose system for in vitro coagulation studies.

(a) *Identification.* A multipurpose system for in vitro coagulation studies is a device consisting of one automated or semiautomated instrument and its associated reagents and controls. The system is used to perform a series of coagulation studies and coagulation factor assays.

(b) *Classification.* Class II (performance standards).

Effective date. This regulation shall be effective October 14, 1980.

(Secs. 513, 701(a), 52 Stat. 1055, 90 Stat. 540–546 (21 U.S.C. 360c, 371(a)))

Dated: August 15, 1980.

William F. Randolph,

Acting Associate Commissioner for Regulatory Affairs.

[FR Doc. 80-2[illegible]322 Filed 9-11-80; 8:45 am]

BILLING CODE 4110-03-M

---

21 CFR Part 864

[Docket No. 78N-1859]

Classification of Automated Hematocrit Instruments

AGENCY: Food and Drug Administration.

ACTION: Final rule.

SUMMARY: The Food and Drug Administration (FDA) is issuing a final rule classifying automated hematocrit instruments into class II (performance standards). The effect of classifying a device into class II is to provide for the future development of one or more performance standards to assure the safety and effectiveness of the device. This action is being taken under the Medical Device Amendments of 1976.

EFFECTIVE DATE: October 14, 1980.

FOR FURTHER INFORMATION CONTACT: Kaiser Aziz, Bureau of Medical Devices (HFK-440), Food and Drug Administration, 8757 Georgia Ave., Silver Spring, MD 20910, 301-427-7550.

SUPPLEMENTARY INFORMATION: FDA published in the Federal Register of September 11, 1979 (44 FR 52950), a proposed regulation explaining the development of the proposed regulations classifying hematology and pathology devices, the medical device classification procedures, and the activities of the Hematology and Pathology Device Section of the Clinical Chemistry and Hematology Device Panel (formerly the Hematology Device Classification Panel and the Pathology Device Classification Panel). FDA also published in that issue of the Federal Register (44 FR 52982) a proposed regulation to classify automated hematocrit instruments into class II (performance standards). A period of 60 days was provided for interested persons to submit written comments to FDA.

The following is a summary of the comments received on the proposal and the agency's response to them:

1. One comment suggested that the identification is not sufficiently specific to distinguish this device from semi-automated hematocrit instruments when such classification regulations are proposed.

FDA agrees with this comment. FDA intended that this regulation apply to both fully automated and semi-automated hematocrit instruments. Therefore, the identification has been modified to reflect that intent.

2. One comment concurred with the proposed class II classification but suggested that FDA and the Panel had not demonstrated that product labeling requirements are not sufficient to protect the public health. The comment also suggested that the Panel did not identify any risks to health which would require the use of standards to control these devices. The comment recommended that the class I requirements, including product labeling required by 21 CFR 809.10 and GMP's, are sufficient to adequately control these devices until such time as a standard is promulgated in final form.

FDA disagrees with this comment. FDA and the Panel have demonstrated that a performance standard is necessary to specify acceptable ranges for the precision and accuracy of the hematocrit measurements. Labeling required by 21 CFR 809.10 includes a statement of the performance characteristics obtainable with the device and the relationship of those characteristics to a generally accepted methodology. Specification of acceptable ranges verified by reference methods will be addressed in standards. The risk of misdiagnosis of any of the hematology disorders cited by the Panel, and subsequent inappropriate therapy, justify placing these devices into class II. However, FDA acknowledges that until a standard is promulgated in final form, these devices will be subject only to general controls and 21 CFR 809.10 and GMP's.

3. One comment suggested that the proposed regulation does not distinguish between automated hematocrit devices that are part of a larger system and those that are independent devices.

FDA agrees with this comment. This regulation was intended to apply both to automated hematocrit instruments that are part of a larger system and to those that are independent devices. Therefore, the identification has been modified to reflect that intent.

4. One comment stated that any proposal for a standard applicable to a hematocrit device that is part of a larger system must consider the operational and functional characteristics of the larger system to make sure that compliance with the hematocrit standard would not affect adversely the larger system, from a technological or an economic point of view.

FDA believes that the development of a standard for an automated hematocrit instrument that is part of a larger system will involve careful consideration of the

effect of that standard on the larger system.

5. FDA received on comment in support of the proposed class II classification and the reasoning offered in support of that classification. Accordingly, the proposed regulation is being adopted with the noted changes.

On April 28, 1978, the agency terminated all of the device classification panels and reestablished them with the same functions, but with new names and with a new structure. FDA published notices of these changes in the Federal Register of May 19, 1978 (43 FR 21666, 21667, and 21668) and May 26, 1978 (43 FR 22672 and 22673). Further information regarding the device advisory committees and a list of their new names may be found in the preamble to the general provisions, published elsewhere in this issue of the Federal Register.

Therefore, under the Federal Food, Drug, and Cosmetic Act (secs. 513, 701(a), 52 Stat. 1055, 90 Stat. 540–546 (21 U.S.C. 360c, 371(a))) and under authority delegated to him (21 CFR 5.1), the Commissioner of Food and Drugs is amending Part 864 in Subpart F by adding new § 864.5600, to read as follows:

§ 864.5600 Automated hematocrit instrument.

(a) *Identification.* An automated hematocrit instrument is a fully automated or semi-automated device which may or may not be part of a larger system. This device measures the packed red cell volume of a blood sample to distinguish normal from abnormal states, such as anemia and erythrocytosis (an increase in the number of red cells).

(b) *Classification.* Class II (performance standards).

Effective date. This regulation shall be effective October 14, 1980.

(Secs. 513, 701(a), 52 Stat. 1055, 90 Stat. 540–546 (21 U.S.C. 360c, 371(a)))

Dated: August 15, 1980.

William F. Randolph,

Acting Associate Commissioner for Regulatory Affairs.

[FR Doc. 80-27323 Filed 9-11-80; 8:45 am]

BILLING CODE 4110-03-M

---

21 CFR Part 864

[Docket No. 78N-1860]

Classification of Automated Hemoglobin Systems

AGENCY: Food and Drug Administration.

ACTION: Final rule.

SUMMARY: The Food and Drug Administration (FDA) is issuing a final rule classifying automated hemoglobin systems into class II (performance standards). The effect of classifying a device into class II is to provide for the future development of one or more performance standards to assure the safety and effectiveness of the device. This action is being taken under the Medical Device Amendments of 1976.

EFFECTIVE DATE: October 14, 1980.

FOR FURTHER INFORMATION CONTACT: Kaiser Aziz, Bureau of Medical Devices (HFK-440), Food and Drug Administration, 8757 Georgia Ave., Silver Spring, MD 20910, 301-427-7550.

SUPPLEMENTARY INFORMATION: FDA published in the Federal Register of September 11, 1979 (44 FR 52950), a proposed regulation explaining the development of the proposed regulations classifying hematology or pathology devices, the medical device classification procedures, and the activities of the Hematology and Pathology Device Section of the Clinical Chemistry and Hematology Devices Panel (formerly the Hematology Device Classification Panel and the Pathology Device Classification Panel). FDA also published in that issue of the Federal Register (44 FR 52983) a proposed regulation to classify automated hemoglobin systems into class II (performance standards). A period of 60 days was provided for interested persons to submit written comments to FDA.

The following is a summary of the comments received on the proposal and the agency's response to them:

1. One comment suggested that the identification will not distinguish this device from semi-automated hemoglobin systems when a regulation classifying these devices is proposed.

FDA believes it is unnecessary to write a separate regulation for semi-automated hemoglobin systems. The proposed regulation was intended to apply both to fully automated and to semi-automated systems. Therefore, the identification has been modified to reflect this intent.

2. One comment suggested that the identification does not distinguish automated hemoglobin systems which are independent devices from automated systems which are part of a larger system.

FDA agrees with this comment. The proposed regulation was intended to apply to both independent devices and devices that are part of a larger system. Therefore, the identification has been modified to reflect this intent.

3. One comment suggested that the proposed regulation would encompass all the devices described in the regulation classifying whole blood hemoglobin assays (44 FR 53019).

FDA intended that the regulation classifying whole blood hemoglobin assays apply to manual techniques only. The identification of that regulation, Docket Number 78N-1896, has been modified to reflect that intent.

4. One comment agreed with the proposed classification but stated that the Panel had not presented sufficient justification for its class II recommendation. The comment noted that the risks identified are not unique to the hemoglobin method and that the electrical shock hazard is not appropriate. The comment stated that products using the cyanmethemoglobin method have been marketed for years and the existence of an ICSH standard or preliminary CDC standard does not meet the statutory requirements for placing a device into class II. The comment suggested that automated hemoglobin systems can be adequately controlled through the use of general controls, including GMP's and product labeling requirements in 21 CFR 809.10, until such time as a standard is promulgated in final form.

FDA disagrees with this comment. FDA believes that the proposed regulation and the Panel's recommendation clearly justify classifying automated hemoglobin systems into class II. The risk of misdiagnosis of a hemoglobin disorder is certainly unique to a hemoglobin measuring system. The potential for electrical shock exists with any electrically powered device. Patient harm resulting from misdiagnosis and subsequent inappropriate therapy would justify classification into class III were it not for the years of experience with the cyanmethemoglobin methodology and the existence of the ICSH and CDC standards, which clearly indicate that a performance standard can be established. General controls alone cannot provide reasonable assurance of the safety and effectiveness of these devices. General controls do not specify acceptable ranges for the accuracy, precision, sensitivity, and specificity of hemoglobin measurements made with these systems and a performance standard is required. FDA acknowledges, however, that until a standard is promulgated, these device systems will be subject only to the general controls of class I, including labeling requirements of 21 CFR 809.10.

5. One comment suggested that the controls applied to hemoglobin devices that are part of a larger system must not

have deleterious financial or technological effects on the other components of the larger system.

FDA agrees that the impact of a hemoglobin performance standard on a larger system should receive careful consideration during the standards development process.

6. One comment suggested that it would be more appropriate to classify the device into class I than the proposed class II due to the slight risk to the patient. The accuracy and precision of the system are specified and the user may determine if the device is appropriate for the intended use. A minor error would not result in a radical change in patient treatment, and a major error would be readily detected by the user. The device has no physical contact with the patient and, therefore, cannot cause immediate harm to the patient. A performance standard would not improve the safety or effectiveness of the device and therefore is an inappropriate form of regulation.

FDA disagrees with this comment. The risk of misdiagnosis of a hemoglobin disorder resulting from inaccurate data generated by an automated hemoglobin system is not a slight risk. In many instances, the physician who relies upon the hemoglobin measurement has no direct contact with the laboratory in which the measurement is made. Therefore, the physician has no idea of the accuracy or precision of the instrument used and may not be able to detect an error or determine its degree. Therefore, a performance standard that specifies acceptable ranges of precision, accuracy, sensitivity, and specificity is essential and will improve the safety and effectiveness of the device.

7. FDA received one comment fully supporting the Panel's recommendation and the reasoning upon which it was based.

Accordingly, the proposed regulation is being adopted with these changes.

On April 28, 1978, the agency terminated all of the device classification panels and reestablished them with the same functions, but with new names and with a new structure. FDA published notices of these changes in the Federal Register of May 19, 1978 (43 FR 21666, 21667, and 21668) and May 26, 1978 (43 FR 22672 and 22673). Further information regarding the device advisory committees and a list of their new names may be found in the preamble to the general provisions, published elsewhere in this issue of the Federal Register.

Therefore, under the Federal Food, Drug, and Cosmetic Act (secs. 513, 701(a), 52 Stat. 1055, 90 Stat. 540–546 (21 U.S.C. 360c, 371(a))) and under authority delegated to him (21 CFR 5.1), the Commissioner of Food and Drugs is amending Part 864 in Subpart F by adding new § 864.5620, to read as follows:

§ 864.5620 Automated hemoglobin system.

(a) *Identification.* An automated hemoglobin system is a fully automated or semi-automated device which may or may not be part of a larger system. The generic type of device consists of the reagents, calibrators, controls, and instrumentation used to determine the hemoglobin content of human blood.

(b) *Classification.* Class II (performance standards).

Effective date. This regulation shall be effective October 14, 1980.

(Secs. 513, 701(a), 52 Stat. 1055, 90 Stat. 540–546 (21 U.S.C. 360c, 371(a)))

Dated: August 15, 1980.

William F. Randolph,

Acting Associate Commissioner for Regulatory Affairs.

[FR Doc. 80-27324 Filed 9-11-80; 8:45 am]

BILLING CODE 4110-03-M

---

21 CFR Part 864

[Docket No. 78N-1861]

Classification of Automated Heparin Analyzers

AGENCY: Food and Drug Administration.

ACTION: Final rule.

SUMMARY: The Food and Drug Administration (FDA) is issuing a final rule classifying automated heparin analyzers into class III (premarket approval). The effect of classifying a device into class III is to require each manufacturer of the device to submit to FDA a premarket approval application that includes information concerning safety and effectiveness tests for the device. Each premarket approval application must be submitted to FDA on or before April 29, 1983, or 90 days after promulgation of a separate regulation requiring premarket approval of the device, whichever occurs later. This action is being taken under the Medical Device Amendments of 1976.

EFFECTIVE DATE: October 14, 1980.

FOR FURTHER INFORMATION CONTACT: Kaiser Aziz, Bureau of Medical Devices (HFK-440), Food and Drug Administration, 8757 Georgia Ave., Silver Spring, MD 20910, 301-427-7550.

SUPPLEMENTARY INFORMATION: FDA published in the Federal Register of September 11, 1979 (44 FR 52950), a proposed regulation explaining the development of the proposed regulations classifying hematology and pathology devices, the medical device classification procedures, and the activities of the Hematology and Pathology Device Section of the Clinical Chemistry and Hematology Devices Panel (formerly the Hematology Device Classification Panel and the Pathology Device Classification Panel). FDA also published in that issue of the Federal Register (44 FR 52984) a proposed regulation to classify automated heparin analyzers into class III (premarket approval). A period of 60 days was provided for interested persons to submit written comments to FDA.

No comments have been received regarding the proposed regulation to classify this device. Accordingly, the proposed regulation is being adopted without change.

On April 28, 1978, the agency terminated all of the device classification panels and reestablished them with the same functions, but with new names and with a new structure. FDA published notices of these changes in the Federal Register of May 19, 1978 (43 FR 21666, 21667, and 21668) and May 26, 1978 (43 FR 22672 and 22673). Further information regarding the device advisory committees and a list of their new names may be found in the preamble to the general provisions, published elsewhere in this issue of the Federal Register.

Therefore, under the Federal Food, Drug, and Cosmetic Act (secs. 513, 701(a), 52 Stat. 1055, 90 Stat. 540–546 (21 U.S.C. 360c, 371(a))) and under authority delegated to him (21 CFR 5.1), the Commissioner of Food and Drugs is amending Part 864 in Subpart F by adding new § 864.5680, to read as follows:

§ 864.5680 Automated heparin analyzer.

(a) *Identification.* An automated heparin analyzer is a device used to determine the heparin level in a blood sample by mixing the sample with protamine (a heparin-neutralizing substance) and determining photometrically the onset of air-activated clotting. The analyzer also determines the amount of protamine necessary to neutralize the heparin in the patient's circulation.

(b) *Classification.* Class III (premarket approval).

Effective date. This regulation shall be effective October 14, 1980.

(Secs. 513, 701(a), 52 Stat. 1055, 90 Stat. 540–546 (21 U.S.C. 360c, 371(a)))

Dated: August 15, 1980.

William F. Randolph,

Acting Associate Commissioner for Regulatory Affairs.

[FR Doc. 80-27325 Filed 9-11-80; 8:45 am]

BILLING CODE 4110-03-M

---

21 CFR Part 864

[Docket No. 78N-1862]

Classification of Automated Platelet Aggregation Systems

AGENCY: Food and Drug Administration.

ACTION: Final rule.

SUMMARY: The Food and Drug Administration (FDA) is issuing a final rule classifying automated platelet aggregation systems into class II (performance standards). The effect of classifying a device into class II is to provide for the future development of one or more performance standards to assure the safety and effectiveness of the device. This action is being taken under the Medical Device Amendments of 1976.

EFFECTIVE DATE: October 14, 1980.

FOR FURTHER INFORMATION CONTACT: Kaiser Aziz, Bureau of Medical Devices (HFK-440), Food and Drug Administration, 8757 Georgia Ave., Silver Spring, MD 20910, 301-427-7550.

SUPPLEMENTARY INFORMATION: FDA published in the Federal Register of September 11, 1979 (44 FR 52950), a proposed regulation explaining the development of the proposed regulations classifying hematology and pathology devices, the medical device classification procedures, and the activities of the Hematology and Pathology Device Section of the Clinical Chemistry and Hematology Device Panel (formerly the Hematology Device Classification Panel and the Pathology Device Classification Panel). FDA also published in that issue of the Federal Register (44 FR 52985) a proposed regulation to classify automated platelet aggregation systems into class II (performance standards). A period of 60 days was provided for intersted persons to submit written comments to FDA.

No comments have been received regarding the proposed regulation to classify this device. Accordingly, the proposed regulation is being adopted without change.

On April 28, 1978, the agency terminated all of the device classification panels and reestablished them with the same functions, but with new names and with a new structure. FDA published notices of these changes in the Federal Register of May 19, 1978 (43 FR 21666, 21667, and 21668) and May 26, 1978 (43 FR 22672 and 22673). Further information regarding the device advisory committees and a list of their new names may be found in the preamble to the general provisions, published elsewhere in this issue of the Federal Register.

Therefore, under the Federal Food, Drug, and Cosmetic Act (secs. 513, 701(a), 52 Stat. 1055, 90 Stat. 540-546 (21 U.S.C. 360c, 371(a))) and under authority delegated to him (21 CFR 5.1), the Commissioner of Food and Drugs is amending Part 864 in Subpart F by adding new § 864.5700, to read as follows:

§ 864.5700 Automated platelet aggregation system.

(a) *Identification.* An automated platelet aggregation system is a device used to determine changes in platelet shape and platelet aggregation following the addition of an aggregating reagent to a platelet-rich plasma.

(b) *Classification.* Class II (performance standards).

Effective date. This regulation shall be effective October 14, 1980.

(Secs. 513, 701(a), 52 Stat. 1055, 90 Stat. 540-546 (21 U.S.C. 360c, 371(a)))

Dated: August 15, 1980.

William F. Randolph,

Acting Associate Commissioner for Regulatory Affairs.

[FR Doc. 80-27326 Filed 9-11-80; 8:45 am]

BILLING CODE 4110-03-M

---

21 CFR Part 864

[Docket No. 78N-1863]

Classification of Automated Sedimentation Rate Devices

AGENCY: Food and Drug Administration.

ACTION: Final rule.

SUMMARY: The Food and Drug Administration (FDA) is issuing a final rule classifying automated sedimentation rate devices into class I (general controls). The effect of classifying a device into class I is to require that the device meet only the general controls applicable to all devices. This action is being taken under the Medical Device Amendments of 1976.

EFFECTIVE DATE: October 14, 1980.

FOR FURTHER INFORMATION CONTACT: Kaiser Aziz, Bureau of Medical Devices (HFK-440), Food and Drug Administration, 8757 Georgia Ave., Silver Spring, MD 20910, 301-427-7550.

SUPPLEMENTARY INFORMATION: FDA published in the Federal Register of September 11, 1979 (44 FR 52950), a proposed regulation explaining the development of the proposed regulations classifying hematology and pathology devices, the medical device classification procedures, and the activities of the Hematology and Pathology Device Section of the Clinical Chemistry and Hematology Devices Panel (formerly the Hematology Device Classification Panel and the Pathology Device Classification Panel). FDA also published in that issue of the Federal Register (44 FR 52986) a proposed regulation to classify automated sedimentation rate devices into class I (general controls). A period of 60 days was provided for interested persons to submit written comments to FDA.

No comments have been received regarding the proposed regulation to classify this device. Accordingly, the proposed regulation is being adopted without change.

On April 28, 1978, the agency terminated all of the device classification panels and reestablished them with the same functions, but with new names and with a new structure. FDA published notices of these changes in the Federal Register of May 19, 1978 (43 FR 21666, 21667, and 21668) and May 26, 1978 (43 FR 22672 and 22673). Further information regarding the device advisory committees and a list of their new names may be found in the preamble to the general provisions, published elsewhere in this issue of the Federal Register.

Therefore, under the Federal Food, Drug, and Cosmetic Act (secs. 513, 701(a), 52 Stat. 1055, 90 Stat. 540-546 (21 U.S.C. 360c, 371(a))) and under authority delegated to him (21 CFR 5.1), the Commissioner of Food and Drugs is amending Part 864 in Subpart F by adding new § 864.5800, to read as follows:

§ 864.5800 Automated sedimentation rate device.

(a) *Identification.* An automated sedimentation rate device is an instrument that measures automatically the erythrocyte sedimentation rate in whole blood. Because an increased sedimentation rate indicates tissue damage or inflammation, the erythrocyte sedimentation rate device is useful in monitoring treatment of a disease.

(b) *Classification.* Class I (general controls).

Effective date. This regulation shall be effective October 14, 1980.

(Secs. 513, 701(a), 52 Stat. 1055, 90 Stat. 540-546 (21 U.S.C. 360c, 371(a)))

Dated: August 15, 1980.

William F. Randolph,

Acting Associate Commissioner for Regulatory Affairs.

[FR Doc. 80-27327 Filed 9-11-80; 8:45 am]

BILLING CODE 4110-03-M

---

21 CFR Part 864

[Docket No. 78N-1864]

Cassification of Automated Slide Spinners

AGENCY: Food and Drug Administration.

ACTION: Final rule.

SUMMARY: The Food and Drug Administration (FDA) is issuing a final rule classifying automated slide spinners into class I (general controls). The effect of classifying a device into class I is to require that the device meet only the general controls applicable to all devices. This action is being taken under the Medical Device Amendments of 1976.

EFFECTIVE DATE: October 14, 1980.

FOR FURTHER INFORMATION CONTACT: Kaiser Aziz, Bureau of Medical Devices (HFK-440), Food and Drug Administration, 8757 Georgia Ave., Silver Spring, MD 20910, 301-427-7550.

SUPPLEMENTARY INFORMATION: FDA published in the Federal Register of September 11, 1979 (44 FR 52950), a proposed regulation explaining the development of the proposed regulations classifying hematology and pathology devices, the medical device classification procedures, and the activities of the Hematology and Pathology Device Section of the Clinical Chemistry and Hematology Devices Panel (formerly the Hematology Device Classification Panel and the Pathology Device Classification Panel). FDA also published in that issue of the Federal Register (44 FR 52987) a proposed regulation to classify automated slide spinners into class I (general controls). A period of 60 days was provided for interested persons to submit written comments to FDA.

No comments have been received regarding the proposed regulation to classify this device. Accordingly, the proposed regulation is being adopted without change.

On April 28, 1978, the agency terminated all of the device classification panels and reestablished them with the same functions, but with new names and with a new structure. FDA published notices of these changes in the Federal Register of May 19, 1978 (43 FR 21666, 21667, and 21668) and May 26, 1978 (43 FR 22672 and 22673). Further information regarding the device advisory committees and a list of their new names may be found in the preamble to the general provisions, published elsewhere in this issue of the Federal Register.

Therefore, under the Federal Food, Drug, and Cosmetic Act (secs. 513, 701(a), 52 Stat. 1055, 90 Stat. 540-546 (21 U.S.C. 360c, 371(a))) and under authority delegated to him (21 CFR 5.1), the Commissioner of Food and Drugs is amending Part 864 in Subpart F by adding new § 864.5850, to read as follows:

§ 864.5850 Automated slide spinner.

(a) *Identification.* An automated slide spinner is a device that prepares automatically a blood film on a microscope slide using a small amount of peripheral blood (blood circulating in one of the body's extremities, such as the arm).

(b) *Classification.* Class I (general controls).

Effective date. This regulation shall be effective October 14, 1980.

(Secs. 513, 701(a), 52 Stat. 1055, 90 Stat. 540-546 (21 U.S.C. 360c, 371(a)))

Dated: August 15, 1980.

William F. Randolph,

Acting Associate Commissioner for Regulatory Affairs.

[FR Doc. 80-27336 Filed 9-11-80; 8:45 am]

BILLING CODE 4110-08-M

---

21 CFR Part 864

[Docket No. 78N-1865]

Classification of Blood Volume Measuring Devices

AGENCY: Food and Drug Administration.

ACTION: Final rule.

SUMMARY: The Food and Drug Administration (FDA) is issuing a final rule classifying blood volume measuring devices into class II (performance standards). The effect of classifying a device into class II is to provide for the future development of one or more performance standards to assure the safety and effectiveness of the device. This action is being taken under the Medical Device Amendments of 1976.

EFFECTIVE DATE: October 14, 1980.

FOR FURTHER INFORMATION CONTACT: Kaiser Aziz, Bureau of Medical Devices (HFK-440), Food and Drug Administration, 8757 Georgia Ave., Silver Spring, MD 20910, 301-427-7550.

SUPPLEMENTARY INFORMATION: FDA published in the Federal Register of September 11, 1979 (44 FR 52950), a proposed regulation explaining the development of the proposed regulations classifying hematology and pathology devices, the medical device classification procedures, and the activities of the Hematology and Pathology Device Section of the Clinical Chemistry and Hematology Devices Panel (formerly the Hematology Device Classification Panel and the Pathology Device Classification Panel). FDA also published in that issue of the Federal Register (44 FR 52988) a proposed regulation to classify blood volume measuring devices into class II (performance standards). A period of 60 days was provided for interested persons to submit written comments to FDA.

No comments have been received regarding the proposed regulation to classify this device. Accordingly, the proposed regulation is being adopted without change.

On April 28, 1978, the agency terminated all of the device classification panels and reestablished them with the same functions, but with new names and with a new structure. FDA published notices of these changes in the Federal Register of May 19, 1978 (43 FR 21666, 21667, and 21668) and May 26, 1978 (43 FR 22672 and 22673). Further information regarding the device advisory committees and a list of their new names may be found in the preamble to the general provisions, published elsewhere in this issue of the Federal Register.

Therefore, under the Federal Food, Drug, and Cosmetic Act (secs. 513, 701(a), 52 Stat. 1055, 90 Stat. 540-546 (21 U.S.C. 360c, 371(a))) and under authority delegated to him (21 CFR 5.1), the Commissioner of Food and Drugs is amending Part 864 in Subpart F by adding new § 864.5950, to read as follows:

§ 864.5950 Blood volume measuring device.

(a) *Identification.* A blood volume measuring device is a manual, semiautomated, or automated system that is used to calculate the red cell mass, plasma volume, and total blood volume.

(b) *Classification.* Class II (performance standards).

Effective date: This regulation shall be effective October 14, 1980.

(Secs. 513, 701(a), 52 Stat. 1055, 90 Stat. 540-546 (21 U.S.C. 360c, 371(a)))

Dated: August 15, 1980.

William F. Randolph,

Acting Associate Commissioner for Regulatory Affairs.

[FR Doc. 80-27329 Filed 9-11-80; 8:45 am]

BILLING CODE 4110-03-M

12 CFR Part 864

[Docket No. 78N-1866]

Classification of Bleeding Time Devices

AGENCY: Food and Drug Administration.

ACTION: Final rule.

SUMMARY: The Food and Drug Administration (FDA) is issuing a final rule classifying bleeding time devices into class II (performance standards). The effect of classifying a device into class II is to provide for the future development of one or more performance standards to assure the safety and effectiveness of the device. This action is being taken under the Medical Device Amendments of 1976.

EFFECTIVE DATE: October 14, 1980.

FOR FURTHER INFORMATION CONTACT: Kaiser Aziz, Bureau of Medical Devices (HFK-440), Food and Drug Administration, 8757 Georgia Ave., Silver Spring, MD 20910, 301-427-7550.

SUPPLEMENTARY INFORMATION: FDA published in the Federal Register of September 11, 1979 (44 FR 52950), a proposed regulation explaining the development of the proposed regulations classifying hematology and pathology devices, the medical device classification procedures, and the activities of the Hematology and Pathology Device Section of the Clinical Chemistry and Hematology Devices Panel (formerly the Hematology Device Classification Panel and the Pathology Device Classification Panel). FDA also published in that issue of the Federal Register (44 FR 52989) a proposed regulation to classify bleeding time devices into class II (performance standards). A period of 60 days was provided for interested persons to submit written comments to FDA.

No comments have been received regarding the proposed regulation to classify this device. Accordingly, the proposed regulation is being adopted without change.

On April 28, 1978, the agency terminated all of the device classification panels and reestablished them with the same functions, but with new names and with a new structure. FDA published notices of these changes in the Federal Register of May 19, 1978 (43 FR 21666, 21667, and 21668) and May 26, 1978 (43 FR 22672 and 22673). Further information regarding the device advisory committees and a list of their new names may be found in the preamble to the general provisions, published elsewhere in this issue of the Federal Register.

Therefore, under the Federal Food, Drug, and Cosmetic Act (secs. 513, 701(a), 52 Stat. 1055, 90 Stat. 540-546 (21 U.S.C. 360c, 371(a))) and under authority delegated to him (21 CFR 5.1), the Commissioner of Food and Drugs is amending Part 864 in Subpart G by adding new § 864.6100, to read as follows:

Subpart G—Manual Hematology Devices

§ 864.6100 Bleeding time device.

(a) *Identification.* A bleeding time device is a device, usually employing two spring-loaded blades, that produces two small incisions in the patient's skin. The length of time required for the bleeding to stop is a measure of the effectiveness of the coagulation system, primarily the platelets.

(b) *Classification.* Class II (performance standards).

Effective date. This regulation shall be effective October 14, 1980.

(Secs. 513, 701(a), 52 Stat. 1055, 90 Stat. 540-546 (21 U.S.C. 360c, 371(a)))

Dated: August 15, 1980.

William F. Randolph,

Acting Associate Commissioner for Regulatory Affairs.

[FR Doc. 80-27330 Filed 9-11-80; 8:45 am]

BILLING CODE 4110-03-M

21 CFR Part 864

[Docket No. 78N-1867]

Classification of Capillary Blood Collection Tubes

AGENCY: Food and Drug Administration.

ACTION: Final rule.

SUMMARY: The Food and Drug Administration (FDA) is issuing a final rule classifying capillary blood collection tubes into class I (general controls). The effect of classifying a device into class I is to require that the device meet only the general controls applicable to all devices. This action is being taken under the Medical Device Amendments of 1976.

EFFECTIVE DATE: October 14, 1980.

FOR FURTHER INFORMATION CONTACT: Kaiser Aziz, Bureau of Medical Devices (HFK-440), Food and Drug Administration, 8757 Georgia Ave., Silver Spring, MD 20910, 301-427-7550.

SUPPLEMENTARY INFORMATION: FDA published in the Federal Register of September 11, 1979 (44 FR 52950), a proposed regulation explaining the development of the proposed regulations classifying hematology and pathology devices, the medical device classification procedures, and the activities of the Hematology and Pathology Device Section of the Clinical Chemistry and Hematology Devices Panel (formerly the Hematology Device Classification Panel and the Pathology Device Classification Panel). FDA also published in that issue of the Federal Register (44 FR 52990) a proposed regulation to classify capillary blood collection tubes into class I (general controls). A period of 60 days was provided for interested persons to submit written comments to FDA.

No comments have been received regarding the proposed regulation to classify this device. Accordingly, the proposed regulation is being adopted without change.

On April 28, 1978, the agency terminated all of the device classification panels and reestablished them with the same functions, but with new names and with a new structure. FDA published notices of these changes in the Federal Register of May 19, 1978 (43 FR 21666, 21667, and 21668) and May 26, 1978 (43 FR 22672 and 22673). Further information regarding the device advisory committees and a list of their new names may be found in the preamble to the general provisions, published elsewhere in this issue of the Federal Register.

Therefore, under the Federal Food, Drug, and Cosmetic Act (secs. 513, 701(a), 52 Stat. 1055, 90 Stat. 540-546 (21 U.S.C. 360c, 371(a))) and under authority delegated to him (21 CFR 5.1), the Commissioner of Food and Drugs is amending Part 864 in Subpart G by adding new § 864.6150, to read as follows:

§ 864.6150 Capillary blood collection tube.

(a) *Identification.* A capillary blood collection tube is a plain or heparinized glass tube of very small diameter used to collect blood by capillary action.

(b) *Classification.* Class I (general controls).

Effective date. This regulation shall be effective October 14, 1980.

(Secs. 513, 701(a), 52 Stat. 1055, 90 Stat. 540-546 (21 U.S.C. 360c, 371(a)))

Dated: August 15, 1980.

William F. Randolph,

Acting Associate Commissioner for Regulatory Affairs.

[FR Doc. 80-27331 Filed 9-11-80; 8:45 am]

BILLING CODE 4110-03-M

21 CFR Part 864

[Docket No. 78N-1868]

Classification of Manual Blood Cell Counting Devices

AGENCY: Food and Drug Administration.

ACTION: Final rule.

SUMMARY: The Food and Drug Administration (FDA) is issuing a final rule classifying manual blood cell counting devices into class I (general controls). The effect of classifying a device into class I is to require that the device meet only the general controls applicable to all devices. This action is being taken under the Medical Device Amendments of 1976.

EFFECTIVE DATE: October 14, 1980.

FOR FURTHER INFORMATION CONTACT: Kaiser Aziz, Bureau of Medical Devices (HFK-440), Food and Drug Administration, 8757 Georgia Ave., Silver Spring, MD 20910, 301-427-7550.

SUPPLEMENTARY INFORMATION: FDA published in the Federal Register of September 11, 1979 (44 FR 52950), a proposed regulation explaining the development of the proposed regulations classifying hematology and pathology devices, the medical device classification procedures, and the activities of the Hematology and Pathology Device Section of the Clinical Chemistry and Hematology Devices Panel (formerly the Hematology Device Classification Panel and the Pathology Device Classification Panel). FDA also published in that issue of the Federal Register (44 FR 52991) a proposed regulation to classify manual blood cell counting devices into class I (general controls). A period of 60 days was provided for interested persons to submit written comments to FDA.

The following is a summary of the comments received on the proposal and the agency's response to them:

1. One comment suggested that the proposed identification does not cover manual cell counting devices that do not count all three types of particles: red blood cells, white blood cells, and blood platelets.

FDA agrees with this comment. Therefore, the identification has been modified to clarify that the regulation applies to devices that count one or more of the three particle types specified.

2. One comment suggested that the identification does not distinguish manual cell counting devices from semi-automated cell counting devices or automated cell counting devices.

FDA disagrees with this comment. FDA believes that the modifier "manual" in the device name is self-evident and is sufficient to distinguish this device from automated or semi-automated cell counting devices.

Accordingly, the proposed regulation is being adopted with these changes.

On April 28, 1978, the agency terminated all of the device classification panels and reestablished them with the same functions, but with new names and with a new structure. FDA published notices of these changes in the Federal Register of May 19, 1978 (43 FR 21666, 21667, and 21668) and May 26, 1978 (43 FR 22672 and 22673). Further information regarding the device advisory committees and a list of their new names may be found in the preamble to the general provisions, published elsewhere in this issue of the Federal Register.

Therefore, under the Federal Food, Drug, and Cosmetic Act (secs. 513, 701(a), 52 Stat. 1055, 90 Stat. 540-546 (21 U.S.C. 360c, 371(a))) and under authority delegated to him (21 CFR 5.1), the Commissioner of Food and Drugs is amending Part 864 in Subpart G by adding new § 864.6160, to read as follows:

§ 864.6160 Manual blood cell counting device.

(a) *Identification.* A manual blood cell counting device is a device used to count red blood cells, white blood cells, or blood platelets.

(b) *Classification.* Class I (general controls).

Effective date. This regulation shall be effective October 14, 1980.

(Secs. 513, 701(a), 52 Stat. 1055, 90 Stat. 540-546 (21 U.S.C. 360c, 371(a)))

Dated: August 15, 1980.

William F. Randolph,

Acting Associate Commissioner for Regulatory Affairs.

[FR Doc. 80-27332 Filed 9-11-80; 8:45 am]

BILLING CODE 4110-03-M

21 CFR Part 864

[Docket No. 78N-1869]

Classification of Hematocrit Measuring Devices

AGENCY: Food and Drug Administration.

ACTION: Final rule.

SUMMARY: The Food and Drug Administration (FDA) is issuing a final rule classifying hematocrit measuring devices into class II (performance standards). The effect of classifying a device into class II is to provide for the future development of one or more performance standards to assure the safety and effectiveness of the device. This action is being taken under the Medical Device Amendments of 1976.

EFFECTIVE DATE: October 14, 1980.

FOR FURTHER INFORMATION CONTACT: Kaiser Aziz, Bureau of Medical Devices (HFK-440), Food and Drug Administration, 8757 Georgia Ave., Silver Spring, MD 20910, 301-427-7550.

SUPPLEMENTARY INFORMATION: FDA published in the Federal Register of September 11, 1979 (44 FR 52950), a proposed regulation explaining the development of the proposed regulations classifying hematology and pathology devices, the medical device classification procedures, and the activities of the Hematology and Pathology Device Section of the Clinical Chemistry and Hematology Devices Panel (formerly the Hematology Device Classification Panel and the Pathology Device Classification Panel). FDA also published in that issue of the Federal Register (44 FR 52991) a proposed regulation to classify hematocrit measuring devices into class II (performance standards). A period of 60 days was provided for interested persons to submit written comments to FDA.

The following is a summary of the comments received on the proposal and the agency's response to them:

1. One comment suggested that the description of the significance of the hematocrit is not the same as that found in the proposed regulation for the automated hematocrit instrument, Docket Number 78N-1859.

FDA disagrees with this comment. Both regulations state that the hematocrit is used to distinguish normal from abnormal states. Anemia and erythrocytosis are cited as examples of abnormal states in both regulations.

2. FDA received one comment in support of the proposed class II classification. The comment suggested that all hematocrit readers be standardized to a National Bureau of Standards metric ruler and that all scales be calibrated on that basis.

FDA notes the two suggestions and believes that they should be considered during standards development for the devices.

Accordingly, the proposed regulation is being adopted without change.

On April 28, 1978, the agency terminated all of the device classification panels and reestablished them with the same functions, but with new names and with a new structure. FDA published notices of these changes in the Federal Register of May 19, 1978 (43 FR 21666, 21667, and 21668) and May 26, 1978 (43 FR 22672 and 22673). Further information regarding the device advisory committees and a list of their new names may be found in the preamble to the general provisions, published elsewhere in this issue of the Federal Register.

Therefore, under the Federal Food, Drug, and Cosmetic Act (secs. 513, 701(a), 52 Stat. 1055, 90 Stat. 540–546 (21 U.S.C. 360c, 371(a))) and under authority delegated to him (21 CFR 5.1), the Commissioner of Food and Drugs is amending Part 864 in Subpart G by adding new § 864.6400, to read as follows:

§ 864.6400 Hematocrit measuring device.

(a) *Identification.* A hematocrit measuring device is a system consisting of instruments, tubes, racks, and a sealer and a holder. The device is used to measure the packed red cell volume in blood to determine whether the patient's total red cell volume is normal or abnormal. Abnormal states include anemia (an abnormally low total red cell volume) and erythrocytosis (an abnormally high total red cell mass). The packed red cell volume is produced by centrifuging a given volume of blood.

(b) *Classification.* Class II (performance standards).

Effective date. This regulation shall be effective October 14, 1980.

(Secs. 513, 701(a), 52 Stat. 1055, 90 Stat. 540–546 (21 U.S.C. 360c, 371(a)))

Dated: August 15, 1980.

William F. Randolph,

Acting Associate Commissioner for Regulatory Affairs.

[FR Doc. 80-27333 Filed 9-11-80; 8:45 am]

BILLING CODE 4110-03-M

---

21 CFR Part 864

[Docket No. 78N-1871]

Classification of Occult Blood Tests

AGENCY: Food and Drug Administration.

ACTION: Final rule.

SUMMARY: The Food and Drug Administration (FDA) is issuing a final rule classifying occult blood tests into class II (performance standards). The effect of classifying a device into class II is to provide for the future development of one or more performance standards to assure the safety and effectiveness of the device. This action is being taken under the Medical Device Amendments of 1976.

EFFECTIVE DATE: October 14, 1980.

FOR FURTHER INFORMATION CONTACT: Kaiser Aziz, Bureau of Medical Devices (HFK-440), Food and Drug Administration, 8757 Georgia Ave., Silver Spring, MD 20910, 301-427-7550.

SUPPLEMENTARY INFORMATION: FDA published in the Federal Register of September 11, 1979 (44 FR 52950), a proposed regulation explaining the development of the proposed regulations classifying hematology and pathology devices, the medical device classification procedures, and the activities of the Hematology and Pathology Device Section of the Clinical Chemistry and Hematology Devices Panel (formerly the Hematology Device Classification Panel and the Pathology Device Classification Panel). FDA also published in that issue of the Federal Register (44 FR 52993), a proposed regulation to classify occult blood tests into class II (performance standards). A period of 60 days was provided for interested persons to submit written comments to FDA.

The following is a summary of the comments received on the proposal and the agency's response to them:

1. One comment suggested that occult blood tests for feces specimens are separate and distinct from occult blood tests for urine specimens. The comment noted that the tests are used to screen for conditions which are diverse and of very different medical significance. The comment requested that occult blood tests be classified by two separate rules, one relating to tests for feces specimens and the other relating to tests for urine specimens.

FDA disagrees with this comment. FDA believes that it is unnecessary to write one regulation for occult blood tests for feces specimens and another regulation for occult blood tests for urine specimens. Despite differences in the purpose and use of these tests, it is proper for a single regulation to cover both.

2. One comment suggested that because occult blood tests are used for screening for red blood cells or hemoglobin and not for the purpose of defining or monitoring a disease state, standards prescribing ranges of accuracy, precision, sensitivity, and specificity are not necessary because the risk of misdiagnosis is slight. These devices are used to detect varying levels of occult blood and there are no truly definitive levels to be used as a standard. Therefore, performance standards are inappropriate. The comment also noted that these devices are not used for definitive diagnosis but as part of a larger work-up. Also, because there is no direct contact with the patient, the risk of harm is slight. The comment suggested that occult blood tests be classified into class I.

FDA disagrees with this comment. FDA believes that failure of the device to perform satisfactorily may lead to an error in the diagnosis of gastrointestinal bleeding, renal disease, urinary tract disease, or hemoglobinuria (hemoglobin in the urine) and subsequent inappropriate therapy. FDA believes that standardization of certain features of these tests would result in improved precision, sensitivity, specificity, and accuracy. Therefore these tests would be safer and more effective.

Accordingly, the proposed regulation is being adopted without change.

On April 28, 1978, the agency terminated all of the device classification panels and reestablished them with the same functions, but with new names and with a new structure. FDA published notices of these changes in the Federal Register of May 19, 1978 (43 FR 21666, 21667, and 21668) and May 26, 1978 (43 FR 22672 and 22673). Further information regarding the device advisory committees and a list of their new names may be found in the preamble to the general provisions, published elsewhere in this issue of the Federal Register.

Therefore, under the Federal Food, Drug, and Cosmetic Act (secs. 513, 701(a), 52 Stat. 1055, 90 Stat. 540–546 (21 U.S.C. 360c, 371(a))) and under authority delegated to him (21 CFR 5.1), the Commissioner of Food and Drugs is amending Part 864 in Subpart G by adding new § 864.6550, to read as follows:

§ 864.6550 Occult blood test.

(a) *Identification.* An occult blood test is a device used to detect occult blood in urine or feces. (Occult blood is blood present in such small quantities that it can be detected only by chemical tests of suspected material, or by microscopic or spectroscopic examination.)

(b) *Classification.* Class II (performance standards).

Effective date. This regulation shall be effective October 14, 1980.

(Secs. 513, 701(a), 52 Stat. 1055, 90 Stat. 540–546 (21 U.S.C. 360c, 371(a)))

Dated: August 15, 1980.

William F. Randolph,

Acting Associate Commissioner for Regulatory Affairs.

[FR Doc. 80-27334 Filed 9-11-80; 8:45 am]

BILLING CODE 4110-03-M

21 CFR Part 864

[Docket No. 78N-1872]

Classification of Osmotic Fragility Tests

AGENCY: Food and Drug Administration.

ACTION: Final rule.

SUMMARY: The Food and Drug Administration (FDA) is issuing a final rule classifying osmotic fragility tests into class I (general controls). The effect of classifying a device into Class I is to require that the device meet only the general controls applicable to all devices. This action is being taken under the Medical Device Amendments of 1976.

EFFECTIVE DATE: October 14, 1980.

FOR FURTHER INFORMATION CONTACT: Kaiser Aziz, Bureau of Medical Devices (HFK-440), Food and Drug Administration, 8757 Georgia Ave., Silver Spring, MD 20910, 301-427-7550.

SUPPLEMENTARY INFORMATION: FDA published in the Federal Register of September 11, 1979 (44 FR 52950), a proposed regulation explaining the development of the proposed regulations classifying hematology and pathology devices, the medical device classification procedures, and the activities of the Hematology and Pathology Device Section of the Clinical Chemistry and Hematology Devices Panel (formerly the Hematology Device Classification Panel and the Pathology Device Classification Panel). FDA also published in that issue of the Federal Register (44 FR 52994) a proposed regulation to classify osmotic fragility tests into class I (general controls). A period of 60 days was provided for interested persons to submit written comments to FDA.

No comments have been received regarding the proposed regulation to classify this device. Accordingly, the proposed regulation is being adopted without change.

On April 28, 1978, the agency terminated all of the device classification panels and reestablished them with the same functions, but with new names and with a new structure. FDA published notices of these changes in the Federal Register of May 19, 1978 (43 FR 21666, 21667, and 21668) and May 26, 1978 (43 FR 22672 and 22673). Further information regarding the device advisory committees and a list of their new names may be found in the preamble to the general provisions, published elsewhere in this issue of the Federal Register.

Therefore, under the Federal Food, Drug, and Cosmetic Act (secs. 513, 701(a), 52 Stat. 1055, 90 Stat. 540-546 (21 U.S.C. 360c, 371(a))) and under authority delegated to him (21 CFR 5.1), the Commissioner of Food and Drugs is amending Part 864 in Subpart G by adding new § 864.6600, to read as follows:

§ 864.6600 Osmotic fragility test.

(a) *Identification.* An osmotic fragility test is a device used to determine the resistance of red blood cells to hemolysis (destruction) in varying concentrations of hypotonic saline solutions.

(b) *Classification.* Class I (general controls).

Effective date. This regulation shall be effective October 14, 1980.

(Secs. 513, 701(a), 52 Stat. 1055, 90 Stat. 540-546 (21 U.S.C. 360c, 371(a)))

Dated: August 15, 1980.

William F. Randolph,

Acting Associate Commissioner for Regulatory Affairs.

[FR Doc. 80-27335 Filed 9-11-80; 8:45 am]

BILLING CODE 4110-03-M

21 CFR Part 864

[Docket No. 78N-1873]

Classification of Platelet Adhesion Tests

AGENCY: Food and Drug Administration.

ACTION: Final rule.

SUMMARY: The Food and Drug Administration (FDA) is issuing a final rule classifying platelet adhesion tests into class II (performance standards). The effect of classifying a device into class II is to provide for the future development of one or more performance standards to assure the safety and effectiveness of the device. This action is being taken under the Medical Device Amendments of 1976.

EFFECTIVE DATE: October 14, 1980.

FOR FURTHER INFORMATION CONTACT: Kaiser Aziz, Bureau of Medical Devices (HFK-440), Food and Drug Administration, 8757 Georgia Ave., Silver Spring, MD 20910, 301-427-7550.

SUPPLEMENTARY INFORMATION: FDA published in the Federal Register of September 11, 1979 (44 FR 52950), a proposed regulation explaining the development of the proposed regulations classifying hematology and pathology devices, the medical device classification procedures, and the activities of the Hematology and Pathology Device Section of the Clinical Chemistry and Hematology Devices Panel (formerly the Hematology Device Classification Panel and the Pathology Device Classification Panel). FDA also published in that issue of the Federal Register (44 FR 52995) a proposed regulation to classify platelet adhesion tests into class I (general controls). A period of 60 days was provided for interested persons to submit written comments to FDA.

The one comment received on the proposal objected to the proposed class I classification. The comment noted that, although attempts have been made to standardize these tests, the variables in the test system components have not been clearly identified. The comment stated that many individuals have found the test to be capricious and less reliable than more exact tests available to make a more certain diagnosis of Von Willebrand's disease. The bleeding time, ristocetin platelet aggregation test, immunologic assay of Von Willebrand's factor (factor VIII antigen), and quantitative assay of factor VII were cited as examples of more exact tests. The comment suggested placing platelet adhesion tests in class III due to the ineffectiveness of the test and the dangers of misdiagnosis of Von Willebrand's disease.

FDA disagrees with the comment's suggestion that platelet adhesion tests be classified into class III but agrees that the device should be more stringently regulated than it would be if placed in class I. As explained below, FDA has concluded that the device should be classified into class II.

On November 19, 1979, FDA held a public meeting of the Hematology Devices Section of the Clinical Chemistry and the Hematology Devices Panel at which this comment was considered. At that meeting a representative of the Health Research Group (HRG) presented HRG's view that platelet adhesion tests should be classified into class III rather than class I as proposed. After considering the comment and testimony presented, the Section concluded that general controls are sufficient to provide reasonable assurance of the safety and effectiveness of this test and recommended that the device be classified into class I as proposed.

FDA has carefully considered the comment, the Section's recommendation, and the information presented at the meeting. FDA disagrees that the device should be classified into class III simply because more exact tests exist to confirm a diagnosis of Von Willebrand's disease. If the platelet adhesion test were the sole source of diagnostic information, classification into class III might be justified. However, the test is not used in this manner. It is used in conjunction with at

least four other tests. It is true that the test can be capricious. However, the variables causing this capriciousness are known (i.e., the blood flow rate, the number and type of glass beads in the column, the type of plastic from which the column is constructed, the column length and diameter, and the anticoagulant used) and can be adequately controlled by a performance standard.

Based on the comment and information described above, FDA now believes that general controls alone are not adequate for this device and that sufficient information exists to establish a performance standard. Accordingly, the final regulation is being changed to classify the device into class II. For the reasons stated in the general provisions for hematology and pathology devices, published elsewhere in this issue of the Federal Register, FDA does not believe that it is necessary to issue a new proposal concerning this decision. Persons who disagree with classifying platelet adhesion tests into class II may petition for reclassification under Subpart C of Part 860 of the classification procedures regulation. Accordingly, the proposed regulation is being adopted with a change in device classification from class I to class II.

On April 28, 1978, the agency terminated all of the device classification panels and reestablished them with the same functions, but with new names and with a new structure. FDA published notices of these changes in the Federal Register of May 19, 1978 (43 FR 21666, 21667, and 21668) and May 26, 1978 (43 FR 22672 and 22673). Further information regarding the device advisory committees and a list of their new names may be found in the preamble to the general provisions, published elsewhere in this issue of the Federal Register.

Therefore, under the Federal Food, Drug, and Cosmetic Act (secs. 513, 701(a), 52 Stat. 1055, 90 Stat. 540–546 (21 U.S.C. 360c, 371(a))) and under authority delegated to him (21 CFR 5.1), the Commissioner of Food and Drugs is amending Part 864 in Subpart G by adding new § 864.6650, to read as follows:

§ 864.6650 Platelet adhesion test.

(a) *Identification.* A platelet adhesion test is a device used to determine in vitro platelet function.

(b) *Classification.* Class II (performance standards).

Effective date. This regulation shall be effective October 14, 1980.

(Secs. 513, 701(a), 52 Stat. 1055, 90 Stat. 540–546 (21 U.S.C. 360c, 371(a)))

Dated: August 15, 1980.

William F. Randolph,

Acting Associate Commissioner for Regulatory Affairs.

[FR Doc. 80-27336 Filed 9-11-80; 8:45 am]

BILLING CODE 4110-03-M

---

21 CFR Part 864

[Docket No. 78N-1874]

Classification of Platelet Aggregometers

AGENCY: Food and Drug Administration.

ACTION: Final rule.

SUMMARY: The Food and Drug Administration (FDA) is issuing a final rule classifying platelet aggregometers into class II (performance standards). The effect of classifying a device into class II is to provide for the future development of one or more performance standards to assure the safety and effectiveness of the device. This action is being taken under the Medical Device Amendments of 1976.

EFFECTIVE DATE: October 14, 1980.

FOR FURTHER INFORMATION CONTACT: Kaiser Aziz, Bureau of Medical Devices (HFK-440), Food and Drug Administration, 8757 Georgia Ave., Silver Spring, MD 20910, 301-427-7550.

SUPPLEMENTARY INFORMATION: FDA published in the Federal Register of September 11, 1979 (44 FR 52950), a proposed regulation explaining the development of the proposed regulations classifying hematology and pathology devices, the medical device classification procedures, and the activities of the Hematology and Pathology Device Section of the Clinical Chemistry and Hematology Devices Panel (formerly the Hematology Device Classification Panel and the Pathology Device Classification Panel). FDA also published in that issue of the Federal Register (44 FR 52996) a proposed regulation to classify platelet aggregometers into class II (performance standards). A period of 60 days was provided for interested persons to submit written comments to FDA.

No comments have been received regarding the proposed regulation to classify this device. Accordingly, the proposed regulation is being adopted without change.

On April 28, 1978, the agency terminated all of the device classification panels and reestablished them with the same functions, but with new names and with a new structure. FDA published notices of these changes in the Federal Register of May 19, 1978 (43 FR 21666, 21667, and 21668) and May 26, 1978 (43 FR 22672 and 22673). Further information regarding the device advisory committees and a list of their new names may be found in the preamble to the general provisions, published elsewhere in this issue of the Federal Register.

Therefore, under the Federal Food, Drug, and Cosmetic Act (secs. 513, 701(a), 52 Stat. 1055, 90 Stat. 540–546 (21 U.S.C. 360c, 371(a))) and under authority delegated to him (21 CFR 5.1), the Commissioner of Food and Drugs is amending Part 864 in Subpart G by adding new § 864.6675, to read as follows:

§ 864.6675 Platelet aggregometer.

(a) *Identification.* A platelet aggregometer is a device, used to determine changes in platelet shape and platelet aggregation following the addition of an aggregating reagent to a platelet rich plasma.

(b) *Classification.* Class II (performance standards).

Effective date. This regulation shall be effective October 14, 1980.

(Secs. 513, 701(a), 52 Stat. 1055, 90 Stat. 540–546 (21 U.S.C. 360c, 371(a)))

Dated: August 15, 1980.

William F. Randolph,

Acting Associate Commissioner for Regulatory Affairs.

[FR Doc. 80-27337 Filed 9-11-80; 8:45 am]

BILLING CODE 4110-03-M

---

21 CFR Part 864

[Docket No. 78N-1876]

Classification of Erythrocyte Sedimentation Rate Tests

AGENCY: Food and Drug Administration.

ACTION: Final rule.

SUMMARY: The Food and Drug Administration (FDA) is issuing a final rule classifying erythrocyte sedimentation rate tests into class I (general controls). The effect of classifying a device into class I is to require that the device meet only the general controls applicable to all devices. This action is being taken under the Medical Device Amendments of 1976.

EFFECTIVE DATE: October 14, 1980.

FOR FURTHER INFORMATION CONTACT: Kaiser Aziz, Bureau of Medical Devices (HFK-440), Food and Drug Administration, 8757 Georgia Ave., Silver Spring, MD 20910, 301-427-7550.

SUPPLEMENTARY INFORMATION: FDA published in the Federal Register of September 11, 1979 (44 FR 52950), a proposed regulation explaining the

development of the proposed regulations classifying hematology and pathology devices, the medical device classification procedures, and the activities of the Hematology and Pathology Device Section of the Clinical Chemistry and Hematology Devices Panel (formerly the Hematology Device Classification Panel and the Pathology Device Classification Panel). FDA also published in that issue of the Federal Register (44 FR 52998) a proposed regulation to classify erythrocyte sedimentation rate tests into class I (general controls). A period of 60 days was provided for interested persons to submit written comments to FDA.

No comments have been received regarding the proposed regulation to classify this device. Accordingly, the proposed regulation is being adopted with a minor clarification in the identification.

On April 28, 1978, the agency terminated all of the device classification panels and reestablished them with the same functions, but with new names and with a new structure. FDA published notices of these changes in the Federal Register of May 19, 1978 (43 FR 21666, 21667, and 21668) and May 26, 1978 (43 FR 22672 and 22673). Further information regarding the device advisory committees and a list of their new names may be found in the preamble to the general provisions, published elsewhere in this issue of the Federal Register.

Therefore, under the Federal Food, Drug, and Cosmetic Act (secs. 513, 701(a), 52 Stat. 1055, 90 Stat. 540–546 (21 U.S.C. 360c, 371(a))) and under authority delegated to him (21 CFR 5.1), the Commissioner of Food and Drugs is amending Part 864 in Subpart G by adding new § 864.6700, to read as follows:

§ 864.6700 Erythrocyte sedimentation rate test.

(a) *Identification.* An erythrocyte sedimentation rate test is a device that measures the length of time required for the red cells in a blood sample to fall a specified distance or a device that measures the degree of sedimentation taking place in a given length of time. An increased rate indicates tissue damage or inflammation.

(b) *Classification.* Class I (general controls).

Effective date. This regulation shall be effective October 14, 1980.

(Secs.513, 701(a), 52 Stat. 1055, 90 Stat. 540–546 (21 U.S.C. 360c, 371(a)))

Dated: August 15, 1980.

William F. Randolph,

Acting Associate Commissioner for Regulatory Affairs.

[FR Doc. 80-27338 Filed 9-11-80; 8:45 am]

BILLING CODE 4110-03-M

---

21 CFR Part 864

[Docket No. 78N-1877]

Classification of Adenosine Triphosphate Release Assays

AGENCY: Food and Drug Administration.

ACTION: Final rule.

SUMMARY: The Food and Drug Administration (FDA) is issuing a final rule classifying adenosine triphosphate release assays into class I (general controls). The effect of classifying a device into class I is to require that the device meet only the general controls applicable to all devices. This action is being taken under the Medical Device Amendments of 1976.

EFFECTIVE DATE: October 14, 1980.

FOR FURTHER INFORMATION CONTACT: Kaiser Aziz, Bureau of Medical Devices (HFK-440), Food and Drug Administration, 8757 Georgia Ave., Silver Spring, MD 20910, 301-427-7550.

SUPPLEMENTARY INFORMATION: FDA published in the Federal Register of September 11, 1979 (44 FR 52950), a proposed regulation explaining the development of the proposed regulations classifying hematology and pathology devices, the medical device classification procedures, and the activities of the Hematology and Pathology Device Section of the Clinical Chemistry and Hematology Devices Panel (formerly the Hematology Device Classification Panel and the Pathology Device Classification Panel). FDA also published in that issue of the Federal Register (44 FR 52999) a proposed regulation to classify adenosine triphosphate release assays into class I (general controls). A period of 60 days was provided for interested persons to submit written comments to FDA.

One comment was received on the proposal. The following is a summary of this comment and the agency's response to it:

The comment stated that the proposed regulation does not provide an adequate definition of the products or the diseases to be treated. The comment suggested that the regulation providing the classification of these products be reproposed with adequate identification.

FDA agrees that the identification that was proposed requires clarification. Therefore, the device name and identification have been modified to specify adenosine triphosphate and to describe the test procedure and the disease conditions.

However, FDA does not agree that it is necessary to repropose the regulation classifying these products. For the reasons stated in the general provisions for hematology and pathology devices, published elsewhere in this issue of the Federal Register, FDA does not believe that it is necessary to issue a new proposal concerning this decision. Accordingly, the proposed rule has been adopted with the noted changes.

On April 28, 1978, the agency terminated all of the device classification panels and reestablished them with the same functions, but with new names and with a new structure. FDA published notices of these changes in the Federal Register of May 19, 1978 (43 FR 21666, 21667, and 21668) and May 26, 1978 (43 FR 22672 and 22673). Further information regarding the device advisory committees and a list of their new names may be found in the preamble to the general provisions, published elsewhere in this issue of the Federal Register.

Therefore, under the Federal Food, Drug, and Cosmetic Act (secs. 513, 701(a), 52 Stat. 1055, 90 Stat. 540–546 (21 U.S.C. 360c, 371(a))) and under authority delegated to him (21 CFR 5.1), the Commissioner of Food and Drugs is amending Part 864 in Subpart H by adding new § 864.7040, to read as follows:

Subpart H—Hematology Kits and Packages

§ 864.7040 Adenosine triphosphate release assay.

(a) *Identification.* An adenosine triphosphate release assay is a device that measures the release of adenosine triphosphate (ATP) from platelets following aggregation. This measurement is made on platelet-rich plasma using a photometer and a luminescent firefly extract. Simultaneous measurements of platelet aggregation and ATP release are used to evaluate platelet function disorders.

(b) *Classification.* Class I (general controls).

Effective date. This regulation shall be effective October 14, 1980.

(Secs. 513, 701(a), 52 Stat. 1055, 90 Stat. 540–546 (21 U.S.C. 360c, 371(a)))

Dated: August 15, 1980.

William F. Randolph,

Acting Associate Commissioner for Regulatory Affairs.

[FR Doc. 80-27339 Filed 9-11-80; 8:45 am]

BILLING CODE 4110-03-M

21 CFR Part 864

[Docket No. 78N-1878]

Classification of Antithrombin III Assays

AGENCY: Food and Drug Administration

ACTION: Final rule.

SUMMARY: The Food and Drug Administration (FDA) is issuing a final rule classifying antithrombin III assays into class II (performance standards). The effect of classifying a device into class II is to provide for the future development of one or more performance standards to assure the safety and effectiveness of the device. This action is being taken under the Medical Device Amendments of 1976.

EFFECTIVE DATE: October 14, 1980.

FOR FURTHER INFORMATION CONTACT: Kaiser Aziz, Bureau of Medical Devices (HFK-440), Food and Drug Administration, 8757 Georgia Ave., Silver Spring, MD 20910, 301-427-7550.

SUPPLEMENTARY INFORMATION: FDA published in the Federal Register of September 11, 1979 (44 FR 52950), a proposed regulation explaining the development of the proposed regulations classifying hematology and pathology devices, the medical device classification procedures, and the activities of the Hematology and Pathology Device Section of the Clinical Chemistry and Hematology Devices Panel (formerly the Hematology Device Classification Panel and the Pathology Device Classification Panel). FDA also published in that issue of the Federal Register (44 FR 53000) a proposed regulation to classify antithrombin III assays into class II (performance standards). A period of 60 days was provided for interested persons to submit written comments to FDA.

No comments have been received regarding the proposed regulation to classify this device. Accordingly, the proposed regulation is being adopted without change.

On April 28, 1978, the agency terminated all of the device classification panels and reestablished them with the same functions, but with new names and with a new structure. FDA published notices of these changes in the Federal Register of May 19, 1978 (43 FR 21666, 21667, and 21668) and May 26, 1978 (43 FR 22672 and 22673). Further information regarding the device advisory committees and a list of their new names may be found in the preamble to the general provisions, published elsewhere in this issue of the Federal Register.

Therefore, under the Federal Food, Drug, and Cosmetic Act (secs. 513, 701(a), 52 Stat. 1055, 90 Stat. 540-546 (21 U.S.C. 360c, 371(a))) and under authority delegated to him (21 CFR 5.1), the Commissioner of Food and Drugs is amending Part 864 in Subpart H by adding new § 864.7060, to read as follows:

§ 864.7060 Antithrombin III assay.

(a) *Identification.* An antithrombin III assay is a device that is used to determine the plasma level of antithrombin III (a substance which acts with the anticoagulant heparin to prevent coagulation). This determination is used to monitor the administration of heparin in the treatment of thrombosis. The determination may also be used in the diagnosis of thrombophilia (a congenital deficiency of antithrombin III).

(b) *Classification.* Class II (performance standards).

Effective date. This regulation shall be effective October 14, 1980.

(Secs. 513, 701(a), 52 Stat. 1055, 90 Stat. 540-546 (21 U.S.C. 360c, 371(a)))

Dated August 15, 1980.

William F. Randolph,

Acting Associate Commissioner for Regulatory Affairs.

[FR Doc. 80-27340 Filed 9-11-80; 8:45 am]

BILLING CODE 4110-03-M

---

21 CFR Part 864

[Docket No. 78N-1879]

Classification of Red Blood Cell Enzyme Assays

AGENCY: Food and Drug Administration.

ACTION: Final rule.

SUMMARY: The Food and Drug Administration (FDA) is issuing a final rule classifying red blood cell enzyme assays into class II (performance standards). The effect of classifying a device into class II is to provide for the future development of one or more performance standards to assure the safety and effectiveness of the device. This action is being taken under the Medical Device Amendments of 1976.

EFFECTIVE DATE: October 14, 1980.

FOR FURTHER INFORMATION CONTACT: Kaiser Aziz, Bureau of Medical Devices (HFK-440), Food and Drug Administration, 8757 Georgia Ave., Silver Spring, MD 20910, 301-427-7550.

SUPPLEMENTARY INFORMATION: FDA published in the Federal Register of September 11, 1979 (44 FR 52950), a proposed regulation explaining the development of the proposed regulations classifying hematology and pathology devices, the medical device classification procedures, and the activities of the Hematology and Pathology Device Section of the Clinical Chemistry and Hematology Devices Panel (formerly the Hematology Device Classification Panel and the Pathology Device Classification Panel). FDA also published in that issue of the Federal Register (44 FR 53001) a proposed regulation to classify cell enzyme assays into class II (performance standards). A period of 60 days was provided for interested persons to submit written comments to FDA.

The one comment received on the proposal suggested that including the purpose of the assay in the identification was unnecessary.

FDA disagrees with this comment. FDA believes that including an example of the diagnostic use of a device provides a more complete identification of the diagnostic device. The agency has made minor changes in the name and identification of the device to make it clear that the rule applies to red blood cell enzyme assays. Accordingly, the proposed regulation has been adopted with the changes noted.

On April 28, 1978, the agency terminated all of the device classification panels and reestablished them with the same functions, but with new names and with a new structure. FDA published notices of these changes in the Federal Register of May 19, 1978 (43 FR 21666, 21667, and 21668) and May 26, 1978 (43 FR 22672 and 22673). Further information regarding the device advisory committees and a list of their new names may be found in the preamble to the general provisions, published elsewhere in this issue of the Federal Register.

Therefore, under the Federal Food, Drug, and Cosmetic Act (secs. 513, 701(a), 52 Stat. 1055, 90 Stat. 540-546 (21 U.S.C. 360c, 371(a))) and under authority delegated to him (21 CFR 5.1), the Commissioner of Food and Drugs is amending Part 864 in Subpart H by adding new § 864.7100, to read as follows:

§ 864.7100 Red blood cell enzyme assay.

(a) *Identification.* Red blood cell enzyme assay is a device used to measure the activity in red blood cells of clinically important enzymatic reactions and their products, such as pyruvate kinase, or 2,3-diphosphoglycerate. A red blood cell enzyme assay is used to determine the enzyme defects responsible for a patient's hereditary hemolytic anemia.

(b) *Classification.* Class II (performance standards).

Effective date. This regulation shall be effective October 14, 1980.

(Secs. 513, 701(a), 52 Stat. 1055, 90 Stat. 540–546 (21 U.S.C. 360c, 371(a)))

Dated: August 15, 1980.

William F. Randolph,

Acting Associate Commissioner for Regulatory Affairs.

[FR Doc. 80-27341 Filed 9-11-80; 8:45 am]

BILLING CODE 4110-03-M

21 CFR Part 864

[Docket No. 78N-1880]

Classification of Activated Whole Blood Clotting Time Tests

AGENCY: Food and Drug Administration.

ACTION: Final rule.

SUMMARY: The Food and Drug Administration (FDA) is issuing a final rule classifying activated whole blood clotting time tests into class II (performance standards). The effect of classifying a device into class II is to provide for the future development of one or more performance standards to assure the safety and effectiveness of the device. This action is being taken under the Medical Device Amendments of 1976.

EFFECTIVE DATE: October 14, 1980.

FOR FURTHER INFORMATION CONTACT: Kaiser Aziz, Bureau of Medical Devices (HFK-440), Food and Drug Administration, 8757 Georgia Ave., Silver Spring, MD 20910, 301-427-7550.

SUPPLEMENTARY INFORMATION: FDA published in the Federal Register of September 11, 1979 (44 FR 52950), a proposed regulation explaining the development of the proposed regulations classifying hematology and pathology devices, the medical device classification procedures, and the activities of the Hematology and Pathology Device Section of the Clinical Chemistry and Hematology Devices Panel (formerly the Hematology Device Classification Panel and the Pathology Device Classification Panel). FDA also published in that issue of the Federal Register (44 FR 53003) a proposed regulation to classify activated whole blood clotting time tests into class II (performance standards). A period of 60 days was provided for interested persons to submit written comments to FDA.

The following is a summary of the comments received on the proposal and the agency's response to them:

1. One comment suggested classification of the test into class III rather than class II as proposed, because insufficient information exists to establish a performance standard that will provide reasonable assurance of the safety and effectiveness of this test.

FDA disagrees with this comment. FDA believes that use of this test for over 10 years has provided sufficient data to establish a performance standard that will ensure the safety and effectiveness of this device.

2. One comment noted that the activated whole blood clotting time tests is not used to monitor therapy for deficiencies of coagulation factors VII, IX, and XI as is suggested by the proposed identification. The comment requested that the identification be amended to remove any reference to the use of this test to monitor therapy for specific coagulation factor deficiencies.

FDA agrees with this comment. Therefore, the proposed regulation is being adopted with changes in the identification to remove the reference to the use of this test to monitor therapy for deficiencies of coagulation factors VII, IX, and XI.

On April 28, 1978, the agency terminated all of the device classification panels and reestablished them with the same functions, but with new names and with a new structure. FDA published notices of these changes in the Federal Register of May 19, 1978 (43 FR 21666, 21667, and 21668) and May 26, 1978 (43 FR 22672 and 22673). Further information regarding the device advisory committees and a list of their new names may be found in the premable to the general provisions, published elsewhere in this issue of the Federal Register.

Therefore, under the Federal Food, Drug, and Cosmetic Act (secs. 513, 701(a), 52 Stat. 1055, 90 Stat. 540–546 (21 U.S.C. 360c, 371(a))) and under authority delegated to him (21 CFR 5.1), the Commissioner of Food and Drugs is amending Part 864 in Subpart H by adding new § 864.7140, to read as follows:

§ 864.7140 Activated whole blood clotting time tests.

(a) *Identification.* An activated whole blood clotting time tests is a device, used to monitor heparin therapy for the treatment of venous thrombosis or pulmonary embolism by measuring the coagulation time of whole blood.

(b) *Classification.* Class II (performance standards).

Effective date. This regulation shall be effective October 14, 1980.

(Secs. 513, 701(a), 52 Stat. 1055, 90 Stat. 540–546 (21 U.S.C. 360c, 371(a)))

Dated: August 15, 1980.

William F. Randolph,

Acting Associate Commissioner for Regulatory Affairs.

[FR Doc. 80-27342 Filed 9-11-80; 8:45 am]

BILLING CODE 4110-03-M

21 CFR Part 864

[Docket No. 78N-1881]

Classification of Erythropoietin Assays

AGENCY: Food and Drug Administration.

ACTION: Final rule.

SUMMARY: The Food and Drug Administration (FDA) is issuing a final rule classifying erythropoietin assays into class III (premarket approval). The effect of classifying a device into class III is to require each manufacturer of the device to submit to FDA a premarket approval application that includes information concerning safety and effectiveness tests for the device. Each application must be submitted to FDA on or before April 29, 1983, or 90 days after promulgation of a separate regulation requiring premarket approval of the device, whichever occurs later. This action is being taken under the Medical Device Amendments of 1976.

EFFECTIVE DATE: October 14, 1980.

FOR FURTHER INFORMATION CONTACT: Kaiser Aziz, Bureau of Medical Devices (HFK-440), Food and Drug Administration, 8757 Georgia Ave., Silver Spring, MD 20910, 301-427-7550.

SUPPLEMENTARY INFORMATION: FDA published in the Federal Register of September 11, 1979 (44 FR 52950), a proposed regulation explaining the development of the proposed regulations classifying hematology and pathology devices, the medical device classification procedures, and the activities of the Hematology and Pathology Device Section of the Clinical Chemistry and Hematology Devices Panel (formerly the Hematology Device Classification Panel and the Pathology Device Classification Panel). FDA also published in that issue of the Federal Register (44 FR 53003) a proposed regulation to classify erythropoietin assays into class III (premarket approval). A period of 60 days was provided for interested persons to submit written comments to FDA.

The following is a summary of the comments received on the proposal and the agency's response to them:

1. A comment from the National Committee for Clinical Laboratory Standards (NCCLS) objected to the implication in the proposed regulation

that the NCCLS recommended that the commerically available hemagglutination inhibition (HAI) assay for erythropoietin not be used for clinical purposes. The comment stated that the proposed regulations misrepresents the deliberative process used by NCCLS standards committees. The comment explained that it is the responsibility of the NCCLS to develop consensus standards and that the NCCLS does not evaluate commercial products for analyte determination and publish the results of the evaluation. The comment explained that an NCCLS subcommittee had considered commercial HAI assays. However, the only resulting recommendation was NCCLS proposed standard PSH-6, Standard Assay for the Determination of Erythropoietin Activity in Body Fluids. It was also noted that the NCCLS subcommittee deliberations took place at least one and one half years ago and subsequent developments may have made the work of the subcommittee obsolete.

FDA acknowledges that the proposed regulation did not accurately represent the deliberative process employed by NCCLS standards committees. The proposed regulation incorrectly described the statement on HAI assays as a draft of an NCCLS recommendation when in fact it was a draft prepared by an NCCLS subcommittee and did not receive the endorsement of the NCCLS.

2. Two comments objected to the proposal to classify erythropoietin assays into class III. The comments suggested that sufficient information is available to establish a performance standard. One comment cited several years of experience with this assay. The comment noted that the test is able to distinguish low, normal, and high levels of erythropoietin in human serum and it is a useful diagnostic aid in separating primary from secondary erythrocytosis and elucidating the etiology of certain anemias. One comment stated that the Hematology Device Classification Panel has based its classification recommendation on an experimental assay employing sheep erythrocytes rather than the erythropoietin test for human use that is currently marketed.

FDA disagrees with the comment and is classifying erythropoietin assays into class III as proposed.

On November 19, 1979, FDA held a public meeting of the Hematology Section of the Clinical Chemistry and Hematology Devices Panel to consider the comments received on the proposal to classify the erythropoietin assay into class III. At the meeting, Ms. Tommy Jordan, a representative of JCL Clincial Research Corporation, and Susan A. Rothman of the Cleveland Clinic presented data supporting their view that the erythropoietin assay should be classified into class II rather than class III as proposed.

After considering the comments and the additional data and testimony presented to the Section, the Section concluded that the data presented was not sufficient to establish a performance standard that would provide reasonable assurance of the safety and effectiveness of the device. Moreover, the device can be of substantial importance in preventing impairment of human health. The Section recommended that this device be classified into class III as proposed. FDA agrees with the Section and is adopting the proposed regulation without change.

On April 28, 1978, the agency terminated all of the device classification panels and reestablished them with the same functions, but with new names and with a new structure. FDA published notices of these changes in the Federal Register of May 19, 1978 (43 FR 21666, 21667, and 21668) and May 26, 1978 (43 FR 22672 and 22673). Further information regarding the device advisory committees and a list of their new names may be found in the premable to the general provisions, published elsewhere in this issue of the Federal Register.

Therefore, under the Federal Food, Drug, and Cosmetic Act (secs. 513, 701(a), 52 Stat. 1055, 90 Stat. 540–546 (21 U.S.C. 360c, 371(a))) and under authority delegated to him (21 CFR 5.1), the Commissioner of Food and Drugs is amending Part 864 in Subpart H by adding new § 864.7250, to read as follows:

§ 864.7250 Erythropoietin assay.

(a) *Identification.* A erythropoietin assay is a device that measures the concentration of erythropoietin (an enzyme that regulates the production of red blood cells) in serum or urine. This assay provides diagnostic information for the evaluation of erythrocytosis (increased total red cell mass) and anemia.

(b) *Classification.* Class III (premarket approval).

Effective date. This regulation shall be effective October 14, 1980.

(Secs. 513, 701(a), 52 Stat. 1055, 90 Stat. 540–546 (21 U.S.C. 360c, 371(a)))

Dated: August 15, 1980.

William F. Randolph,

Acting Associate Commissioner for Regulatory Affairs.

[FR Doc. 80-27343 Filed 9-11-80; 8:45 am]

BILLING CODE 4110-03-M

---

21 CFR Part 864

[Docket No. 78N-1882]

Classification of Euglobulin Lysis Time Tests

AGENCY: Food and Drug Administration.

ACTION: Final rule.

SUMMARY: The Food and Drug Administration (FDA) is issuing a final rule classifying euglobulin lysis time tests into class II (performance standards). The effect of classifying a device into class II is to provide for the future development of one or more performance standards to assure the safety and effectiveness of the device. This action is being taken under the Medical Device Amendments of 1976.

EFFECTIVE DATE: October 14, 1980.

FOR FURTHER INFORMATION CONTACT: Kaiser Aziz, Bureau of Medical Devices (HFK-440), Food and Drug Administration, 8757 Georgia Ave., Silver Spring, MD 20910, 301-427-7550.

SUPPLEMENTARY INFORMATION: FDA published in the Federal Register of September 11, 1979 (44 FR 52950), a proposed regulation explaining the development of the proposed regulations classifying hematology and pathology devices, the medical device classification procedures, and the activities of the Hematology and Pathology Device Section of the Clinical Chemistry and Hematology Devices Panel (formerly the Hematology Device Classification Panel and the Pathology Device Classification Panel). FDA also published in that issue of the Federal Register (44 FR 53005) a proposed regulation to classify euglobulin lysis time tests into class II (performance standards). A period of 60 days was provided for interested persons to submit written comments to FDA.

No comments have been recieved regarding the proposed regulation to classify this device. Accordingly, the proposed regulation is being adopted without change.

On April 28, 1978, the agency terminated all of the device classification panels and reestablished them with the same functions, but with new names and with a new structure. FDA published notices of these changes in the Federal Register of May 19, 1978 (43 FR 21666, 21667, and 21668) and May

26, 1978 (43 FR 22672 and 22673). Further information regarding the device advisory committees and a list of their new names may be found in the preamble to the general provisions, published elsewhere in this issue of the Federal Register.

Therefore, under the Federal Food, Drug, and Cosmetic Act (secs. 513, 701(a), 52 Stat. 1055, 90 Stat. 540–546 (21 U.S.C. 360c, 371(a))) and under authority delegated to him (21 CFR 5.1), the Commissioner of Food and Drugs is amending Part 864 in Subpart H by adding new § 864.7275, to read as follows:

§ 864.7275 Euglobulin lysis time tests.

(a) *Identification.* A euglobulin lysis time test is a device that measures the length of time required for the lysis (dissolution) of a clot formed from fibrinogen in the euglobulin fraction (that fraction of the plasma responsible for the formation of plasmin, a clot lysing enzyme). This test evaluates natural fibrinolysis (destruction of a blood clot after bleeding has been arrested). The test also will detect accelerated fibrinolysis.

(b) *Classification.* Class II (performance standards).

Effective date. This regulation shall be effective October 14, 1980.

(Secs. 513, 701(a), 52 Stat. 1055, 90 Stat. 540–546 (21 U.S.C. 360c, 371(a)))

Dated: August 15, 1980.

William F. Randolph,

Acting Associate Commissioner for Regulatory Affairs.

[FR Doc. 80-27344 Filed 9-11-80; 8:45 am]

BILLING CODE 4110-03-M

21 CFR Part 864

[Docket No. 78N-1883]

Classification of Factor Deficiency Tests

AGENCY: Food and Drug Administration.

ACTION: Final rule.

SUMMARY: The Food and Drug Administration (FDA) is issuing a final rule classifying factor deficiency tests into class II (performance standards). The effect of classifying a device into class II is to provide for the future development of one or more performance standards to assure the safety and effectiveness of the device. This action is being taken under the Medical Device Amendments of 1976.

EFFECTIVE DATE: October 14, 1980.

FOR FURTHER INFORMATION CONTACT: Kaiser Aziz, Bureau of Medical Devices (HFK-440), Food and Drug Administration, 8757 Georgia Ave., Silver Spring, MD 20910, 301-427-7550.

SUPPLEMENTARY INFORMATION: FDA published in the Federal Register of September 11, 1979 (44 FR 52950), a proposed regulation explaining the development of the proposed regulations classifying hematology and pathology devices, the medical device classification procedures, and the activities of the Hematology and Pathology Device Section of the Clinical Chemistry and Hematology Devices Panel (formerly the Hematology Device Classification Panel and the Pathology Device Classification Panel). FDA also published in that issue of the Federal Register (44 FR 53006) a proposed regulation to classify factor deficiency tests into class II (performance standards). A period of 60 days was provided for interested persons to submit written comments to FDA.

No comments have been received regarding the proposed regulation to classify this device. Accordingly, the proposed regulation is being adopted without change.

On April 28, 1978, the agency terminated all of the device classification panels and reestablished them with the same functions, but with new names and with a new structure. FDA published notices of these changes in the Federal Register of May 19, 1978 (43 FR 21666, 21667, and 21668) and May 26, 1978 (43 FR 22672 and 22673). Further information regarding the device advisory committees and a list of their new names may be found in the preamble to the general provisions, published elsewhere in this issue of the Federal Register.

Therefore, under the Federal Food, Drug, and Cosmetic Act (secs. 513, 701(a), 52 Stat. 1055, 90 Stat. 540–546 (21 U.S.C. 360c, 371(a))) and under authority delegated to him (21 CFR 5.1), the Commissioner of Food and Drugs is amending Part 864 in Subpart H by adding new § 864.7290, to read as follows:

§ 864.7290 Factor deficiency test.

(a) *Identification.* A factor deficiency test is a device used to diagnose specific coagulation defects, to monitor certain types of therapy, to detect coagulation inhibitors, and to detect a carrier state (a person carrying both a recessive gene for a coagulation factor deficiency such as hemophilia and the corresponding normal gene).

(b) *Classification.* Class II (performance standards).

Effective date. This regulation shall be effective October 14, 1980.

(Secs. 513, 701(a), 52 Stat. 1055, 90 Stat. 540–546 (21 U.S.C. 360c, 371(a)))

Dated: August 15, 1980.

William F. Randolph,

Acting Associate Commissioner for Regulatory Affairs.

[FR Doc. 80-27345 Filed 9-11-80; 8:45 am]

BILLING CODE 4110-03-M

21 CFR Part 864

[Docket No. 78N-1884]

Classification of Fibrin Monomer Paracoagulation Tests

AGENCY: Food and Drug Administration.

ACTION: Final rule.

SUMMARY: The Food and Drug Administration (FDA) is issuing a final rule classifying fibrin monomer paracoagulation tests into class III (premarket approval). The effect of classifying a device into Class III is to require each manufacturer of the device to submit to FDA a premarket approval application that includes information concerning safety and effectiveness tests for the device. Each application must be submitted to FDA on or before April 29, 1983, or 90 days after promulgation of a separate regulation requiring premarket approval of the device, whichever occurs later. This action is being taken under the Medical Device Amendments of 1976.

EFFECTIVE DATE: October 14, 1980.

FOR FURTHER INFORMATION CONTACT: Kaiser Aziz, Bureau of Medical Devices (HFK-440), Food and Drug Administration, 8757 Georgia Ave., Silver Spring, MD 20910, 301-427-7550.

SUPPLEMENTARY INFORMATION: FDA published in the Federal Register of September 11, 1979 (44 FR 52950), a proposed regulation explaining the development of the proposed regulations classifying hematology and pathology devices, the medical device classification procedures, and the activities of the Hematology and Pathology Device Section of the Clinical Chemistry and Hematology Devices Panel (formerly the Hematology Device Classification Panel and the Pathology Device Classification Panel). FDA also published in that issue of the Federal Register (44 FR 53007) a proposed regulation to classify fibrin monomer paracoagulation tests into class II (performance standards). A period of 60 days was provided for interested persons to submit written comments to FDA.

The one comment received on the proposal objected to the proposed classification of the fibrin monomer

paracoagulation test into class II. The comment stated that insufficient information exists to establish a performance standard that will ensure its safety and efficacy. The comment noted that the test lacks the sensitivity and specificity of other tests used for the diagnosis of disseminated intravascular coagulation (DIC). Because DIC is a potentially life-threatening disorder, failure to diagnose DIC presents a significant risk to the patient.

FDA agrees with the comment and is publishing a final regulation classifying the device into class III.

On November 19, 1979, FDA held a public meeting of the Hematology Devices Section of the Clinical Chemistry and Hematology Devices Panel. At the meeting a representative of the Health Research Group (HRG) presented HRG's view that the fibrin monomer paracoagulation test should be classified into class III rather than class II as proposed.

Based on the comments received, the testimony presented at the meeting and the Section's recommendation to classify the device into class III, FDA has concluded that insufficient information exists to establish a performance standard for the device and is classifying the device into class III rather than class II as proposed. The device is for use of substantial importance in preventing impairment of human health, and the device presents a potential unreasonable risk of illness or injury. For the reasons stated in the general provisions for hematology and pathology devices, published elsewhere in this issue of the Federal Register, FDA does not believe that it is necessary to issue a new proposal concerning this decision. Persons who disagree with classifying fibrin monomer paracoagulation tests into class III may petition for reclassification of the device under Subpart C of part 860 of the classification procedures regulation.

On April 28, 1978, the agency terminated all of the device classification panels and reestablished them with the same functions, but with new names and with a new structure. FDA published notices of these changes in the Federal Register of May 19, 1978 (43 FR 21666, 21667, and 21668) and May 26, 1978 (43 FR 22672 and 22673). Further information regarding the device advisory committees and a list of their new names may be found in the preamble to the general provisions, published elsewhere in this issue of the Federal Register.

Therefore, under the Federal Food, Drug, and Cosmetic Act (secs. 513, 701(a), 52 Stat. 1055, 90 Stat. 540–546 (21 U.S.C. 360c, 371(a))) and under authority delegated to him (21 CFR 5.1), the Commissioner of Food and Drugs is amending Part 864 in Subpart H by adding new § 864.7300, to read as follows:

§ 864.7300 Fibrin monomer paracoagulation test.

(a) *Identification.* A fibrin monomer paracoagulation test is a device used to detect fibrin monomer in the diagnosis of disseminated intravascular coagulation (nonlocalized clotting within a blood vessel) or in the differential diagnosis between disseminated intravascular coagulation and primary fibrinolysis (dissolution of the fibrin in a blood clot).

(b) *Classification.* Class III (premarket approval).

Effective date. This regulation shall be effective October 14, 1980.

(Secs. 513, 701(a), 52 Stat. 1055, 90 Stat. 540–546 (21 U.S.C. 360c, 371(a)))

Dated: August 15, 1980.

William F. Randolph,

Acting Associate Commissioner of Regulatory Affairs.

[FR Doc. 80-27346 Filed 9-11-80; 8:45 am]

BILLING CODE 4110-03-M

---

21 CFR Part 864

[Docket No. 78N-1885]

Classification of Fibrinogen/Fibrin Degradation Products Assays

AGENCY: Food and Drug Administration.

ACTION: Final rule.

SUMMARY: The Food and Drug Administration (FDA) is issuing a final rule classifying fibrinogen/fibrin degradation products assays into class II (performance standards). The effect of classifying a device into class II is to provide for the future development of one or more performance standards to assure the safety and effectiveness of the device. This action is being taken under the Medical Device Amendments of 1976.

EFFECTIVE DATE: October 14, 1980.

FOR FURTHER INFORMATION CONTACT: Kaiser Aziz, Bureau of Medical Devices (HFK-440), Food and Drug Administration, 8757 Georgia Ave., Silver Spring, MD 20910, 301-427-7550.

SUPPLEMENTARY INFORMATION: FDA published in the Federal Register of September 11, 1979 (44 FR 52950), a proposed regulation explaining the development of the proposed regulations classifying hematology and pathology devices, the medical device classification procedures, and the activities of the Hematology and Pathology Device Section of the Clinical Chemistry and Hematology Devices Panel (formerly the Hematology Device Classification Panel and the Pathology Device Classification Panel). FDA also published in that issue of the Federal Register (44 FR 53008) a proposed regulation to classify fibrinogen/fibrin degradation products assays into class II (performance standards). A period of 60 days was provided for interested persons to submit written comments to FDA.

The following is a summary of the comments received on the proposal and the agency's response to them:

1. One comment stated that the term "fibrin split products" has been replaced by the nomenclature "fibrinogen/fibrin degradation products" or "FDP". The comment also provided several references reflecting current usage of this nomenclature (Refs. 1 and 2). The comment suggested that the classification name be changed to reflect current terminology.

FDA agrees with this comment. Therefore, the device name in the final regulation has been changed to "fibrinogen/fibrin degradation products assays."

2. One comment requested that the staphylococcal clumping methodology not be considered a reference methodology for these assays. The comment suggested that the tanned red cell hemagglutination inhibition assay is commonly considered as the basic research methodology. Performance standards could be developed for the tanned red cell hemagglutination inhibition assays and for latex agglutination. The comment expressed hope that the standards development process would reflect current nomenclature and technology.

FDA agrees that standards development should represent current terminology and techology. However, it should be noted that the proposed regulation presented the staphylococcal clumping methodology only as an example of one of the methodologies currently available and not as the reference methodology. Accordingly, the proposed regulation is being adopted with these changes.

On April 28, 1978, the agency terminated all of the device classification panels and reestablished them with the same functions, but with new names and with a new structure. FDA published notices of these changes in the Federal Register of May 19, 1978 (43 FR 21666, 21667, and 21668) and May 26, 1978 (43 FR 22672 and 22673). Further information regarding the device advisory committees and a list of their new names may be found in the

preamble to the general provisions, published elsewhere in this issue of the Federal Register.

References

1. Wilson, J. E. and R. D. Thornton, "Comparison of a Direct Latex-Agglutination Technic with the Tanned Red Cell Hemmagglutin."

2. Sumner, K. et al., "Evaluation of Two New Assays for Determination of Serum Fibrinogen/Fibrin Degradation Products," *Annals of Clinical and Laboratory Science, 9(5):362–367, 1979.*

Therefore, under the Federal Food, Drug, and Cosmetic Act (secs. 513, 701(a), 52 Stat. 1055, 90 Stat. 540–546 (21 U.S.C. 360c, 371(a))) and under authority delegated to him (21 CFR 5.1), the Commissioner of Food and Drugs is amending Part 864 in Subpart H by adding new § 864.7320, to read as follows:

§ 864.7320 Fibrinogen/fibrin degradation products assay.

(a) *Identification.* A fibrinogen/fibrin degradation products assay is a device used to detect and measure fibrinogen degradation products and fibrin degradation products (protein fragments produced by the enzymatic action of plasmin on fibrinogen and fibrin) as an aid in detecting the presence and degree of intravascular coagulation and fibrinolysis (the dissolution of the fibrin in a blood clot) and in monitoring therapy for disseminated intravascular coagulation (nonlocalized clotting in the blood vessels).

(b) *Classification.* Class II (performance standards).

Effective date. This regulation shall be effective October 14, 1980.

(Secs. 513, 701(a), 52 Stat. 1055, 90 Stat. 540–546 (21 U.S.C. 360c, 371(a)))

Dated: August 15, 1980.

William F. Randolph,

Acting Associate Commissioner for Regulatory Affairs.

[FR Doc. 80-27347 Filed 9-11-80; 8:45 am]

BILLING CODE 4110-03-M

---

21 CFR Part 864

[Docket No. 78N-1886]

Classification of Fibrinogen Determination Systems

AGENCY: Food and Drug Administration.

ACTION: Final rule.

SUMMARY: The Food and Drug Administration (FDA) is issuing a final rule classifying fibrinogen determination systems into class II (performance standards). The effect of classifying a device into class II is to provide for the future development of one or more performance standards to assure the safety and effectiveness of the device. This action is being taken under the Medical Device Amendments of 1976.

EFFECTIVE DATE: October 14, 1980.

FOR FURTHER INFORMATION CONTACT: Kaiser Aziz, Bureau of Medical Devices (HFK-440), Food and Drug Administration, 8757 Georgia Ave., Silver Spring, MD 20910, 301-427-7550.

SUPPLEMENTARY INFORMATION: FDA published in the Federal Register of September 11, 1979 (44 FR 52950), a proposed regulation explaining the development of the proposed regulations classifying hematology and pathology devices, the medical device classification procedures, and the activities of the Hematology and Pathology Device Section of the Clinical Chemistry and Hematology Devices Panel (formerly the Hematology Device Classification Panel and the Pathology Device Classification Panel). FDA also published in that issue of the Federal Register (44 FR 53009) a proposed regulation to classify fibrinogen determination systems into class II (performance standards). A period of 60 days was provided for interested persons to submit written comments to FDA.

In the one comment received on the proposal, a manufacturer of a bovine thrombin product stated that its product is used both for fibrinogen determination procedures and for clotting factor assays. The manufacturer was concerned that its product might be subject to two potentially conflicting standards due to the wording of the identification sections of the proposed regulations for fibrinogen determination systems and thrombin time tests, Docket Numbers 78N-1886 and 78N-1904, respectively. The manufacturer requested that the proposed regulations be reworded so as to subject bovine thrombin to a single standard.

FDA does not believe that it is necessary to reword the regulations. If bovine thrombin is offered as a component of a system or as an accessory to a system, then it must meet the performance standard applicable to that system. Therefore, it is conceivable that bovine thrombin will be subject to two standards. The matter of overlapping performance standards will receive careful consideration during the standards development process, so that the resultant standards will not impose an intolerable burden on the manufacturers of these products. Accordingly, the proposed regulation is being adopted without change.

On April, 28, 1976, the agency terminated all of the device classification panels and reestablished them with the same functions, but with new names and with a new structure. FDA published notices of these changes in the Federal Register of May 19, 1978 (43 FR 21666, 21667, and 21668) and May 26, 1978 (43 FR 22672 and 22673). Further information regarding the device advisory committees and a list of their new names may be found in the preamble to the general provisions, published elsewhere in this issue of the Federal Register.

Therefore, under the Federal Food, Drug, and Cosmetic Act (secs. 513, 701(a), 52 Stat. 1055, 90 Stat. 540–546 (21 U.S.C. 360c, 371(a))) and under authority delegated to him (21 CFR 5.1), the Commissioner of Food and Drugs is amending Part 864 in Subpart H by adding new § 864.7340, to read as follows:

§ 864.7340 Fibrinogen determination system.

(a) *Identification.* A fibrinogen determination system is a device that consists of the instruments, reagents, standards, and controls used to determine the fibrinogen levels in disseminated intravascular coagulation (nonlocalized clotting within the blood vessels) and primary fibrinolysis (the dissolution of fibrin in a blood clot).

(b) *Classification.* Class II (performance standards).

Effective date. This regulation shall be effective October 14, 1980.

(Secs. 513, 701(a), 52 Stat. 1055, 90 Stat. 540–546 (21 U.S.C. 360c, 371(a)))

Dated: August 15, 1980.

William F. Randolph,

Acting Associate Commissioner for Regulatory Affairs.

[FR Doc. 80-27348 Filed 9-11-80; 8:45 am]

BILLING CODE 4110-03-M

---

21 CFR Part 864

[Docket No. 78N-1887]

Classification of Erythrocytic Glucose-6-Phosphate Dehydrogenase Assays

AGENCY: Food and Drug Administration

ACTION: Final rule.

SUMMARY: The Food and Drug Administration (FDA) is issuing a final rule classifying erythrocytic glucose-6-phosphate dehydrogenase assays into class II (performance standards). The effect of classifying a device into class II is to provide for the future development of one or more performance standards to assure the safety and effectiveness of the device. This action is being taken under the Medical Device Amendments of 1976.

EFFECTIVE DATE: October 14, 1980.

FOR FURTHER INFORMATION CONTACT: Kaiser Aziz, Bureau of Medical Devices (HFK-440), Food and Drug Administration, 8757 Georgia Ave., Silver Spring, MD 20910, 301-427-7550.

SUPPLEMENTARY INFORMATION: FDA published in the Federal Register of September 11, 1979 (44 FR 52950), a proposed regulation explaining the development of the proposed regulations classifying hematology and pathology devices, the medical device classification procedures, and the activities of the Hematology and Pathology Device Section of the Clinical Chemistry and Hematology Devices Panel (formerly the Hematology Device Classification Panel and the Pathology Device Classification Panel). FDA also published in that issue of the Federal Register (44 FR 53010) a proposed regulation to classify erythrocytic glucose-6-phosphate dehydrogenase assays into class II (performance standards). A period of 60 days was provided for interested persons to submit written comments to FDA.

No comments have been received regarding the proposed regulation to classify this device. Accordingly, the proposed regulation is being adopted without change.

On April 28, 1978, the agency terminated all of the device classification panels and reestablished them with the same functions, but with new names and with a new structure. FDA published notices of these changes in the Federal Register of May 19, 1978 (43 FR 21666, 21667, and 21668) and May 26, 1978 (43 FR 22672 and 22673). Further information regarding the device advisory committees and a list of their new names may be found in the preamble to the general provisions, published elsewhere in this issue of the Federal Register.

Therefore, under the Federal Food, Drug, and Cosmetic Act (secs. 513, 701(a), 52 Stat. 1055, 90 Stat. 540-546 (21 U.S.C. 360c, 371(a))) and under authority delegated to him (21 CFR 5.1), the Commissioner of Food and Drugs is amending Part 864 in Subpart H by adding new § 864.7360, to read as follows:

§ 864.7360 Erythrocytic glucose-6-phosphate dehydrogenase assay.

(a) *Identification.* An erythrocytic glucose-6-phosphate dehydrogenase assay is a device used to measure the activity of the enzyme glucose-6-phosphate dehydrogenase or of glucose-6-phosphate dehydrogenase isoenzymes. The results of this assay are used in the diagnosis and treatment of nonspherocytic congenital hemolytic anemia or drug-induced hemolytic anemia associated with a glucose-6-phosphate dehydrogenase deficiency. This generic device includes assays based on fluorescence, electrophoresis, methemoglobin reduction, catalase inhibition, and utlraviolet kinetics.

(b) *Classification.* Class II (performance standards).

Effective date. This regulation shall be effective October 14, 1980.

(Secs. 513, 701(a), 52 Stat. 1055, 90 Stat. 540-546 (21 U.S.C. 360c, 371(a)))

Dated: August 15, 1980.

William F. Randolph,

Acting Associate Commissioner for Regulatory Affairs.

[FR Doc. 80-27349 Filed 9-11-80; 8:45 am]

BILLING CODE 4110-03-M

---

12 CFR Part 864

[Docket No. 78N-1888]

Classification of Glutathione Reductase Assays

AGENCY: Food and Drug Administration.

ACTION: Final rule.

SUMMARY: The Food and Drug Administration (FDA) is issuing a final rule classifying glutathione reductase assays into class II (performance standards). The effect of classifying a device into class II is to provide for the future development of one or more performance standards to assure the safety and effectiveness of the device. This action is being taken under the Medical Device Amendments of 1976.

EFFECTIVE DATE: October 14, 1980.

FOR FURTHER INFORMATION CONTACT: Kaiser Aziz, Bureau of Medical Devices (HFK-440), Food and Drug Administration, 8757 Georgia Ave., Silver Spring, MD 20910, 301-427-7550.

SUPPLEMENTARY INFORMATION: FDA published in the Federal Register of September 11, 1979 (44 FR 52950), a proposed regulation explaining the development of the proposed regulations classifying hematology and pathology devices, the medical device classification procedures, and the activities of the Hematology and Pathology Device Section of the Clinical Chemistry and Hematology Devices Panel (formerly the Hematology Device Classification Panel and the Pathology Device Classification Panel). FDA also published in that issue of the Federal Register (44 FR 53011) a proposed regulation to glutathione reductase assays into class II (performance standards). A period of 60 days was provided for interested persons to submit written comments to FDA.

No comments have been received regarding the proposed regulation to classify this device. Accordingly, the proposed regulation is being adopted without change.

On April 28, 1978, the agency terminated all of the device classification panels and reestablished them with the same functions, but with new names and with a new structure. FDA published notices of these changes in the Federal Register of May 19, 1978 (43 FR 21666, 21667, and 21668) and May 26, 1978 (43 FR 22672 and 22673). Further information regarding the device advisory committees and a list of their new names may be found in the preamble to the general provisions, published elsewhere in this issue of the Federal Register.

Therefore, under the Federal Food, Drug, and Cosmetic Act (secs. 513, 701(a), 52 Stat. 1055, 90 Stat. 540-540 (21 U.S.C. 360c, 371(a))) and under authority delegated to him (21 CFR 5.1), the Commissioner of Food and Drugs is amending Part 864 in Subpart H by adding new § 864.7375, to read as follows:

§ 864.7375 Glutathione reductase assay.

(a) *Identification.* A glutathione reductase assay is a device used to determine the activity of the enzyme glutathione reductase in serum, plasma, or erythrocytes by such techniques as fluorescence and photometry. The results of this assay are used in the diagnosis of liver disease, glutathione reductase deficiency, or riboflavin deficiency.

(b) *Classification.* Class II (performance standards).

Effective date. This regulation shall be effective October 14, 1980.

(Secs. 513, 701(a), 52 Stat. 1055, 90 Stat. 540-546 (21 U.S.C. 360c, 371(a)))

Dated: August 15, 1980.

William F. Randolph,

Acting Associate Commissioner for Regulatory Affairs.

[FR Doc. 80-27350 Filed 9-11-80; 8:45 am]

BILLING CODE 4110-03-M

---

21 CFR Part 864

[Docket No. 78N-1889]

Classification of Hemoglobin A_2 Assays

AGENCY: Food and Drug Administration.

ACTION: Final rule.

SUMMARY: The Food and Drug Administration (FDA) is issuing a final rule classifying hemoglobin A_2 assays

into class II (performance standards). The effect of classifying a device into class II is to provide for the future development of one or more performance standards to assure the safety and effectiveness of the device. This action is being taken under the Medical Device Amendments of 1976.

EFFECTIVE DATE: October 14, 1980.

FOR FURTHER INFORMATION CONTACT: Kaiser Aziz, Bureau of Medical Devices (HFK-440), Food and Drug Administration, 8757 Georgia Ave., Silver Spring, MD 20910, 301-427-7550.

SUPPLEMENTARY INFORMATION: FDA published in the Federal Register of September 11, 1979 (44 FR 52950), a proposed regulation explaining the development of the proposed regulations classifying hematology and pathology devices, the medical device classification procedures, and the activities of the Hematology and Pathology Device Section of the Clinical Chemistry and Hematology Devices Panel (formerly the Hematology Device Classification Panel and the Pathology Device Classification Panel). FDA also published in that issue of the Federal Register (44 FR 53013) a proposed regulation to classify hemoglobin A_2 assays into class II. A period of 60 days was provided for interested persons to submit written comments to FDA.

The following is a summary of the comments recieved on the proposal and the agency's response to them:

1. A manufacturer suggested that its electrophoresis equipment and kits might be subject to three potentially conflicting performance standards due to the language in the proposed regulations for hemoglobin A_2 assays (44 FR 53013), abnormal hemoglobin assays (44 FR 53014), and electrophoretic hemoglobin analysis systems (44 FR 53016). The manufacturer suggested that compliance with three different, and possibly conflicting, standards would be an immense regulatory burden with no benefit to the patient. The comment requested that the language in the proposed rules be modified so that its products and similar products are subject to a single regulation.

FDA agrees that electrophoresis equipment and kits could be subject to three performance standards. FDA believes that a product sold to perform a specific assay should be required to meet any performance standards applicable to that assay. Because the standards will all apply to electrophoresis procedures, FDA believes that the differences will be minor. The matter of overlapping performance standards will recieve careful consideration during the standards development process, so that the resultant standards will not impose an intolerable burden on the manufacturers of the devices.

2. One comment suggested that class II is appropriate for electrophoresis control materials, but that all other electrophoresis materials and equipment be placed into class I. The comment suggested that class I is appropriate because electrophoresis materials and equipment have worked well in the past. Because there is no direct patient contact, there is no possibility of immediate harm to the patient. The use of control materials will detect minor difficulties and nearly eliminate the risk of misdiagnose. Because many of the abnormal hemoglobins sought to be detected are genetic in origin, a minor error will not result in drastic or immediate changes in treatment, therefore minimizing the risk to the patient's health. The comment also argues that is a standard is developed for control materials, any difficulties with equipment or materials could be easily detected or corrected. The comment also stated that there are so many variations in procedure that development of a standard would be nearly impossible and would be an inappropriate form of regulation of electrophoresis equipment and materials.

FDA disagrees with this comment. These assays were proposed for classification into class II because FDA and the Panel recognized the need to establish acceptable ranges for the performance characteristics of these assays. FDA believes that the general controls under class I will not assume the establishment of acceptable performance ranges. FDA believes that these standards should address control materials as well as the other equipment and materials. System features such as pH, electrolytes employed, support media, voltage, staining material, and duration of electophoresis must be addressed in a performance standard. The potential for patient harm is in misdiagonosis or the failure to detect a hemoglobin disorder and subsequent inappropriate therapy or failure to institute therapy. A serious hemoglobin disorder, whether genetic in origin or not, may require drastic or immeidate measures in treatment in order to prevent harm to the patient. FDA agrees that there are variations in procedure, but these differences should not preclude the development of standards.

Accordingly, the proposed rule is being adopted without change.

On April 28, 1978, the agency terminated all of the device classification panels and reestablished them with the same functions, but with new names and with a new structure. FDA published notices of these changes in the Federal Register of May 19, 1978 (43 FR 21666, 21667, and 21668) and May 26, 1978 (43 FR 22672 and 22673). Further information regarding the device advisory committees and a list of their new names may be found in the preamble to the general provisions, published elsewhere in this issue of the Federal Register.

Therefore, under the Federal Food, Drug, and Cosmetic Act (secs. 513, 701(a), 52 Stat. 1055, 90 Stat. 540-546 (21 U.S.C. 360c, 371(a))) and under authority delegated to him (21 CFR 5.1), the Commissioner of Food and Drugs is amending Part 864 in Subpart H by adding new § 864.7400, to read as follows:

§ 864.7400 Hemoglobin A_2 assay.

(a) *Identification.* A hemoglobin A_2 assay is a device used to determine the hemoglobin A_2 content of human blood. The measurement of hemoglobin A_2 is used in the diagnosis of the thalassemias (hereditary hemolytic anemias characterized by decreased synthesis of one or more types of hemoglobin polypeptide chains).

(b) *Classification.* Class II (performance standards).

Effective date. This regulation shall be effective October 14, 1980.

(Secs. 513, 701(a), 52 Stat. 1055, 90 Stat. 540-546 (21 U.S.C. 360c, 371(a)))

Dated: August 15, 1980.

William F. Randolph,

Acting Associate Commissioner for Regulatory Affairs.

[FR Doc. 80-27351 Filed 9-11-80; 8:45 am]

BILLING CODE 4110-03-M

---

21 CFR Part 864

[Docket No. 78N-1890]

Classification of Abnormal Hemoglobin Assays

AGENCY: Food and Drug Administration.

ACTION: Final rule.

SUMMARY: The Food and Drug Administration (FDA) is issuing a final rule classifying abnormal hemoglobin assays into class II (performance standards). The effect of classifying a device into class II is to provide for the future development of one or more performance standards to assure the safety and effectiveness of the device. This action is being taken under the Medical Device Amendments of 1976.

EFFECTIVE DATE: October 14, 1980.

FOR FURTHER INFORMATION CONTACT: Kaiser Aziz, Bureau of Medical Devices

(HFK-440), Food and Drug Administration, 8757 Georgia Ave., Silver Spring, MD 20910, 301-427-7550.

SUPPLEMENTARY INFORMATION: FDA published in the Federal Register of September 11, 1979 (44 FR 52950), a proposed regulation explaining the development of the proposed regulations classifying hematology and pathology devices, the medical device classification procedures, and the activities of the Hematology and Pathology Device Section of the Clinical Chemistry and Hematology Devices Panel (formerly the Hematology Device Classification Panel and the Pathology Device Classification Panel). FDA also published in that issue of the Federal Register (44 FR 53014) a proposed regulation to classify abnormal hemoglobin assays into class II (performance standards). A period of 60 days was provided for interested persons to submit written comments to FDA.

The following is a summary of the comments received on the proposal and the agency's response to them:

1. A manufacturer suggested that its electrophoresis equipment and kits might be subject to three potentially conflicting performance standards due to the language in the proposed regulations for hemoglobin A_2 assays (44 FR 53013), abnormal hemoglobin assays (44 FR 53014), and electrophoretic hemoglobin analysis systems (44 FR 53016). The manufacturer suggested that compliance with three different, and possibly conflicting, standards would be an immense regulatory burden with no benefit to the patient. The comment requested that the language in the proposed rules be modified so that its products and similar products are subject to a single regulation.

FDA agrees that electrophoresis equipment and kits could be subject to three performance standards. FDA believes that a product sold to perform a specific assay should be required to meet any performance standards applicable to that assay. Because the standards will all apply to electrophoresis procedures, FDA believes that the differences will be minor. The matter of overlapping performance standards will receive careful consideration during the standards development process, so that the resultant standards will not impose an intolerable burden on the manufacturers of the devices.

2. One comment suggested that class II is appropriate for electrophoresis control materials, but that all other electrophoresis materials and equipment be placed into class I. The comment suggests that class I is appropriate because electrophoresis materials and equipment have worked well in the past. Because there is no direct patient contact, there is no possibility of immediate harm to the patient. The use of control materials will detect minor difficulties and nearly eliminate the risk of misdiagnosis. Because many of the abnormal hemoglobins sought to be detected are genetic in origin, a minor error will not result in drastic or immediate changes in treatment, therefore minimizing the risk to the patient's health. The comment also argued that if a standard is developed for control materials, any difficulties with equipment or materials could be easily detected or corrected. The comment also states that there are so many variations in procedure that development of a standard would be nearly impossible and would be an inappropriate form of regulation of electrophoresis equipment and materials.

FDA disagrees with this comment. These assays were proposed for classification into class II because FDA and the Panel recognized the need to establish acceptable ranges for the performance characteristics of these assays. FDA believes that the general controls under class I will not establish acceptable performance ranges. FDA believes that these standards should address control materials as well as the other equipment and materials. System features such as pH, electrolytes employed, support media, voltage, staining material, and duration of electrophoresis must be addressed in a performance standard. The potential for patient harm is in misdiagnosis or the failure to detect a hemoglobin disorder and subsequent inappropriate therapy or failure to institute therapy. A serious hemoglobin disorder, whether genetic in origin or not, may very well require drastic or immediate measures in treatment in order to prevent harm to the patient. FDA agrees that there are variations in procedure, but these differences should not preclude the development of standards.

Accordingly, the proposed rule is being adopted without change.

On April 28, 1978, the agency terminated all of the device classification panels and reestablished them with the same functions, but with new names and with a new structure. FDA published notices of these changes in the Federal Register of May 19, 1978 (43 FR 21666, 21667, and 21668) and May 26, 1978 (43 FR 22672 and 22673). Further information regarding the device advisory committees and a list of their new names may be found in the preamble to the general provisions, published elsewhere in this issue of the Federal Register.

Therefore, under the Federal Food, Drug, and Cosmetic Act (secs. 513, 701(a), 52 Stat. 1055, 90 Stat. 540-546 (21 U.S.C. 360c, 371(a))) and under authority delegated to him (21 CFR 5.1), the Commissioner of Food and Drugs is amending Part 864 in Subpart H by adding new § 864.7415, to read as follows:

§ 864.7415 Abnormal hemoglobin assay.

(a) *Identification.* An abnormal hemoglobin assay is a device consisting of the reagents, apparatus, instrumentation, and controls necessary to isolate and identify abnormal genetically determined hemoglobin types.

(b) *Classification.* Class II (performance standards).

Effective date. This regulation shall be effective October 14, 1980.

(Secs. 513, 701(a), 52 Stat. 1055, 90 Stat. 540-546 (21 U.S.C. 360c, 371(a)))

Dated: August 15, 1980.

William F. Randolph,

Acting Associate Commissioner for Regulatory Affairs.

[FR Doc. 80-27352 Filed 9-11-80; 8:45 am]

BILLING CODE 4110-03-M

---

21 CFR Part 864

[Docket No. 78N-1891]

Classification of Carboxyhemoglobin Assays

AGENCY: Food and Drug Administration.

ACTION: Final rule.

SUMMARY: The Food and Drug Administration (FDA) is issuing a final rule classifying carboxyhemoglobin assays into class II (performance standards). The effect of classifying a device into class II is to provide for the future development of one or more performance standards to assure the safety and effectiveness of the device. This action is being taken under the Medical Device Amendments of 1976.

EFFECTIVE DATE: October 14, 1980.

FOR FURTHER INFORMATION CONTACT: Kaiser Aziz, Bureau of Medical Devices (HFK-440), Food and Drug Administration, 8757 Georgia Ave., Silver Spring, MD 20910, 301-427-7550.

SUPPLEMENTARY INFORMATION: FDA published in the Federal Register of September 11, 1979 (44 FR 52950), a proposed regulation explaining the development of the proposed regulations

classifying hematology and pathology devices, the medical device classification procedures, and the activities of the Hematology and Pathology Device Section of the Clinical Chemistry and Hematology Devices Panel (formerly the Hematology Device Classification Panel and the Pathology Device Classification Panel). FDA also published in that issue of the Federal Register (44 FR 53015) a proposed regulation to classify carboxyhemoglobin assays into class II (performance standards). A period of 60 days was provided for interested persons to submit written comments to FDA.

No comments have been received regarding the proposed regulation to classify this device. Accordingly, the proposed regulation is being adopted without change.

On April 28, 1978, the agency terminated all of the device classification panels and reestablished them with the same functions, but with new names and with a new structure. FDA published notices of these changes in the Federal Register of May 19, 1978 (43 FR 21666, 21667, and 21668) and May 26, 1978 (43 FR 22672 and 22673). Further information regarding the device advisory committees and a list of their new names may be found in the preamble to the general provisions, published elsewhere in this issue of the Federal Register.

Therefore, under the Federal Food, Drug, and Cosmetic Act (secs. 513, 701(a), 52 Stat. 1055, 90 Stat. 540–546 (21 U.S.C. 360c, 371(a))) and under authority delegated to him (21 CFR 5.1), the Commissioner of Food and Drugs is amending Part 864 in Subpart H by adding new § 864.7425, to read as follows:

§ 864.7425 Carboxyhemoglobin assay.

(a) *Identification.* A carboxyhemoglobin assay is a device used to determine the carboxyhemoglobin (the compound formed when hemoglobin is exposed to carbon monoxide) content of human blood as an aid in the diagnosis of carbon monoxide poisoning. This measurement may be made using methods such as spectroscopy, colorimetry, spectrophotometry, and gasometry.

(b) *Classification.* Class II (performance standards).

Effective date. This regulation shall be effective October 14, 1980.

(Secs. 513, 701(a), 52 Stat. 1055, 90 Stat. 540–546 (21 U.S.C. 360c, 371(a)))

Dated: August 15, 1980.

William F. Randolph,

Acting Associate Commissioner for Regulatory Affairs.

[FR Doc. 80-27353 Filed 9-11-80; 8:45 am]

BILLING CODE 4110-03-M

---

21 CFR Part 864

[Docket No. 78N-1892]

Classification of Electrophoretic Hemoglobin Analysis Systems

AGENCY: Food and Drug Administration.

ACTION: Final rule.

SUMMARY: The Food and Drug Administration (FDA) is issuing a final rule classifying electrophoretic hemoglobin analysis systems into class II (performance standards). The effect of classifying a device into class II is to provide for the future development of one or more performance standards to assure the safety and effectiveness of the device. This action is being taken under the Medical Device Amendments of 1976.

EFFECTIVE DATE: October 14, 1980.

FOR FURTHER INFORMATION CONTACT: Kaiser Aziz, Bureau of Medical Devices (HFK-440), Food and Drug Administration, 8757 Georgia Ave., Silver Spring, MD 20910, 301-427-7550.

SUPPLEMENTARY INFORMATION: FDA published in the Federal Register of September 11, 1979 (44 FR 52950), a proposed regulation explaining the development of the proposed regulations classifying hematology and pathology devices, the medical device classification procedures, and the activities of the Hematology and Pathology Device Section of the Clinical Chemistry and Hematology Devices Panel (formerly the Hematology Device Classification Panel and the Pathology Device Classification Panel). FDA also published in that issue of the Federal Register (44 FR 53016) a proposed regulation to classify electrophoretic hemoglobin analysis systems into class II (performance standards). A period of 60 days was provided for interested persons to submit written comments to FDA.

The following is a summary of the comments received on the proposal and the agency's response to them:

1. A manufacturer suggested that its electrophoresis equipment and kits might be subject to three potentially conflicting performance standards due to the language in the proposed regulations for hemoglobin A_2 assays (44 FR 53013), abnormal hemoglobin assays (44 FR 53014), and electrophoretic hemoglobin analysis systems (44 FR 43016). The manufacturer suggested that compliance with three different and possibly conflicting standards would be an immense regulatory burden with no benefit to the patient. The comment requested that the language in the proposed rules be modified so that its products and similar products are subject to a single regulation.

FDA agrees that electrophoresis equipment and kits could be subject to three performance standards. FDA believes that a product sold to perform a specific assay should be required to meet any performance standards applicable to that assay. Because the standards will all apply to electrophoresis procedures, FDA believes that the differences will be minor. The matter of overlapping performance standards will receive careful consideration during the standards development process, so that the resultant standards will not impose an intolerable burden on the manufacturers of the devices.

2. One comment suggested that class II is appropriate for electrophoresis control materials, but that all other electrophoresis materials and equipment be placed into class I. The comment suggests that class I is appropriate because electrophoresis materials and equipment have worked well in the past. Because there is no direct patient contact, there is no possibility of immediate harm to the patient. The use of control materials will detect minor difficulties and nearly eliminate the risk of misdiagnosis. Because many of the abnormal hemoglobins sought to be detected are genetic in origin, a minor error will not result in drastic or immediate changes in treatment, therefore minimizing the risk to the patient's health. The comment also argued that if a standard is developed for control materials, any difficulties with equipment or materials could be easily detected or corrected. The comment also states that there are so many variations in procedure that development of a standard would be nearly impossible and would be an inappropriate form of regulation of electrophoresis equipment and materials.

FDA disagrees with this comment. These assays were proposed for classification into class II because FDA and the Panel recognized the need to establish acceptable ranges for the performance characteristics of these assays. FDA believes that the general controls of class I will not establish acceptable performances ranges. FDA believes that these standards should

address control materials as well as the other equipment and materials. System features such as pH, electrolytes employed, support media, voltage, staining material, and duration of electrophoresis must be addressed in a performance standard. The potential for patient harm is in misdiagnosis or the failure to detect a hemoglobin disorder and subsequent inappropriate therapy or failure to institute therapy. A serious hemoglobin disorder, whether genetic in origin or not, may very well require drastic or immediate measures in treatment in order to prevent harm to the patient. FDA agrees that there are variations in procedure, but these differences should not preclude the development of standards.

Accordingly, the proposed rule is being adopted without change.

On April 28, 1978, the agency terminated all of the device classification panels and reestablished them with the same functions, but with new names and with a new structure. FDA published notices of these changes in the Federal Register of May 19, 1978 (43 FR 21666, 21667, and 21668) and May 26, 1978 (43 FR 22672 and 22673). Further information regarding the device advisory committees and a list of their new names may be found in the preamble to the general provisions, published elsewhere in this issue of the Federal Register.

Therefore, under the Federal Food, Drug, and Cosmetic Act (secs. 513, 701(a), 52 Stat. 1055, 90 Stat. 540–546 (21 U.S.C. 360c, 371(a))) and under authority delegated to him (21 CFR 5.1), the Commissioner of Food and Drugs is amending Part 864 in Subpart H by adding new § 864.7440, to read as follows:

§ 864.7440 Electrophoretic hemoglobin analysis system.

(a) *Identification.* An electrophoretic hemoglobin analysis system is a device that electrophoretically separates and identifies normal and abnormal hemoglobin types as an aid in the diagnosis of anemia or erythrocytosis (increased total red cell mass) due to a hemoglobin abnormality.

(b) *Classification.* Class II (performance standards).

Effective date. This regulation shall be effective October 14, 1980.

(Secs. 513, 701(a), 52 Stat. 1055, 90 Stat. 540–546 (21 U.S.C. 360c, 371(a)))

Dated: August 15, 1980.

William F. Randolph,

Acting Associate Commissioner for Regulatory Affairs.

[FR Doc. 80-27354 Filed 9-11-80; 8:45 am]

BILLING CODE 4110-03-M

---

21 CFR Part 864

[Docket No. 78N-1893]

Classification of Fetal Hemoglobin Assays

AGENCY: Food and Drug Administration.

ACTION: Final rule.

SUMMARY: The Food and Drug Administration (FDA) is issuing a final rule classifying fetal hemoglobin assays into class II (performance standards). The effect of classifying a device into class II is to provide for the future development of one or more performance standards to assure the safety and effectiveness of the device. This action is being taken under the Medical Device Amendments of 1976.

EFFECTIVE DATE: October 14, 1980.

FOR FURTHER INFORMATION CONTACT: Kaiser Aziz, Bureau of Medical Devices (HFK–440), Food and Drug Administration, 8757 Georgia Ave., Silver Spring, MD 20910, 301–427–7550.

SUPPLEMENTARY INFORMATION: FDA published in the Federal Register of September 11, 1979 (44 FR 52950), a proposed regulation explaining the development of the proposed regulations classifying hematology and pathology devices, the medical device classification procedures, and the activities of the Hematology and Pathology Device Section of the Clinical Chemistry and Hematology Devices Panel (formerly the Hematology Device Classification Panel and the Pathology Device Classification Panel). FDA also published in that issue of the Federal Register (44 FR 53017) a proposed regulation to classify fetal hemoglobin assays into class II (performance standards). A period of 60 days was provided for interested persons to submit written comments to FDA.

No comments have been received regarding the proposed regulation to classify this device. Accordingly, the proposed regulation is being adopted without change.

On April 28, 1978, the agency terminated all of the device classification panels and reestablished them with the same functions, but with new names and with a new structure. FDA published notices of these changes in the Federal Register of May 19, 1978 (43 FR 21666, 21667, and 21668) and May 26, 1978 (43 FR 22672 and 22673). Further information regarding the device advisory committees and a list of their new names may be found in the preamble to the general provisions, published elsewhere in this issue of the Federal Register.

Therefore, under the Federal Food, Drug, and Cosmetic Act (secs. 513, 701(a), 52 Stat. 1055, 90 Stat. 540–546 (21 U.S.C. 360c, 371(a))) and under authority delegated to him (21 CFR 5.1), the Commissioner of Food and Drugs is amending Part 864 in Subpart H by adding new § 864.7455, to read as follows:

§ 864.7455 Fetal hemoglobin assay.

(a) *Identification.* A fetal hemoglobin assay is a device that is used to determine the presence and distribution of fetal hemoglobin (hemoglobin F) in red cells or to measure the amount of fetal hemoglobin present. The assay may be used to detect fetal red cells in the maternal circulation or to detect the elevated levels of fetal hemoglobin exhibited in cases of hemoglobin abnormalities such as thalassemia (a hereditary hemolytic anemia characterized by a decreased synthesis of one or more types of hemoglobin polypeptide chains). The hemoglobin determination may be made by methods such as electrophoresis, alkali denaturation, column chromatography, or radial immunodiffusion.

(b) *Classification.* Class II (performance standards).

Effective date. This regulation shall be effective October 14, 1980.

(Secs. 513, 701(a), 52 Stat. 1055, 90 Stat. 540–546 (21 U.S.C. 360c, 371(a)))

Dated: August 15, 1980.

William F. Randolph,

Acting Associate Commissioner for Regulatory Affairs.

[FR Doc. 80-27355 Filed 9-11-80; 8:45 am]

BILLING CODE 4110-03-M

---

21 CFR Part 864

[Docket No. 78P-0155]

Classification of Glycosylated Hemoglobin Assays

AGENCY: Food and Drug Administration.

ACTION: Final rule.

SUMMARY: The Food and Drug Administration (FDA) is issuing a final rule to codify its 1978 order reclassifying glycosylated hemoglobin assays from class III (premarket approval) into class II (performance standards). FDA issued the order after receiving a manufacturer's reclassification petition and publishing for comment the

recommendation of an FDA advisory committee. The effect of classifying a device into class II is to provide for the future development of one or more performance standards to assure the safety and effectiveness of the device. This action is being taken under the Medical Device Amendments of 1976.

EFFECTIVE DATE: October 14, 1980.

FOR FURTHER INFORMATION CONTACT: Kaiser Aziz, Bureau of Medical Devices (HFK-440), Food and Drug Administration, 8757 Georgia Ave., Silver Spring, MD 20910, 301-427-7550.

SUPPLEMENTARY INFORMATION: Section 513(f) of the Federal Food, Drug, and Cosmetic Act (21 U.S.C. 360c(f)) classifies into class III (premarket approval) a device that is first offered for commerical distribution after enactment of the Medical Device Amendments and that is not substantially equivalent to a preamendments device. On February 21, 1978, Helena Laboratories, Beaumont, Texas 77704, submitted to FDA a petition for reclassification of a column chromatographic procedure that it intended to market for the measurement of the glycosylated hemoglobins, a device reclassified into class III pursuant to section 513(f). FDA reviewed the petition and requested additional data. On May 24, 1978, the manufacturer submitted the requested data as a supplement to the petition. The agency mailed copies of the petition to voting members of the Hematology and Pathology Device Section of the Clinical Chemistry and Hematology Devices Panel and asked the members to mail their recommendations to FDA. By August 31, 1978, all the members had responded. The Panel recommended that the device be reclassified into class II.

FDA published a notice of the Panel recommendation in the Federal Register of September 26, 1978 (43 FR 43555), and provided a period of 30 days for interested persons to submit written comments to FDA.

FDA received no comments on the recommendation. Because FDA agreed with the Panel recommendation, FDA granted the petition and reclassified the device into class II by order in the form of a letter to the sponsor dated November 6, 1978.

This regulation codifies the 1979 order. The order and regulation apply to any device that is substantially equivalent to the reclassified device. FDA determines substantial equivalence by reviewing premarket notification submissions under section 510(k) of the act (21 U.S.C. 360(k)) and Subpart E of Part 807 of the regulations (21 CFR Part 807, Subpart E).

On April 28, 1978, the agency terminated all of the device classification panels and reestablished them with the same functions, but with new names and with a new structure. FDA published notices of these changes in the Federal Register of May 19, 1978 (43 FR 21666, 21667, and 21668) and May 26, 1978 (43 FR 22672 and 22673). Further information regarding the device advisory committees and a list of their new names may be found in the preamble to the general provisions, published elsewhere in this issue of the Federal Register.

Therefore, under the Federal Food, Drug, and Cosmetic Act (secs. 513, 701(a), 52 Stat. 1055, 90 Stat. 540-546 (21 U.S.C. 360c, 371(a))) and under authority delegated to him (21 CFR 5.1), the Commissioner of Food and Drugs is amending Part 864 in Subpart H by adding new § 864.7470, to read as follows:

§ 864.7470 Glycosylated hemoglobin assay.

(a) *Identification.* A glycosylated hemoglobin assay is a device used to measure the glycosylated hemoglobins (A_{1a}, A_{1b}, and A_{1c}) in a patient's blood by a column chromatographic procedure. Measurement of glycosylated hemoglobin is used to assess the level of control of a patient's diabetes and to determine the proper insulin dosage for a patient. Elevated levels of glycosylated hemoglobin indicate uncontrolled diabetes in a patient.

(b) *Classification.* Class II (performance standards).

Effective date. This regulation shall be effective October 14, 1980.

(Secs. 513, 701(a), 52 Stat. 1055, 90 Stat. 540-546 (21 U.S.C. 360c, 371(a)))

Dated: August 15, 1980.

William F. Randolph,

Acting Associate Commissioner for Regulatory Affairs.

[FR Doc. 80-27356 Filed 9-11-80; 8:45 am]
BILLING CODE 4110-03-M

---

21 CFR Part 864

[Docket No. 78N-1895]

Classification of Sulfhemoglobin Assays

AGENCY: Food and Drug Administration.

ACTION: Final rule.

SUMMARY: The Food and Drug Administration (FDA) is issuing a final rule classifying sulfhemoglobin assays into Class II (performance standards). The effect of classifying a device into class II is to provide for the future development of one or more performance standards to assure the safety and effectiveness of the device. This action is being taken under the Medical Device Amendments of 1976.

EFFECTIVE DATE: October 14, 1980.

FOR FURTHER INFORMATION CONTACT: Kaiser Aziz, Bureau of Medical Devices (HFK-440), Food and Drug Administration, 8757 Georgia Ave., Silver Spring, MD 20910, 301-427-7550.

SUPPLEMENTARY INFORMATION: FDA published in the Federal Register of September 11, 1979 (44 FR 52950), a proposed regulation explaining the development of the proposed regulations classifying hematology and pathology devices, the medical device classification procedures, and the activities of the Hematology and Pathology Device Section of the Clinical Chemistry and Hematology Devices Panel (formerly the Hematology Device Classification Panel and the Pathology Device Classification Panel). FDA also published in that issue of the Federal Register (44 FR 53018) a proposed regulation to classify sulfhemoglobin assays into class II (performance standards). A period of 60 days was provided for interested persons to submit written comments to FDA.

No comments have been received regarding the proposed regulation to classify this device. Accordingly, the proposed regulation is being adopted without change.

On April 28, 1978, the agency terminated all of the device classification panels and reestablished them with the same functions, but with new names and with a new structure. FDA published notices of these changes in the Federal Register of May 19, 1978 (43 FR 21666, 21667, and 21668) and May 26, 1978 (43 FR 22672 and 22673). Further information regarding the device advisory committees and a list of their new names may be found in the preamble to the general provisions, published elsewhere in this issue of the Federal Register.

Therefore, under the Federal Food, Drug, and Cosmetic Act (secs. 513, 701(a), 52 Stat. 1055, 90 Stat. 540-546 (21 U.S.C. 360c, 371(a))) and under authority delegated to him (21 CFR 5.1), the Commissioner of Food and Drugs is amending Part 864 in Subpart H by adding new § 864.7490, to read as follows:

§ 864.7490 Sulfhemoglobin assay.

(a) *Identification.* A sulfhemoglobin assay is a device consisting of the reagents, calibrators, controls, and instrumentation used to determine the

sulfhemoglobin (a compound of sulfur and hemoglobin) content of human blood as an aid in the diagnosis of sulfhemoglobinemia (presence of sulfhemoglobin in the blood due to drug administration or exposure to a poison). This measurement may be made using methods such as spectroscopy, colorimetry, spectrophotometry, or gasometry.

(b) *Classification.* Class II (performance standards).

Effective date. This regulation shall be effective October 14, 1980.

(Secs. 513, 701(a), 52 Stat. 1055, 90 Stat. 540-546 (21 U.S.C. 360c, 371(a)))

Dated: August 15, 1980.

William F. Randolph,

Acting Associate Commissioner for Regulatory Affairs.

[FR Doc. 80-27357 Filed 9-11-80; 8:45 am]

BILLING CODE 4110-03-M

---

12 CFR Part 864

[Docket No. 78N-1896]

Classification of Whole Blood Hemoglobin Assays

AGENCY: Food and Drug Administration.

ACTION: Final rule.

SUMMARY: The Food and Drug Administration (FDA) is issuing a final rule classifying whole blood hemoglobin assays into class II (performance standards). The effect of classifying a device into class II is to provide for the future development of one or more performance standards to assure the safety and effectiveness of the device. This action is being taken under the Medical Device Amendments of 1976.

EFFECTIVE DATE: October 14, 1980.

FOR FURTHER INFORMATION CONTACT: Kaiser Aziz, Bureau of Medical Devices (HFK-440), Food and Drug Administration, 8757 Georgia Ave., Silver Spring, MD 20910, 301-427-7550.

SUPPLEMENTARY INFORMATION: FDA published in the Federal Register of September 11, 1979 (44 FR 52950), a proposed regulation explaining the development of the proposed regulations classifying hematology and pathology devices, the medical device classification procedures, and the activities of the Hematology and Pathology Device Section of the Clinical Chemistry and Hematology Devices Panel (formerly the Hematology Device Classification Panel and the Pathology Device Classification Panel). FDA also published in that issue of the Federal Register (44 FR 53019) a proposed regulation to classify whole blood hemoglobin assays into class II (performance standards). A period of 60 days was provided for interested persons to submit written comments to FDA.

The following is a summary of the comments received on the proposal and the agency's response to them:

1. One comment suggested that including the purpose of the assay is not necessary to identify the device.

FDA disagrees with this comment. Examples of the diagnostic uses of products have been included because FDA believes that by doing so it has provided a more complete identification of the diagnostic product.

2. One manufacturer suggested that due to the language in the proposed regulations for automated hemoglobin system (44 FR 52983) and whole blood hemoglobin assays (44 FR 53019), its automated hemoglobin system would be subject to two potentially conflicting performance standards. The comment noted that the language in the proposed regulation for automated hemoglobin systems appears to encompass all the devices described in the proposed regulation for whole blood hemoglobin assays. The comment requested that the language be modified so that this system is subject to a single rule.

FDA agrees with this comment. The identification section of the regulation for automated hemoglobin systems has been modified so that the regulation applies only to automated systems. That regulation is published elsewhere in this issue of the Federal Register. The identification section of this regulation has been modified to exclude automated assays.

3. FDA also received one comment supporting the proposed classification into class II and suggesting that the slit width of the colorimeter or spectrophotometer used in these assays be specified in any standards developed.

FDA will consider addressing this matter when a standard for the device is developed.

Accordingly, the regulation has been modified to include the changes noted.

On April 28, 1978, the agency terminated all of the device classification panels and reestablished them with the same functions, but with new names and with a new structure. FDA published notices of these changes in the Federal Register of May 19, 1978 (43 FR 21666, 21667, and 21668) and May 26, 1978 (43 FR 22672 and 22673). Further information regarding the device advisory committees and a list of their new names may be found in the preamble to the general provisions, published elsewhere in this issue of the Federal Register.

Therefore, under the Federal Food, Drug, and Cosmetic Act (secs. 513, 701(a), 52 Stat. 1055, 90 Stat. 540-546 (21 U.S.C. 360c, 371(a))) and under authority delegated to him (21 CFR 5.1), the Commissioner of Food and Drugs is amending Part 864 in Subpart H by adding new § 864.7500, to read as follows:

§ 864.7500 Whole blood hemoglobin assays.

(a) *Identification.* A whole blood hemoglobin assay is a device consisting or reagents, calibrators, controls, or photometric or spectrophotometric instrumentation used to measure the hemoglobin content of whole blood for the detection of anemia. This generic device category does not include automated hemoglobin systems.

(b) *Classification.* Class II (performance standards).

Effective date. This regulation shall be effective October 14, 1980.

(Secs. 513, 701(a), 52 Stat. 1055, 90 Stat. 540-546 (21 U.S.C. 360c, 371(a)))

Dated: August 15, 1980.

William F. Randolph,

Acting Associate Commissioner for Regulatory Affairs.

[FR Doc. 80-27358 Filed 9-11-80; 8:45 am]

BILLING CODE 4110-03-M

---

21 CFR Part 864

[Docket No. 78N-1897]

Classification of Heparin Assays

AGENCY: Food and Drug Administration.

ACTION: Final rule.

SUMMARY: The Food and Drug Administration (FDA) is issuing a final rule classifying heparin assays into class II (performance standards). The effect of classifying a device into class II is to provide for the future development of one or more performance standards to assure the safety and effectiveness of the device. This action is being taken under the Medical Device Amendments of 1976.

EFFECTIVE DATE: October 14, 1980.

FOR FURTHER INFORMATION CONTACT: Kaiser Aziz, Bureau of Medical Devices (HFK-440), Food and Drug Administration, 8757 Georgia Ave., Silver Spring, MD 20910, 301-427-7550.

SUPPLEMENTARY INFORMATION: FDA published in the Federal Register of September 11, 1979 (44 FR 52950), a proposed regulation explaining the development of the proposed regulations classifying hematology and pathology devices, the medical device classification procedures, and the

activities of the Hematology and Pathology Device Section of the Clinical Chemistry and Hematology Devices Panel (formerly the Hematology Device Classification Panel and the Pathology Device Classification Panel). FDA also published in that issue of the Federal Register (44 FR 53020) a proposed regulation to classify heparin assays into class II (performance standards). A period of 60 days was provided for interested persons to submit written comments to FDA.

No comments have been received regarding the proposed regulation to classify this device. Accordingly, the proposed regulation is being adopted without change.

On April 28, 1978, the agency terminated all of the device classification panels and reestablished them with the same functions, but with new names and with a new structure. FDA published notices of these changes in the Federal Register of May 19, 1978 (43 FR 21666, 21667, and 21668) and May 26, 1978 (43 FR 22672 and 22673). Further information regarding the device advisory committees and a list of their new names may be found in the preamble to the general provisions, published elsewhere in this issue of the Federal Register.

Therefore, under the Federal Food, Drug, and Cosmetic Act (secs. 513, 701(a), 52 Stat. 1055, 90 Stat. 540–546 (21 U.S.C. 360c, 371(a))) and under authority delegated to him (21 CFR 5.1), the Commissioner of Food and Drugs is amending Part 864 in Subpart H by adding new § 864.7525, to read as follows:

§ 864.7525 Heparin assay.

(a) *Identification.* A heparin assay is a device used to determine the level of the anticoagulant heparin in the patient's circulation. These assays are quantitative clotting time procedures using the effect of heparin on activated coagulation factor X (Stuart factor) or procedures based on the neutralization of heparin by protamine sulfate (a protein that neutralizes heparin).

(b) *Classification.* Class II (performance standards).

Effective date. This regulation shall be effective October 14, 1980.

(Secs. 513, 701(a), 52 Stat. 1055, 90 Stat. 540–546 (21 U.S.C. 360c, 371(a)))

Dated: August 15, 1980.

William F. Randolph,

Acting Associate Commissioner for Regulatory Affairs.

[FR Doc. 80-27359 Filed 9-11-80; 8:45 am]

BILLING CODE 4110-03-M

21 CFR Part 864

[Docket No. 78N-1898]

Classification of Leukocyte Alkaline Phosphatase Tests

AGENCY: Food and Drug Administration.

ACTION: Final rule.

SUMMARY: The Food and Drug Administration (FDA) is issuing a final rule classifying leukocyte alkaline phosphatase tests into class I (general controls). The effect of classifying a device into class I is to require that the device meet only the general controls applicable to all devices. This action is being taken under the Medical Device Amendments of 1976.

EFFECTIVE DATE: October 14, 1980.

FOR FURTHER INFORMATION CONTACT: Kaiser Aziz, Bureau of Medical Devices (HFK-440), Food and Drug Administration, 8757 Georgia Ave., Silver Spring, MD 20910, 301-427-7550.

SUPPLEMENTARY INFORMATION: FDA published in the Federal Register of September 11, 1979 (44 FR 52950), a proposed regulation explaining the development of the proposed regulations classifying hematology and pathology devices, the medical device classification procedures, and the activities of the Hematology and Pathology Device Section of the Clinical Chemistry and Hematology Devices Panel (formerly the Hematology Device Classification Panel and the Pathology Device Classification Panel). FDA also published in that issue of the Federal Register (44 FR 53021) a proposed regulation to classify leukocyte alkaline phosphatase tests into class I (general controls). A period of 60 days was provided for interested persons to submit written comments to FDA.

The one comment received on the proposal disagreed with the proposed classification of the leukocyte alkaline phosphatase test into class I. The comment noted that an error in the test may result in failure to diagnose leukemia or the labeling of normal cells as leukemic. The comment cited the Panel's contention that stains are hard to standardize, vary from lot-to-lot, and 10 to 25 percent of stain lots are unusable. Because proper functioning of this test is so important to the patient's health, a performance standard is essential to provide a reasonable assurance of safety and effectiveness. Therefore, the comment recommended that these tests be placed into class II.

FDA disagrees with the comment and is classifying these tests into class I as proposed.

On November 19, 1979, FDA held a public meeting of the Hematology Devices Section of the Clinical Chemistry and Hematology Devices Panel. At the meeting, a representative of the Health Research Group (HRG) presented HRG's view that leukocyte alkaline phosphatase tests should be classified into class II rather than class I as proposed.

After considering the comment, the testimony, and the Section's recommendation to classify the device into class I as proposed, FDA has concluded that general controls are sufficient to provide reasonable assurance of the safety and effectiveness of the device.

During FDA's meeting of the Section, one of the Section members pointed out that the comment's figure of 10 to 25 percent for unusable stain lots refers to the acid phosphatase stain and not to alkaline phosphatase stain. The member also noted that an evaluation of the stain kits for this test had shown them to be very reliable.

Accordingly, FDA is adopting the proposed regulation without change.

On April 28, 1978, the agency terminated all of the device classification panels and reestablished them with the same functions, but with new names and with a new structure. FDA published notices of these changes in the Federal Register of May 19, 1978 (43 FR 21666, 21667, and 21668) and May 26, 1978 (43 FR 22672 and 22673). Further information regarding the device advisory committees and a list of their new names may be found in the preamble to the general provisions, published elsewhere in this issue of the Federal Register.

Therefore, under the Federal Food, Drug, and Cosmetic Act (secs. 513, 701(a), 52 Stat. 1055, 90 Stat. 540–546 (21 U.S.C. 360c, 371(a))) and under authority delegated to him (21 CFR 5.1), the Commissioner of Food and Drugs is amending Part 864 in Subpart H by adding new § 864.7660, to read as follows:

§ 864.7660 Leukocyte alkaline phosphatase test.

(a) *Identification.* A leukocyte alkaline phosphatase test is a device used to identify the enzyme leukocyte alkaline phosphatase in neutrophilic granulocytes (granular leukocytes stainable by neutral dyes). The cytochemical identification of alkaline phosphatase depends on the formation of blue granules in cells containing alkaline phosphatase. The results of this test are used to differentiate chronic granulocytic leukemia (a malignant disease characterized by excessive

overgrowth of granulocytes in the bone marrow) and reactions that resemble true leukemia, such as those occuring in severe infections and polycythemia (increased total red cell mass).

(b) *Classification.* Class I (general controls.

Effective date. This regulation shall be effective October 14, 1980.

(Secs. 513, 701(a), 52 Stat. 1055, 90 Stat. 540–546 (21 U.S.C. 360c, 371(a)))

Dated: August 15, 1980.

William F. Randolph,

Acting Associate Commissioner for Regulatory Affairs.

[FR Doc. 80-27360 Filed 9-11-80; 8:45 am]

BILLING CODE 4110-03-M

---

21 CFR Part 864

[Docket No. 78N-1899]

Classification of Leukocyte Peroxidase Tests

AGENCY: Food and Drug Administration.

ACTION: Final rule.

SUMMARY: The Food and Drug Administration (FDA) is issuing a final rule classifying leukocyte peroxidase tests into class I (general controls). The effect of classifying a device into class I is to require that the device meet only the general controls applicable to all devices. This action is being taken under the Medical Device Amendments of 1976.

EFFECTIVE DATE: October 14, 1980.

FOR FURTHER INFORMATION CONTACT: Kaiser Aziz, Bureau of Medical Devices (HFK-440), Food and Drug Administration, 8757 Georgia Ave., Silver Spring, MD 20910, 301-427-7550.

SUPPLEMENTARY INFORMATION: FDA published in the Federal Register of September 11, 1979 (44 FR 52950), a proposed regulation explaining the development of the proposed regulations classifying hematology and pathology devices, the medical device classification procedures, and the activities of the Hematology and Pathology Device Section of the Clinical Chemistry and Hematology Devices Panel (formerly the Hematology Device Classification Panel and the Pathology Device Classification Panel). FDA also published in that issue of the Federal Register (44 FR 53022) a proposed regulation to classify leukocyte peroxidase tests into class I (general controls). A period of 60 days was provided for interested persons to submit written comments to FDA.

The one comment received on the proposal disagreed with the proposed classification of the leukocyte peroxidase test into class I. The comment noted that an error in the test could result in inappropriate therapy for leukemia. The comment cited the Panel's contention that stains are hard to standardize, vary from lot-to-lot, and 10 to 25 percent of stain lots are unusable. The comment stated that a performance standard is necessary to provide a reasonable assurance of the safety and effectiveness of the test. The comment recommended that these tests be placed into class II.

FDA disagrees with the comment and is classifying the tests into class I as proposed.

On November 19, 1979, FDA held a public meeting of the Hematology Devices Section of the Clinical Chemistry and Hematology Devices Panel. At that meeting a representative of the Health Research Group (HRG) presented HRG's view that leukocyte peroxidase tests should be classified into class II rather than class I as proposed.

After considering the comment, the testimony, and the Section's recommendation to classify the device into class I as proposed, FDA has concluded that general controls are sufficient to provide reasonable assurance of the safety and effectiveness of the tests. During FDA's meeting of the Section, one of the Section members pointed out that the comment's figure of 10 to 25 percent for unusable stain lots refers to the acid phosphatase stain and not to the leukocyte peroxidase stain. The member also noted that evaluation of the stain kits for this test had shown them to be very reliable.

Accordingly, FDA is adopting the proposed regulation without change.

On April 28, 1978, the agency terminated all of the device classification panels and reestablished them with the same functions, but with new names and with a new structure. FDA published notices of these changes in the Federal Register of May 19, 1978 (43 FR 21666, 21667, and 21668) and May 26, 1978 (43 FR 22672 and 22673). Further information regarding the device advisory committees and a list of their new names may be found in the preamble to the general provisions, published elsewhere in this issue of the Federal Register.

Therefore, under the Federal Food, Drug, and Cosmetic Act (secs. 513, 701(a), 52 Stat. 1055, 90 Stat. 540–546 (21 U.S.C. 360c, 371(a))) and under authority delegated to him (21 CFR 5.1), the Commissioner of Food and Drugs is amending Part 864 in Subpart H by adding new § 864.7675, to read as follows:

§ 864.7675 Leukocyte peroxidase test.

(a) *Identification.* A leukocyte peroxidase test is a device used to distinguish certain myeloid cells derived from the bone marrow, i.e., neutrophils, eosinophils, and monocytes, from lymphoid cells of the lymphatic system and erythroid cells of the red blood cell series on the basis of their peroxidase activity as evidenced by staining. The results of this test are used in the differential diagnosis of the leukemias.

(b) *Classification.* Class I (general controls).

Effective date. This regulation shall be effective October 14, 1980.

(Secs. 513, 701(a), 52 Stat. 1055, 90 Stat. 540–546 (21 U.S.C. 360c, 371(a)))

Dated: August 15, 1980.

William F. Randolph,

Acting Associate Commissioner for Regulatory Affairs.

[FR Doc. 80-27361 Filed 9-11-80; 8:45 am]

BILLING CODE 4110-03-M

---

21 CFR Part 864

[Docket No. 79P-0112]

Classification of Platelet Factor 4 Radioimmunoassays

AGENCY: Food and Drug Administration.

ACTION: Final rule.

SUMMARY: The Food and Drug Administration (FDA) is issuing a final rule to codify its 1979 order reclassifying platelet factor 4 radioimmunoassays from class III (premarket approval) to class II (performance standards). FDA issued the order after reviewing a manufacturer's reclassification petition and publishing for comment the recommendation of an FDA advisory committee. The effect of classifying a device into class II is to provide for the future development of one or more performance standards to assure the safety and effectiveness of the device. This action is being taken under the Medical Device Amendments of 1976.

EFFECTIVE DATE: October 14, 1980.

FOR FURTHER INFORMATION CONTACT: Kaiser Aziz, Bureau of Medical Devices (HFK-440), Food and Drug Administration, 8757 Georgia Ave., Silver Spring, MD 20910, 301-427-7550.

SUPPLEMENTARY INFORMATION: Section 513(f) of the Federal Food, Drug, and Cosmetic Act (21 U.S.C. 360c(f)) classifies into class III (premarket approval) a device that is first offered for commercial distribution after enactment of the Medical Device Amendments and that is not substantially equivalent to a preamendments device. On July 31, 1978,

Abbott Laboratories, North Chicago, Illinois 60064, submitted to FDA a petition for reclassification of a device it intended to market as a radioimmunoassay procedure for the measurement of platelet factor 4 in human plasma. This device was classified into class III pursuant to section 513(f). On November 21 and 22, 1978, the Hematology Section of the Clinical Chemistry and Hematology Devices Panel (formerly the Hematology Device Classification Panel) reviewed the petition and requested additional data and information. The petitioner withdrew the petition on December 8, 1978, and resubmitted it with additional data and information on January 29, 1979. On February 16, 1979, the Hematology Section reviewed the submitted petition, assigned to this generic type of device the name "platelet factor 4 radioimmunoassay," and recommended that the device be reclassified into class II.

FDA published a notice of the Hematology Section's recommendation in the Federal Register of June 1, 1979 (44 FR 31714), and provided a period of 30 days for interested persons to submit written comments to FDA. FDA received no comments on the recommendation. Because FDA agreed with the Hematology Section's recommendation, the agency granted the petition and reclassified the device into class II by order in the form of a letter to the sponsor dated July 18, 1979.

This regulation codifies the 1979 order. The order and the regulation apply to any device that is substantially equivalent to the reclassified device. FDA determines substantial equivalence by reviewing premarket notification submissions under section 510(k) of the act (21 U.S.C. 360(k)) and Subpart E of Part 807 of the regulations (21 CFR Part 807, Subpart E).

On April 18, 1978, the agency terminated all of the device classification panels and reestablished them with the same functions, but with new names and with a new structure. FDA published notices of these changes in the Federal Register of May 19, 1978 (43 FR 21666, 21667, and 21668) and May 26, 1978 (43 FR 22672 and 22673). Further information regarding the device advisory committees and a list of their new names may be found in the preamble to the general provisions, published elsewhere in this issue of the Federal Register.

Therefore, under the Federal Food, Drug, and Cosmetic Act (secs. 513, 701(a), 52 Stat. 1055, 90 Stat. 540–546 (21 U.S.C. 360c, 371(a))) and under authority delegated to him (21 CFR 5.1), the Commissioner of Food and Drugs is amending Part 864 in Subpart H by adding new § 864.7695, to read as follows:

§ 864.7695 Platelet factor 4 radioimmunoassay.

(a) *Identification.* A platelet factor 4 radioimmunoassay is a device used to measure the level of platelet factor 4, a protein released during platelet activation, which may indicate a coagulation disorder, such as myocardial infarction or coronary artery disease.

(b) *Classification.* Class II (performance standards).

Effective date. This regulation shall be effective October 14, 1980.

(Secs. 513, 701(a), 52 Stat. 1055, 90 Stat. 540–546 (21 U.S.C. 360c, 371(a)))

Dated: August 15, 1980.

William F. Randolph,

Acting Associate Commissioner for Regulatory Affairs.

[FR Doc. 80-27362 Filed 9-11-80; 8:45 am]

BILLING CODE 4110-03-M

---

21 CFR Part 864

[Docket No. 78N-1900]

Classification of Prothrombin Consumption Tests

AGENCY: Food and Drug Administration.

ACTION: Final rule.

SUMMARY: The Food and Drug Administration (FDA) is issuing a final rule classifying prothrombin consumption tests into class II (performance standards). The effect of classifying a device into class II is to provide for the future development of one or more performance standards to assure the safety and effectiveness of the device. This action is being taken under the Medical Device Amendments of 1976.

EFFECTIVE DATE: October 14, 1980.

FOR FURTHER INFORMATION CONTACT: Kaiser Aziz, Bureau of Medical Devices (HFK-440), Food and Drug Administration, 8757 Georgia Ave., Silver Spring, MD 20910, 301-427-7550.

SUPPLEMENTARY INFORMATION: FDA published in the Federal Register of September 11, 1979 (44 FR 52950), a proposed regulation explaining the development of the proposed regulations classifying hematology and pathology devices, the medical device classification procedures, and the activities of the Hematology and Pathology Device Section of the Clinical Chemistry and Hematology Devices Panel (formerly the Hematology Device Classification Panel and the Pathology Device Classification Panel). FDA also published in that issue of the Federal Register (44 FR 53023) a proposed regulation to classify prothrombin consumption tests into class II (performance standards). A period of 60 days was provided for interested persons to submit written comments to FDA.

No comments have been received regarding the proposed regulation to classify this device. Accordingly, the proposed regulation is being adopted without change.

On April 28, 1978, the agency terminated all of the device classification panels and reestablished them with the same functions, but with new names and with a new structure. FDA published notices of these changes in the Federal Register of May 19, 1978 (43 FR 21666, 21667, and 21668) and May 26, 1978 (43 FR 22672 and 22673). Further information regarding the device advisory committees and a list of their new names may be found in the premable to the general provisions, published elsewhere in this issue of the Federal Register.

Therefore, under the Federal Food, Drug, and Cosmetic Act (secs. 513, 701(a), 52 Stat. 1055, 90 Stat. 540–546 (21 U.S.C. 360c, 371(a))) and under authority delegated to him (21 CFR 5.1), the Commissioner of Food and Drugs is amending Part 864 in Subpart H by adding new § 864.7720, to read as follows:

§ 864.7720 Prothrombin consumption test.

(a) *Identification.* A prothrombin consumption tests is a device that measures the patient's capacity to generate thromboplastin in the coagulation process. The test also is an indirect indicator of qualitative or quantitative platelet abnormalities. It is screening test for thrombocytopenia (decreased number of blood platelets) and hemophilia A and B.

(b) *Classification.* Class II (performance standards).

Effective date. This regulation shall be effective October 14, 1980.

(Secs. 513, 701(a), 52 Stat. 1055, 90 Stat. 540–546 (21 U.S.C. 360c, 371(a)))

Dated: August 15, 1980.

William F. Randolph,

Acting Associate Commissioner for Regulatory Affairs.

[FR Doc. 80-27363 Filed 9-11-80; 8:45 am]

BILLING CODE 4110-03-M

21 CFR Part 864

[Docket No. 78N-1901]

Classification of Prothrombin-Proconvertin Tests and Thrombotests

AGENCY: Food and Drug Administration.

ACTION: Final rule.

SUMMARY: The Food and Drug Administration (FDA) is issuing a final rule classifying prothrombin-proconvertin tests and thrombotests into class II (performance standards). The effect of classifying a device into class II is to provide for the future development of one or more performance standards to assure the safety and effectiveness of the device. This action is being taken under the Medical Device Amendments of 1976.

EFFECTIVE DATE: October 14, 1980.

FOR FURTHER INFORMATION CONTACT: Kaiser Aziz, Bureau of Medical Devices (HFK-440), Food and Drug Administration, 8757 Georgia Ave., Silver Spring, MD 20910, 301-427-7550.

SUPPLEMENTARY INFORMATION: FDA published in the Federal Register of September 11, 1979 (44 FR 52950), a proposed regulation explaining the development of the proposed regulations classifying hematology and pathology devices, the medical device classification procedures, and the activities of the Hematology and Pathology Device Section of the Clinical Chemistry and Hematology Devices Panel (formerly the Hematology Device Classification Panel and the Pathology Device Classification Panel). FDA also published in that issue of the Federal Register (44 FR 53024) a proposed regulation to classify prothrombin-proconvertin tests and thrombotests into class II (performance standards). A period of 60 days was provided for interested persons to submit written comments to FDA.

No comments have been received regarding the proposed regulation to classify this device. Accordingly, the proposed regulation is being adopted without change.

On April 28, 1978, the agency terminated all of the device classification panels and reestablished them with the same functions, but with new names and with a new structure. FDA published notices of these changes in the Federal Register of May 19, 1978 (43 FR 21666, 21667, and 21668) and May 26, 1978 (43 FR 22672 and 22673). Further information regarding the device advisory committees and a list of their new names may be found in the preamble to the general provisions, published elsewhere in this issue of the Federal Register.

Therefore, under the Federal Food, Drug, and Cosmetic Act (secs. 513, 701(a), 52 Stat. 1055, 90 Stat. 540-546 (21 U.S.C. 360c, 371(a))) and under authority delegated to him (21 CFR 5.1), the Commissioner of Food and Drugs is amending Part 864 in Subpart H by adding new § 864.7735, to read as follows:

§ 864.7735 Prothrombin-proconvertin test and thrombotest.

(a) *Identification.* The prothrombin-proconvertin test and thrombotest are devices used in the regulation of coumarin therapy (administration of a coumarin anticoagulant such as sodium warfarin in the treatment of venous thrombosis and pulmonary embolism) and as a diagnostic test in conjunction with, or in place of, the Quick prothrombin time test to detect coagulation disorders.

(b) *Classification.* Class II (performance standards).

Effective date. This regulation shall be effective October 14, 1980.

(Secs. 513, 701(a), 52 Stat. 1055, 90 Stat. 540-546 (21 U.S.C. 360c, 371(a)))

Dated: August 15, 1980.

William F. Randolph,

Acting Associate Commissioner for Regulatory Affairs.

[FR Doc. 80-27364 Filed 9-11-80; 8:45 am]

BILLING CODE 4110-03-M

21 CFR Part 864

[Docket No. 78N-1902]

Classification of Prothrombin Time Tests

AGENCY: Food and Drug Administration.

ACTION: Final rule.

SUMMARY: The Food and Drug Administration (FDA) is issuing a final rule classifying prothrombin time tests into class II (performance standards). The effect of classifying a device into class II is to provide for the future development of one or more performance standards to assure the safety and effectiveness of the device. This action is being taken under the Medical Device Amendments of 1976.

EFFECTIVE DATE: October 14, 1980.

FOR FURTHER INFORMATION CONTACT: Kaiser Aziz, Bureau of Medical Devices (HFK-440), Food and Drug Administration, 8757 Georgia Ave., Silver Spring, MD 20910, 301-427-7550.

SUPPLEMENTARY INFORMATION: FDA published in the Federal Register of September 11, 1979 (44 FR 52950), a proposed regulation explaining the development of the proposed regulations classifying hematology and pathology devices, the medical device classification procedures, and the activities of the Hematology and Pathology Device Section of the Clinical Chemistry and Hematology Devices Panel (formerly the Hematology Device Classification Panel and the Pathology Device Classification Panel). FDA also published in that issue of the Federal Register (44 FR 53025) a proposed regulation to classify prothrombin time tests into class II (performance standards). A period of 60 days was provided for interested persons to submit written comments to FDA.

No comments have been received regarding the proposed regulation to classify this device. Accordingly, the proposed regulation is being adopted without change.

On April 28, 1978, the agency terminated all of the device classification panels and reestablished them with the same functions, but with new names and with a new structure. FDA published notices of these changes in the Federal Register of May 19, 1978 (43 FR 21666, 21667, and 21668) and May 26, 1978 (43 FR 22672 and 22673). Further information regarding the device advisory committees and a list of their new names may be found in the preamble to the general provisions, published elsewhere in this issue of the Federal Register.

Therefore, under the Federal Food, Drug, and Cosmetic Act (secs. 513, 701(a), 52 Stat. 1055, 90 Stat. 540-546 (21 U.S.C. 360c, 371(a))) and under authority delegated to him (21 CFR 5.1), the Commissioner of Food and Drugs is amending Part 864 in Subpart H by adding new § 864.7750, to read as follows:

§ 864.7750 Prothrombin time test.

(a) *Identification.* A prothrombin time test is a device used as a general screening procedure for the detection of possible clotting factor deficiencies in the extrinsic coagulation pathway, which involves the reaction between coagulation factors III and VII, and to monitor patients receiving coumarin therapy (the administration of one of the coumarin anticoagulants in the treatment of venous thrombosis or pulmonary embolism).

(b) *Classification.* Class II (performance standards).

Effective date. This regulation shall be effective October 14, 1980.

(Secs. 513, 701(a), 52 Stat. 1055, 90 Stat. 540-546 (21 U.S.C. 360c, 371(a)))

Dated: August 15, 1980.

William F. Randolph,

Acting Associate Commissioner for Regulatory Affairs.

[FR Doc. 80-27365 Filed 9-11-80; 8:45 am]

BILLING CODE 4110-03-M

---

21 CFR Part 864

[Docket No. 78N-1903]

Classification of Sickle Cell Tests

AGENCY: Food and Drug Administration.

ACTION: Final rule.

SUMMARY: The Food and Drug Administration (FDA) is issuing a final rule classifying sickle cell tests into class II (performance standards). The effect of classifying a device into class II is to provide for the future development of one or more performance standards to assure the safety and effectiveness of the device. This action is being taken under the Medical Device Amendments of 1976.

EFFECTIVE DATE: October 14, 1980.

FOR FURTHER INFORMATION CONTACT: Kaiser Aziz, Bureau of Medical Devices (HFK-440), Food and Drug Administration, 8757 Georgia Ave., Silver Spring, MD 20910, 301-427-7550.

SUPPLEMENTARY INFORMATION: FDA published in the Federal Register of September 11, 1979 (44 FR 52950), a proposed regulation explaining the development of the proposed regulations classifying hematology and pathology devices, the medical device classification procedures, and the activities of the Hematology and Pathology Device Section of the Clinical Chemistry and Hematology Devices Panel (formerly the Hematology Device Classification Panal and the Pathology Device Classification Panel). FDA also published in that issue of the Federal Register (44 FR 53026) a proposed regulation to classify sickle cell tests into class II (performance standards). A period of 60 days was provided for interested persons to submit written comments to FDA.

The one comment on the proposal noted that the identification section of the regulation states that a sickle cell test is used to determine the sickle cell hemoglobin content of human blood to detect sickle cell anemia. The comment suggested that a sickle cell solubility test does not detect sickle cell anemia. Instead it detects the presence of sickle cell hemoglobin, whether it is in the heterozygous or homozygous state.

FDA agrees with this comment. The agency has modified the identification to make it clear that the test detects sickle trait or sickle cell disease. Therefore, the proposed regulation is being adopted with the changes noted.

On April 28, 1978, the agency terminated all of the device classification panels and reestablished them with the same functions, but with new names and with a new structure. FDA published notices of these changes in the Federal Register of May 19, 1978 (43 FR 21666, 21667, and 21668) and May 26, 1978 (43 FR 22672 and 22673). Further information regarding the device advisory committees and a list of their new names may be found in the preamble to the general provisions, published elsewhere in this issue of the Federal Register.

Therefore, under the Federal Food, Drug, and Cosmetic Act (secs. 513, 701(a), 52 Stat. 1055, 90 Stat. 540-546 (21 U.S.C. 360c, 371(a))) and under authority delegated to him (21 CFR 5.1), the Commissioner of Food and Drugs is amending Part 864 in Subpart H by adding new § 864.7825, to read as follows:

§ 864.7825 Sickle cell test.

(a) *Identification.* A sickle cell test is a device used to determine the sickle cell hemoglobin content of human blood to detect sickle cell trait or sickle cell diseases.

(b) *Classification.* Class II (performance standards).

Effective date. This regulation shall be effective October 14, 1980.

(Secs. 513, 701(a), 52 Stat. 1055, 90 Stat. 540-546 (21 U.S.C. 360c, 371(a)))

Dated: August 15, 1980.

William F. Randolph,

Acting Associate Commissioner for Regulatory Affairs.

[FR Doc. 80-27366 Filed 9-11-80; 8:45 am]

BILLING CODE 4110-03-M

---

21 CFR Part 864

[Docket No. 78N-1904]

Classification of Thrombin Time Tests

AGENCY: Food and Drug Administration.

ACTION: Final rule.

SUMMARY: The Food and Drug Administration (FDA) is issuing a final rule classifying thrombin time tests into class II (performance standards). The effect of classifying a device into class II is to provide for the future development of one or more performance standards to assure the safety and effectiveness of the device. This action is being taken under the Medical Device Amendments of 1976.

EFFECTIVE DATE: October 14, 1980.

FOR FURTHER INFORMATION CONTACT: Kaiser Aziz, Bureau of Medical Devices (HFK-440), Food and Drug Administration, 8757 Georgia Ave., Silver Spring, MD 20910, 301-427-7550.

SUPPLEMENTARY INFORMATION: FDA published in the Federal Register of September 11, 1979 (44 FR 52950), a proposed regulation explaining the development of the proposed regulations classifying hematology and pathology devices, the medical device classification procedures, and the activities of the Hematology and Pathology Device Section of the Clinical Chemistry and Hematology Devices Panel (formerly the Hematology Device Classification Panel and the Pathology Device Classification Panel). FDA also published in that issue of the Federal Register (44 FR 53027) a proposed regulation to classify thrombin time tests into class II (performance standards). A period of 60 days was provided for interested persons to submit written comments to FDA.

In the one comment received on the proposal, a manufacturer of a bovine thrombin product stated that its product is used both for fibrinogen determination procedures and for clotting factor assays. The manufacturer is concerned that the product might be subject to two potentially conflicting standards due to the wording of the identification sections of the proposed regulations for fibrinogen determination systems and the thrombin time tests, Docket Numbers 78N-1886 and 78N-1904, respectively. The manufacturer requested that the proposed regulations be reworded so as to subject bovine thrombin to a single standard.

FDA does not believe that it is necessary to reword the regulations. If bovine thrombin is offered as a component of a system or as an accessory to a system, it must meet the performance standard applicable to that system. Therefore, it is conceivable that bovine thrombin will be subject to two standards. The matter of overlapping performance standards will receive careful consideration during the standard development process, so that the resultant standards will not impose an intolerable burden on the manufacturers of these products.

Accordingly, the proposed regulation is being adopted without change.

On April 28, 1978, the agency terminated all of the device classification panels and reestablished them with the same functions, but with new names and with a new structure. FDA published notices of these changes in the Federal Register of May 19, 1978 (43 FR 21666, 21667, and 21668) and May

26, 1978 (43 FR 22672 and 22673). Further information regarding the device advisory committees and a list of their new names may be found in the preamble to the general provisions, published elsewhere in this issue of the Federal Register.

Therefore, under the Federal Food, Drug, and Cosmetic Act (secs. 513, 701(a), 52 Stat. 1055, 90 Stat. 540–546 (21 U.S.C. 360c, 371(a))) and under authority delegated to him (21 CFR 5.1), the Commissioner of Food and Drugs is amending Part 864 in Subpart H by adding new § 864.7875, to read as follows:

§ 864.7875 Thrombin time test.

(a) *Identification.* A thrombin time test is a device used to measure fibrinogen concentration and detect fibrin or fibrinogen split products for the evaluation of bleeding disorders.

(b) *Classification.* Class II (performance standards).

Effective date. This regulation shall be effective October 14, 1980.

(Secs. 513, 701(a), 52 Stat. 1055, 90 Stat. 540–546 (21 U.S.C. 360c, 371(a)))

Dated: August 15, 1980.

William F. Randolph,

Acting Associate Commissioner for Regulatory Affairs.

[FR Doc. 80-27367 Filed 9-11-80; 8:45 am]

BILLING CODE 4110-03-M

---

21 CFR Part 864

[Docket No. 78N-1905]

Classification of Thromboplastin Generation Tests

AGENCY: Food and Drug Administration.

ACTION: Final rule.

SUMMARY: The Food and Drug Administration (FDA) is issuing a final rule classifying thromboplastin generation tests into class I (general controls). The effect of classifying a device into class I is to require that the device meet only the general controls applicable to all devices. This action is being taken under the Medical Device Amendments of 1976.

EFFECTIVE DATE: October 14, 1980.

FOR FURTHER INFORMATION CONTACT: Kaiser Aziz, Bureau of Medical Devices (HFK-440), Food and Drug Administration, 8757 Georgia Ave., Silver Spring, MD 20910, 301-427-7550.

SUPPLEMENTARY INFORMATION: FDA published in the Federal Register of September 11, 1979 (44 FR 52950), a proposed regulation explaining the development of the proposed regulations classifying hematology and pathology devices, the medical device classification procedures, and the activities of the Hematology and Pathology Device Section of the Clinical Chemistry and Hematology Devices Panel (formerly the Hematology Device Classification Panal and the Pathology Device Classification Panel). FDA also published in that issue of the Federal Register (44 FR 53028) a proposed regulation to classify thromboplastin generation tests into class I (general controls). A period of 60 days was provided for interested persons to submit written comments to FDA.

The one comment received on the proposal objected to the proposed classification of the thromboplastin generation test into class I. The comment noted that an error in the test or its interpretation could result in the failure to diagnose a serious disorder or in an erroneous diagnosis of blood disease. The comment stated that the test has been rendered obsolete by the more reliable partial thromboplastin time test. The comment suggested that due to its relative ineffectiveness and the resultant risk to the patient, the test should be placed into class III.

FDA disagrees with the comment and is classifying the test into class I as proposed.

On November 19, 1979, FDA held a public meeting of Hematology Devices Section of the Clinical Chemistry and Hematology Devices Panel. At the meeting, a representative of the Health Research Group (HRG) presented HRG's view that this test should be placed into class III rather than class I as proposed.

After considering the comment, the testimony, and the Section's recommendation to classify the device into class I as proposed, FDA has decided to classify the device into class I as proposed. This test does not serve as the sole basis for a diagnosis, but rather it is used in conjunction with other tests. Therefore, there is minimal risk of misdiagnosis due to this test. FDA believes that general controls are sufficient to provide reasonable assurance of the safety and effectiveness of this device. Accordingly, the proposed regulation is being adopted without change.

On April 28, 1978, the agency terminated all of the device classification panels and reestablished them with the same functions, but with new names and with a new structure. FDA published notices of these changes in the Federal Register of May 19, 1978 (43 FR 21666, 21667, and 21668) and May 26, 1978 (43 FR 22672 and 22673). Further information regarding the device advisory committees and a list of their new names may be found in the preamble to the general provisions, published elsewhere in this issue of the Federal Register.

Therefore, under the Federal Food, Drug, and Cosmetic Act (secs. 513, 701(a), 52 Stat. 1055, 90 Stat. 540–546 (21 U.S.C. 360c, 371(a))) and under authority delegated to him (21 CFR 5.1), the Commissioner of Food and Drugs is amending Part 864 in Subpart H by adding new § 864.7900, to read as follows:

§ 864.7900 Thromboplastin generation test.

(a) *Identification.* A thromboplastin generation test is a device used to detect and identify coagulation factor deficiencies and coagulation inhibitors.

(b) *Classification.* Class I (general controls).

Effective date. This regulation shall be effective October 14, 1980.

(Secs. 513, 701(a), 52 Stat. 1055, 90 Stat. 540–546 (21 U.S.C. 360c, 371(a)))

Dated: August 15, 1980.

William F. Randolph,

Acting Associate Commissioner for Regulatory Affairs.

[FR Doc. 80-27368 Filed 9-11-80; 8:45 am]

BILLING CODE 4110-03-M

---

21 CFR Part 864

[Docket No. 78N-1906]

Classification of Partial Thromboplastin Time Tests

AGENCY: Food and Drug Administration.

ACTION: Final rule.

SUMMARY: The Food and Drug Administration (FDA) is issuing a final rule classifying partial thromboplastin time tests into class II (performance standards). The effect of classifying a device into class II is to provide for the future development of one or more performance standards to assure the safety and effectiveness of the device. This action is being taken under the Medical Device Amendments of 1976.

EFFECTIVE DATE: October 14, 1980.

FOR FURTHER INFORMATION CONTACT: Kaiser Aziz, Bureau of Medical Devices (HFK-440), Food and Drug Administration, 8757 Georgia Ave., Silver Spring, MD 20910, 301-427-7550.

SUPPLEMENTARY INFORMATION: FDA published in the Federal Register of September 11, 1979 (44 FR 52950), a proposed regulation explaining the development of the proposed regulations classifying hematology and pathology devices, the medical device classification procedures, and the activities of the Hematology and

Pathology Device Section of the Clinical Chemistry and Hematology Devices Panel (formerly the Hematology Device Classification Panel and the Pathology Device Classification Panel). FDA also published in that issue of the Federal Register (44 FR 53029) a proposed regulation to classify partial thromboplastin time tests into class II (performance standards). A period of 60 days was provided for interested persons to submit written comments to FDA.

No comments have been received regarding the proposed regulation to classify this device. Accordingly, the proposed regulation is being adopted without change.

On April 28, 1978, the agency terminated all of the device classification panels and reestablished them with the same functions, but with new names and with a new structure. FDA published notices of these changes in the Federal Register of May 19, 1978 (43 FR 21666, 21667, and 21668) and May 26, 1978 (43 FR 22672 and 22673). Further information regarding the device advisory committees and a list of their new names may be found in the preamble to the general provisions, published elsewhere in this issue of the Federal Register.

Therefore, under the Federal Food, Drug, and Cosmetic Act (secs. 513, 701(a), 52 Stat. 1055, 90 Stat. 540–546 (21 U.S.C. 360c, 371(a))) and under authority delegated to him (21 CFR 5.1), the Commissioner of Food and Drugs is amending Part 864 in Subpart H by adding new § 864.7925, to read as follows:

§ 864.7925 Partial thromboplastin time tests.

(a) *Identification.* A partial thromboplastin time test is a device used for primary screening for coagulation abnormalities, for evaluation of the effect of therapy on procoagulant disorders, and as an assay for coagulation factor deficiencies of the intrinsic coagulation pathway.

(b) *Classification.* Class II (performance standards).

Effective date. This regulation shall be effective October 14, 1980.

(Secs. 513, 701(a), 52 Stat. 1055, 90 Stat. 540–546 (21 U.S.C. 360c, 371(a)))

Dated: August 15, 1980.

William F. Randolph,

Acting Associate Commissioner for Regulatory Affairs.

[FR Doc. 80-27369 Filed 9-11-80; 8:45 am]

BILLING CODE 4110-03-M

21 CFR Part 864

[Docket No. 78N-1908]

Classification of Bothrops Atrox Reagents

AGENCY: Food and Drug Administration.

ACTION: Final rule.

SUMMARY: The Food and Drug Administration (FDA) is issuing a final rule classifying bothrops atrox reagents into class II (performance standards). The effect of classifying a device into class II is to provide for the future development of one or more performance standards to assure the safety and effectiveness of the device. This action is being taken under the Medical Device Amendments of 1976.

EFFECTIVE DATE: October 14, 1980.

FOR FURTHER INFORMATION CONTACT: Kaiser Aziz, Bureau of Medical Devices (HFK-440), Food and Drug Administration, 8757 Georgia Ave., Silver Spring, MD 20910, 301-427-7550.

SUPPLEMENTARY INFORMATION: FDA published in the Federal Register of September 11, 1979 (44 FR 52950), a proposed regulation explaining the development of the proposed regulations classifying hematology and pathology devices, the medical device classification procedures, and the activities of the Hematology and Pathology Device Section of the Clinical Chemistry and Hematology Devices Panel (formerly the Hematology Device Classification Panel and the Pathology Device Classification Panel). FDA also published in that issue of the Federal Register (44 FR 53031) a proposed regulation to classify bothrops atrox reagents into class II (performance standards). A period of 60 days was provided for interested persons to submit written comments to FDA.

No comments have been received regarding the proposed regulation to classify this device. Accordingly, the proposed regulation is being adopted without change.

On April 28, 1978, the agency terminated all of the device classification panels and reestablished them with the same functions, but with new names and with a new structure. FDA published notices of these changes in the Federal Register of May 19, 1978 (43 FR 21666, 21667, and 21668) and May 26, 1978 (43 FR 22672 and 22673). Further information regarding the device advisory committees and a list of their new names may be found in the preamble to the general provisions, published elsewhere in this issue of the Federal Register.

Therefore, under the Federal Food, Drug, and Cosmetic Act (secs. 513, 701(a), 52 Stat. 1055, 90 Stat. 540–546 (21 U.S.C. 360c, 371(a))) and under authority delegated to him (21 CFR 5.1), the Commissioner of Food and Drugs is amending Part 864 in Subpart I by adding new § 864.8100, to read as follows:

Subpart I—Hematology Reagents

§ 864.8100 Bothrops atrox reagent.

(a) *Identification.* A Bothrops atrox reagent is a device made from snake venom and used to determine blood fibrinogen levels to aid in the evaluation of disseminated intravascular coagulation (nonlocalized clotting in the blood vessels) in patients receiving heparin therapy (the administration of the anticoagulant heparin in the treatment of thrombosis) or as an aid in the classification of dysfibrinogenemia (presence in the plasma of functionally defective fibrinogen).

(b) *Classification.* Class II (performance standards).

Effective date. This regulation shall be effective October 14, 1980.

(Secs. 513, 701(a), 52 Stat. 1055, 90 Stat. 540–546 (21 U.S.C. 360c, 371(a)))

Dated: August 15, 1980.

William F. Randolph,

Acting Associate Commissioner for Regulatory Affairs.

[FR Doc. 80-27370 Filed 9-11-80; 8:45 am]

BILLING CODE 4110-03-M

21 CFR Part 864

[Docket No. 78N-1909]

Classification of Calibrators for Cell Indices

AGENCY: Food and Drug Administration.

ACTION: Final rule.

SUMMARY: The Food and Drug Administration (FDA) is issuing a final rule classifying calibrators for cell indices into class II (performance standards). The effect of classifying a device into class II is to provide for the future development of one or more performance standards to assure the safety and effectiveness of the device. This action is being taken under the Medical Device Amendments of 1976.

EFFECTIVE DATE: October 14, 1980.

FOR FURTHER INFORMATION CONTACT: Kaiser Aziz, Bureau of Medical Devices (HFK-440), Food and Drug Administration, 8757 Georgia Ave., Silver Spring, MD 20910, 301-427-7550.

SUPPLEMENTARY INFORMATION: FDA published in the Federal Register of

September 11, 1979 (44 FR 52950), a proposed regulation explaining the development of the proposed regulations classifying hematology and pathology devices, the medical device classification procedures, and the activities of the Hematology and Pathololgy Device Section of the Clinical Chemistry and Hematology Devices Panel (formerly the Hematology Device Classification Panel and the Pathology Device Classification Panel). FDA also published in that issue of the Federal Register (44 FR 53032) a proposed regulation to classify calibrators for cell indices into class III (premarket approval). A period of 60 days was provided for interested persons to submit written comments to FDA.

The following is a summary of the comments received on the proposal and the agency's response to them:

1. One comment suggested that the identification is erroneous because only the mean cell volume (MCV) is calibrated. The mean cell diameter (MCD), mean corpuscular hemoglobin (MCH), and mean corpuscular hemoglobin concentration (MCHC) are not biological parameters. The comment noted that the MCD is a dimension measured by optical sensing instruments. The MCH is based on the hemoglobin and hematocrit measurements for which calibrators exist. The MCHC is computed. The comment suggested that the cell indices other than MCV be dropped from the identification or be placed in class II or class I.

FDA agrees that the MCD should be deleted from the identification. However, some calibrators currently marketed claim an intended use for the calibration of instruments that measure three red cell indices: MCV, MCH, and MCHC. In fact, one of the references included with this comment lists the red cell indices as MCV, MCH, and MCHC. FDA believes it is appropriate to include the MCH and MCHC in the identification.

2. One comment objected to the use of the word "fixed" in the identification, because its meaning is not sufficiently precise to be understood in this context.

FDA agrees with this comment. The identification has been modified to delete the term "fixed".

3. One comment objected to the statement that calibrators are materials whose "characteristics have been carefully determined." The comment suggested that precision and accuracy are more appropriate than care.

FDA agrees with this comment. The identification has been modified to emphasize precision and accuracy rather than care.

4. One comment asserted that the device does not present a potential unreasonable risk of illness or injury and thus questioned whether the device met this criterion for classification into class III. The comment noted that the risk of erroneous results is derived about equally from machine malfunction, reagent deterioration, improper operation of the measuring instrument, or calibrator inaccuracy. The comment also suggested that a physician would not base a diagnosis upon a reported MCV alone.

The agency partially agrees with the comment. A physician would not diagnose solely on the basis of the reported MCV. However, FDA believes that this device presents a potential unreasonable risk of illness or injury to the patient. Although the risk of erroneous results may be from machine malfunction, reagent deterioration, improper operation of the measuring instrument, or calibrator inaccuracy in making its recommendation published with the proposal, the Panel believed that the first three criteria could be adequately addressed with a performance standard, whereas calibrator inaccuracy could not. As discussed below, FDA has concluded that the device should be classified into class II rather than class III as proposed.

5. One comment suggested that there are unanswered questions concerning virtually every biological measurement and questioned why the MCV should be emphasized by the Panel.

FDA and the Panel were concerned about the MCV because of its belief that unanswered theoretical questions existed at that time which prevented the establishment of a performance standard for the calibrator.

6. One comment questioned what the Panel meant by using the phrase "true numerical value for the MCV." The comment suggested that the phrase implied that the Panel knows of measurement methods superior to those employed by the manufacturers of calibrators. The comment suggested that statements relating to the inability to define a true numerical value for the MCV be removed unless the Panel identifies a measurement method that is both different from and superior to those currently employed.

FDA disagrees with this interpretation of the Panel's statements. At the time the recommendation was made, the Panel believed that the methods used to measure MCV were not sufficiently accurate. The Panel was not suggesting that a superior measurement method exists.

7. One comment suggested that sufficient information presently exists to establish a performance standard for a calibrator for MCV, so that the device could be classified into class II rather than class III as proposed. The comment provided two references indicating that leading authorities agree on a reference methodology for MCV measurement. The comment also noted that labeling requirements (21 CFR 809.10) require a statement of performance characteristics and that the good manufacturing practices regulation (21 CFR Part 820) requires maintenance of manufacturing records. The comment stated that these regulations provide performance standards for a product manufactured in compliance with good manufacturing practices. The comment noted that a proposed draft standard for chemistry calibrators could be submitted as a standard for a calibrator for cell indices by merely inserting the name of the appropriate analyte.

FDA agrees that sufficient information exists to establish a performance standard for measuring MCV. However, neither 21 CFR 809.10 nor 21 CFR Part 820 specify acceptable ranges for the performance characteristics of a calibrator for cell indices. A performance standard must specify those ranges. Despite the similarity in principle, FDA does not believe that a mere substitution of terminology would result in a performance standard for a calibrator for cell indices. FDA acknowledges, however, that the existing chemistry calibrator standard could serve as a basis for the development of a standard for a calibrator for cell indices and that the device should be classified into class II rather than class III as proposed.

8. One comment suggested that it is misleading to state that premarket approval will ensure the safety and effectiveness of a device to a greater extent than standards or general controls. The comment noted that for the first 30 months, these products will be subject only to general controls.

FDA agrees that it will be at least 30 months before the manufacturer of a calibrator will be required to demonstrate the safety and effectiveness of its product through a premarket approval application and that until that time, the product will be subject only to general controls.

9. One comment noted that Dr. van Assendelft did not state that the technology for the determination of cell indices has not advanced to the stage that true values can be assigned to these calibration materials for cell indices. The comment also noted that this statement is not correct.

FDA agrees that Dr. van Assendelft's remark was not accurately reported. Dr.

van Assendelft said that a standard for an MCV calibrator could not be written at that time because there were so many questions as to methods or methodology used in arriving at "a" value for MCV.

10. One comment stated that the reference provided, when correctly interpreted, were either not relevant to the issue of calibrators for cell indices, or not condemnatory of such calibrators.

FDA agrees that the references provided did not justify the proposed classification into class III. The final regulation classifies these calibrators into class II.

11. FDA received one comment agreeing with the proposed classification into class III.

On November 19, 1979, FDA held a public meeting of the Hematology Section of the Clinical Chemistry and Hematology Devices Panel to consider the comments received on the proposal to classify calibrators for cell indices into class III. At that meeting, a representative of Coulter Electronics Inc., presented his view that calibrators for cell indices should be classified into class II, rather than class III as proposed. A representative of Diagnostic Technology stated that classification into class III is appropriate, and that the cell size, shape, concentration, and other pertinent characteristics of calibrators for cell indices should be determined directly by classical reference methods, and that assay values for calibrators must be verifiable by manual methods prior to use. After considering the comments and additional testimony, the Section concluded that sufficient information exists to develop a performance standard for calibrators for cell indices and recommended that these devices be placed in class II rather than class III, as proposed.

Based upon the comments, the additional information and data submitted on this device, and the Section's recommendation, FDA has changed the classification of calibrators for cell indices in the final rule to class II rather than class III as proposed. The agency believes that the references submitted by one comment (Refs. 1 and 2) demonstrate that a reference methodology exists for the measurement of the cell indices that can serve as the basis for the development of a performance standard. Accordingly, the final regulation is changed to classify the device into class II. For the reasons stated in the general provisions for hematology and pathology devices published elsewhere in this issue of the Federal Register, FDA does not believe that it is necessary to issue a new proposal concerning this decision.

Persons who disagree with classifying calibrators for cell indices into class II may petition for reclassification of the device under Subpart C of Part 860 of the classification procedure regulation. Accordingly, the proposed regulation is being adopted with the changes noted.

On April 28, 1978, the agency terminated all of the device classification panels and reestablished them with the same functions, but with new names and with a new structure. FDA published notices of these changes in the Federal Register of May 19, 1978 (43 FR 21666, 21667, and 21668) and May 26, 1978 (43 FR 22672 and 22673). Further information regarding the device advisory committees and a list of their new names may be found in the preamble to the general provisions, published elsewhere in this issue of the Federal Register.

References

1. Gilmer, P. R. et al., "Calibration Methods for Automated Hematology Instruments," *American Journal of Clinical Pathology*, 68(1): 185–190, 1977.

2. Crosland-Taylor, P. J. et al., "Draft Protocol for Testing Calibration and Quality Control Material Used with Automatic Blood-counting Apparatus," *Clinical Laboratory Hematology*, 1:61–64, 1979.

Therefore, under the Federal Food, Drug, and Cosmetic Act (secs. 513, 701(a), 52 Stat. 1055, 90 Stat. 540–546 (21 U.S.C. 360c, 371(a))) and under authority delegated to him (21 CFR 5.1), the Commissioner of Food and Drugs is amending Part 864 in Subpart I by adding new § 864.8150, to read as follows:

§ 864.8150 Calibrator for cell indices.

(a) *Identification.* A calibrator for cell indices is a device that approximates whole blood or certain blood cells and that is used to set an instrument intended to measure mean cell volume (MCV), mean corpuscular hemoglobin (MCH), and mean corpuscular hemoglobin concentration (MCHC), or other cell indices. It is a suspension of particles or cells whose size, shape, concentration, and other characteristics have been precisely and accurately determined.

(b) *Classification.* Class II (performance standards).

Effective date. This regulation shall be effective October 14, 1980.

(Secs. 513, 701(a), 52 Stat. 1055, 90 Stat. 540–546 (21 U.S.C. 360c, 371(a)))

Dated: August 15, 1980.

William F. Randolph,

Acting Associate Commissioner for Regulatory Affairs.

[FR Doc. 80-27371 Filed 9-11-80; 8:45 am]

BILLING CODE 4110-03-M

---

21 CFR Part 864

[Docket No. 78N-1910]

Classification of Calibrators for Hemoglobin or Hematocrit Measurement

AGENCY: Food and Drug Administration.

ACTION: Final rule.

SUMMARY: The Food and Drug Administration (FDA) is issuing a final rule classifying calibrators for hemoglobin or hematocrit measurement into class II (performance standards). The effect of classifying a device into class II is to provide for the future development of one or more performance standards to assure the safety and effectiveness of the device. This action is being taken under the Medical Device Amendments of 1976.

EFFECTIVE DATE: October 14, 1980.

FOR FURTHER INFORMATION CONTACT: Kaiser Aziz, Bureau of Medical Devices (HFK-440), Food and Drug Administration, 8757 Georgia Ave., Silver Spring, MD 20910, 301-427-7550.

SUPPLEMENTARY INFORMATION: FDA published in the Federal Register of September 11, 1979 (44 FR 52950), a proposed regulation explaining the development of the proposed regulations classifying hematology and pathology devices, the medical device classification procedures, and the activities of the Hematology and Pathology Device Section of the Clinical Chemistry and Hematology Devices Panel (formerly the Hematology Device Classification Panel and the Pathology Device Classification Panel). FDA also published in that issue of the Federal Register (44 FR 53033) a proposed regulation to classify calibrators for hemoglobin and hematocrit measurement into class II (performance standards). A period of 60 days was provided for interested persons to submit written comments to FDA.

The following is a summary of the comments received on the proposal and the agency's response to them:

1. One comment objected to the identification of calibrators for hemoglobin or hematocrit measurement as materials whose "characteristics have been carefully determined". The comment suggested that the manner in which the characteristics are

determined is irrelevant and should be deleted. Discussion of this sort is more appropriate to the standards development process and at that time precision and accuracy will be considered rather than care.

FDA agrees that the calibrator material characteristics should be precisely and accurately determined rather than carefully determined. Accordingly, the identification has been modified to reflect this emphasis. FDA also agrees that the manner in which the characteristics are determined is appropriate to the standards development process.

2. One manufacturer agreed with the proposed classification into class II but stated that the Panel had not provided reasoning to prove that the labeling requirements and general controls are not adequate to control these products. The comment recommended that safety and effectiveness can be adequately insured by general controls (class I), including compliance with labeling and GMP's, until a standard is promulgated in final form.

FDA disagrees with this comment. The Panel recommended classification into class II because of the need to specify acceptable ranges for the precision and accuracy of these devices. General controls alone, including labeling requirements of 21 CFR 809.10, will not specify these ranges. FDA acknowledges, however, that until a standard is promulgated in final form, these devices will be regulated under general controls.

3. One comment suggested that the Panel had not solicited or considered information from industry sources on the state-of-the-art regarding these products.

FDA disagrees with this comment. The Panel meeting during which calibrators were discussed was announced in advance in the Federal Register. Manufacturers of calibrators were present at that meeting, made presentations, participated in the discussions, and they were also represented by the Panel's industry representative. Accordingly, the proposed regulation is being adopted with changes noted.

On April 28, 1978, the agency terminated all of the device classification panels and reestablished them with the same functions, but with new names and with a new structure. FDA published notices of these changes in the Federal Register of May 19, 1978 (43 FR 21666, 21667, and 21668) and May 26, 1978 (43 FR 22672 and 22673). Further information regarding the device advisory committees and a list of their new names may be found in the preamble to the general provisions, published elsewhere in this issue of the Federal Register.

Therefore, under the Federal Food, Drug, and Cosmetic Act (secs. 513, 701(a), 52 Stat. 1055, 90 Stat. 540–546 (21 U.S.C. 360c, 371(a))) and under authority delegated to him (21 CFR 5.1), the Commissioner of Food and Drugs is amending Part 864 in Subpart I by adding new § 864.8165, to read as follows:

§ 864.8165 Calibrator for hemoglobin or hematocrit measurement.

(a) *Identification.* A calibrator for hemoglobin or hematocrit measurement is a device that approximates whole blood, red blood cells, or a hemoglobin derivative and that is used to set instruments intended to measure hemoglobin, the hematocrit, or both. It is a material whose characteristics have been precisely and accurately determined.

(b) *Classification.* Class II (performance standards).

Effective date. This regulation shall be effective October 14, 1980.

(Secs. 513, 701(a), 52 Stat. 1055, 90 Stat. 540–546 (21 U.S.C. 360c, 371(a)))

Dated: August 15, 1980.

William F. Randolph,

Acting Associate Commissioner for Regulatory Affairs.

[FR Doc. 80-27372 Filed 9-11-80; 8:45 am]

BILLING CODE 4110-03-M

---

21 CFR Part 864

[Docket No. 78N-1911]

Classification of Calibrators for Platelet Counting

AGENCY: Food and Drug Administration.

ACTION: Final rule.

SUMMARY: The Food and Drug Administration (FDA) is issuing a final rule classifying calibrators for platelet counting into class II (performance standards). The effect of classifying a device into class II is to provide for the future development of one or more performance standards to assure the safety and effectiveness of the device. This action is being taken under the Medical Device Amendments of 1976.

EFFECTIVE DATE: October 14, 1980.

FOR FURTHER INFORMATION CONTACT: Kaiser Aziz, Bureau of Medical Devices (HFK-440), Food and Drug Administration, 8757 Georgia Ave., Silver Spring, MD 20910, 301-427-7550.

SUPPLEMENTARY INFORMATION: FDA published in the Federal Register of September 11, 1979 (44 FR 52950), a proposed regulation explaining the development of the proposed regulations classifying hematology and pathology devices, the medical device classification procedures, and the activities of the Hematology and Pathology Device Section of the Clinical Chemistry and Hematology Devices Panel (formerly the Hematology Device Classification Panel and the Pathology Device Classification Panel). FDA also published in that issue of the Federal Register (44 FR 53034) a proposed regulation to classify calibrators for platelet counting into class III (premarket approval). A period of 60 days was provided for interested persons to submit written comments to FDA.

The following is a summary of the comments received on the proposal and the agency's response to them:

1. One comment objected to the use of the word "fixed" in the identification, because its meaning is not sufficiently precise to be understood in this context.

FDA agrees with this comment. The identification has been modified to delete the term "fixed."

2. One comment objected to the statement that calibrators are materials whose "characteristics have been carefully determined". The comment suggested that precision and accuracy are more appropriate than care.

FDA agrees with this comment. The identification has been modified to emphasize precision and accuracy rather than care.

3. Two comments suggested further distinctions between different kinds of platelet calibrators. One comment suggested dividing these devices into whole blood calibrators and platelet-rich plasma calibrators. The comment suggested that platelet-rich plasma calibrators have been shown to be effective and should be placed in class II. Instruments that make platelet counts on whole blood samples must be calibrated with platelet-rich plasma calibrators. Another comment suggested a distinction between numerical calibration and size or threshold calibration, noting that both forms of calibration are required for accurate platelet counting.

FDA agrees that these distinctions are important. FDA believes that numerical and size calibration were indicated in the proposed identification. However, the identification has been modified to include whole blood calibrators. As discussed below, FDA has concluded that all calibratorts for platelet counting, including platelet-rich plasma calibrators, will be classified into class II.

4. Two comments objected to the statement that no calibration material has sufficient stability or reproducibility to serve as a calibrator for platelet counting. A reference (Ref. 1) was presented documenting the stability, accuracy, and reproducibility of calibration materials.

FDA agrees that there are materials with sufficient stability and reproducibility to serve as platelet calibrators.

5. Two comments objected to the statement that technology has not advanced to the stage that a true numerical value can be assigned to a material to be used as a platelet calibrator. The comments suggested that presently there are a number of methods by which platelet concentration may be measured, including an International Committee on Standards in Hematology (ICSH) proposed reference method (Ref. 2) for counting chamber hemacytometry. One comment noted that most of these methods do not require the use of calibrators and thus could be suitable reference methods. One comment noted that "the difficulties in platelet counting" referred to should not disqualify a technique of scientific measurement.

FDA agrees that methodologies exist whereby sufficiently accurate and precise numerical values may be assigned to calibration materials for platelet counting.

6. Two comments disagreed with the agency position that general controls or performance standards would not provide reasonable assurance of the safety and effectiveness of these devices. One comment stated that the benefits of the class III classification would not be available for 30 months. The comments suggested that the good manufacturing practices and labeling requirements as presently enforced by FDA would not be enhanced by requiring premarket approval.

FDA does not agree that general controls would ensure the safety and effectiveness of these devices. Acceptable ranges for the precision, accuracy, and stability of these products must be established by a performance standard. FDA does acknowledge that it would be 30 months before any benefits could be derived from the premarket approval process. In any event, the final regulation classifies the device into class II rather than class III as proposed.

7. One comment suggested that FDA had applied too broad an interpretation of the Federal Food, Drug, and Cosmetic Act regarding the use of premarket approval (class III) for ensuring safety and effectiveness. The comment suggested that the intent of the act is to use class III controls to protect the public against direct life-threatening hazards, and that platelet calibrators do not constitute such a threat.

FDA disagrees with the comment's interpretation of the act. The act specifies that devices that are "of substantial importance in preventing the impairment of human health" may, in FDA's discretion, be classified into class III. Further discussion of the classification of this device can be found in the agency response to comment number 11.

8. One comment stated that the reference in the proposed regulation (Ref. 1) to the lack of stability and reproducibility of platelet calibrators is no longer valid and should be deleted. It was suggested that those Panel members who concurred with this opinion be required to provide scientific evidence in support of their concurrence.

FDA agrees that the reference in the proposed regulation to the lack of stability and reproducibility of the device is no longer valid.

9. One comment suggested that there are a number of factors that could cause an inaccurate platelet count and if the platelet calibrator is to be placed into class III, then the other components of the platelet counting system should also be considered for class III.

FDA agrees that the platelet calibrator is but one of the components of the platelet counting system. However, its importance in establishing the accuracy of the platelet count should not be minimized. Under the final regulation, the platelet calibrator is classified into class II.

10. One comment noted that the error in the platelet count mentioned in Reference 2 of the proposed regulation was an isolated instance and is not typical of the performance of these devices.

FDA presented this reference as an example of the sort of error that could result from the use of a calibration material.

11. One comment objected to classifying calibrators for platelet counting into class III. The comment stated that sufficient information exists to establish performance standards that will ensure the safety and effectiveness of the device.

FDA agrees with the comment and is publishing a final regulation classifying the device into class II.

On November 19, 1979, FDA held a public meeting of the Hematology Devices Section of the Clinical Chemistry and Hematology Devices Panel. At the meeting, a representative of an industry group presented the view that calibrators for platelet counting should be classified into class II rather than class III as proposed.

Based on the comments, the presentation and additional information reviewed by the Section, and the Section's recommendation that the device be classified into class II, FDA has concluded that sufficient information exists to establish a performance standard for the device and is classifying the device into class II rather than class III as proposed.

For the reasons stated in the general provisions for hematology or pathology devices published elsewhere in this issue of the Federal Register, FDA does not believe that it is necessary to issue a new proposal concerning this decision. Persons who disagree with classifying calibrators for platelet counting into class II may petition for reclassification of the device under Subpart C of Part 860 of the classification procedure regulation. Accordingly, the proposed regulation is being adopted with the changes noted.

On April 28, 1978, the agency terminated all of the device classification panels and reestablished them with the same functions, but with new names and with a new structure. FDA published notices of these changes in the Federal Register of May 19, 1978 (43 FR 21666, 21667, and 21668) and May 26, 1978 (43 FR 22672 and 22673). Further information regarding the device advisory committees and a list of their new names may be found in the preamble to the general provisions, published elsewhere in this issue of the Federal Register.

List of References

1. Ross, D. W., L. Aysone, and M. Gulley, "Automated Platelet Counts: Accuracy, Precision, Range." Presented at Joint ASCP/CAP Meeting, Las Vegas, NE, October 29, 1979.

2. Proposed ICSH Reference Method for Counting Chamber Hemocytometry, "Presented at Meeting of ICSH Expert Panel on Blood Cell Sizing, Berlin, September 3–5, 1979.

Therefore, under the Federal Food, Drug, and Cosmetic Act (secs. 513, 701(a), 52 Stat. 1055, 90 Stat. 540–546 (21 U.S.C. 360c, 371(a))) and under authority delegated to him (21 CFR 5.1), the Commissioner of Food and Drugs is amending Part 864 in Subpart I by adding new § 864.8175, to read as follows:

§ 864.8175 Calibrator for platelet counting.

(a) *Identification.* A calibrator for platelet counting is a device that resembles platelets in plasma or whole blood and that is used to set a platelet counting instrument. It is a suspension

of particles or cells whose size, shape concentration, and other characteristics have been precisely and accurately determined.

(b) *Classification.* Class II (performance standards).

Effective date. This regulation shall be effective October 14, 1980.

(Secs. 513, 701(a), 52 Stat. 1055, 90 Stat. 540-546 (21 U.S.C. 360c, 371(a)))

Dated: August 15, 1980.

William F. Randolph,

Acting Associate Commissioner for Regulatory Affairs.

[FR Doc. 80-27373 Filed 9-11-80; 8:45 am]

BILLING CODE 4110-03-M

21 CFR Part 864

[Docket No. 78N-1912]

Classification of Calibrators for Red Cell and White Cell Counting

AGENCY: Food and Drug Administration.

ACTION: Final rule.

SUMMARY: The Food and Drug Administration (FDA) is issuing a final rule classifying calibrators for red cell and white cell counting into class II (performance standards). The effect of classifying a device into class II is to provide for the future development of one or more performance standards to assure the safety and effectiveness of the device. This action is being taken under the Medical Device Amendments of 1976.

EFFECTIVE DATE: October 14, 1980.

FOR FURTHER INFORMATION CONTACT: Kaiser Aziz, Bureau of Medical Devices (HFK-440), Food and Drug Administration, 8757 Georgia Ave., Silver Spring, MD 20910, 301-427-7550.

SUPPLEMENTARY INFORMATION: FDA published in the Federal Register of September 11, 1979 (44 FR 52950), a proposed regulation explaining the development of the proposed regulations classifying hematology and pathology devices, the medical device classification procedures, and the activities of the Hematology and Pathology Device Section of the Clinical Chemistry and Hematology Devices Panel (formerly the Hematology Device Classification Panel and the Pathology Device Classification Panel). FDA also published in that issue of the Federal Register (44 FR 53035) a proposed regulation to classify calibrators for red cell and white cell counting into class II (performance standards). A period of 60 days was provided for interested persons to submit written comments to FDA.

The following is a summary of the comments received on the proposal and the agency's response to them:

1. One comment objected to the identification of calibrators for red and white cell counting as materials whose "characteristics have been carefully determined." The comment suggested that a discussion of the manner in which the characteristics are determined is irrelevant and should be deleted. Discussion of this sort is more appropriate to the standards development process and at that time precision and accuracy will be considered rather than care.

FDA agrees that the materials' characteristics should be precisely and accurately determined, rather than carefully determined. Accordingly, the identification has been modified to reflect this emphasis. FDA also agrees that a discussion of the manner in which the characteristics are determined is appropriate to the standards development process.

2. One comment noted that the technology for assigning a true value to red cell and white cell calibrators was developed in the absence of a standard. The comment stated that the Panel had not presented any evidence of hazards which are attendant to the use of such products. The comment also stated that the Panel should present evidence to show that current labeling and GMP requirements are not adequate to ensure the safety and effectiveness of these products. The comment recommended that the controls of class I are adequate to ensure the safety and effectiveness of these products until a standard is promulgated in final form.

FDA disagrees with this comment. The Panel presented the risk of misdiagnosis and inappropriate therapy due to inaccurate data from an improperly calibrated cell counting instrument. The Panel also stated that a performance standard prescribing acceptable ranges for the accuracy and precision of these devices would be sufficient to ensure their safety and effectiveness. Current labeling and GMP requirements would not specify these acceptable ranges. Therefore, a performance standard is necessary. FDA acknowledges that until a performance standard is promulgated in final form, these calibrators will be regulated under general controls.

3. FDA received one comment supporting the proposed classification into class II and recommending that the assay of the calibrator be verifiable by a second methodology to ensure the safety and effectiveness of the calibrator prior to its usage in the laboratory.

Accordingly, the proposed regulation is being adopted with the changes noted.

On April 28, 1978, the agency terminated all of the device classification panels and reestablished them with the same functions, but with new names and with a new structure. FDA published notices of these changes in the Federal Register of May 19, 1978 (43 FR 21666, 21667, and 21668) and May 26, 1978 (43 FR 22672 and 22673). Further information regarding the device advisory committees and a list of their new names may be found in the preamble to the general provisions, published elsewhere in this issue of the Federal Register.

Therefore, under the Federal Food, Drug, and Cosmetic Act (secs. 513, 701(a), 52 Stat. 1055, 90 Stat. 540-546 (21 U.S.C. 360c, 371(a))) and under authority delegated to him (21 CFR 5.1), the Commissioner of Food and Drugs is amending Part 864 in Subpart I by adding new § 864.8185, to read as follows:

§ 864.8185 Calibrator for red cell and white cell counting.

(a) *Identification.* A calibrator for red cell and white cell counting is a device that resembles red or white blood cells and that is used to set instruments intended to count red cells, white cells, or both. It is a suspension of particles or cells whose size, shape, concentration, and other characteristics have been precisely and accurately determined.

(b) *Classification.* Class II (performance standards).

Effective date. This regulation shall be effective October 14, 1980.

(Secs. 513, 701(a), 52 Stat. 1055, 90 Stat. 540-546 (21 U.S.C. 360c, 371(a)))

Dated: August 15, 1980.

William F. Randolph,

Acting Associate Commissioner for Regulatory Affairs.

[FR Doc. 80-27374 Filed 9-11-80; 8:45 am]

BILLING CODE 4110-03-M

21 CFR Part 864

[Docket No. 78N-1913]

Classification of Blood Cell Diluents

AGENCY: Food and Drug Administration.

ACTION: Final rule.

SUMMARY: The Food and Drug Administration (FDA) is issuing a final rule classifying blood cell diluents into class I (general controls). The effect of classifying a device into class I is to require that the device meet only the general controls applicable to all devices. This action is being taken under

the Medical Device Amendments of 1976.

EFFECTIVE DATE: October 14, 1980.

FOR FURTHER INFORMATION CONTACT: Kaiser Aziz, Bureau of Medical Devices (HFK-440), Food and Drug Administration, 8757 Georgia Ave., Silver Spring, MD 20910, 301-427-7550.

SUPPLEMENTARY INFORMATION: FDA published in the Federal Register of September 11, 1979 (44 FR 52950), a proposed regulation explaining the development of the proposed regulations classifying hematology and pathology devices, the medical device classification procedures, and the activities of the Hematology and Pathology Device Section of the Clinical Chemistry and Hematology Devices Panel (formerly the Hematology Device Classification Panel and the Pathology Device Classification Panel). FDA also published in that issue of the Federal Register (44 FR 53036) a proposed regulation to classify blood cell diluents into class I (general controls). A period of 60 days was provided for interested persons to submit written comments to FDA.

The following is a summary of the comments received on the proposal and the agency's response to them:

1. One comment endorsed the proposed classification into class I and the reasoning set forth in the proposed regulation.

FDA is classifying the device into class I as proposed.

One manufacturer suggested that blood cell diluents be placed in class II. The comment noted that these products are critical to the effective and reliable use of cell counting devices, calibrators, and quality control mixtures, all of which were placed in class II or class III. The comment suggested that the Panel recommendation was made on the basis of data concerning sodium azide diluents, whose performance was unchanging and reliable. The comment notes that in the past 2 years there has been a shift to azide-free diluents. The resulting changes in preservatives and formula modifications have affected certain cell indices such as the mean corpuscular volume (MCV). The comment cites an article by Fujii, et al. (Ref. 1), demonstrating that different preservatives affect cell shape in various ways. The use of different diluents have resulted in 10-30μ^3 differences between the MCV's of commercial control cells measured with impedance type counters and those measured with optical type counters. The comment suggested that placing these diluents into class II would not create hardship for the manufacturer or adversely affect the economics of their production and control.

FDA disagrees with this comment. FDA does not believe that it is necessary to place blood cell diluents in class II. The effects of diluents should be addressed as part of the standards development process for automated cell counters. Accordingly, the proposed regulation is being adopted without change.

Reference

1. Fujii, T., T. Sato, A. Tamura, M. Wakatsuki, and Y. Kanoho, "Shape Changes of Human Erythrocytes Induced by Various Amphipathic Drugs Acting on the Membrane of the Intact Cells," *Biochemical Pharmacology*, 28:613-620, 1979.

On April 28, 1978, the agency terminated all of the device classification panels and reestablished them with the same functions, but with new names and with a new structure. FDA published notices of these changes in the Federal Register of May 19, 1978 (43 FR 21666, 21667, and 21668) and May 26, 1978 (43 FR 22672 and 22673). Further information regarding the device advisory committees and a list of their new names may be found in the preamble to the general provisions, published elsewhere in this issue of the Federal Register.

Therefore, under the Federal Food, Drug, and Cosmetic Act (secs. 513, 701(a), 52 Stat. 1055, 90 Stat. 540-546 (21 U.S.C. 360c, 371(a))) and under authority delegated to him (21 CFR 5.1), the Commissioner of Food and Drugs is amending Part 864 in Subpart I by adding new § 864.8200, to read as follows:

§ 864.8200 Blood cell diluent.

(a) *Identification.* A blood cell diluent is a device used to dilute blood for further testing, such as blood cell counting.

(b) *Classification.* Class I (general controls).

Effective date. This regulation shall be effective October 14, 1980.

(Secs. 513, 701(a), 52 Stat. 1055, 90 Stat. 540-546 (21 U.S.C. 360c, 371(a)))

Dated: August 15, 1980.

William F. Randolph,

Acting Associate Commissioner for Regulatory Affairs.

[FR Doc. 80-27375 Filed 9-11-80; 8:45 am]

BILLING CODE 4110-03-M

---

21 CFR Part 864

[Docket No. 78N-1914]

Classification of Lymphocyte Separation Media

AGENCY: Food and Drug Administration.

ACTION: Final rule.

SUMMARY: The Food and Drug Administration (FDA) is issuing a final rule classifying lymphocyte separation media into class I (general controls). The effect of classifying a device into class I is to require that the device meet only the general controls applicable to all devices. This action is being taken under the Medical Device Amendments of 1976.

EFFECTIVE DATE: October 14, 1980.

FOR FURTHER INFORMATION CONTACT: Kaiser Aziz, Bureau of Medical Devices (HFK-440), Food and Drug Administration, 8757 Georgia Ave., Silver Spring, MD 20910, 301-427-7550.

SUPPLEMENTARY INFORMATION: FDA published in the Federal Register of September 11, 1979 (44 FR 52950), a proposed regulation explaining the development of the proposed regulations classifying hematology and pathology devices, the medical device classification procedures, and the activities of the Hematology and Pathology Device Section of the Clinical Chemistry and Hematology Devices Panel (formerly the Hematology Device Classification Panel and the Pathology Device Classification Panel). FDA also published in that issue of the Federal Register (44 FR 53037) a proposed regulation to classify lymphocyte separation media into class I (general controls). A period of 60 days was provided for interested persons to submit written comments to FDA.

No comments have been received regarding the proposed regulation to classify this device. Accordingly, the proposed regulation is being adopted without change.

On April 28, 1978, the agency terminated all of the device classification panels and reestablished them with the same functions, but with new names and with a new structure. FDA published notices of these changes in the Federal Register of May 19, 1978 (43 FR 21666, 21667, and 21668) and May 26, 1978 (43 FR 22672 and 22673). Further information regarding the device advisory committees and a list of their new names may be found in the preamble to the general provisions, published elsewhere in this issue of the Federal Register.

Therefore, under the Federal Food, Drug, and Cosmetic Act (secs. 513, 701(a), 52 Stat. 1055, 90 Stat. 540-546 (21 U.S.C. 360c, 371(a))) and under authority delegated to him (21 CFR 5.1), the Commissioner of Food and Drugs is amending Part 864 in Subpart I by adding new § 864.8500, to read as follows:

§ 864.8500 Lymphocyte separation medium.

(a) *Identification.* A lymphocyte separation medium is a device used to isolate lymphocytes from whole blood.

(b) *Classification.* Class I (general controls).

Effective date. This regulation shall be effective October 14, 1980.

(Secs. 513, 701(a), 52 Stat. 1055, 90 Stat. 540–546 (21 U.S.C. 360c, 371(a)))

Dated: August 15, 1980.

William F. Randolph,

Acting Associate Commissioner for Regulatory Affairs.

[FR Doc. 80-27376 Filed 9-11-80; 8:45 am]

BILLING CODE 4110-03-M

---

21 CFR Part 864

[Docket No. 78N-1915]

Classification of Red Cell Lysing Reagents

AGENCY: Food and Drug Administration.

ACTION: Final rule.

SUMMARY: The Food and Drug Administration (FDA) is issuing a final rule classifying red cell lysing reagents into class I (general controls). The effect of classifying a device into class I is to require that the device meet only the general controls applicable to all devices. This action is being taken under the Medical Device Amendments of 1976.

EFFECTIVE DATE: October 14, 1980.

FOR FURTHER INFORMATION CONTACT: Kaiser Aziz, Bureau of Medical Devices (HFK-440), Food and Drug Administration, 8757 Georgia Ave., Silver Spring, MD 20910, 301-427-7550.

SUPPLEMENTARY INFORMATION: FDA published in the Federal Register of September 11, 1979 (44 FR 52950), a proposed regulation explaining the development of the proposed regulations classifying hematology and pathology devices, the medical device classification procedures, and the activities of the Hematology and Pathology Device Section of the Clinical Chemistry and Hematology Devices Panel (formerly the Hematology Device Classification Panel and the Pathology Device Classification Panel). FDA also published in that issue of the Federal Register (44 FR 53037) a proposed regulation to classify red cell lysing reagents into class I (general controls). A period of 60 days was provided for interested persons to submit written comments to FDA.

Two comments were received on the proposal. The following is a summary of these comments and the agency's response to them:

1. One comment noted that the lysing reagent does not physically remove red blood cells from the solution. Cellular debris remains suspended in the solution or it is dissolved. The comment suggested that the concept of red cell removal be deleted from the identification.

FDA agrees with this comment. The identification has been modified to correct the misstatement in the proposed regulation.

2. FDA received one comment in support of the Panel's recommendation and in agreement with the reasoning set forth in the proposed regulation.

Accordingly, the proposed regulation is being adopted with the changes noted.

On April 28, 1978, the agency terminated all of the device classification panels and reestablished them with the same functions, but with new names and with a new structure. FDA published notices of these changes in the Federal Register of May 19, 1978 (43 FR 21666, 21667, and 21668) and May 26, 1978 (43 FR 22672 and 22673). Further information regarding the device advisory committees and a list of their new names may be found in the preamble to the general provisions, published elsewhere in this issue of the Federal Register.

Therefore, under the Federal Food, Drug, and Cosmetic Act (secs. 513, 701(a), 52 Stat. 1055, 90 Stat. 540–546 (21 U.S.C. 360c, 371(a))) and under authority delegated to him (21 CFR 5.1), the Commissioner of Food and Drugs is amending Part 864 in Subpart I by adding new § 864.8540, to read as follows:

§ 864.8540 Red cell lysing reagent.

(a) *Identification.* A red cell lysing reagent is a device used to lyse (destroy) red blood cells for hemoglobin determinations or aid in the counting of white blood cells.

(b) *Classification.* Class I (general controls).

Effective date. This regulation shall be effective October 14, 1980.

(Secs. 513, 701(a), 52 Stat. 1055, 90 Stat. 540–546 (21 U.S.C. 360c, 371(a)))

Dated: August 15, 1980.

William F. Randolph,

Acting Associate Commissioner for Regulatory Affairs.

[FR Doc. 80-27377 Filed 9-11-80; 8:45 am]

BILLING CODE 4110-03-M

---

21 CFR Part 864

[Docket No. 78N-1916]

Classification of Hematology Quality Control Mixtures

AGENCY: Food and Drug Administration.

ACTION: Final rule.

SUMMARY: The Food and Drug Administration (FDA) is issuing a final rule classifying hematology quality control mixtures into class II (performance standards). The effect of classifying a device into class II is to provide for the future development of one or more performance standards to assure the safety and effectiveness of the device. This action is being taken under the Medical Device Amendments of 1976.

EFFECTIVE DATE: October 14, 1980.

FOR FURTHER INFORMATION CONTACT: Kaiser Aziz, Bureau of Medical Devices (HFK-440), Food and Drug Administration, 8757 Georgia Ave., Silver Spring, MD 20910, 301-427-7550.

SUPPLEMENTARY INFORMATION: FDA published in the Federal Register of September 11, 1979 (44 FR 52950), a proposed regulation explaining the development of the proposed regulations classifying hematology and pathology devices, the medical device classification procedures, and the activities of the Hematology and Pathology Device Section of the Clinical Chemistry and Hematology Device Panel (formerly the Hematology Device Classification Panel and Pathology Device Classification Panel). FDA also published in that issue of the Federal Register (44 FR 53038) a proposed regulation to classify hematology quality control mixtures into class II (performance standards). A period of 60 days was provided for interested persons to submit written comments to FDA.

The following is a summary of the comments received on the proposal and the agency's response to them:

1. One comment stated that the proposed class II classification is not necessary to ensure the safety and effectiveness of these products. The comment disputed the view that a laboratory would not know that its reagents had deteriorated or that an instrument was malfunctioning. The comment noted that the instrument provides warnings to the user independent of the quality control mixture. The comment recommended that FDA comment on current labeling deficiencies concerning system malfunction and customer alerts. The comment admitted that performance

standards may be necessary for assays carried our entirely by manual methods but the quality control mixtures used or recommended for use with automated systems may be adequately regulated under thea class I provisions.

FDA disagrees with this comment. FDA believes that a defective quality control material can mask instrument malfunction or reagent deterioration. If it were true, as the comment asserted, that sufficient warnings are provided by the instrument, quality control mixtures would not be required. This is not the case. FDA does not believe it is necessary to comment on current labeling concerning instrument malfunctions and customer alerts. FDA believes that quality control materials are marketed for use in both manual and automated procedures and that class II is appropriate to use in both types of procedures. FDA does not believe that general controls will adequately regulate quality control materials because general controls do not specify acceptable ranges for the precision and accuracy of these materials. This specification can be accomplished only through performance standards. FDA acknowledges, however, that until a performance standard is promulgated in final form, these devices will be regulated as class I devices.

2. One comment noted that the Panel based its recommendation upon its members' clinical experience and did not consider the comments of the industry or product users.

FDA disagrees with this comment. The agenda of the Hematology Devices Section of the Clinical Chemistry and Hematology Devices Panel were announced in the Federal Register, the manufacturers and the public were afforded an opportunity to participate in these meetings, and their interests were also represented by industry and consumer representatives at the Panel meetings.

3. FDA received one comment in support of the proposed class II classification. The comment also stated that a performance standard for these devices should provide for an alternative method for the verification of the accuracy of the assay values.

FDA will consider this matter when it establishes a performance standard for these devices.

Accordingly, FDA is adopting the proposed regulation without change.

On April 28, 1978, the agency terminated all of the device classification panels and reestablished them with the same functions, but with new names and with a new structure. FDA published notices of these changes in the Federal Register of May 19, 1978 (43 FR 21666, 21667, and 21668) and May 26, 1978 (43 FR 22672 and 22673). Further information regarding the device advisory committees and a list of their new names may be found in the preamble to the general provisions, published elsewhere in this issue of the Federal Register.

Therefore, under the Federal Food, Drug, and Cosmetic Act (secs. 513, 701(a), 52 Stat. 1055, 90 Stat. 540–546 (21 U.S.C. 360c, 371(a))) and under authority delegated to him (21 CFR 5.1), the Commissioner of Food and Drugs is amending Part 864 in Subpart I by adding new § 864.8625, to read as follows:

§ 864.8625 Hematology quality control mixture.

(a) *Identification.* A hematology quality control mixture is a device used to ascertain the accuracy and precision of manual, semiautomated, and automated determinations of cell parameters such as white cell count (WBC), red cell count (RBC), platelet count (PLT), hemoglobin, hematocrit (HCT), mean corpuscular volume (MCV), mean corpuscular hemoglobin (MCH), and mean corpuscular hemoglobin concentration (MCHC).

(b) *Classification.* Class II (performance standards).

Effective date. This regulation shall be effective October 14, 1980.

(Secs. 513, 701(a), 52 Stat. 1055, 90 Stat. 540–546 (21 U.S.C. 360c, 371(a)))

Dated: August 15, 1980.

William F. Randolph,

Acting Associate Commissioner for Regulatory Affairs.

[FR Doc. 80-27378 Filed 9-11-80; 8:45 am]
BILLING CODE 4110-03-M

---

21 CFR Part 864

[Docket No. 78N-1917]

Classification of Russell Viper Venom Reagents

AGENCY: Food and Drug Administration.

ACTION: Final rule.

SUMMARY: The Food and Drug Administration (FDA) is issuing a final rule classifying Russell viper venom reagents into class I (general controls). The effect of classifying a device into class I is to require that the device meet only the general controls applicable to all devices. This action is being taken under the Medical Device Amendments of 1976.

EFFECTIVE DATE: October 14, 1980.

FOR FURTHER INFORMATION CONTACT: Kaiser Aziz, Bureau of Medical Devices (HFK-440), Food and Drug Administration, 8757 Georgia Ave., Silver Spring, MD 20910, 301-427-7550.

SUPPLEMENTARY INFORMATION: FDA published in the Federal Register of September 11, 1979 (44 FR 52950), a proposed regulation explaining the development of the proposed regulations classifying hematology and pathology devices, the medical device classification procedures, and the activities of the Hematology and Pathology Device Section of the Clinical Chemistry and Hematology Devices Panel (formerly the Hematology Device Classification Panel and the Pathology Device Classification Panel). FDA also published in that issue of the Federal Register (44 FR 53039) a proposed regulation to classify Russell viper venom reagents into class I (general controls). A period of 60 days was provided for interested persons to submit written comments to FDA.

No comments have been received regarding the proposed regulation to classify this device. Accordingly, the proposed regulation is being adopted without change.

On April 28, 1978, the agency terminated all of the device classification panels and reestablished them with the same functions, but with new names and with a new structure. FDA published notices of these changes in the Federal Register of May 19, 1978 (43 FR 21666, 21667, and 21668) and May 26, 1978 (43 FR 22672 and 22673). Further information regarding the device advisory committees and a list of their new names may be found in the preamble to the general provisions, published elsewhere in this issue of the Federal Register.

Therefore, under the Federal Food, Drug, and Cosmetic Act (secs. 513, 701(a), 52 Stat. 1055, 90 Stat. 540–546 (21 U.S.C. 360c, 371(a))) and under authority delegated to him (21 CFR 5.1), the Commissioner of Food and Drugs is amending Part 864 in Subpart I by adding new § 864.8950, to read as follows:

§ 864.8950 Russell viper venom reagent.

(a) *Identification.* Russell viper venom reagent is a device used to determine the cause of an increase in the prothrombin time.

(b) *Classification.* Class I (general controls).

Effective date. This regulation shall be effective October 14, 1980.

(Secs. 513, 701(a), 52 Stat. 1055, 90 Stat. 540–546 (21 U.S.C. 360c, 371(a)))

Dated: August 15, 1980.

William F. Randolph,

Acting Associate Commissioner for Regulatory Affairs.

[FR Doc. 80-27379 Filed 9-11-80; 8:45 am]

BILLING CODE 4110-03-M

---

21 CFR Part 864

[Docket No. 78N-1918]

Classification of Blood Bank Supplies

AGENCY: Food and Drug Administration.

ACTION: Final rule.

SUMMARY: The Food and Drug Administration (FDA) is issuing a final rule classifying blood bank supplies into class I (general controls). The effect of classifying a device into class I is to require that the device meet only the general controls applicable to all devices. This section is being taken under the Medical Device Amendments of 1976.

EFFECTIVE DATE: October 14, 1980.

FOR FURTHER INFORMATION CONTACT: Kaiser Aziz, Bureau of Medical Devices (HFK-440), Food and Drug Administration, 8757 Georgia Ave., Silver Spring, MD 20910, 301-427-7550.

SUPPLEMENTARY INFORMATION: FDA published in the Federal Register of September 11, 1979 (44 FR 52950), a proposed regulation explaining the development of the proposed regulations classifying hematology and pathology devices, the medical device classification procedures, and the activities of the Hematology and Pathology Device Section of the Clinical Chemistry and Hematology Devices Panel (formerly the Hematology Device Classification Panel and the Pathology Device Classification Panel). FDA also published in that issue of the Federal Register (44 FR 53040) a proposed regulation to classify blood bank supplies into class I (general controls). A period of 60 days was provided for interested persons to submit written comments to FDA.

No comments have been received regarding the proposed regulation to classify this device. Accordingly, the proposed regulation is being adopted with a minor clarifying change.

On April 28, 1978, the agency terminated all of the device classification panels and reestablished them with the same functions, but with new names and with a new structure. FDA published notices of these changes in the Federal Register of May 19, 1978 (43 FR 21666, 21667, and 21668) and May 26, 1978 (43 FR 22672 and 22673). Further information regarding the device advisory committees and a list of their new names may be found in the preamble to the general provisions, published elsewhere in this issue of the Federal Register.

Therefore, under the Federal Food, Drug, and Cosmetic Act (secs. 513, 701(a), 52 Stat. 1055, 90 Stat. 540-546 (21 U.S.C. 360c, 371(a))) and under authority delegated to him (21 CFR 5.1), the Commissioner of Food and Drugs is amending Part 864 in Subpart J by adding new § 864.9050, to read as follows:

Subpart J—Products Used in Establishments That Manufacture Blood and Blood Products

§ 864.9050 Blood bank supplies.

(a) *Identification.* Blood bank supplies are general purpose devices intended for in vitro use in blood banking. This generic type of device includes products such as blood bank pipettes, blood grouping slides, blood typing tubes, blood typing racks, and cold packs for antisera reagents. The device does not include articles that are licensed by the Bureau of Biologics of the Food and Drug Administration.

(b) *Classification.* Class I (general controls).

Effective date. This regulation shall be effective October 14, 1980.

(Secs. 513, 701(a), 52 Stat. 1055, 90 Stat. 540-546 (21 U.S.C. 360c, 371(a)))

Dated: August 15, 1980.

William F. Randolph,

Acting Associate Commissioner for Regulatory Affairs.

[FR Doc. 80-27380 Filed 9-11-80; 8:45 am]

BILLING CODE 4110-03-M

---

21 CFR Part 864

[Docket No. 78N-1919]

Classification of Empty Containers for the Collection and Processing of Blood and Blood Components

AGENCY: Food and Drug Administration.

ACTION: Final rule.

SUMMARY: The Food and Drug Administration (FDA) is issuing a final rule classifying empty containers for the collection and processing of blood and blood components into class II (performance standards). The effect of classifying a device into class II is to provide for the future development of one or more performance standards to assure the safety and effectiveness of the device. This action is being taken under the Medical Device Amendments of 1976.

EFFECTIVE DATE: October 14, 1980.

FOR FURTHER INFORMATION CONTACT: Kaiser Aziz, Bureau of Medical Devices (HFK-440), Food and Drug Administration, 8757 Georgia Ave., Silver Spring, MD 20910, 301-427-7550.

SUPPLEMENTARY INFORMATION: FDA published in the Federal Register of September 11, 1979 (44 FR 52950), a proposed regulation explaining the development of the proposed regulations classifying hematology and pathology devices, the medical device classification procedures, and the activities of the Hematology and Pathology Device Section of the Clinical Chemistry and Hematology Devices Panel (formerly the Hematology Device Classification Panel and the Pathology Device Classification Panel). FDA also published in that issue of the Federal Register (44 FR 53041) a proposed regulation to classify empty containers for the collection and processing of blood and blood components into class II (performance standards). A period of 60 days was provided for interested persons to submit written comments to FDA.

No comments have been received regarding the proposed regulation to classify this device. Accordingly, the proposed regulation is being adopted with a minor clarifying change.

On April 28, 1978, the agency terminated all of the device classification panels and reestablished them with the same functions, but with new names and with a new structure. FDA published notices of these changes in the Federal Register of May 19, 1978 (43 FR 21666, 21667, and 21668) and May 26, 1978 (43 FR 22672 and 22673). Further information regarding the device advisory committees and a list of their new names may be found in the preamble to the general provisions, published elsewhere in this issue of the Federal Register.

Therefore, under the Federal Food, Drug, and Cosmetic Act (secs. 513, 701(a), 52 Stat. 1055, 90 Stat. 540-546 (21 U.S.C. 360c, 371(a))) and under authority delegated to him (21 CFR 5.1), the Commissioner of Food and Drugs is amending Part 864 in Subpart J by adding new § 864.9100, to read as follows:

§ 864.9100 Empty container for the collection and processing of blood and blood components.

(a) *Identification.* An empty container for the collection and processing of blood and blood components is a device intended for medical purposes that is an empty plastic bag or plastic or glass bottle used to collect, store, or transfer blood and blood components for further processing.

(b) *Classification.* Class II (performance standards).

Effective date. This regulation shall be effective October 14, 1980.

(Secs. 513, 701(a), 52 Stat. 1055, 90 Stat. 540–546 (21 U.S.C. 360c, 371(a)))

Dated: August 15, 1980.

William F. Randolph,

Acting Associate Commissioner for Regulatory Affairs.

[FR Doc. 80-27381 Filed 9-11-80; 8:45 am]

BILLING CODE 4110-03-M

---

21 CFR Part 864

[Docket No. 78N-1920]

Classification of Vacuum-Assisted Blood Collection Systems

AGENCY: Food and Drug Administration.

ACTION: Final rule.

SUMMARY: The Food and Drug Administration (FDA) is issuing a final rule classifying vacuum-assisted blood collection systems into class I (general controls). The effect of classifying a device into class I is to require that the device meet only the general controls applicable to all devices. This action is being taken under the Medical Device Amendments of 1976.

EFFECTIVE DATE: October 14, 1980.

FOR FURTHER INFORMATION CONTACT: Kaiser Aziz, Bureau of Medical Devices (HFK-440), Food and Drug Administration, 8757 Georgia Ave., Silver Spring, MD 20910, 301-427-7550.

SUPPLEMENTARY INFORMATION: FDA published in the Federal Register of September 11, 1979 (44 FR 52950), a proposed regulation explaining the development of the proposed regulations classifying hematology and pathology devices, the medical device classification procedures, and the activities of the Hematology and Pathology Device Section of the Clinical Chemistry and Hematology Devices Panel (formerly the Hematology Device Classification Panel and the Pathology Device Classification Panel). FDA also published in that issue of the Federal Register (44 FR 53042) a proposed regulation to classify vacuum-assisted blood collection systems into class I (general controls). A period of 60 days was provided for interested persons to submit written comments to FDA.

No comments have been received regarding the proposed regulation to classify this device. Accordingly, the proposed regulation is being adopted without change.

On April 28, 1978, the agency terminated all of the device classification panels and reestablished them with the same functions, but with new names and with a new structure. FDA published notices of these changes in the Federal Register of May 19, 1978 (43 FR 21666, 21667, and 21668) and May 26, 1978 (43 FR 22672 and 22673). Further information regarding the device advisory committees and a list of their new names may be found in the preamble to the general provisions, published elsewhere in this issue of the Federal Register.

Therefore, under the Federal Food, Drug, and Cosmetic Act (secs. 513, 701(a), 52 Stat. 1055, 90 Stat. 540–546 (21 U.S.C. 360c, 371(a))) and under authority delegated to him (21 CFR 5.1), the Commissioner of Food and Drugs is amending Part 864 in Subpart J by adding new § 864.9125, to read as follows:

§ 864.9125 Vacuum-assisted blood collection system.

(a) *Identification.* A vacuum-assisted blood collection system is a device intended for medical purposes that uses a vacuum to draw blood for subsequent reinfusion.

(b) *Classification.* Class I (general controls).

Effective date. This regulation shall be effective October 14, 1980.

(Secs. 513, 701(a), 52 Stat. 1055, 90 Stat. 540–546 (21 U.S.C. 360c, 371(a)))

Dated: August 15, 1980.

William F. Randolph,

Acting Associate Commissioner for Regulatory Affairs.

[FR Doc. 80-27382 Filed 9-11-80; 8:45 am]

BILLING CODE 4110-03-M

---

21 CFR Part 864

[Docket No. 78N-1921]

Classification of Processing Systems for Frozen Blood

AGENCY: Food and Drug Administration.

ACTION: Final rule.

SUMMARY: The Food and Drug Administration (FDA) is issuing a final rule classifying processing systems for frozen blood into class II (performance standards). The effect of classifying a device into class II is to provide for the future development of one or more performance standards to assure the safety and effectiveness of the device. This action is being taken under the Medical Device Amendments of 1976.

EFFECTIVE DATE: October 14, 1980.

FOR FURTHER INFORMATION CONTACT: Kaiser Aziz, Bureau of Medical Devices (HFK-440), Food and Drug Administration, 8757 Georgia Ave., Silver Spring, MD 20910, 301-427-7550.

SUPPLEMENTARY INFORMATION: FDA published in the Federal Register of September 11, 1979 (44 FR 52950), a proposed regulation explaining the development of the proposed regulations classifying hematology and pathology devices, the medical device classification procedures, and the activities of the Hematology and Pathology Device Section of the Clinical Chemistry and Hematology Devices Panel (formerly the Hematology Device Classification Panel and the Pathology Device Classification Panel). FDA also published in that issue of the Federal Register (44 FR 53043) a proposed regulation to classify processing systems for frozen blood into class II (performance standards). A period of 60 days was provided for interested persons to submit written comments to FDA.

No comments have been received regarding the proposed regulation to classify this device. Accordingly, the proposed regulation is being adopted without change.

On April 28, 1978, the agency terminated all of the device classification panels and reestablished them with the same functions, but with new names and with a new structure. FDA published notices of these changes in the Federal Register of May 19, 1978 (43 FR 21666, 21667, and 21668) and May 26, 1978 (43 FR 22672 and 22673). Further information regarding the device advisory committees and a list of their new names may be found in the preamble to the general provisions, published elsewhere in this issue of the Federal Register.

Therefore, under the Federal Food, Drug, and Cosmetic Act (secs. 513, 701(a), 52 Stat. 1055, 90 Stat. 540–546 (21 U.S.C. 360c, 371(a))) and under authority delegated to him (21 CFR 5.1), the Commissioner of Food and Drugs is amending Part 864 in Subpart J by adding new § 864.9145, to read as follows:

§ 864.9145 Processing system for frozen blood.

(a) *Identification.* A processing system for frozen blood is a device used to glycerolize red blood cells prior to freezing to minimize hemolysis (disruption of the red cell membrane accompanied by the release of hemoglobin) due to freezing and thawing of red blood cells and to deglycerolize and wash thawed cells for subsequent reinfusion.

(b) *Classification.* Class II (performance standards).

Effective date. This regulation shall be effective October 14, 1980.

(Secs. 513, 701(a), 52 Stat. 1055, 90 Stat. 540–546 (21 U.S.C. 360c, 371(a)))

Dated: August 15, 1980.

William F. Randolph,

Acting Associate Commissioner for Regulatory Affairs.

[FR Doc. 80-27383 Filed 9-11-80; 8:45 am]

BILLING CODE 4110-03-M

---

21 CFR Part 864

[Docket No. 78N-1922]

Classification of Blood Group Substances of Nonhuman Origin for in Vitro Diagnostic Use

AGENCY: Food and Drug Administration.

ACTION: Final rule

SUMMARY: The Food and Drug Administration (FDA) is issuing a final rule classifying blood group substances of nonhuman origin for in vitro diagnostic use into class II (performance standards). The effect of classifying a device into class II is to provide for the future development of one or more performance standards to assure the safety and effectiveness of the device. This action is taken under the Medical Device Amendments of 1976.

EFFECTIVE DATE: October 14, 1980.

FOR FURTHER INFORMATION CONTACT: Kaiser Aziz, Bureau of Medical Devices (HFK-440), Food and Drug Administration, 8757 Georgia Ave., Silver Spring, MD 20910, 301-427-7550.

SUPPLEMENTARY INFORMATION: FDA published in the Federal Register of September 11, 1979 (44 FR 52950), a proposed regulation explaining the development of the proposed regulations classifying hematology and pathology devices, the medical device classification procedures, and the activities of the Hematology and Pathology Device Section of the Clinical Chemistry and Hematology Devices Panel (formerly the Hematology Device Classification Panel and the Pathology Device Classification Panel). FDA also published in that issue of the Federal Register (44 FR 53044) a proposed regulation to classify blood group substances of nonhuman origin for in vitro diagnostic use into class II (performance standards). A period of 60 days was provided for interested persons to submit written comments to FDA.

No comments have been received regarding the proposed regulation to classify this device. Accordingly, the proposed regulation is being adopted without change.

On April 28, 1978, the agency terminated all of the device classification panels and reestablished them with the same functions, but with new names and with a new structure. FDA published notices of these changes in the Federal Register of May 19, 1978 (43 FR 21666, 21667, and 21668) and May 26, 1978 (43 FR 22672 and 22673). Further information regarding the device advisory committees and a list of their new names may be found in the preamble to the general provisions, published elsewhere in this issue of the Federal Register.

Therefore, under the Federal Food, Drug, and Cosmetic Act (secs. 513, 701(a), 52 Stat. 1055, 90 Stat. 540–546 (21 U.S.C. 360c, 371(a))) and under authority delegated to him (21 CFR 5.1), the Commissioner of Food and Drugs is amending Part 864 in Subpart J by adding new § 864.9160, to read as follows:

§ 864.9160 Blood group substances of nonhuman origin for in vitro diagnostic use.

(a) *Identification.* Blood group substances of nonhuman origin for in vitro diagnostic use are materials, such as blood group specific substances prepared from nonhuman sources (e.g., pigs, cows, and horses) used to detect, identify, or neutralize antibodies to various human blood group antigens. This generic type of device does not include materials that are licensed by the Bureau of Biologics of the Food and Drug Administration.

(b) *Classification.* Class II (performance standards).

Effective date. This regulation shall be effective October 14, 1980.

(Secs. 513, 701(a), 52 Stat. 1055, 90 Stat. 540–546 (21 U.S.C. 360c, 371(a)))

Dated: August 15, 1980.

William F. Randolph,

Acting Associate Commissioner for Regulatory Affairs.

[FR Doc. 80-27384 Filed 9-11-80; 8:45 am]

BILLING CODE 4110-03-M

---

21 CFR Part 864

[Docket No. 78N-1923]

Classification of Automated Blood Grouping and Antibody Test Systems

AGENCY: Food and Drug Administration.

ACTION: Final rule.

SUMMARY: The Food and Drug Administration (FDA) is issuing a final rule classifying automated blood grouping and antibody test systems into class II (performance standards). The effect of classifying a device into class II is to provide for the future development of one or more performance standards to assure the safety and effectiveness of the device. This action is being taken under the Medical Device Amendments of 1976.

EFFECTIVE DATE: October 14, 1980.

FOR FURTHER INFORMATION CONTACT: Kaiser Aziz, Bureau of Medical Devices (HFK-440), Food and Drug Administration, 8757 Georgia Ave., Silver Spring, MD 20910, 301-427-7550.

SUPPLEMENTARY INFORMATION: FDA published in the Federal Register of September 11, 1979 (44 FR 52950), a proposed regulation explaining the development of the proposed regulations classifying hematology and pathology devices, the medical device classification procedures, and the activities of the Hematology and Pathology Device Section of the Clinical Chemistry and Hematology Devices Panel (formerly the Hematology Device Classification Panel and the Pathology Device Classification Panel). FDA also published in that issue of the Federal Register (44 FR 53045) a proposed regulation to classify automated blood grouping and antibody test systems into class II (performance standards). A period of 60 days was provided for interested persons to submit written comments to FDA.

In the one comment received on the proposal, a manufacturer concurred with the proposed classification into class II but recommended that the Panel present more evidence to support its claim that class II is needed to ensure the safety and effectiveness. The manufacturer cited the long record of reliability and accuracy of its automated blood grouping device. The comment suggested that these products may be adequately controlled as class I devices until a standard is promulgated in final form.

FDA disagrees with this comment. FDA believes that the reasons presented by the Panel are sufficient to justify classification into class II. The Panel cited specific features of these devices that need to be controlled in order to ensure the accuracy of the results of this device. The Panel also recognized the risk of a transfusion reaction should device inaccuracy result in failure to detect an antibody or cause a blood grouping error. FDA believes that general controls would not ensure the accuracy of the results produced by this device. FDA acknowledges, however, that until a performance standard is promulgated in final form, these devices will be regulated under the general controls of class I. Accordingly, the proposed regulation is being adopted as proposed.

On April 28, 1978, the agency terminated all of the device

classification panels and reestablished them with the same functions, but with new names and with a new structure. FDA published notices of these changes in the Federal Register of May 19, 1978 (43 FR 21666, 21667, and 21668) and May 26, 1978 (43 FR 22672 and 22673). Further information regarding the device advisory committees and a list of their new names may be found in the preamble to the general provisions, published elsewhere in this issue of the Federal Register.

Therefore, under the Federal Food, Drug, and Cosmetic Act (secs. 513, 701(a), 52 Stat. 1055, 90 Stat. 540–546 (21 U.S.C. 360c, 371(a))) and under authority delegated to him (21 CFR 5.1), the Commissioner of Food and Drugs is amending Part 864 in Subpart J by adding new § 864.9175, to read as follows:

§ 864.9175 Automated blood grouping and antibody test system.

(a) *Identification.* An automated blood grouping and antibody test system is a device used to group erythrocytes (red blood cells) and to detect antibodies to blood group antigens.

(b) *Classification.* Class II (performance standards).

Effective date. This regulation shall be effective October 14, 1980.

(Secs. 513, 701(a), 52 Stat. 1055, 90 Stat. 540–546 (21 U.S.C. 360c, 371(a)))

Dated: August 15, 1980.

William F. Randolph,

Acting Associate Commissioner for Regulatory Affairs.

[FR Doc. 80-27385 Filed 9-11-80; 8:45 am]

BILLING CODE 4110-03-M

---

21 CFR Part 864

[Docket No. 78N-1924]

Classification of Blood Grouping View Boxes

AGENCY: Food and Drug Administration.

ACTION: Final rule.

SUMMARY: The Food and Drug Administration (FDA) is issuing a final rule classifying blood grouping view boxes into class I (general controls). The effect of classifying a device into class I is to require that the device meet only the general controls applicable to all devices. This action is being taken under the Medical Device Amendments of 1976.

EFFECTIVE DATE: October 14, 1980.

FOR FURTHER INFORMATION CONTACT: Kaiser Aziz, Bureau of Medical Devices (HFK-440), Food and Drug Administration, 8757 Georgia Ave., Silver Spring, MD 20910, 301-427-7550.

SUPPLEMENTARY INFORMATION: FDA published in the Federal Register of September 11, 1979 (44 FR 52950), a proposed regulation explaining the development of the proposed regulations classifying hematology and pathology devices, the medical device classification procedures, and the activities of the Hematology and Pathology Device Section of the Clinical Chemistry and Hematology Devices Panel (formerly the Hematology Device Classification Panel and the Pathology Device Classification Panel). FDA also published in that issue of the Federal Register (44 FR 53046) a proposed regulation to classify blood grouping view boxes into class I (general controls). A period of 60 days was provided for interested persons to submit written comments to FDA.

No comments have been received regarding the proposed regulation to classify this device. Accordingly, the proposed regulation is being adopted without change.

On April 28, 1978, the agency terminated all of the device classification panels and reestablished them with the same functions, but with new names and with a new structure. FDA published notices of these changes in the Federal Register of May 19, 1978 (43 FR 21666, 21667, and 21668) and May 26, 1978 (43 FR 22672 and 22673). Further information regarding the device advisory committees and a list of their new names may be found in the preamble to the general provisions, published elsewhere in this issue of the Federal Register.

Therefore, under the Federal Food, Drug, and Cosmetic Act (secs. 513, 701(a), 52 Stat. 1055, 90 Stat. 540–546 (21 U.S.C. 360c, 371(a))) and under authority delegated to him (21 CFR 5.1), the Commissioner of Food and Drugs is amending Part 864 in Subpart J by adding new § 864.9185, to read as follows:

§ 864.9185 Blood grouping view box.

(a) *Identification.* A blood grouping view box is a device with a glass or plastic viewing surface, which may be illuminated and heated, that is used to view cell reactions in antigen-antibody testing.

(b) *Classification.* Class I (general controls).

Effective date. This regulation shall be effective October 14, 1980.

(Secs. 513, 701(a), 52 Stat. 1055, 90 Stat. 540–546 (21 U.S.C. 360c, 371(a)))

Dated: August 15, 1980.

William F. Randolph,

Acting Associate Commissioner for Regulatory Affairs.

[FR Doc. 80-27386 Filed 9-11-80; 8:45 am]

BILLING CODE 4110-03-M

---

21 CFR Part 864

[Docket No. 78N-1925]

Classification of Blood Mixing Devices and Blood Weighing Devices

AGENCY: Food and Drug Administration.

ACTION: Final rule.

SUMMARY: The Food and Drug Administration (FDA) is issuing a final rule classifying blood mixing devices and blood weighing devices into class I (general controls). The effect of classifying a device into class I is to require that the device meet only the general controls applicable to all devices. This action is being taken under the Medical Device Amendments of 1976.

EFFECTIVE DATE: October 14, 1980.

FOR FURTHER INFORMATION CONTACT: Kaiser Aziz, Bureau of Medical Devices (HFK-440), Food and Drug Administration, 8757 Georgia Ave., Silver Spring, MD 20910, 301-427-7550.

SUPPLEMENTARY INFORMATION: FDA published in the Federal Register of September 11, 1979 (44 FR 52950), a proposed regulation explaining the development of the proposed regulations classifying hematology and pathology devices, the medical device classification procedures, and the activities of the Hematology and Pathology Device Section of the Clinical Chemistry and Hematology Devices Panel (formerly the Hematology Device Classification Panel and the Pathology Device Classification Panel). FDA also published in that issue of the Federal Register (44 FR 53046) a proposed regulation to classify blood mixing devices and blood weighing devices into class I (general controls). A period of 60 days was provided for interested persons to submit written comments to FDA.

One comment was received on the proposal. The following is a summary of this comment and the agency's response to it:

The comment stated that the identification is confusing. The device is identified as a blood mixing and weighing device but the identification states that the device either mixes blood or weighs blood.

FDA agrees that the proposed identification was confusing. The

agency modified the name of the generic type of device and its identification to make it clear that the rule applies to two groups of devices, blood mixing devices and blood weighing devices that are intended for medical purposes. Accordingly, the proposed regulation is being adopted with the changes noted.

On April 28, 1978, the agency terminated all of the device classification panels and reestablished them with the same functions, but with new names and with a new structure. FDA published notices of these changes in the Federal Register of May 19, 1978 (43 FR 21666, 21667, and 21668) and May 26, 1978 (43 FR 22672 and 22673). Further information regarding the device advisory committees and a list of their new names may be found in the preamble to the general provisions, published elsewhere in this issue of the Federal Register.

Therefore, under the Federal Food, Drug, and Cosmetic Act (secs. 513, 701(a), 52 Stat. 1055, 90 Stat. 540–546 (21 U.S.C. 360c, 371(a))) and under authority delegated to him (21 CFR 5.1), the Commissioner of Food and Drugs is amending Part 864 in Subpart J by adding new § 864.9195, to read as follows:

§ 864.9195 Blood mixing devices and blood weighing devices.

(a) *Identification.* A blood mixing device is a device intended for medical purposes that is used to mix blood or blood components by agitation. A blood weighing device is a device intended for medical purposes that is used to weigh blood or blood components as they are collected.

(b) *Classification.* Class I (general controls).

Effective date. This regulation shall be effective October 14, 1980.

(Secs. 513, 701(a), 52 Stat. 1055, 90 Stat. 540–546 (21 U.S.C. 360c, 371(a)))

Dated: August 15, 1980.

William F. Randolph,

Acting Associate Commissioner for Regulatory Affairs.

[FR Doc. 80-27387 Filed 9-11-80; 8:45 am]

BILLING CODE 4110-03-M

---

21 CFR Part 864

[Docket No. 78N-1926]

Classification of Blood and Plasma Warming Devices

AGENCY: Food and Drug Administration.

ACTION: Final rule.

SUMMARY: The Food and Drug Administration (FDA) is issuing a final rule classifying nonelectromagnetic blood and plasma warming devices into class II (performance standards) and electromagnetic blood and plasma warming devices into class III (premarket approval). The effect of classifying a device into class II is to provide for the future development of one or more performance standards to assure the safety and effectiveness of the device. The effect of classifying a device into class III is to require each manufacturer of the device to submit to FDA a premarket approval application that includes information concerning safety and effectiveness tests for the device. Each premarket approval application must be submitted to FDA on or before April 29, 1983, or 90 days after promulgation of a separate regulation requiring premarket approval of the device, whichever occurs later. This action is being taken under the Medical Device Amendments of 1976.

EFFECTIVE DATE: October 14, 1980.

FOR FURTHER INFORMATION CONTACT: Kaiser Aziz, Bureau of Medical Devices (HFK-440), Food and Drug Administration, 8757 Georgia Ave., Silver Spring, MD 20910, 301-427-7550.

SUPPLEMENTARY INFORMATION: FDA published in the Federal Register of September 11, 1979 (44 FR 52950), a proposed regulation explaining the development of the proposed regulations classifying hematology and pathology devices, the medical device classification procedures, and the activities of the Hematology and Pathology Device Section of the Clinical Chemistry and Hematology Devices Panel (formerly the Hematology Device Classification Panel and the Pathology Device Classification Panel). FDA also published in that issue of the Federal Register (44 FR 53047) a proposed regulation to classify nonelectromagnetic blood and plasma warming devices into class III (premarket approval). A period of 60 days was provided for interested persons to submit written comments to FDA.

No comments have been received regarding the proposed regulation to classify this device. Accordingly, the proposed regulation is being adopted without change.

On April 28, 1978, the agency terminated all of the device classification panels and reestablished them with the same functions, but with new names and with a new structure. FDA published notices of these changes in the Federal Register of May 19, 1978 (43 FR 21666, 21667, and 21668) and May 26, 1978 (43 FR 22672 and 22673). Further information regarding the device advisory committees and a list of their new names may be found in the preamble to the general provisions, published elsewhere in this issue of the Federal Register.

Therefore, under the Federal Food, Drug, and Cosmetic Act (secs. 513, 701(a), 52 Stat. 1055, 90 Stat. 540–546 (21 U.S.C. 360c, 371(a))) and under authority delegated to him (21 CFR 5.1), the Commissioner of Food and Drugs is amending Part 864 in Subpart J by adding new § 864.9205, to read as follows:

§ 864.9205 Blood and plasma warming device.

(a) *Nonelectromagnetic blood or plasma warming device*—(1) *Identification.* A nonelectromagnetic blood and plasma warming device is a device that warms blood or plasma, by means other than electromagnetic radiation, prior to administration.

(2) *Classification.* Class II (performance standards).

(b) *Electromagnetic blood and plasma warming device*—(1) *Identification.* An electromagnetic blood and plasma warming device is a device that employs electromagnetic radiation (radiowaves or microwaves) to warm a bag or bottle of blood or plasma prior to administration.

(2) *Classification.* Class III (premarket approval).

Effective date. This regulation shall be effective October 14, 1980.

(Secs. 513, 701(a), 52 Stat. 1055, 90 Stat. 540–546 (21 U.S.C. 360c, 371(a)))

Dated: August 15, 1980.

William F. Randolph,

Acting Associate Commissioner for Regulatory Affairs.

[FR Doc. 80-27388 Filed 9-11-80; 8:45 am]

BILLING CODE 4110-03-M

---

21 CFR Part 864

[Docket No. 78N-1927]

Classification of Cell-Freezing Apparatus and Reagents for In Vitro Diagnostic Use

AGENCY: Food and Drug Administration.

ACTION: Final rule.

SUMMARY: The Food and Drug Administration (FDA) is issuing a final rule classifying cell-freezing apparatus and reagents for in vitro diagnostic use into class I (general controls). The effect of classifying a device into class I is to require that the device meet only the general controls applicable to all devices. This action is being taken under the Medical Device Amendments of 1976.

EFFECTIVE DATE: October 14, 1980.

FOR FURTHER INFORMATION CONTACT: Kaiser Aziz, Bureau of Medical Devices (HFK-440), Food and Drug Administration, 8757 Georgia Ave., Silver Spring, MD 20910, 301-427-7550.

SUPPLEMENTARY INFORMATION: FDA published in the Federal Register of September 11, 1979 (44 FR 52950), a proposed regulation explaining the development of the proposed regulations classifying hematology and pathology devices, the medical device classification procedures, and the activities of the Hematology and Pathology Device Section of the Clinical Chemistry and Hematology Devices Panel (formerly the Hematology Device Classification Panel and the Pathology Device Classification Panel). FDA also published in that issue of the Federal Register (44 FR 53050) a proposed regulation to classify cell-freezing apparatus and reagents for in vitro diagnostic use into class I (general controls). A period of 60 days was provided for interested persons to submit written comments to FDA.

No comments have been received regarding the proposed regulation to classify this device. Accordingly, the proposed regulation is being adopted without change.

On April 28, 1978, the agency terminated all of the device classification panels and reestablished them with the same functions, but with new names and with a new structure. FDA published notices of these changes in the Federal Register of May 19, 1978 (43 FR 21666, 21667, and 21668) and May 26, 1978 (43 FR 22672 and 22673). Further information regarding the device advisory committees and a list of their new names may be found in the preamble to the general provisions, published elsewhere in this issue of the Federal Register.

Therefore, under the Federal Food, Drug, and Cosmetic Act (secs. 513, 701(a), 52 Stat. 1055, 90 Stat. 540-546 (21 U.S.C. 360c, 371(a))) and under authority delegated to him (21 CFR 5.1), the Commissioner of Food and Drugs is amending Part 864 in Subpart J by adding new § 864.9225, to read as follows:

§ 864.9225 Cell-freezing apparatus and reagents for in vitro diagnostic use.

(a) *Identification.* Cell-freezing apparatus and reagents for in vitro diagnostic use are devices used to freeze human red blood cells for in vitro diagnostic use.

(b) *Classification.* Class I (general controls).

Effective date. This regulation shall be effective October 24, 1980.

(Secs. 513, 701(a), 52 Stat. 1055, 90 Stat. 540-546 (21 U.S.C. 360c, 371(a)))

Dated: August 15, 1980.

William F. Randolph,

Acting Associate Commissioner for Regulatory Affairs.

[FR Doc. 80-27389 Filed 9-11-80; 8:45 am]

BILLING CODE 4110-03-M

---

21 CFR Part 864

[Docket No. 78N-1928]

Classification of Automated Blood Cell Separators

AGENCY: Food and Drug Administration.

ACTION: Final rule.

SUMMARY: The Food and Drug Administration (FDA) is issuing a final rule classifying automated blood cell separators into class III (premarket approval). The effect of classifying a device into class III is to require each manufacturer of the device to submit to FDA a premarket approval application that includes information concerning safety and effectiveness tests for the device. Each application must be submitted to FDA on or before April 29, 1983, or 90 days after promulgation of a separate regulation requiring premarket approval of the device, whichever occurs later. This action is being taken under the Medical Device Amendments of 1976.

EFFECTIVE DATE: October 14, 1980.

FOR FURTHER INFORMATION CONTACT: Kaiser Aziz, Bureau of Medical Devices (HFK-440), Food and Drug Administration, 8757 Georgia Ave., Silver Spring, MD 20910, 301-427-7550.

SUPPLEMENTARY INFORMATION: FDA published in the Federal Register of September 11, 1979 (44 FR 52950), a proposed regulation explaining the development of the proposed regulations classifying hematology and pathology devices, the medical device classification procedures, and the activities of the Hematology and Pathology Device Section of the Clinical Chemistry and Hematology Devices Panel (formerly the Hematology Device Classification Panel and the Pathology Device Classification Panel). FDA also published in that issue of the Federal Register (44 FR 53050) a proposed regulation to classify automated blood cell separators into class III (premarket approval). A period of 60 days was provided for interested persons to submit written comments to FDA.

The following is a summary of the comments received on the proposal and the agency's response to them:

1. A comment from the Haemonetics Corp., a manufacturer of automated blood cell separators, agreed that automated blood cell separators should be classified into class III. The comment requested that the regulation distinguish cell separators with reusable bowls from cell separators with disposable bowls. The comment noted that the Panel recommendations are appropriate for systems employing reusable bowls but not for systems employing disposable bowls. The comment stated that cell separators with completely disposable blood pathways do not present a potential unreasonable risk of illness or injury nor are these devices life threatening. Cross contamination is not a problem with presterilized blood pathways that are disposed of after use. The comment noted that Haemonetics' 7 years of experience with automated blood cell separators, involving over 1 million blood processing procedures, had not resulted in a single report of infection or biologic reaction due to contamination within the disposable blood pathway. It was also noted that there has been no evidence of donor or recipient harm due to blood incompatibility caused by the materials in the disposable blood pathways. The comment provided additional references concerning disposable systems, noting that the references published with the proposed regulation dealt only with cell separators with reusable bowls.

FDA agrees that the regulation should distinguish disposable pathway devices from reusable bowl devices, as well as filtration leukapheresis devices. Therefore, the identification has been modified to reflect this distinction. FDA agrees that contamination is not a problem with disposable blood pathways if their sterility is assured. However, the risks of shock, blood loss, clotting, exposure to hepatitis, and delivery of damaged blood components still constitute a potential unreasonable risk of illness or injury. FDA agrees that the references provided with the proposed regulation refer only to reusable bowl devices. Therefore, an additional reference has been provided with the final regulation (Ref. 5).

2. Travenol Laboratories, another manufacturer of automated blood cell separators, stated that sufficient information exists to write a performance standard for automated blood cell separators and that the Panel was not aware of this information when it recommended classification into class III. The comment claimed that the Panel had, therefore, placed these devices in class III by default. The comment noted that certain risks to the donor, i.e.

activation of the complement systems, abdominal pain, heparin toxicity, and fever in recipient patients, are associated only with filtration leukapheresis and not centrifugal cell separation. The comment stated that filtration leukapheresis is almost nonexistent in the United States and therefore risks associated with filtration leukapheresis are not associated with automated blood cell separators. Travenol stated that it is unaware of the Panel's experience with severe fevers in patients due to pump-induced breakdown of granulocytes or severe bleeding in patients after infusion of white cells prepared with an automated cell separator, and suggested that these problems be reported to the manufacturer or published in a scientific journal. The comment questioned that the references cited in the proposal to the proposed regulation supported the agency's action. The thromboembolism problems cited in reference 1 was said to be due to the improper choice of anticoagulant, not to cell separator malfunction, and was solved by the use of a micro-aggregate filter. The sterilization problem cited in reference 2 were said to be due largely to reusable bowls. The use of sterilized disposable bowls and fluid pathways have eliminated these problems. Reference 3 was said to refer to a complete plasma exchange transfusion and not to routine component donations. Reference 4 (21 CFR Part 606.65) is a regulation administered by the Bureau of Biologics, FDA, through its licensure programs, CGMP inspections of licensed establishments, and master file requirements. Travenol believes that premarket approval is unnecessary due to the controls already in existence to assure safety and effectiveness. The comment agreed that the use of the automated blood cell separator to prepare blood components for transfusion is of substantial importance in preventing impairment of human health. The comment asserted, however, that the device does not present a potential unreasonable risk to health, and it is not an implant, life sustaining, or life supporting.

FDA does not agree that there is sufficient information to establish a performance standard for these devices. The Panel did not recommend placing these devices into class III "by default" due to unfamiliarity with available information. Rather, the Panel based its recommendation on its members' experience with these devices, including the experience of a member who is a blood banker. FDA agrees that certain risks cited in the proposed regulation apply only to filtration leukapheresis devices. However, FDA has no data to support the comment's assertion that filtration leukapheresis is almost nonexistent in the United States. Therefore, a consideration of filtration devices and their associated risks is appropriate to a discussion of automated blood cell separators. FDA agrees with the comments concerning references 1 and 2 of the proposed regulation. Concerning reference 3, FDA notes that at least one automated blood cell separator is promoted for use in plasma exchanges. Because the use of an automated blood cell separator can be of substantial importance in preventing impairment of human health and because insufficient information exists to write a performance standard, premarket approval is necessary to provide a reasonable assurance of the safety and effectiveness of automated blood cell separators.

FDA thus disagrees with the comment's suggestion that automated blood cell separators be classified into class II and is classifying the device into class III as proposed.

On November 19, 1979, FDA held a public meeting of the Hematology Section of the Clinical Chemistry and Hematology Devices Panel at which the comments received on the proposal were considered. At the meeting, representatives of Travenol Laboratories presented their views that these devices should be classified into class II.

FDA has carefully considered the comments, and the additional information and data submitted on this device, and the Section's recommendation that automated blood cell separators be classified into class III as proposed. FDA believes that insufficient information exists to establish a performance standard for the device and that its use is of substantial importance in preventing impairment of human health.

Potential problems with the device such as clotting in the bowl, leaks in the system, fainting, nausea and convulsions, still exist. Alarm systems are built into the newer machines precisely because these problems can still occur. The danger can be even greater if individuals using the device rely upon the alarm system, and the system malfunctions. Problems with automated blood cell separators may be underestimated due to a reluctance on the part of investigators to publish a description of the difficulties they have encountered. Concerns over the potential risk to the donor have also been expressed because automated blood cell separators are used increasingly for leukapheresis. McCullough (Ref. 6) believes that additional clinical studies will be required to determine the effects of leukapheresis on normal donors. FDA believes that until these studies are completed, the safety and effectiveness of this device have not been established. Therefore, premarket approval is necessary to provide a reasonable assurance of the device's safety and effectiveness.

Accordingly, the proposed regulation is being adopted with the changes noted.

List of References

1. Moriau, M., M. De Bruyere, and C. Bellenot, "Granulocyte Collections From Normal Donors Using the Continuous Flow Centrifuge," *in "Leukocytes:* Separation, Collection, and Transfusion," Edited by Goldman, J. M. and R. M. Lowenthal, Academic Press, London, pp. 88–96, 1975.

2. Cartledge, K. W., "Problems in the Sterilization of Cell Separator Bowls," *in "Leukocytes:* Separation, Collection, and Transfusion," Edited by Goldman, J. M. and R. M. Lowenthal, Academic Press, London, pp. 43–45, 1975.

3. Oon, C. J. and J. R. Hobbs, "Medical Problems in Donors on Treatment Using the Continuous Flow Blood Separator," *in* "Leukocytes: Separation, Collection, and Transfusion," Edited by Goldman, J. M. and R. M. Lowenthal, Academic Press, London, pp. 576–577, 1975.

4. Code of Federal Regulations, 21 CFR Part 606—Current Good Manufacturing Practices for Blood and Blood Components, Subpart D—Equipment § 606.65.

5. Hester, J. P. et al., "Principals of Blood Separation and Component Extraction in a Disposable Continuous-Flow Single Stage Channel," *Blood,* 54(1):254–268, 1979.

6. McCullough, J., "Leukapheresis and Granulocyte Transfusion," *CRC Critical Reviews in Clinical Laboratory Sciences:* 275–327, 1979.

On April 28, 1978, the agency terminated all of the device classification panels and reestablished them with the same functions, but with new names and with a new structure. FDA published notices of these changes in the Federal Register of May 19, 1978 (43 FR 21666, 21667, and 21668) and May 26, 1978 (43 FR 22672 and 22673). Further information regarding the device advisory committees and a list of their new names may be found in the preamble to the general provisions, published elsewhere in this issue of the Federal Register.

Therefore, under the Federal Food, Drug, and Cosmetic Act (secs. 513, 701(a), 52 Stat. 1055, 90 Stat. 540–546 (21 U.S.C. 360c, 371(a))) and under authority delegated to him (21 CFR 5.1), the Commissioner of Food and Drugs is amending Part 864 in Subpart J by adding new § 864.9245, to read as follows:

§ 864.9245 Automated blood cell separator.

(a) *Identification.* An automated blood cell separator is a device that automatically removes whole blood from a donor, separates the blood into components (red blood cells, white blood cells, plasma, and platelets), retains one or more of the components, and returns the remainder of the blood to the donor. The components obtained are transfused or used to prepare blood products for administration. These devices operate on either a centrifugal separation principle or a filtration principle. The separation bowls of centrifugal blood cell separators may be reusable or disposable.

(b) *Classification.* Class IIII (premarket approval).

Effective date. This regulation shall be effective October 14, 1980.

(Secs. 513, 701(a), 52 Stat. 1055, 90 Stat. 540–546 (21 U.S.C. 360c, 371(a)))

Dated: August 15, 1980.

William F. Randolph,

Acting Associate Commissioner for Regulatory Affairs.

[FR Doc. 80-27390 Filed 9-11-80; 8:45 am]

BILLING CODE 4110-03-M

---

21 CFR Part 864

[Docket No. 78N-1929]

Classification of Blood Bank Centrifuges for in Vitro Diagnostic Use

AGENCY: Food and Drug Administration.

ACTION: Final rule.

SUMMARY: The Food and Drug Administration (FDA) is issuing a final rule classifying blood bank centrifuges for in vitro diagnostic use into class I (general controls). The effect of classifying a device into class I is to require that the device meet only the general controls applicable to all devices. This action is being taken under the Medical Device Amendments of 1976.

EFFECTIVE DATE: October 14, 1980.

FOR FURTHER INFORMATION CONTACT: Kaiser Aziz, Bureau of Medical Devices (HFK-440), Food and Drug Administration, 8757 Georgia Ave., Silver Spring, MD 20910, 301-427-7550.

SUPPLEMENTARY INFORMATION: FDA published in the Federal Register of September 11, 1979 (44 FR 52950), a proposed regulation explaining the development of the proposed regulations classifying hematology and pathology devices, the medical device classification procedures, and the activities of the Hematology and Pathology Device Section of the Clinical Chemistry and Hematology Devices Panel (formerly the Hematology Device Classification Panel the Pathology Device Classification Panel). FDA also published in that issue of the Federal Register (44 FR 53052) a proposed regulation to classify blood bank centrifuges for in vitro diagnostic use into class I (general controls). A period of 60 days was provided for interested persons to submit written comments to FDA.

No comments have been received regarding the proposed regulation to classify this device. Accordingly, the proposed regulation is being adopted without change.

On April 28, 1978, the agency terminated all of the device classification panels and reestablished them with the same functions, but with new names and with a new structure. FDA published notices of these changes in the Federal Register of May 19, 1978 (43 FR 21666, 21667, and 21668) and May 26, 1978 (43 FR 22672 and 22673). Further information regarding the device advisory committees and a list of their new names may be found in the preamble to the general provisions, published elsewhere in this issue of the Federal Register.

Therefore, under the Federal Food, Drug, and Cosmetic Act (secs. 513, 701(a), 52 Stat. 1055, 90 Stat. 540–546 (21 U.S.C. 360c, 371(a))) and under authority delegated to him (21 CFR 5.1), the Commissioner of Food and Drugs is amending Part 864 in Subpart J by adding new § 864.9275, to read as follows:

§ 864.9275 Blood bank centrifuge for in vitro diagnostic use.

(a) *Identification.* A blood bank centrifuge for in vitro diagnostic use is a device used only to separate blood cells for further diagnostic testing.

(b) *Classification.* Class I (general controls).

Effective date. This regulation shall be effective October 14, 1980.

(Secs.513, 701(a), 52 Stat. 1055, 90 Stat. 540–546 (21 U.S.C. 360c, 371(a)))

Dated: August 15, 1980.

William F. Randolph,

Acting Associate Commissioner for Regulatory Affairs.

[FR Doc. 80-27391 Filed 9-11-80; 8:45 am]

BILLING CODE 4110-03-M

---

21 CFR Part 864

[Docket No. 78N-1930]

Classification of Automated Cell-Washing Centrifuges for Immuno-Hematology

AGENCY: Food and Drug Administration.

ACTION: Final rule.

SUMMARY: The Food and Drug Administration (FDA) is issuing a final rule classifying automated cell-washing centrifuges for immuno-hematology into class II (performance standards). The effect of classifying a device into class II is to provide for the future development of one or more performance standards to assure the safety and effectiveness of the device. This action is being taken under the Medical Device Amendments of 1976.

EFFECTIVE DATE: October 14, 1980.

FOR FURTHER INFORMATION CONTACT: Kaiser Aziz, Bureau of Medical Devices (HFK-440), Food and Drug Administration, 8757 Georgia Ave., Silver Spring, MD 20910, 301-427-7550.

SUPPLEMENTARY INFORMATION: FDA published in the Federal Register of September 11, 1979 (44 FR 52950), a proposed regulation explaining the development of the proposed regulations classifying hematology and pathology devices, the medical device classification procedures, and the activities of the Hematology and Pathology Device Section of the Clinical Chemistry and Hematology Devices Panel (formerly the Hematology Device Classification Panel and the Pathology Device Classification Panel). FDA also published in that issue of the Federal Register (44 FR 53052) a proposed regulation to classify automated cell-washing centrifuges for immuno-hematology into class II (performance standards). A period of 60 days was provided for interested persons to submit written comments to FDA.

No comments have been received regarding the proposed regulation to classify this device. Accordingly, the proposed regulation is being adopted without change.

On April 28, 1978, the agency terminated all of the device classification panels and reestablished them with the same functions, but with new names and with a new structure. FDA published notices of these changes in the Federal Register of May 19, 1978 (43 FR 21666, 21667, and 21668) and May 26, 1978 (43 FR 22672 and 22673). Further information regarding the device advisory committees and a list of their new names may be found in the preamble to the general provisions,

published elsewhere in this issue of the Federal Register.

Therefore, under the Federal Food, Drug, and Cosmetic Act (secs. 513, 701(a), 52 Stat. 1055, 90 Stat. 540–546 (21 U.S.C. 360c, 371(a))) and under authority delegated to him (21 CFR 5.1), the Commissioner of Food and Drugs is amending Part 864 in Subpart J by adding new § 864.9285, to read as follows:

§ 864.9285 Automated cell-washing centrifuge for immuno-hematology.

(a) *Identification.* An automated cell-washing centrifuge for immuno-hematology is a device used to separate and prepare cells and sera for further in vitro diagnostic testing.

(b) *Classification.* Class II (performance standards).

Effective date. This regulation shall be effective October 14, 1980.

(Secs. 513, 701(a), 52 Stat. 1055, 90 Stat. 540–546 (21 U.S.C. 360c, 371(a)))

Dated: August 15, 1980.

William F. Randolph,

Acting Associate Commissioner for Regulatory Affairs.

[FR Doc. 80-27392 Filed 9-11-80; 8:45 am]

BILLING CODE 4110-03-M

---

21 CFR Part 864

[Docket No. 78N-1931]

Classification of Automated Coombs Test Systems

AGENCY: Food and Drug Administration.

ACTION: Final rule.

SUMMARY: The Food and Drug Administration (FDA) is issuing a final rule classifying automated Coombs test systems into class II (performance standards). The effect of classifying a device into class II is to provide for the future development of one or more performance standards to assure the safety and effectiveness of the device. This action is being taken under the Medical Device Amendments of 1976.

EFFECTIVE DATE: October 14, 1980.

FOR FURTHER INFORMATION CONTACT: Kaiser Aziz, Bureau of Medical Devices (HFK-440), Food and Drug Administration, 8757 Georgia Ave., Silver Spring, MD 20910, 301-427-7550.

SUPPLEMENTARY INFORMATION: FDA published in the Federal Register of September 11, 1979 (44 FR 52950), a proposed regulation explaining the development of the proposed regulations classifying hematology and pathology devices, the medical device classification procedures, and the activities of the Hematology and Pathology Device Section of the Clinical Chemistry and Hematology Devices Panel (formerly the Hematology Device Classification Panel and the Hematology and Pathology Device Classification Panel). FDA also published in that issue of the Federal Register (44 FR 53053) a proposed regulation to classify automated Coombs test systems into class II (performance standards). A period of 60 days was provided for interested persons to submit written comments to FDA.

No comments have been received regarding the proposed regulation to classify this device. Accordingly, the proposed regulation is being adopted without change.

On April 28, 1978, the agency terminated all of the device classification panels and reestablished them with the same functions, but with new names and with a new structure. FDA published notices of these changes in the Federal Register of May 19, 1978 (43 FR 21666, 21667, and 21668) and May 26, 1978 (43 FR 22672 and 22673). Further information regarding the device advisory committees and a list of their new names may be found in the preamble to the general provisions, published elsewhere in this issue of the Federal Register.

Therefore, under the Federal Food, Drug, and Cosmetic Act (secs. 513, 701(a), 52 Stat. 1055, 90 Stat. 540–546 (21 U.S.C. 360c, 371(a))) and under authority delegated to him (21 CFR 5.1), the Commissioner of Food and Drugs is amending Part 864 in Subpart J by adding new § 864.9300, to read as follows:

§ 864.9300 Automated Coombs test systems.

(a) *Identification.* An automated Coombs test system is a device used to detect and identify antibodies in patient sera or antibodies bound to red cells. The Coombs test is used for the diagnosis of hemolytic disease of the newborn, and autoimmune hemolytic anemia. The test is also used in crossmatching and in investigating transfusion reactions and drug-induced red cell sensitization.

(b) *Classification.* Class II (performance standards).

Effective date. This regulation shall be effective October 14, 1980.

(Secs. 513, 701(a), 52 Stat. 1055, 90 Stat. 540–546 (21 U.S.C. 360c, 371(a)))

Dated: August 15, 1980.

William F. Randolph,

Acting Associate Commissioner for Regulatory Affairs.

[FR Doc. 80-27393 Filed 9-11-80; 8:45 am]

BILLING CODE 4110-03-M

---

21 CFR Part 864

[Docket No. 78N-1932]

Classification of Copper Sulfate Solutions for Specific Gravity Determinations

AGENCY: Food and Drug Administration.

ACTION: Final rule.

SUMMARY: The Food and Drug Administration (FDA) is issuing a final rule classifying copper sulfate solutions for specific gravity determinations into class I (general controls). The effect of classifying a device into class I is to require that the device meet only the general controls applicable to all devices. This action is being taken under the Medical Device Amendments of 1976.

EFFECTIVE DATE: October 14, 1980.

FOR FURTHER INFORMATION CONTACT: Kaiser Aziz, Bureau of Medical Devices (HFK-440), Food and Drug Administration, 8757 Georgia Ave., Silver Spring, MD 20910, 301-427-7550.

SUPPLEMENTARY INFORMATION: FDA published in the Federal Register of September 11, 1979 (44 FR 52950), a proposed regulation explaining the development of the proposed regulations classifying hematology and pathology devices, the medical device classification procedures, and the activities of the Hematology and Pathology Device Section of the Clinical Chemistry and Hematology Devices Panel (formerly the Hematology Device Classification Panel and the Pathology Device Classification Panel). FDA also published in that issue of the Federal Register (44 FR 53054) a proposed regulation to classify copper sulfate solutions for specific gravity determinations into class I (general controls). A period of 60 days was provided for interested persons to submit written comments to FDA.

No comments have been received regarding the proposed regulation to classify this device. Accordingly, the proposed regulation is being adopted without change.

On April 28, 1978, the agency terminated all of the device classification panels and reestablished them with the same functions, but with new names and with a new structure. FDA published notices of these changes

in the Federal Register of May 19, 1978 (43 FR 21666, 21667, and 21668) and May 26, 1978 (43 FR 22672 and 22673). Further information regarding the device advisory committees and a list of their new names may be found in the preamble to the general provisions, published elsewhere in this issue of the Federal Register.

Therefore, under the Federal Food, Drug, and Cosmetic Act (secs. 513, 701(a), 52 Stat. 1055, 90 Stat. 540–546 (21 U.S.C. 360c, 371(a))) and under authority delegated to him (21 CFR 5.1), the Commissioner of Food and Drugs is amending Part 864 in Subpart J by adding new § 864.9320, to read as follows:

§ 864.9320 Copper sulfate solution for specific gravity determinations.

(a) *Identification.* A copper sulfate solution for specific gravity determinations is a device used to determine whether the hemoglobin content of a potential donor's blood meets the required level (12.5 grams per 100 milliliters of blood for women and 13.5 grams per 100 milliliters of blood for men).

(b) *Classification.* Class I (general controls).

Effective date. This regulation shall be effective October 14, 1980.

(Secs. 513, 701(a), 52 Stat. 1055, 90 Stat. 540–546 (21 U.S.C. 360c, 371(a)))

Dated: August 15, 1980.

William F. Randolph,

Acting Associate Commissioner for Regulatory Affairs.

[FR Doc. 80-27394 Filed 9-11-80; 8:45 am]

BILLING CODE 4110-03-M

---

21 CFR Part 864

[Docket No. 78N-1933]

Classification of Stabilized Enzyme Solutions

AGENCY: Food and Drug Administration.

ACTION: Final rule

SUMMARY: The Food and Drug Administration (FDA) is issuing a final rule classifying stabilized enzyme solutions into class II (performance standards). The effect of classifying a device into class II is to provide for the future development of one or more performance standards to assure the safety and effectiveness of the device. This action is being taken under the Medical Device Amendments of 1976.

EFFECTIVE DATE: October 14, 1980.

FOR FURTHER INFORMATION CONTACT: Kaiser Aziz, Bureau of Medical Devices (HFK-440), Food and Drug Administration, 8757 Georgia Ave., Silver Spring, MD 20910, 301-427-7550.

SUPPLEMENTARY INFORMATION: FDA published in the Federal Register of September 11, 1979 (44 FR 52950), a proposed regulation explaining the development of the proposed regulations classifying hematology and pathology devices, the medical device classification procedures, and the activities of the Hematology and Pathology Device Section of the Clinical Chemistry and Hematology Devices Panel (formerly the Hematology Device Classification Panel and the Pathology Device Classification Panel). FDA also published in that issue of the Federal Register (44 FR 53055) a proposed regulation to classify stabilized enzyme solutions into class II (performance standards). A period of 60 days was provided for interested persons to submit written comments to FDA.

No comments have been received regarding the proposed regulation to classify this device. Accordingly, the proposed regulation is being adopted with a minor clarifying change.

On April 28, 1978, the agency terminated all of the device classification panels and reestablished them with the same functions, but with new names and with a new structure. FDA published notices of these changes in the Federal Register of May 19, 1978 (43 FR 21666, 21667, and 21668) and May 26, 1978 (43 FR 22672 and 22673). Further information regarding the device advisory committees and a list of their new names may be found in the preamble to the general provisions, published elsewhere in this issue of the Federal Register.

Therefore, under the Federal Food, Drug, and Cosmetic Act (secs. 513, 701(a), 52 Stat. 1055, 90 Stat. 540–546 (21 U.S.C. 360c, 371(a))) and under authority delegated to him (21 CFR 5.1), the Commissioner of Food and Drugs is amending Part 864 in Subpart J by adding new § 864.9400, to read as follows:

§ 864.9400 Stabilized enzyme solution.

(a) *Identification.* A stabilized enzyme solution is a reagent intended for medical purposed that is used to enhance the reactivity of red blood cells with certain antibodies, including antibodies that are not detectable by other techniques. These enzyme solutions include papain, bromelin, ficin, and trypsin.

(b) *Classification.* Class II (performance standards).

Effective date. This regulation shall be effective October 14, 1980.

(Secs. 513, 701(a), 52 Stat. 1055, 90 Stat. 540–546 (21 U.S.C. 360c, 371(a)))

Dated: August 15, 1980.

William F. Randolph,

Acting Associate Commissioner for Regulatory Affairs.

[FR Doc. 80-27395 Filed 9-11-80; 8:45 am]

BILLING CODE 4110-03-M

---

21 CFR Part 864

[Docket No. 78N-1935]

Classification of Lectins and Protectins

AGENCY: Food and Drug Administration.

ACTION: Final rule.

SUMMARY: The Food and Drug Administration (FDA) is issuing a filnal rule classifying lectins and protectins into class II (performance standards). The effect of classifying a device into class II is to provide for the future development of one or more performance standards to assure the safet and effectiveness of the devise. This action is being taken under the Medical Device Amendments of 1976.

EFFECTIVE DATE: October 14, 1980.

FOR FURTHER INFORMATION CONTACT: Kaiser Aziz, Bureau of Medical Devices (HFK-440), Food and Drug Administration, 8757 Georgia Ave, Silver Spring, MD 20910, 301-427-7550.

SUPPLEMENTARY INFORMATION: FDA published in the Federal Register of September 11, 1979 (44 FR 52950), a proposed regulation explaining the development of the proposed regulations classifying hematology and pathology devices, the medical device classification procedures, and the activities of the Hematology and Pathology Device Section of Clinical Chemistry and Hematology Device Panel (formerly the Hematology Device Classification Panel and Pathology Device Classifiction Panel). FDA also published in that issue of the Federal Register (44 FR 53057) a proposed regulation to classify lectins and protectins into class II (performance standards). A period of 60 days was provided for interested persons to submit written comments to FDA.

No comments have been received regarding the proposed regulation to classify this device. Accordingly, the proposed regulation is being adoped without change.

On April 28, 1978, the agency terminated all of the device classification panels and reestablished them with the same functions, but with new names and with a new structure. FDA published notices of these changes in the Federal Register of May 19, 1978

(43 FR 21666, 21667, and 21668) and May 26, 1978 (43 FR 22672 and 22673). Further information regarding the device advisory committees and a list of their new names may be found in the preamble to the general provisions, published elsewhere in this issue of the Federal Register.

Therefore, under the Federal Food, Drug, and Cosmetic Act (secs. 513, 701(a), 52 Stat. 1055, 90 Stat. 540–546 (21 U.S.C. 360c, 371(a))) and under authority delegated to him (21 CFR 5.1), the Commissioner of Food Drugs is amending Part 864 in Subpart J by adding new § 864.9550, to read as follows:

§ 864.9550 Lectins and protectins.

(a) *Identification.* Lectins and protectins are proteins derived from plants and lower animals that cause cell agglutination in the presence of certain antigens. These substances are used to detect blood group antigens for in vitro diagnostic purposes.

(b) *Classification.* Class II (preformance standards).

Effective date. This regulation shall be effective October 14, 1980.

(Secs. 513, 701(a), 52 Stat. 1055, 90 Stat. 540–546 (21 U.S.C. 360c, 371(a)))

Dated August 15, 1980.

William F. Randolph,

Acting Associate Commissioner for Regulatory Affairs.

[FR Doc. 80-27396 Filed 9-11-80; 8:45 am]

BILLING CODE 4110-03-M

---

21 CFR Part 864

[Docket No. 78N-1936]

Classification of Environmental Chambers for Storage of Platelet Concentrate

AGENCY: Food and Drug Administration.

ACTION: Final rule.

SUMMARY: The Food and Drug Administration (FDA) is issuing a final rule classifying environmental chambers for storage of platelet concentrate into class II (performance standards). The effect of classifying a device into class II is to provide for the future development of one or more performance standards to assure the safety and effectiveness of the device. This action is being taken under the Medical Device Amendments of 1976.

EFFECTIVE DATE: October 14, 1980.

FOR FURTHER INFORMATION CONTACT: Kaiser Aziz, Bureau of Medical Devices (HFK-440), Food and Drug Administration, 8757 Georgia Ave., Silver Spring, MD 20910, 301-427-7550.

SUPPLEMENTARY INFORMATION: FDA published in the Federal Register of September 11, 1979 (44 FR 52950), a proposed regulation explaining the development of the proposed regulations classifying hematology and pathology devices, the medical device classification procedures, and the activities of the Hematology and Pathology Device Section of the Clinical Chemistry and Hematology Devices Panel (formerly the Hematology Device Classification Panel and the Pathology Device Classification Panel). FDA also published in that issue of the Federal Register (44 FR 53058) a proposed regulation to classify environmental chambers for storage of platelet concentrate into class II (performance standards). A period of 60 days was provided for interested persons to submit written comments to FDA.

The one comment received on the proposal suggested that insufficient information exists to write a performance standard that would provide reasonable assurance of the safety and effectiveness of the device. The comment cited the controversy over the proper conditions for platelet storage as evidence that a standard cannot be written. The comment also stated that FDA gives no indication of an acceptable methodology for determining which of the two types of storage conditions provides the greater assurance of safety and effectiveness. The comment suggested that these devices be provisionally placed into class III until FDA recognizes an acceptable methodology for making this determination.

FDA disagrees with the comment and is classifying the device into class II as proposed.

On November 19, 1979, FDA held a public meeting of the Hematology Section of the Clinical Chemistry and Hematology Devices Panel. At the meeting, a representative of the Health Research Group (HRG) presented HRG's view that environmental chambers for storage of platelet concentrate should be classified into class III rather than class II as proposed.

After considering the comments, the additional testimony presented at the meeting, and the Section's recommendation to classify the device into class II, FDA has concluded that there is sufficient information available to establish a performance standard for the device and is classifying the device into class II as proposed. Although 22° C may be a better storage temperature than 4° C, these devices must merely be able to hold either of these temperatures, and a performance standard assuring the ability to hold a given temperature can be written.

In addition, as suggested in an article by Holme et al. (Ref. 1), there are a number of in vitro tests that may be utilized to assess the viability of platelets stored under differing conditions.

Therefore, the proposed regulation is being adopted without change.

On April 28, 1978, the agency terminated all of the device classification panels and reestablished them with the same functions, but with new names and with a new structure. FDA published notices of these changes in the Federal Register of May 19, 1978 (43 FR 21666, 21667, and 21668) and May 26, 1978 (43 FR 22672 and 22673). Further information regarding the device advisory committees and a list of their new names may be found in the preamble to the general provisions, published elsewhere in this issue of the Federal Register.

Reference

1. Holme, S., K. Vaidja, and S. Murphy, "Platelet Storage at 22° C: Effect of Type of Agitation on Morphology, Viability, and Function In Vitro," *Blood*, 52(2):425–435, 1978.

Therefore, under the Federal Food, Drug, and Cosmetic Act (secs. 513, 701(a), 52 Stat. 1055, 90 Stat. 540–546 (21 U.S.C. 360c, 371(a))) and under authority delegated to him (21 CFR 5.1), the Commissioner of Food and Drugs is amending Part 864 in Subpart J by adding new § 864.9575, to read as follows:

§ 864.9575 Environmental chamber for storage of platelet concentrate.

(a) *Identification.* An environmental chamber for storage of platelet concentrate is a device used to hold platelet-rich plasma within a preselected temperature range.

(b) *Classification.* Class II (performance standards).

Effective date. This regulation shall be effective October 14, 1980.

(Secs. 513, 701(a), 52 Stat. 1055, 90 Stat. 540–546 (21 U.S.C. 360c, 371(a)))

Dated: August 15, 1980.

William F. Randolph,

Acting Associate Commissioner for Regulatory Affairs.

[FR Doc. 80-27397 Filed 9-11-80; 8:45 am]

BILLING CODE 4110-03-M

---

21 CFR Part 864

[Docket No. 78N-1937]

Classification of Potentiating Media for in Vitro Diagnostic Use

AGENCY: Food and Drug Administration.

ACTION: Final rule.

SUMMARY: The Food and Drug Administration (FDA) is issuing a final rule classifying potentiating media for in vitro diagnostic use into class II (performance standards). The effect of classifying a device into class II is to provide for the future development of one or more performance standards to assure the safety and effectiveness of the device. This action is being taken under the Medical Device Amendments of 1976.

EFFECTIVE DATE: October 14, 1980.

FOR FURTHER INFORMATION CONTACT: Kaiser Aziz, Bureau of Medical Devices (HFK-440), Food and Drug Administration, 8757 Georgia Ave., Silver Spring, MD 20910, 301-427-7550.

SUPPLEMENTARY INFORMATION: FDA published in the Federal Register of September 11, 1979 (44 FR 52950), a proposed regulation explaining the development of the proposed regulations classifying hematology and pathology devices, the medical device classification procedures, and the activities of the Hematology and Pathology Device Section of the Clinical Chemistry and Hematology Devices Panel (formerly the Hematology Device Classification Panel and the Pathology Device Classification Panel). FDA also published in that issue of the Federal Register (44 FR 53059) a proposed regulation to classify potentiating media for in vitro diagnostic use into class II (performance standards). A period of 60 days was provided for interested persons to submit written comments to FDA.

No comments have been received regarding the proposed regulation to classify this device. Accordingly, the proposed regulation is being adopted without change.

On April 28, 1978, the agency terminated all of the device classification panels and reestablished them with the same functions, but with new names and with a new structure. FDA published notices of these changes in the Federal Register of May 19, 1978 (43 FR 21666, 21667, and 21668) and May 26, 1978 (43 FR 22672 and 22673). Further information regarding the device advisory committees and a list of their new names may be found in the preamble to the general provisions, published elsewhere in this issue of the Federal Register.

Therefore, under the Federal Food, Drug, and Cosmetic Act (secs. 513, 701(a), 52 Stat. 1055, 90 Stat. 540-546 (21 U.S.C. 360c, 371(a))) and under authority delegated to him (21 CFR 5.1), the Commissioner of Food and Drugs is amending Part 864 in Subpart J by adding new § 864.9600, to read as follows:

§ 864.9600 Potentiating media for in vitro diagnostic use.

(a) *Identification.* Potentiating media for in vitro diagnostic use are media, such as bovine albumin, that are used to suspend red cells and to enhance cell reactions for antigen-antibody testing.

(b) *Classification.* Class II (performance standards).

Effective date. This regulation shall be effective October 14, 1980.

(Secs. 513, 701(a), 52 Stat. 1055, 90 Stat. 540-546 (21 U.S.C. 360c, 371(a)))

Dated: August 15, 1980.

William F. Randolph,

Acting Associate Commissioner for Regulatory Affairs.

[FR Doc. 80-27398 Filed 9-11-80; 8:45 am]

BILLING CODE 4110-03-M

---

21 CFR Part 864

[Docket No. 78N-1938]

Classification of Quality Control Kits For Blood Banking Reagents

AGENCY: Food and Drug Administration.

ACTION: Final rule.

SUMMARY: The Food and Drug Administration (FDA) is issuing a final rule classifying quality control kits for blood banking reagents into class II (performance standards). The effect of classifying a device into class II is to provide for the future development of one or more performance standards to assure the safety and effectiveness of the device. This action is being taken under the Medical Device Amendments of 1976.

EFFECTIVE DATE: October 14, 1980.

FOR FURTHER INFORMATION CONTACT: Kaiser Aziz, Bureau of Medical Devices (HFK-440), Food and Drug Administration, 8757 Georgia Ave., Silver Spring, MD 20910, 301-427-7550.

SUPPLEMENTARY INFORMATION: FDA published in the Federal Register of September 11, 1979 (44 FR 52950), a proposed regulation explaining the development of the proposed regulations classifying hematology and pathology devices, the medical device classification procedures, and the activities of the Hematoloy and Pathology Device Section of the Clinical Chemistry and Hematology Devices Panel (formerly the Hematology Device Classification Panel and the Pathology Device Classification Panel). FDA also published in that issue of the Federal Register (44 FR 53060) a proposed regulation to classify quality control kits for blood banking reagents into class II (performance standards). A period of 60 days was provided for interested persons to submit written comments to FDA.

No comments have been received regarding the proposed regulation to classify this device. Accordingly, the proposed regulation is being adopted with a minor clarifying change.

On April 28, 1978, the agency terminated all of the device classification panels and reestablished them with the same functions, but with new names and with a new structure. FDA published notices of these changes in the Federal Register of May 19, 1978 (43 FR 21666, 21667, and 21668) and May 26, 1978 (43 FR 22672 and 22673). Further information regarding the device advisory committees and a list of their new names may be found in the preamble to the general provisions, published elsewhere in this issue of the Federal Register.

Therefore, under the Federal Food, Drug, and Cosmetic Act (secs. 513, 701(a), 52 Stat. 1055, 90 Stat. 540-546 (21 U.S.C. 360c, 371(a))) and under authority delegated to him (21 CFR 5.1), the Commissioner of Food and Drugs is amending Part 864 in Subpart J by adding new § 864.9650, to read as follows:

§ 864.9650 Quality control kit for blood banking reagents.

(a) *Identification.* A quality control kit for blood banking reagents is a device that consists of sera, cells, buffers, and antibodies used to determine the specificity, potency, and reactivity of the cells and reagents used for blood banking.

(b) *Classification.* Class II (performance standards).

Effective date. This regulation shall be effective October 14, 1980.

(Secs. 513, 701(a), 52 Stat. 1055, 90 Stat. 540-546 (21 U.S.C. 360c, 371(a)))

Dated: August 15, 1980.

William F. Randolph,

Acting Associate Commissioner for Regulatory Affairs.

[FR Doc. 80-27399 Filed 9-11-80; 8:45 am]

BILLING CODE 4110-03-M

---

21 CFR Part 864

[Docket No. 78N-1939]

Classification of Blood Storage Refrigerators and Blood Storage Freezers

AGENCY: Food and Drug Administration.

ACTION: Final rule.

SUMMARY: The Food and Drug Administration (FDA) is issuing a final rule classifying blood storage refrigerators and blood storage freezers into class II (performance standards). The effect of classifying a device into class II is to provide for the future development of one or more performance standards to assure the safety and effectiveness of the device. This action is being taken under the Medical Device Amendments of 1976.

EFFECTIVE DATE: October 14, 1980.

FOR FURTHER INFORMATION CONTACT: Kaiser Aziz, Bureau of Medical Devices (HFK-440), Food and Drug Administration, 8757 Georgia Ave., Silver Spring, MD 20910, 301-427-7550.

SUPPLEMENTARY INFORMATION: FDA published in the Federal Register of September 11, 1979 (44 FR 52950), a proposed regulation explaining the development of the proposed regulations classifying hematology and pathology devices, the medical device classification procedures, and the activities of the Hematology and Pathology Device Section of the Clinical Chemistry and Hematology Devices Panel (formerly the Hematology Device Classification Panel and the Pathology Device Classification Panel). FDA also published in that issue of the Federal Register (44 FR 53061) a proposed regulation to classify blood storage refrigerators and blood storage freezers into class II (performance standards). A period of 60 days was provided for interested persons to submit written comments to FDA.

No comments have been received regarding the proposed regulation to classify this device. Accordingly, the proposed regulation is being adopted with a minor clarifying change.

On April 28, 1978, the agency terminated all of the device classification panels and reestablished them with the same functions, but with new names and with a new structure. FDA published notices of these changes in the Federal Register of May 19, 1978 (43 FR 21666, 21667, and 21668) and May 26, 1978 (43 FR 22672 and 22673). Further information regarding the device advisory committees and a list of their new names may be found in the preamble to the general provisions, published elsewhere in this issue of the Federal Register.

Therefore, under the Federal Food, Drug, and Cosmetic Act (secs. 513, 701(a), 52 Stat. 1055, 90 Stat. 540-546 (21 U.S.C. 360c, 371(a))) and under authority delegated to him (21 CFR 5.1), the Commissioner of Food and Drugs is amending Part 864 in Subpart J by adding new § 864.9700, to read as follows:

§ 864.9700 Blood storage refrigerator and blood storage freezer.

(a) *Identification.* A blood storage refrigerator and a blood storage freezer are devices intended for medical purposes that are used to preserve blood and blood products by storing them at cold or freezing temperatures.

(b) *Classification.* Class II (performance standards).

Effective date. This regulation shall be effective October 14, 1980.

(Secs. 513, 701(a), 52 Stat. 1055, 90 Stat. 540-546 (21 U.S.C. 360c, 371(a)))

Dated: August 15, 1980.

William F. Randolph,

Acting Associate Commissioner for Regulatory Affairs.

[FR Doc. 80-27400 Filed 9-11-80; 8:45 am]
BILLING CODE 4110-03-M

---

21 CFR Part 864

[Docket No. 78N-1940]

Classification of Heat-Sealing Devices

AGENCY: Food and Drug Administration.

ACTION: Final rule.

SUMMARY: The Food and Drug Administration (FDA) is issuing a final rule classifying heat-sealing devices into class I (general controls). The effect of classifying a device into class I is to require that the device meet only the general controls applicable to all devices. This action is being taken under the Medical Device Amendments of 1976.

EFFECTIVE DATE: October 14, 1980.

FOR FURTHER INFORMATION CONTACT: Kaiser Aziz, Bureau of Medical Devices (HFK-440), Food and Drug Administration, 8757 Georgia Ave., Silver Spring, MD 20910, 301-427-7550.

SUPPLEMENTARY INFORMATION: FDA published in the Federal Register of September 11, 1979 (44 FR 52950), a proposed regulation explaining the development of the proposed regulations classifying hematology and pathology devices, the medical device classification procedures, and the activities of the Hematology and Pathology Device Section of the Clinical Chemistry and Hematology Devices Panel (formerly the Hematology Device Classification Panel and the Pathology Device Classification Panel). FDA also published in that issue of the Federal Register (44 FR 53062) a proposed regulation to classify heat-sealing devices into class I (general controls). A period of 60 days was provided for interested persons to submit written comments to FDA.

No comments have been received regarding the proposed regulation to classify this device. Accordingly, the proposed regulation is being adopted with a minor clarifying change.

On April 28, 1978, the agency terminated all of the device classification panels and reestablished them with the same functions, but with new names and with a new structure. FDA published notices of these changes in the Federal Register of May 19, 1978 (43 FR 21666, 21667, and 21668) and May 26, 1978 (43 FR 22672 and 22673). Further information regarding the device advisory committees and a list of their new names may be found in the preamble to the general provisions, published elsewhere in this issue of the Federal Register.

Therefore, under the Federal Food, Drug, and Cosmetic Act (secs. 513, 701(a), 52 Stat. 1055, 90 Stat. 540-546 (21 U.S.C. 360c, 371(a))) and under authority delegated to him (21 CFR 5.1), the Commissioner of Food and Drugs is amending Part 864 in Subpart J by adding new § 864.9750, to read as follows:

§ 864.9750 Heat-sealing device.

(a) *Identification.* A heat-sealing device is a device intended for medical purposes that uses heat to seal plastic bags containing blood or blood components.

(b) *Classification.* Class I (general controls).

Effective date. This regulation shall be effective October 14, 1980.

(Secs. 513, 701(a), 52 Stat. 1055, 90 Stat. 540-546 (21 U.S.C. 360c, 371(a)))

Dated: June 5, 1980.

William F. Randolph,

Acting Associate Commissioner for Regulatory Affairs.

[FR Doc. 80-27401 Filed 9-11-80; 8:45 am]
BILLING CODE 4110-03-M

---

21 CFR Part 864

[Docket No. 78N-1942]

Classification of Transfer Sets

AGENCY: Food and Drug Administration.

ACTION: Final rule.

SUMMARY: The Food and Drug Administration (FDA) is issuing a final rule classifying transfer sets into class II (performance standards). The effect of classifying a device into class II is to provide for the future development of one or more performance standards to assure the safety and effectiveness of the device. This action is being taken

under the Medical Device Amendments of 1976.

EFFECTIVE DATE: October 14, 1980.

FOR FURTHER INFORMATION CONTACT: Kaiser Aziz, Bureau of Medical Devices (HFK-440), Food and Drug Administration, 8757 Georgia Ave, Silver Spring, MD 20910, 301-427-7550.

SUPPLEMENTARY INFORMATION: FDA published in the Federal Register of September 11, 1979 (44 FR 52950), a proposed regulation explaining the development of the proposed regulations classifying hematology and pathology devices, the medical device classification procedures, and the activities of the Hematology and Pathology Device Section of the Clinical Chemistry and Hematology Devices Panel (formerly the Hematology Device Classification Panel and the Pathology Device Classification Panel). FDA also published in that issue of the Federal Register (44 FR 53062) a proposed regulation to classify transfer sets into class II (performance standards). A period of 60 days was provided for interested persons to submit written comments to FDA.

No comments have been received regarding the proposed regulation to classify this device. Accordingly, the proposed regulation is being adopted with a minor clarifying change.

On April 28, 1978, the agency terminated all of the device classification panels and reestablished them with the same functions, but with new names and with a new structure. FDA published notices of these changes in the Federal Register of May 19, 1978 (43 FR 21666, 21667, and 21668) and May 26, 1978 (43 FR 22672 and 22673). Further information regarding the device advisory committees and a list of their new names may be found in the preamble to the general provisions, published elsewhere in this issue of the Federal Register.

Therefore, under the Federal Food, Drug, and Cosmetic Act (secs. 513, 701(a), 52 Stat. 1055, 90 Stat. 540-546 (21 U.S.C. 360c, 371(a))) and under authority delegated to him (21 CFR 5.1.), the Commissioner of Food and Drugs is amending Part 864 in Subpart J by adding new § 864.9875, to read as follows:

§ 864.9875 Transfer set.

(a) *Identification.* A transfer set is a device intended for medical purposes that consists of a piece of tubing with suitable adaptors used to transfer blood or plasma from one container to another.

(b) *Classification.* Class II (performance standards).

Effective date. This regulation shall be effective October 14, 1980.

(Secs. 513, 701(a), 52 Stat. 1055, 90 Stat. 540-546 (21 U.S.C. 360c, 371(a)))

Dated: August 15, 1980.

William F. Randolph,

Acting Associate Commissioner for Regulatory Affairs.

[FR Doc. 80-27402 Filed 9-11-80; 8:45 am]

BILLING CODE 4110-03-M

Reader Aids

Federal Register
Vol. 45, No. 179
Friday, September 12, 1980

INFORMATION AND ASSISTANCE

Questions and requests for specific information may be directed to the following numbers. General inquiries may be made by dialing 202-523-5240.

Federal Register, Daily Issue:

202-783-3238	Subscription orders and problems (GPO)
	"Dial-a-Reg" (recorded summary of highlighted documents appearing in next day's issue):
202-523-5022	Washington, D.C.
312-663-0884	Chicago, Ill.
213-688-6694	Los Angeles, Calif.
202-523-3187	Scheduling of documents for publication
523-5240	Photo copies of documents appearing in the Federal Register
523-5237	Corrections
633-6930	Public Inspection Desk
523-5227	Index and Finding Aids
523-5235	Public Briefings: "How To Use the Federal Register."

Code of Federal Regulations (CFR):

523-3419	
523-3517	
523-5227	Index and Finding Aids

Presidential Documents:

523-5233	Executive Orders and Proclamations
523-5235	Public Papers of the Presidents, and Weekly Compilation of Presidential Documents

Public Laws:

523-5266 -5282	Public Law Numbers and Dates, Slip Laws, U.S. Statutes at Large, and Index
275-3030	Slip Law Orders (GPO)

Other Publications and Services:

523-5239	TTY for the Deaf
523-5230	U.S. Government Manual
523-3408	Automation
523-4534	Special Projects
523-3517	Privacy Act Compilation

FEDERAL REGISTER PAGES AND DATES, SEPTEMBER

58097-58324 2
58325-58502 3
58503-58800 4
58801-59134 5
59135-59296 8
59297-59548 9
59549-59830 10
59831-60398 11
60399-60876 12

CFR PARTS AFFECTED DURING SEPTEMBER

At the end of each month, the Office of the Federal Register publishes separately a list of CFR Sections Affected (LSA), which lists parts and sections affected by documents published since the revision date of each title.

1 CFR
51 59297
475 58505
476 58809
Proposed Rules:
Ch. I 59174

3 CFR
Administrative Orders:
Presidential Determination:
September 8, 1980 59549
Executive Orders:
10402 (Revoked by 12234) 58801
11239 (Superseded by 12234) 58801
12154 (Amended by 12236 and 12237) 58805, 58807
12198 (Amended by EO 12233) 58503
12233 58503
12234 58801
12235 58803
12336 58805
12337 58807
Proclamations:
4786 58325
4787 58327
4788 58329
4789 58331
4790 59135
4791 60399

5 CFR
213 ..... 58810-58813, 59297
351 60401

7 CFR
6 58333
14 58505
47 59298
331 60402
760 59299
908 ..... 58509, 59551, 59831
910 ..... 58097, 58814, 60403
932 58097
946 58098
947 60404
1040 60406
1421 ..... 58333-58334, 60407
1427 59831
1464 58509
1951 58814
Proposed Rules:
810 60848
948 60446
981 60447
1079 58131
1139 58366
1940 58557
1942 58557
1980 58557
2852 59325

8 CFR
238 ..... 58098, 58510
Proposed Rules:
Ch. I 58368
212 58131
235 58131
299 58131

9 CFR
Proposed Rules:
78 59831
313 60448
317 58815
318 58815
381 58815

10 CFR
205 59786
212 ..... 58510, 59137
1506 60371
Proposed Rules:
205 58871
211 ..... 58788, 59818
212 58871
430 58132
1534 60362

11 CFR
100 58820
106 58820
110 58820
140 58820
141 58820
142 58820
143 58820
144 58820
145 58820
146 58820
9001 58820
9002 58820
9003 58820
9004 58820
9005 58820
9006 58820
9007 58820

12 CFR
204 ..... 58099, 58820
760 58101
Proposed Rules:
336 58876

13 CFR
101 59299
Proposed Rules:
121 59587

14 CFR

11 ... 60154
21 ... 60154
23 ... 60154
25 ... 60154
27 ... 60154
29 ... 60154
31 ... 60154
33 ... 60154
35 ... 60154
39 ... 58102, 58103, 58512, 59138-59141, 59832-59837
43 ... 60154
45 ... 60154
71 ... 58104, 58105, 59837-59839
73 ... 58106
91 ... 60154
97 ... 59141
152 ... 58107
154 ... 58107
155 ... 58107
204 ... 60408
223 ... 58821

Proposed Rules:
Ch. I ... 59897
39 ... 58133-58136, 59901, 59904
71 ... 58136, 58140, 58141, 59174
73 ... 58142
121 ... 59295, 59905
171 ... 59256

15 CFR

368 ... 59300
369 ... 59300
370 ... 58334, 59300
371 ... 59301
372 ... 58334, 59300
377 ... 58334, 59300, 59302
385 ... 59300
390 ... 59300

Proposed Rules:
Ch. III ... 58562
806 ... 60850

16 CFR

13 ... 60408, 60409

Proposed Rules:
305 ... 59588

17 CFR

140 ... 58514
229 ... 58822
230 ... 58822
239 ... 58822
240 ... 58822, 60410
241 ... 59840
249 ... 58822, 58831, 59551

Proposed Rules:
249 ... 58879

18 CFR

4 ... 58368
35 ... 58335
201 ... 59305
204 ... 59305
260 ... 59305
272 ... 58374
375 ... 58368
282 ... 59305, 59857
284 ... 60418
701 ... 58834

19 CFR

355 ... 58516, 59552

20 CFR

404 ... 58107, 59589
416 ... 59143, 59589

Proposed Rules:
416 ... 58563

21 CFR

74 ... 60419
172 ... 58835, 58836
177 ... 58837
178 ... 58837, 60422
182 ... 58107, 58837
201 ... 60419
203 ... 60754
436 ... 60423
442 ... 60423
558 ... 58840
812 ... 58841
864 ... 60575-60651

Proposed Rules:
7 ... 60449
14 ... 60449
101 ... 58880
193 ... 58494
357 ... 59540
561 ... 58496
1030 ... 58143

22 CFR

6 ... 58108
6a ... 58108
161 ... 59553
171 ... 58108

Proposed Rules:
41 ... 59175

23 CFR

1251 ... 59143

24 CFR

107 ... 59510
115 ... 59305
200 ... 59857
201 ... 59867
203 ... 59561
215 ... 59145
221 ... 60390
234 ... 60390, 60425
235 ... 60390
236 ... 59147
250 ... 59792
510 ... 59702
570 ... 59306, 59496, 59868
600 ... 59868
700 ... 58336
800 ... 58337
841 ... 60836
865 ... 59502
882 ... 59308
886 ... 59149
889 ... 59309
890 ... 60394
3282 ... 59311

Proposed Rules:
Subtitle A ... 59062
Subtitle B ... 59062
200 ... 58374
220 ... 59589
221 ... 59589
231 ... 59589
236 ... 59589
430 ... 59907
888 ... 58375

25 CFR

Proposed Rules:
700 ... 59175

26 CFR

1 ... 58520
53 ... 58520
301 ... 58520

Proposed Rules:
1 ... 58143, 60450

28 CFR

2 ... 59870, 60427

Proposed Rules:
Ch. I ... 58368
2 ... 60451

29 CFR

92 ... 58312
1601 ... 59565
1910 ... 60656
1952 ... 60429
2606 ... 58339

Proposed Rules:
29 ... 58143
1928 ... 58881
1960 ... 58144

30 CFR

722 ... 58780
723 ... 58780
843 ... 58780
845 ... 58780
924 ... 58520

Proposed Rules:
916 ... 58569
918 ... 58576
926 ... 58377
931 ... 58594

31 CFR

515 ... 58843

Proposed Rules:
10 ... 58594

32 CFR

288 ... 59566
814 ... 60430
888 ... 58117

33 CFR

207 ... 60430

34 CFR

Proposed Rules:
100 ... 58145

35 CFR

253 ... 59150

36 CFR

7 ... 60430
28 ... 59569
1228 ... 58339

Proposed Rules:
1201 ... 59590

38 CFR

21 ... 59311

Proposed Rules:
21 ... 59591

39 CFR

310 ... 59871
320 ... 59871

Proposed Rules:
111 ... 60452
310 ... 60453

40 CFR

51 ... 59874
52 ... 58340, 58526-58528, 59313, 59314, 59577-59580
81 ... 59150, 59315
122 ... 59317
180 ... 58121, 60430
409 ... 59152

Proposed Rules:
Ch. I ... 59180
52 ... 58146, 58598, 58599, 58881, 58923, 59177, 59178, 59329, 59334, 59339, 59591, 59597
55 ... 58381
65 ... 59341
81 ... 59179
116 ... 59907
117 ... 59907
120 ... 59598
122 ... 59343
162 ... 58600
180 ... 58497-58500, 58600
415 ... 58383
717 ... 58384

41 CFR

Ch. 18 ... 58843-58857
5A-1 ... 58341
Ch. 101 ... 58122

42 CFR

57 ... 60431
122 ... 59132
405 ... 58123, 59153

Proposed Rules:
405 ... 59734
447 ... 59734

43 CFR

2880 ... 59879

44 CFR

9 ... 59520, 59538
64 ... 58529-58531
65 ... 59341
67 ... 58342-58346, 60437
311 ... 59880

Proposed Rules:
59 ... 59346
60 ... 59346
67 ... 58148, 58149, 58601, 59348, 59599, 59602, 60453
360 ... 59344

45 CFR

134 ... 58362
233 ... 58125
400 ... 59318
1050 ... 59153
1061 ... 58363, 58534
1068 ... 59153

Proposed Rules
100a ... 59349
100b ... 59349
122b ... 60382

46 CFR

Proposed Rules:
521 58923
536 58385

47 CFR

1 59880
2 59880
73 ..... 58539, 58540, 59887
76 60186
83 60438
90 59880

Proposed Rules:
Ch. I 58608
73 ..... 58150, 58609–58629
59350, 59360, 59361, 59908

49 CFR

25 59154
173 59887
178 59887
195 59161–59166
571 59894
601 58540
830 59894
1033 ..... 58126–58128, 58865,
59167, 59168
1036 ..... 59168, 59169
1051 58128
1053 58865
1104 58128
1300 60438
1303 60438
1304 60438
1306 60438
1307 ..... 58128, 58865, 60438
1308 60438
1310 ..... 58129, 60438

Proposed Rules:
Ch. III 59177
173 58632
178 58632
658 60306
1048 60455
1080 59909
1111 58632
1331 58166

50 CFR

20 58540
32 ..... 58552–58554, 58867,
58869, 59171, 59172, 59581,
60441–60444
33 58554
285 59586
611 58870
674 59172

Proposed Rules:
17 ..... 58166, 58168, 58171,
59909
23 60455
32 ..... 59602, 59603
33 59603
80 59914
601 58632
611 ..... 59914, 60457
656 60457
672 59914
810 60455

AGENCY PUBLICATION ON ASSIGNED DAYS OF THE WEEK

The following agencies have agreed to publish all documents on two assigned days of the week (Monday/Thursday or Tuesday/Friday). This is a voluntary program. (See OFR NOTICE FR 32914, August 6, 1976.)

Monday	Tuesday	Wednesday	Thursday	Friday
DOT/SECRETARY	USDA/ASCS		DOT/SECRETARY	USDA/ASCS
DOT/COAST GUARD	USDA/FNS		DOT/COAST GUARD	USDA/FNS
DOT/FAA	USDA/FSQS		DOT/FAA	USDA/FSQS
DOT/FHWA	USDA/REA		DOT/FHWA	USDA/REA
DOT/FRA	MSPB/OPM		DOT/FRA	MSPB/OPM
DOT/NHTSA	LABOR		DOT/NHTSA	LABOR
DOT/RSPA	HHS/FDA		DOT/RSPA	HHS/FDA
DOT/SLSDC			DOT/SLSDC	
DOT/UMTA			DOT/UMTA	
CSA			CSA	

Documents normally scheduled for publication on a day that will be a Federal holiday will be published the next work day following the holiday. Comments on this program are still invited.
Comments should be submitted to the Day-of-the-Week Program Coordinator. Office of the Federal Register, National Archives and Records Service, General Services Administration, Washington, D.C. 20408

NOTE: As of September 2, 1980, documents from the Animal and Plant Health Inspection Service, Department of Agriculture, will no longer be assigned to the Tuesday/Friday publication schedule.

REMINDERS

The "reminders" below identify documents that appeared in issues of the **Federal Register** 15 days or more ago. Inclusion or exclusion from this list has no legal significance.

Rules Going Into Effect Today

FEDERAL EMERGENCY MANAGEMENT AGENCY

53956 8-13-80 / Disaster relief; public assistance regulations

GENERAL SERVICES ADMINISTRATION

48142 7-18-80 / Procurement, qualified products

HEALTH AND HUMAN SERVICES DEPARTMENT

Food and Drug Administration—

32296 5-16-80 / Labeling requirements for limulus anebocyte lysate

HOUSING AND URBAN DEVELOPMENT DEPARTMENT

Office of the Assistant Secretary for Community Planning and Development—

51516 8-1-80 / Community development block grants for Indian tribes and Alaskan natives, Housing Assistance Plan (HAP)

INTERSTATE COMMERCE COMMISSION

53827 8-13-80 / Rail carriers; common carrier status of States, State agencies and instrumentalities, and political subdivisions; rules and exemptions (See 45 FR 57129, 8-27-80)

Rule Going Into Effect, September 13, 1980

HOUSING AND URBAN DEVELOPMENT DEPARTMENT

Federal Housing Commissioner, Office of Assistant Secretary for Housing—

53806 8-13-80 / Mortgage insurance and assistance payments for home ownership and project rehabilitation; waiver provision

List of Public Laws

Note: No public bills which have become law were received by the Office of the Federal Register for inclusion in today's List of Public Laws.

Last Listing September 11, 1980

9-12-80
Vol. 45—No. 179
BOOK 2:
Pages
60653-60876

Federal Register

Book 2 of 2 Books
Friday, September 12, 1980

60656 Part III—Labor/OSHA:
Fire Protection; Means of Egress; Hazardous Materials

60730 Part IV—Labor/ESA:
Minimum Wages for Federal and Federally Assisted Construction; General Wage Determination Decisions

60754 Part V—HHS/FDA:
Prescription Drugs; Patient Package Inserts Requirements and Draft Guideline Patient Package Inserts

60820 Part VI—HUD/FHC:
Federal Housing Commissioner—Delegations of Authority; Revisions and Update

60832 Part VII—EEOC:
Layoffs and Equal Employment Opportunity

60836 Part VIII—HUD/FHC:
Low-Income Public Housing Development; Processing Procedures

60848 Part IX—USDA/FGIS:
Standards for Barley, Request for Public Comment

60850 Part X—Commerce/Bureau of Economic Analysis:
Direct Investment Surveys; Content of Survey Forms; Public Meeting

Federal Register

Friday
September 12, 1980

Part III

Department of Labor

Occupational Safety and Health Administration

Fire Protection; Means of Egress; Hazardous Materials; Final Rule

DEPARTMENT OF LABOR

Occupational Safety and Health Administration

29 CFR Part 1910

Occupational Safety and Health Standards—Fire Protection; Means of Egress; Hazardous Materials

AGENCY: Occupational Safety and Health Administration, U.S. Department of Labor.

ACTION: Final rule.

SUMMARY: In these final standards, the Occuaptional Safety and Health Administration (OSHA) is revising a major portion of its safety standards dealing with fire protection requirements necessary to protect employees from unwanted fire in the workplace. These standards provide general design and installation requirements for portable fire suppression equipment (portable fire extinguishers and standpipe and hose systems), fixed suppression systems (automatic sprinkler systems and various other fixed extinguishing systems), fire detection systems, and local fire and emergency alarm signaling systems. The standards also provide specific criteria for fire brigade equipment and training. In addition, certain portions of the OSHA standards relating to hazardous materials and means of egress are also amended to be consistent with the revisions to the fire protection requirements.

The standards are intended to minimize employee exposure to hazardous situations involving fire in the workplace and to provide for fire protection equipment and services for the safe evacuation or rescue of employees endangered by unwanted workplace fires. The standards will replace the applicable standards previously promulgated under section 6(a) of the Occupational Safety and Health Act and represent another step in the ongoing process of reviewing OSHA's standards and promulgating updated, mainly performance-oriented, requirements.

EFFECTIVE DATE: The standards promulgated by this final rule become effective on: December 11, 1980.

FOR FURTHER INFORMATION CONTACT: Standard development inquiries: Mr. Michael B. Moore or Mr. Glen E. Gardner, Occupational Safety and Health Administration, Room N-3463, U.S. Department of Labor, Washington, D.C. 20210, (202) 523-7225.

Compliance inquiries: Mr. William Simms, Occupational Safety and Health Administration, Room N-3106, U.S. Department of Labor, Washington, D.C. 20210, (202) 523-8124.

For additional copies of these standards, contact: OSHA Office of Publications, Room S1212, U.S. Department of Labor, Washington, D.C. 20210, (202) 523-6138.

SUPPLEMENTARY INFORMATION:

I. History

In 1970, Congress directed OSHA, under section 6 of the Occupational Safety and Health Act of 1970 (84 Stat. 1590, 29 U.S.C. 651 et seq.) (the Act), to promulgate safety and health standards which would implement the Congressional policy of assuring, so far as possible, every working man and woman in the Nation safe and healthful working conditions. Congress further required that any standards initially promulgated under section 6(a) of the Act be taken from existing national consensus standards and established Federal standards.

On May 29, 1971, OSHA promulgated its first set of general industry occupational safety and health standards as 29 CFR Part 1910 (36 FR 10466). Among other requirements, these standards contained regulations covering means of egress (Subpart E), hazardous materials (Subpart H), and fire protection (Subpart L).

After the initial standards were promulgated, OSHA amended certain provisions of these standards, pursuant to section 6(b) of the Act. For example, on January 9, 1974, at 39 FR 1437, Table L-3 in Subpart L was amended to permit 12-year hydrostatic test intervals for fire extinguishers with aluminum shells and § 1910.158(b)(3) was changed to extend the maximum lengths of fire hose which could be used on standpipe systems. These changes reflected the continued up-dating of the consensus standards by the various standards groups and the continued advancement in the technical state-of-the-art which provided more flexible means of compliance not permitted by the original OSHA standards. OSHA, therefore, began amending its standards to reflect acceptable alternatives to the requirements in the standards.

During this period of time, OSHA received petitions calling for further changes in the standards. The majority of these petitions called for the recognition of national consensus standards other than those already contained in OSHA's standards and for the amendment of the safety standards to delete provisions not directly related to occupational safety and health.

As part of the process of deciding whether and how to revise Supart L, OSHA gave employers and employees an early opportunity to suggest how the standards should be revised, to submit information, and to comment on several general and specific issues. This notice was published in the Federal Register on April 23, 1976 (41 FR 17255).

In addition, the agency scheduled and invited public participation at three separate public meetings in San Francisco, Dallas, and Boston during June, 1976. The purpose of the meetings was to afford the public an opportunity to present oral testimony as well as submit written comments concerning the issues raised in the April 23, 1976 Federal Register notice. The written comments received and the transcripts of those meetings have been entered into the OSHA record of this rulemaking.

Upon completion of the public meetings and the close of the comment period, OSHA reviewed all the data presented and determined that a major revision of Subpart L was necessary.

On December 22, 1978, OSHA published its proposed revisions to Subpart L in the Federal Register (43 FR 60048). OSHA also proposed certain revisions to Subparts E and H of Part 1910 which were necessary to complement the revisions proposed for Subpart L. The notice requested that comments on the proposed revisions be submitted by March 16, 1979. The comment period was subsequently extended to April 16, 1979 (44 FR 17757). When the comment period closed, a total of 195 comments had been received by OSHA.

In the proposal, OSHA also invited requests for public hearings on any issues raised by the proposal. Several commenters requested that a public hearing be held on certain aspects of the proposed section for fire brigades, § 1910.165.

On June 1, 1979, OSHA published in the Federal Register (44 FR 31670) a "Notice of Public Hearing and Request for Written Comments" (Ex. 21). The issues for the public hearing were listed as follows:

1. (a) Whether positive-pressure breathing apparatus should be the only acceptable respirator for interior structural fire fighting?

(b) What protection factor should be provided by respirators to be used for interior structural fire fighting? How should it be measured?

2. (a) Whether OSHA should require employers to permit employees to refuse to perform fire brigade duties in any workplace?

(b) Whether employers should be required to ensure that brigade members, who are expected to perform interior structural fire fighting, are physically capable of performing the duties assigned to them? If so, how should "physically capable" be defined? What physical test requirements are appropriate for part-time or full-time fire brigade members?

(c) What would be the economic impact if OSHA did permit employees to refuse to perform fire brigade duties? How many employees are now required to join fire brigades as a condition of employment? Are these employees subject to discharge if they become physically unable to continue fire brigade duties or if they refuse to perform these duties? How often does this occur?

In addition, OSHA raised a third issue related to personal protective equipment for fire brigade members and requested written information and comments to assist the agency in resolving certain questions related to the use of this equipment. The close of the written comment period on that issue was September 14, 1979, and over 15 written comments were received.

Hearings on the proposed fire brigade standard were held in Washington, D.C. (August 28–30, 1979), Houston, Texas (September 5–6, 1979), and San Francisco, California (September 10–11, 1979). A substantial amount of information, data, and views concerning the second hearing issue was generated both in testimony presented at the hearings and in post-hearing comments which were received and placed in the record.

The Administrative Law Judge presiding at the hearings allowed until October 12, 1979, for the submission of post-hearing comments and until October 31, 1979, for filing arguments and briefs relating to the hearing issues. The Administrative Law Judge certified the record of the hearings to the Assistant Secretary of Labor for Occupational Safety and Health on November 16, 1979.

II. Background

(1) *Purpose and philosophy.*

The basic objective of OSHA's involvement in fire protection is to prevent personal injury and loss of life due to unwanted fire in the workplace. The effects of fire in the workplace can be measured in pain, suffering, and death. An understanding of the control of fire has been aided by the development of fire protection technology. The application of this technology in the workplace will enhance the protection of employees.

Industrial fires over the years have caused many injuries and deaths. Notable among the innumerable workplace related fires is the March 25, 1911, Triangle Shirtwaist Co. fire which involved three floors of the Asch Building in New York City. In that fire, within 30 minutes, about 150 people burned to death or died jumping to sidewalks below. At that time, New York City had no laws requiring fire drills, fire escapes, or sprinklers in factories. The fire and loss of life precipitated a nation-wide discussion of the question of adequate methods of egress from buildings.

The following year, on January 9, 1912, the Equitable Building fire in New York City resulting in the loss of six lives also showed that the problem of fire in the workplace needed serious examination.

In the latter part of the 1960's and early 1970's, the proliferation of high-rise buildings added to the complexities of protecting employees and fighting fires in the workplace. Fires occurred at an alarming frequency, sometimes trapping people, with consequent loss of life. For example, in Chicago, a fire broke out in the 110 story Sears Tower while under construction, trapping and killing four workmen. The problems associated with fires in tall buildings, increase the importance of early fire detection and adequate exits with safe routes of egress.

The fire problem in the United States is still a matter of major concern aggravated by the manufacturing, shipment and storage of new materials produced in our rapidly changing technological society, and by a failure to apply basic principles of fire safety. The safety of employees requires an end to conditions which present unnecessary and avoidable possibilities of destructive fire. Compared with the industrial buildings of the early twentieth century, the modern industrial complex places a larger number of employees in an increasingly hazardous environment.

A significant risk of injury and death from fire to employees and to employees who fight fires is supported by data in the record concerning fires occurring in workplaces. For example, a report by the U.S. Fire Administration (Ex. 19) shows that in 1977 an estimated 140,800–165,000 fires occurred in workplaces in the United States. These fires resulted in about 2,220 injuries and 124 deaths among the work-force. Nine out of ten injuries were burns and/or asphyxia. More than one half of the victims were injured in the course of fire fighting in the workplace. The fires also resulted in 1.3 to 2.0 billion dollars in direct property loss. These figures represent only those fires which were actually reported to fire departments.

In July 1976 the National Association of Fire Equipment Distributors (NAFED) conducted a fire extinguisher use survey (Ex. 8: 260) of industrial workplaces. The study showed that 94.2 percent of workplace fires were extinguished by employees without notification of or assistance from a public fire department.

In 1978 NAFED conducted a more comprehensive study of fire extinguisher effectiveness which confirmed the results of the first study. Data from these incidents were not included in national data reporting systems.

Another study covered fires occurring at Bell Systems facilities during 1971 through 1977 (Ex. 9). This study estimates that 80 percent of their fires were either not reported to a fire department or were reported to a fire department but the fire department provided no assistance.

The NAFED and Bell studies confirm that there are many fires occurring in workplaces which are not reflected in the U.S. Fire Administration report and other national data reporting systems. It is reasonable to assume that since the U.S. Fire Administration's estimate of total workplace fires is less than those actually occurring, the number of injuries caused by workplace fires indicated in the Fire Administration data is probably also an underestimation.

The U.S. Fire Administration report also does not include data with respect to chronic health effects to employees resulting from fire fighting activity. However, other studies in the record suggest an increased incidence of respiratory and cardiovascular disease among employees in fire fighting activities (Ex. 8: 248; 249; 250; 259). These studies are based on the experiences of municipal fire fighters. Although the frequency of fire fighting may differ, employees who fight fires in industry are exposed to the same hazards as municipal fire fighters. OSHA believes that the long-term effects associated with fire fighting in the workplace present a definite hazard to employees. When these chronic effects are added to the immediate hazards of serious injury or death from fighting fires as discussed above, a significant risk of harm from fire in the workplace clearly exists.

The provisions of this final standard are directed at protecting employees from certain of the major workplace fire hazards to which they are exposed. These provisions are reasonably necessary and appropriate to reduce the significant risks which exist. The

preamble discusses in detail the relationship of the standards requirements to the reduction of some of the major hazards.

The basis for these revised standards is OSHA's recognition of the problems associated with the present fire protection standards, particularly with regard to their specificity and their orientation in some instances towards property protection and public safety instead of workplace safety. The Secretary of Labor and the Assistant Secretary of Labor for Occupational Safety and Health have expressed their commitment to a regulatory policy for the development of safety standards which focus directly on the most significant workplace hazards, and which provide employers as much flexibility as possible in meeting these requirements. The revised standards published today serve these dual objectives.

In achieving these dual objectives, OSHA has improved the basic criteria for the design, installation, testing and maintenance of portable and fixed fire protection equipment and systems for those workplaces covered by Part 1910. Subparts E, H, L and R now have requirements for fire protection equipment and systems which must be provided in accordance with Subpart L.

Subpart L will serve as the resource standard for the requirements for the fire protection equipment and systems which relate to employee safety from fire in the workplace. In the future, as OSHA revises various subparts within Part 1910, the standards in Subpart L will be referenced in the other subparts for the specific criteria necessary to assure proper design, installation, testing and maintenance of required portable and fixed fire protection equipment. The training and education of maintenance personnel, fire brigade members and other employees are also covered in Subpart L.

The standards in Subpart L relate to the rest of Part 1910 in the following manner. Subpart L covers three general areas: portable fire protection equipment, fixed fire protection systems and fire brigades. The requirements for portable fire extinguishers apply in general to all workplaces covered by Part 1910 except those that rely on the exemptions provided for in § 1910.157. However, when another subpart in Part 1910 specifically requires that portable extinguishers be provided, then the exemption in § 1910.157 is not available as the exemption would be in conflict with the specific language of another standard. For example, paragraph 1910.180(i)(5) requires the installation of a portable fire extinguisher in the cab or vicinity of a crane. It does not provide for the exemptions allowed in § 1910.157.

The fixed fire protection systems requirements in Subpart L will be invoked when they are referenced by another OSHA standard. For example, paragraph 1910.109(i)(7) prohibits the storage of more than 2,500 tons of bagged ammonium nitrate in a building or structure unless the building is equipped with an automatic sprinkler system installed in accordance with Subpart L, § 1910.159. In this example, the employer who wishes to store more than 2,500 tons of bagged ammonium nitrate in a building or structure would have to provide a sprinkler system and refer to § 1910.159 to determine how to design and install the system. OSHA's intent in using this approach is to eliminate the need for repeating all of the design and installation standards for a required system each time the system is required in the standards.

The fire brigade requirements apply when the employer decides to establish and organize a fire brigade. The requirements contain the criteria for protective equipment and training which the employer must provide employees who have been selected to serve on company fire brigades. It is OSHA's intention that § 1910.156 will not be referenced in other subparts.

The most important factors to consider in providing adequate employee safety in a fire situation are the availability of proper exit facilities to assure ready access to safe areas, and the proper education of employees as to the actions to be taken in a fire emergency.

The standards promulgated in this final rule regulate those areas of fire protection and prevention and employee protection that OSHA believes are necessary to assure safety from unwanted fire. Provisions are included in this final rule for employee emergency action plans; the application of certain fire protection systems to the storage and use of hazardous materials; the design, installation and testing of various fire protection and prevention systems and equipment, and fire brigades.

Requirements are also established in certain areas where employee protection has been inadequate or non-existent in the past. For example, personal protective equipment is required during interior structural fire fighting operations and training and education about fire protection and prevention must be provided to employees.

A considerable proportion of fire casualties occur where occupants of buildings are unaware of a fire until it is too late to safely evacuate or escape. Automatic fire detection and alarm systems are capable of providing employees with early warning of a fire situation or other emergency and thereby give them time to safely escape. When automatic detection and alarm systems are included with automatic fixed extinguishing systems such as automatic sprinkler systems, employee safety can be greatly enhanced. According to the National Fire Protection Association (NFPA) (Ex. 8: 212):

> NFPA records show that the loss of life by fire in buildings equipped with automatic sprinkler systems has been almost negligible. The few deaths that have occurred have been under unusual circumstances . . .

OSHA recognizes the outstanding record of fixed automatic fire suppression systems in preventing loss of life and believes that the use of such systems with automatic detection and alarm systems can effectively reduce personal injury and loss of life due to fire in the workplace.

There will be cases where the use of fixed fire protection equipment or systems is precluded for some reason. In these instances, the employer may find it necessary to rely upon portable fire suppression equipment in the form of portable fire extinguishers or small hose. When this becomes necessary, the employee has become involved in one of the most hazardous facets of fire in the workplace—employee fire fighting. The direct exposure of an employee to fire fighting operations puts the employee in a position of increased risk of personal injury or loss of life. In many cases this increased risk can be alleviated by providing the employee with the necessary training and personal protective equipment to reduce the hazards associated with direct exposure to the fire.

OSHA discussed the two contrasting points of view concerning fire fighting in the workplace in the notice of proposed rulemaking at 43 FR 60049.

Basically, the first point of view is that fire fighting is hazardous and that if OSHA permits employees to fight fires, it is exposing employees to a hazardous situation contrary to the purposes of the Act. Proponents of this theory believe that fire fighting is better left to the municipal or county fire fighters and that all employees should be evacuated.

The second point of view is that some fire fighting by trained employees is necessary for the welfare of the employee, the employer and the economy. The supporters of this view believe that since fire fighting is

necessary to protect life and property, it should be regulated so that the tools and equipment are maintained, installed, and used in a safe and reliable manner.

OSHA acknowledges that there is a definite life safety hazard associated with fire fighting in the workplace. However, OSHA also recognizes that there is a need for employees to fight fires in the workplace, especially where no public fire protection service is available or where available service is inadequate. OSHA also believes that employer and employee efforts to keep small unwanted fires in the workplace from spreading and becoming large fires enhances the occupational safety of all employees.

It is, therefore, one of the purposes of this revision to regulate equipment and training provided by employers, and to assure the safety and health of employees who may become involved with fighting or escaping from workplace fires. The standard is primarily directed to fixed and portable fire suppression equipment and is intended to assure the reliability of such equipment when it is needed. The portion of the standard directed to fire brigades is intended to assure that employees who must fight fires are provided with adequate personal protective equipment, training and leadership to assure their safety and health during fire fighting and rescue operations.

OSHA wishes to clarify some misconceptions concerning employer fire fighting responsibilities that arose during the comment period for the proposed revision. OSHA does not require employers to establish fire brigades or require employees to fight fires. If the employer elects to totally evacuate all employees from the workplace at the time of a fire, the employer may do so. However, if the employer elects to have some or all of the employees fight fires, then some kind of personal protective equipment or training or both will be necessary depending upon the degree of fire fighting the employees will be doing.

OSHA does not require employers to provide employees fighting incipient stage fires with the same equipment which must be provided for employees fighting interior structural fires. The extent of education or training and equipment provided by the employer is to be consistent with the employee's exposure to fire fighting hazards.

(2) *Format.*

In the December 22, 1978, Federal Register Notice of Proposed Rulemaking OSHA (43 FR 60048) two general issues were raised relating to the nature and type of safety and fire protection standards to be promulgated. These issues concerned whether the existing standards needed to be simplified or clarified, and whether specification or performance-oriented standards should be adopted. Some of the comments (Ex. 7: 43; 98; 34) suggested that the standards needed clarification and also that OSHA should use performance language to provide as much flexibility as possible in complying with the standards. Many commenters supported the use of clear, concise and simple language in the revised standards. American Cyanamid Company (Ex. 7: 43 p. 1) suggested:

> Cyanamid feels that if Subpart L is retained by OSHA the greater flexibility provided by performance standards is much more desirable than specification standards. Performance standards would enable us to provide employee protection in unique locations which specification standards could not address adequately. Further, it would allow us to use new technology as it becomes available.

The General Motors Corporation (Ex. 7: 98 p. 2) maintained:

> ... the standards should have simple and clear requirements. The inclusion of the proposed appendix material will greatly assist in clarifying the requirements. The appendix should address all provisions that have questionable application.

Sperry Flight Systems (Ex. 7: 34 p. 1) stated: "We favor regulations which provide the employer with the maximum possible flexibility."

Organization Resources Counselors, Inc. (ORC) (Ex. 7: 94 p. 4) indicated:

> This approach assures that where an innovative approach to safety is developed it can be applied, and yet the ultimate responsibility of the employer has not changed; the safety of the employee must come first.

ORC further maintained:

> Man and his environment are in constant change, and a standard aimed specifically at the solution of today's problem will very likely to inadequate for tomorrow's. The ways and means necessary to achieve a goal must of necessity change with changing technology and organization, but the goals themselves need not.

In light of the overwhelming support for the use of simple performance-oriented language, OSHA has adopted a format which contains performance-oriented standards supplemented by non-mandatory appendices for guidance in compliance. There is also a list of reference sources in the appendix which contain information and data to further supplement the performance standard. OSHA believes that this new approach will provide employers with the necessary flexibility to meet the standard in different workplace situations and yet will provide other employers who want them with specific guidelines in the appendices for compliance with the standard.

The new format which OSHA proposed received considerable praise from interested parties. The overall support for performance-oriented standards followed by a non-mandatory appendix of compliance guidelines has led OSHA to use this format for Subpart L, and suggests that the same approach should be used in other standards to be developed in the future.

In addition to the two appendices to Subpart L contained in the proposal, OSHA is adding three additional appendices. One of them contains a cross-reference table of OSHA standards and applicable NFPA standards, in response to comments received from NFPA (Ex. 7: 161). This material was incorporated in Appendix B of the proposal. This new appendix will be entitled "Appendix B—Subpart L, National Consensus Standards." It is important to understand OSHA's intent in adopting this new appendix. Compliance with an applicable NFPA standard will be considered to be one means of compliance with the performance criteria in the OSHA standard. For example, if an employer wishes to follow the standards established in NFPA 10, Portable Fire Extinguishers, then OSHA would consider the employer to be in compliance with § 1910.157 which regulates portable fire extinguishers. However, not adhering to the NFPA standard does not necessarily constitute non-compliance with the OSHA standard.

Certainly other alternative methods of compliance may be available. In construing the meaning of the performance language in the standards in circumstances where the employer chooses not to comply with the specific provisions of the guidelines, OSHA will look at the specific guidelines among other things to determine whether the employer has complied with the standards' performance requirements.

The second new appendix, Appendix D, contains information concerning the availability of publications incorporated by reference into the standard.

The third new appendix, Appendix E, contains test methods for determining if protective clothing affords the required level of protection.

The appendices do not create any additional obligations or detract from any obligations otherwise contained in the final standard. They are intended to provide useful, explanatory material and information to employers and employees

to aid in understanding and complying with the standard. In view of the nature of the appendices, changes can subsequently be made to the appendices without rulemaking.

(3) *Metric Conversion Policy.*

English measurement values given in this standard are followed by an equivalent International System (SI) metric measurement value, usually in parentheses. The first stated value is the requirement; the second value may only be an approximation. The SI units as employed are in accordance with the American National Standard for Metric Practice, ANSI/ASTM E380.

It is OSHA's policy to use this method, known as a "soft conversion", to facilitate metrication activities under guidelines published by the Federal Interagency Committee on Metric Policy. These guidelines were published in the Federal Register at 45 FR 1840 on January 8, 1980. OSHA's metrication policy was established through a memorandum to the Assistant Secretary of Labor for Policy, Evaluation and Research from the Assistant Secretary of Labor for Occupational Safety and Health dated January 19, 1977.

(4) *Secretary's Statement under Section 6(b)(8).*

Section 6(b)(8) (84 Stat. 1596) of the Occupational Safety and Health Act of 1970 mandates:

> Whenever a rule promulgated by the Secretary differs substantially from an existing national consensus standard, the Secretary shall, at the same time, publish in the Federal Register a statement of the reasons why the rule as adopted will better effectuate the purposes of this Act than the national consensus standard.

The final requirements promulgated by this notice differ from existing national consensus standards in several areas. The differences are based on the agency's efforts to eliminate standards not specifically directed to employee safety and to develop performance-oriented standards rather than the specification type of standard used in some national consensus standards. Several national consensus standards that were the original basis of Subpart L were written to apply to public safety and property protection as well as to employee safety.

OSHA believes that these final standards will better effectuate the purposes of the Act because performance standards provide greater flexibility for compliance and set goals that employers and employees can achieve through various alternative methods. The use of alternative methods for compliance will encourage technological development and improvement in safety engineering techniques and thereby improve working conditions for employees. Further, elimination of requirements specifically directed to property protection and public safety will permit compliance efforts to be concentrated toward those hazards which directly affect employee safety.

(5) *Delayed Effective Dates.*

The proposed delayed effective dates in certain standards were based on a projected date of publication for this final rule. The proposed delays were included to permit employers time to purchase equipment needed to comply with the final rule or to "grandfather" certain fire protection systems designed or installed before the publication of the final rule.

Some of the effective dates contained in the proposal have been changed in order to give sufficient time and notice to employers from the promulgation of this final standard to come into compliance with its requirements. The effective dates for certain final paragraphs are shown below:

Final paragraph	Proposed date	Effective date
1910.156(e)(1)(i)	1/1/80	7/1/81
1910.156(f)(2)(i)	1/1/80	7/1/81
1910.158(c)(3)(ii)	1/1/80	1/1/81
1910.158(c)(3)(iii)	1/1/80	1/1/81
1910.158(e)(1)(ii)	1/1/80	1/1/81
1910.159(c)(3)	1/1/80	1/1/81
1910.164(c)(3)	1/1/80	1/1/81
1910.165(d)(4)	1/1/80	1/1/81

All other dates for compliance will remain as proposed because OSHA believes that sufficient time and notice for compliance is available to employers.

III. SUMMARY AND EXPLANATION OF FINAL RULE

This section includes an analysis of the record evidence and the policy considerations underlying the decisions as to the various provisions of the standard.

OSHA has made various changes to the proposed language in the final standard. Rather than provide a detailed discussion for each paragraph, OSHA has decided to provide a general discussion of certain changes at this point. This approach will make the detailed explanation of changes shorter and easier to read.

First, in many of the proposed revisions to Subpart L, OSHA used the opening language, "The employer shall * * *", to emphasize the employer's ultimate responsibility for compliance with the standards. Some commenters (Ex. 7: 40; 50), however, interpreted the proposed language to preclude the employer from allowing outside contractors or other persons to perform testing or other requirements under the standard. This was not OSHA's intent. The proposed language was used only to emphasize that the employer has the ultimate responsibility for safe working conditions.

However, in response to comments, OSHA has decided to use the language, "The employer shall assure that * * *", in place of "The employer shall * * *" where necessary to clarify OSHA's intent that while the employer has the ultimate responsibility, persons other than the employer may perform required duties.

Second, for some proposed revisions OSHA received no substantive comments suggesting a change to the proposed language. In most such cases, OSHA has decided to adopt the proposed language as the final standard. Throughout the following discussion OSHA has identified the specific paragraphs receiving no substantive comment by stating only that the proposed language is adopted as the final standard, without noting the lack of substantive comment.

Third, some proposed requirements have been deleted from the final standard because of the overwhelming arguments for deletion in the comments. The deletions have made it necessary to renumber many of the propose requirements as they appear in the final standard. OSHA has provided a table at the beginning of the discussion of changes for each individual section to show the final numbering. The individual requirements are identified in the discussion by the paragraph numbers used in the proposal.

Fourth, OSHA has cited the Subpart L record by identifying exhibits with parentheses. Comment numbers follow the exhibit in which they are contained. If more than one comment within an exhibit is cited, the comment numbers are separated by semicolons. For example, (Ex. 7: 4; 5; 6) means exhibit 7, comment numbers 4, 5, and 6. The page number of a comment which has been cited is abbreviated by a "p." For example (Ex. 7: 9 p.5) means exhibit 7, comment number 9, page 5. OSHA has cited the transcript of the hearings by page number. For example, (Tr. 10, 11, 12) means transcript pages 10, 11, and 12.

Fifth, editorial and grammatical corrections are made throughout the final standard which do not alter the specific intent or purpose of the proposed requirements. In most instances, these minor changes are not discussed in the preamble. The

preamble primarily focuses on substantive issues and revisions.

Section 1910.35 Definitions

OSHA is adding two definitions to § 1910.35, to define new terms used in the final § 1910.38.

Emergency action plan: Paragraph (i). In paragraph (i), OSHA proposed to define "emergency action plan" as a plan which describes the workplace life safety hazards and the actions employees must take in such emergency. OSHA received several comments (Ex. 7: 38; 64; 74; 94; 123; 168) directed to the language used in the proposal. One commenter (Ex. 7: 94) suggested that OSHA include the phrase "or parts thereof" after "workplace" because some large plant facilities have developed separate emergency action plans for the various parts of complex workplaces. OSHA agrees with the commenter and recognizes the problems associated with maintaining a single elaborate plan for large complex facilities. Therefore, OSHA has added the phrase, "or parts thereof," to this definition.

Another commenter (Ex. 7: 168) suggested that the last sentence of paragraph (i) be deleted because it added nothing to the definition. OSHA proposed the last sentence to give examples of actions which may be included in the emergency action plan. After considering the commenter's remarks, OSHA had decided to delete the sentence.

OSHA has also deleted the phrase, "the employee life safety hazards are and what actions," and has replaced it with the word "procedures" because the proposed language would have required too much detail in the plan by requiring the listing of potential hazards.

OSHA has made other changes to the proposed language of the first sentence to clarify the definition of an emergency action plan. OSHA believes that the definition should more generally describe what is covered in the plan.

Emergency escape: Paragraph (j). In paragraph (j), OSHA proposed to define "emergency escape" as the route that employees would follow to evacuate a workplace. In the proposed language OSHA recognized windows as an acceptable means of emergency escape. One commenter (Ex. 7: 123) was critical of OSHA on this point. The FPE Group stated (Ex. 7: 123 p.4):

> Suggesting the use of 'external wall opening such as a window' does not appear to be good fire life safety practice. The use of windows may require a degree of agility not appropriate to fire emergencies. The criteria for ease and method for opening windows and the elevation of the window above grade is not addressed. Windows are not recognized exits under building codes unless leading to a fire escape ladder.

OSHA is aware of the fact that windows are not traditionally considered acceptable for emergency egress; however, OSHA believes that if a window is available and it offers the only tenable means of egress from a fire area, the employee should use it. In light of the comment, OSHA has decided to use the phrase "alternative emergency egress" instead of the proposed language which refers specifically to windows. This change will allow the use of windows in emergencies, and indicates the flexibility in selection of alternative methods of egress. OSHA believes that employers and employees are capable of planning routes of emergency escape which would be acceptable.

Another commenter (Ex. 7: 168) suggested that OSHA use the term "emergency escape route" or "emergency evacuation route" rather than the proposed term "emergency escape." The commenter suggested that the term "emergency escape" implies an action to be taken by employees and not a route to be followed. OSHA agrees with the commenter and has decided to change the term to "emergency escape route," to clarify OSHA's intent that the proposed language define a route to be taken.

Section 1910.37 Means of egress, general.

Fire alarm signaling systems: Paragraph (n). In this paragraph OSHA proposed to delete the existing testing and maintenance requirements for alarm and fire protection systems and substitute a cross-reference to proposed § 1910.164a (renumbered § 1910.165 in the final standard).

Several commenters (Ex. 7: 49; 60; 66; 173) suggested other editorial and grammatical changes or questioned the scope of the paragraph. OSHA will consider these suggestions when Subpart E of Part 1910 is totally revised.

Section 1910.38 Employee emergency plans and fire prevention plans.

OSHA has found it necessary to change the section heading for § 1910.38 from "Employee emergency plans" to "Employee emergency plans and fire prevention plans." OSHA has determined that a fire prevention plan is not really an employee emergency plan but a hazard prevention plan. Therefore, OSHA is including fire prevention plan as part of the section's heading to clarify that the section contains requirements addressing a plan other than an employee emergency plan.

Emergency action plan: Paragraph (a). Paragraph (a) establishes the requirements for emergency action plans that have been developed by employers to assure employee safety during fires or other emergencies. The purpose of an emergency action plan is to facilitate and organize employer and employee actions during workplace emergencies.

In paragraph (a)(1) OSHA defines the scope and application of the section. The section applies to all emergency action plans which may be required by a particular OSHA standard. However, the section does not, by itself, require the employer to establish an emergency action plan. The section contains only the criteria to be followed in establishing emergency plans which are or which will be required by other specific OSHA standards. For example, an employer can obtain certain exemptions from the requirements of § 1910.157, Portable Fire Extinguishers, if an emergency action plan is established in accordance with the requirements of this section. Further, in § 1910.160 (c)(1), the employer is required to provide an emergency action plan in accordance with § 1910.38 for areas where total flooding fire extinguishing systems use agent concentrations exceeding maximum safe levels.

One commenter (Ex. 7: 34) suggested that a listing of the provisions where emergency action plans are required should be included. OSHA does not believe that such a list of specific requirements is appropriate. The terminology, "required by a particular OSHA standard" as found in this section is also used throughout Subpart L. OSHA's intention is to use internal cross-references within Part 1910 wherever such references are necessary.

Copperweld Steel Company stated (Ex. 7: 64 p.4):

> The idea that plans consist of and address *all* designated actions is not [at] all realistic. Recognizing the sizes of business establishments and the difference in types of business and the creation of this requirement for all business to have an emergency action plan is an inappropriate plan and would be difficult to enforce.

OSHA agrees that requiring the plan, as proposed, to "consist of and address *all* designated actions" may not be practical. In order to make the requirement more practical, OSHA revised the proposed language by deleting the phrase "all actions" and by replacing the deleted language with the words "those designated actions" because it is necessary that the plan adequately describe the actions each employee and the employer must take in an emergency. While it is not necessary to cover all actions in a single plan,

OSHA believes that each employee should be able in advance of any emergency to read the plan to determine what is expected to be accomplished at the time of an emergency. OSHA believes the changes made to the proposed language will permit employers to develop less voluminous plans. This change will also reduce the burden on small business by eliminating the need for extensive plans where simple, less complex plans can adequately provide for employee safety.

OSHA's changes to the proposed language were further supported by other commenters (Ex. 7: 66; 94; 98; 123) who expressed similar concerns about the broadness of the coverage for emergency action plans.

Paragraph (a)(2) contains the minimum specific elements to be covered in emergency action plans. OSHA proposed several specific elements addressing procedures, assignments, and actions that would have to be included in a plan. Several commenters (Ex. 7: 40; 54; 73; 98; 168) identified problems associated with requiring specific elements to be included in workplace plans where such elements may be unnecessary. The Sun Oil Company indicated (Ex. 7: 40 p. 4);

> The scope and application of the emergency action plan should be stated but the specific elements of the plan should be omitted from the standard and incorporated as guidelines in the appendix.

The Motor Vehicle Manufacturers' Association (MVMA) suggested (Ex. 7: 168 p. II-2) that OSHA limit the list of elements to the proposed elements (i), (iii), (v), and (vii).

OSHA believes that the minimal list of elements is necessary because they are fundamental to effective emergency action plans. Therefore, OSHA has retained the list of elements, with some amendments to the language, in the final § 1910.38(a)(2). As noted below, the amendments reflect suggested changes which will clarify the requirement or provide greater flexibility for compliance.

In paragraph (a)(2)(i) OSHA proposed that emergency escape procedures and assignments must be included in the plan. These would include emergency duties of employees related to safe evacuation. OSHA has decided to add the phrase "emergency escape route assignments" to the proposed language. This will assure that employees can find what emergency route assignment they have and can become familiar with the path to follow.

Paragraph (a)(2)(ii) provides that the plan must contain those procedures to be followed by employees who must remain inside the workplace, after initial evacuation, to operate or shut down critical plant operations.

In paragraph (a)(2)(iii) OSHA proposed that the plan include those actions necessary to account for all employees after emergency evacuation has been completed. One commenter, J. I. Case Company, remarked (Ex. 7: 74 p. 4):

> Absenteeism, transfers, shift changes, employees on errands, etc. render this requirement impractical and even impossible. We know of no practical way we could account for all of our employees after evacuation by holding a muster.

OSHA believes that it is possible to determine if all employees working on a particular day when an emergency occurs have made it to safety. Front line supervisors should be aware of the locations of those employees or fellow employees. Further, accounting for employees will aid the plant fire brigade or the local responding fire departments in determining whether rescue efforts are necessary. For these reasons, OSHA has decided to retain this requirement in the final list of elements.

In paragraph (a)(2)(iv) OSHA proposed that the rescue and medical first aid duties of employees be included in the plan. OSHA is deleting the reference to "first aid". OSHA believes this change will enhance employee safety by providing that medical duties in addition to first aid will be covered in the plan.

In paragraph (a)(2)(v) OSHA proposed that the preferred means of reporting fire emergencies and the acceptable back-up methods for notifying appropriate persons be included in the emergency action plan. OSHA has changed the proposed language by deleting the language relating to alternative back-up methods. OSHA believes the requirement for alternative back-up methods need not be stated under this requirement because it is adequately covered by § 1910.165 which is referenced in § 1910.38(a)(3) which regulates alarm systems.

In paragraph (a)(2)(vi) OSHA proposed that the plan include the emergency duties of all employees when the alarm sounds. OSHA has deleted this paragraph because the requirement to include employer and employee actions or duties in the plan is adequately covered by paragraph (a)(2)(i) of the final § 1910.38.

In paragraph (a)(2)(vii) OSHA proposed that the names of persons to be contacted regarding emergency procedures be listed in the emergency plan. Both the MVMA (Ex. 7: 168) and the U.S. Department of Defense (Ex. 7: 143) suggested that OSHA permit the listing of a job title for persons to be contacted in an emergency in paragraph (a)(2)(vii). OSHA agrees with the comments and believes that the listing of regular job titles as an alternative is appropriate, particularly in places of employment where employee turnover may be a common occurrence.

In paragraph (a)(3) OSHA proposed that the employer establish an alarm system in accordance with § 1910.164a (now designated § 1910.165).

Two commenters (Ex. 7: 98; 168) suggested that OSHA differentiate between the fire brigade alarm and the employee evacuation alarm. General Motors Corporation stated (Ex. 7: 98 p. 9) "There should be a definite delineation between a fire brigade alerting system and the employee evacuation alarm."

In a related issue, OSHA raised a question in the notice of proposed rulemaking (Issue 19, 43 FR 60051) concerning the feasibility of adopting a universal fire alarm signal.

Most of the commenters (cf. Ex. 7: 33; 66; 97; 160) who addressed the issue of a universal standardized fire alarm signal stated that it is not feasible to require such an alarm at this time. Problems identified by the commenters included the economic burden of retro-fitting existing systems and the selection of a suitable alarm signal pattern.

OSHA believes that, while a universal alarm signal may not be necessary or appropriate at this time, a distinctive alarm capable of identification as a signal to evacuate is necessary. Where alarm signals have similar sounds and are used for purposes other than to signal evacuation they can be confused with the fire alarm signal and either be ignored or cause overreaction. Therefore, OSHA is revising the proposed language to include a new requirement. If the employee alarm system is used to summon the fire brigade, or for other emergency messages, then it must have a distinctive signal for each purpose. The requirement for distinctive signals does not mean different signaling systems for each purpose. OSHA will recognize a single system with coded signals or voice communication as satisfying this requirement.

Paragraph (a)(4) requires that employers establish the types of evacuation to be used in emergencies. OSHA had proposed that the employer state in the emergency action plan whether immediate and total evacuation or delayed and partial evacuation is planned. Several comments (Ex. 7: 11; 49; 60; 74; 87; 121) suggested that the proposed language was too specific and

limited evacuation to one of two plans. M&M Protection Consultants stated (Ex. 7: 11 p. 3):

The wording in this paragraph is poor, since it limits the alternatives for evacuation to two: Immediate and total or delayed and partial. There may also be a need for a delayed total evacuation or an immediate partial evacuation. This paragraph should be reworded.

OSHA has decided to delete the phrases "immediate and total evacuation or delayed and partial evacuation" from the proposed language because they are too specific and limit the alternative methods of evacuation available to employees and employers. The purpose of this requirement is to assure advance planning for evacuations in fires and other emergencies.

Paragraph (a)(5)(i) contains a training requirement for persons who will be assisting in emergency evacuations. OSHA proposed that a sufficient number of employees be trained to assist in evacuations. One commenter (Ex. 7: 123) questioned the meaning of "sufficient number of employees." OSHA believes that the employer must determine the number based upon the employer's knowledge of the workplace. In some cases it may be one employee and in others it may involve a team of fire wardens. Therefore, the standard provides flexibility for this determination through use of performance language. OSHA is providing guidance on what constitutes a "sufficient number" in the appendix.

Paragraph (a)(5)(ii) contains the requirements for reviewing the emergency action plan with all employees covered by the plan, including those assisting in emergency evacuations. OSHA proposed that employee responsibilities under the plan be reviewed with them when the plan is developed and whenever it changes. The State of Michigan (Ex. 7: 60) suggested that OSHA revise the proposed wording so that employers need review the plan with employees only when the employee's specific duties change rather than when any part of the plan changes. OSHA agrees that if a review was required every time the plan is changed, in any respect, the review process would be unnecessarily burdensome to employers and would not help employees whose duties did not change. Therefore, OSHA is setting three times when the plan must be reviewed with employees: initially when the plan is developed; before a change in the employee's responsibilities under the plan; and whenever the plan is changed such that the employee's duties change.

Another commenter (Ex. 7: 60) suggested that OSHA designate in the final rule when the training should be provided. OSHA has revised the proposed language in paragraph (a)(5)(i) to require the employer to train employees before they are expected to perform any duties under the plan.

In paragraph (a)(5)(iii) OSHA proposed that the employer give a copy of the emergency action plan to each employee upon initial employment and that the plan must be posted in the workplace for review. OSHA also proposed that employers with 10 or fewer employees may orally convey the plan to employees instead of posting it. Several commenters (cf. Ex. 7: 34; 38; 96; 113; 150) remarked that the proposed language requiring the plan to be distributed to every employee and then to be posted would be burdensome and unnecessary, and would serve no purpose for improving employee safety.

It was not OSHA's intent to require the posting and distribution of the entire corporate plan. OSHA has decided, in light of the comments, to change the proposed language to require that an employer shall review with each employee upon initial assignment those parts of the plan that the employee must know in order to be protected in the event of an emergency. OSHA has also changed the proposed language to permit the plan to be available in the workplace rather than require that it be posted. Employers with 10 or fewer employees may orally communicate the plan to employees. OSHA believes the changes to the final requirement will reduce the burden of compliance and improve the value of the training by eliminating the need to provide employees with emergency information that is not relevant to them.

In paragraph (a)(5)(iv) OSHA proposed that employers review the emergency action plan with employees when that employee's job duties change. As noted above the language of paragraph (a)(5)(iii) of the final standard incorporates such a review requirement. Therefore, proposed paragraph (a)(5)(iv) has been deleted from the final standard.

Fire prevention plan: Paragraph (b). Paragraph (b) of this section contains the requirement pertaining to fire prevention plans. The purpose of this paragraph is to provide employers and employees with the criteria for establishing and implementing fire prevention plans in workplaces where such plans are required by other OSHA standards. Fire prevention plans also encourage pre-fire planning. This paragraph does not require the employer to establish a plan; it only contains the criteria to follow when such a plan is to be established.

The requirement for the establishment of a plan is found in other OSHA standards. For example OSHA provides an exemption from the fire extinguisher standard in § 1910.157(b)(2) for those employers who establish an emergency action plan and a fire prevention plan in accordance with § 1910.38.

Paragraph (b)(1) states that the requirements in paragraph (b) apply to all fire prevention plans required by a particular OSHA standard. OSHA is adopting the proposed language as the final standard.

In paragraph (b)(2) OSHA establishes the elements to be covered, at a minimum, in a fire prevention plan. OSHA proposed several specific elements, and several commenters (Ex. 7: 49; 87; 121; 160) suggested changes to or deletions from the list.

In paragraph (b)(2)(i) OSHA proposed that the plan contain a list of the major potential fire hazards and ignition sources, and the types of fire protection equipment or systems that can be used to control fires in the workplace.

United States Steel Corporation (Ex. 7: 66 p. 2) suggested deleting the paragraph because: "It is impossible to make a list of *all* the major potential fire hazards * * *." DuPont maintained (Ex. 7: 93 p. 2): "(This paragraph) would require listing potential ignition sources. This would be time consuming and pointless." The MVMA stated (Ex. 7: 168 p. II-4): "The safety value to an employee of such an all-encompassing list as would be required by the present proposal is extremely questionable."

After reviewing the comments OSHA agrees that an all-encompassing list of all potential fire hazards could be unduly voluminous and unnecessary. OSHA believes that such a detailed list of all fire hazards is not necessary nor is it required by the language of the standard which refers to "major" hazards. OSHA believes that a list of significant hazards is essential for both effective pre-fire planning and for orientation of new employees and employees who have changed job assignments. OSHA has also included examples of potential ignition sources.

In paragraph (b)(2)(ii) OSHA proposed that the method of contacting the plant fire brigade or public fire department be one of the elements of a fire prevention plan. OSHA has decided to delete paragraph (b)(2)(ii) because the requirement is adequately covered by revised paragraphs (a)(2)(v) and (a)(3).

Paragraph (b)(2)(iii) of the proposal required the listing of personnel designated to maintain equipment and systems used to prevent ignitions or

fires. One commenter (Ex. 7: 168) identified the problem of listing specific names particularly in plants with high employee turnover rates. OSHA has decided to amend the proposed language by permitting regular job titles to be listed as an alternative to employee names. OSHA believes this change will provide further flexibility in identifying the persons responsible for maintaining equipment and systems and will eliminate the need to update plans when employees change job positions.

Paragraph (b)(2)(iv) of the proposal required employers to list the personnel designated to control fuel source hazards. OSHA has amended this paragraph by permitting employers to list either regular job titles or employee names. As stated above, this change provides additional flexibility in identifying employees and it eliminates the burden of updating lists every time a designated person changes job positions.

Paragraph (b)(3) contains a housekeeping requirement that must be included in the written fire prevention plan. OSHA proposed that all workplaces be kept free of accumulations of hazardous waste materials and residues. Several commenters (Ex. 7: 11; 50; 160) questioned the need for housekeeping requirements in the fire protection standard. M&M Protection Consultants stated (Ex. 7: 11 p. 3):

> We do not understand how this paragraph fits in with the fire prevention plan and/or the emergency action plan * * * (and) It should be part of the general standard.

Other commenters (Ex. 7: 74; 94; 98; 168) believed there is a need for such a requirement in this standard, but thought that the proposed language was too restrictive. ORC recommended (Ex. 7: 94 p.A-4) the insertion of the word "relatively" before the word "free" in the paragraph.

The J. I. Case Company said (Ex. 7: 74):

> This requirement would preclude the storing of shredded paper in an office shredder or paper in a wastebasket until emptied by the janitor.

General Motors suggested (Ex. 7: 98) that the trash be removed on a scheduled basis. "A better guideline would be to use the criteria of a one-day or one-shift accumulation * * *"

OSHA recognizes that it is impractical to keep workplaces *totally free* of flammable and combustible waste materials *at all times*. It was not OSHA's intent to require that all workplaces be kept "broom-swept and clean" at all times. Therefore, OSHA has revised proposed paragraph (b)(3) to require the employer to "control" accumulations of flammable and combustible waste materials so that they do not contribute to a fire emergency. As a guideline for "control," OSHA suggests in the appendix that the accumulations be removed from the workplace at least on a daily (24-hour) basis. The employer must know when wastes have accumulated to the point where they may constitute a fire hazard. Before this condition arises, the accumulation must be removed.

Paragraph (b)(4) contains the training requirements for employees covered by the plan. Several commenters (Ex. 7: 11; 49; 51; 66; 160) suggested changes or deletions to the proposed language.

In paragraph (b)(4)(i) OSHA proposed that the employer train employees in recognizing potential fire hazards involving workplace materials and processes. After reviewing the comments, OSHA has decided that the first sentence of the proposed language, which would have required the employer to train employees how to recognize fire hazards, should be deleted. The second proposed sentence, which states that employees shall be apprised of the fire hazards of the materials and processes to which they are exposed, adequately covers employee training. Therefore, OSHA is adopting the second sentence alone as paragraph (b)(4)(i) of the final standard to assure that employees are provided sufficient training concerning workplace fire hazards.

In paragraph (b)(4)(ii) OSHA proposed that the employer review the plan with employees who have duties under the plan. OSHA has decided to consolidate this requirement with that of paragraph (b)(4)(iii), because both paragraphs contain requirements which address employee review and awareness of the plan.

Several commenters (Ex. 7: 11; 51; 66; 160) argued that the proposed posting and distribution requirements were unnecessarily burdensome. This was particularly true for the proposed posting requirement for the entire plan in paragraph (b)(4)(iii). The commenters (Ex. 7: 11; 51; 66; 160) further suggested that requiring the employer to give each person a copy of the entire plan would serve no purpose in furthering employee safety but would increase the cost. OSHA's purpose in proposing this requirement was to assure that employees had access to the plan, or to that part of the plan, which affected their work areas and their safety. It was not OSHA's intent to require that every employee be given copies of an entire corporate plan.

In light of the comments, paragraph (b)(4)(ii) of the final standard requires that employers review only that part of the plan applicable to each employee. The written plan is to be maintained at the workplace where employees can review it when necessary. OSHA is also deleting the posting and distribution requirements because they are unnecessary as long as employees are trained about the plan and given access to the plan's contents.

Paragraph (b)(5) contains the maintenance requirements for equipment and systems installed to prevent ignitions and requires that they be included in the written fire prevention plan. The purpose of this requirement is to assure the reliability of such equipment. Some comments (Ex. 7: 49; 73) suggested that there was some confusion as to what equipment OSHA was regulating and as to whether this paragraph addresses maintenance of fire protection equipment. OSHA emphasizes that paragraph (b)(5) does not address the maintenance of fire suppression systems and equipment. The maintenance of fire protection systems and equipment is covered in the individual sections for such equipment in Subpart L. In paragraph (b)(5), OSHA is regulating those systems or equipment installed on heat producing equipment to prevent accidental ignition of a combustible material. For example, a temperature limit switch may be installed in a deepfat fryer to shut off the heat source when the liquid has reached a temperature near its flash point. It is the purpose of this paragraph to require that temperature limit switches and other such equipment are kept in operating condition.

Subpart H Hazardous Materials

OSHA is changing the language in several sections in Subpart H of 29 CFR Part 1910. The changes are primarily editorial in nature and do not change the technical substance of the specific requirements. The changes eliminate the incorporation by reference of outdated national consensus standards and reference the appropriate sections of Subpart L in their place. The following table lists these changes in cross-referencing:

Subpart H.—*Cross-Reference Table*

1910 Standard	Old reference	New reference
.107(i)(1)	NFPA 13-1969	1910.159
.108(g)(1)	NFPA 10-1970	1910.157
.108(g)(2)	NFPA 15-1969	1910.163
.108(g)(3)	NFPA 11-1970	1910.163
.108(g)(4)	NFPA 12-1968	1910.162
.108(g)(5)	NFPA 17-1969	1910.161
.109(i)(7)(i)	NFPA 13-1969	1910.159
.109(i)(7)(ii)	NFPA 10-1970	1910.157

Subpart H.—*Cross-Reference Table*—Continued

1910 Standard	Old reference	New reference
.109(i)(7)(ii)	NFPA 14-1970	1910.158

OSHA believes the changes to the Subpart H standards will make it easier for employers to comply with the OSHA standards by eliminating the need to refer to an outside standard which was incorporated by reference.

For example, in § 1910.107(f)(1) OSHA required sprinkler systems to comply with NFPA No. 13-1969. This was the NFPA standard for automatic sprinkler systems originally incorporated by reference by OSHA in its standards. Rather than making the employer obtain a copy of NFPA 13-1969 to know what the OSHA standard requires, OSHA has decided to eliminate this incorporation by reference in Subpart H and, instead, to reference the appropriate sections on automatic sprinkler systems in Subpart L. This change will simplify compliance with the standards. Since compliance with appropriate NFPA standards is recognized by OSHA as an acceptable method of complying with the provisions of Subpart L, there should be no reduction in employee safety as a result of this revision.

There were no substantive comments which addressed OSHA's approach to eliminating outdated consensus standards. Some commenters suggested technical changes to the Subpart H standards. However, such changes are outside the scope of this rulemaking, and will be considered in a future rulemaking proceeding on Subpart H.

Subpart L Fire Protection

OSHA is making extensive changes to the requirements of its fire protection standards. OSHA has added a new § 1910.155 containing the scope, application and definitions applicable to the subpart. There has also been a renumbering of the other sections to permit the addition of the new section on fire brigades.

OSHA has slightly changed the order of the standards as published in the proposal. This change is necessary since the proposed rule contained a section identified as § 1910.164a, which has been eliminated.

A list of the renumbered sections is as follows:

§ 1910.155—Scope, application and definitions.
§ 1910.156—Fire brigades.
§ 1910.157—Portable fire extinguishers.
§ 1910.158—Standpipe and hose systems.
§ 1910.159—Automatic sprinkler systems.
§ 1910.160—Fixed extinguishing systems, general.
§ 1910.161—Fixed extinguishing systems, dry chemical.
§ 1910.162—Fixed extinguishing systems, gaseous.
§ 1910.163—Fixed extinguishing systems, water spray and foam.
§ 1910.164—Fire detection systems.
§ 1910.165—Employee alarm systems.
Appendix—Subpart E, Means of Egress.
Appendix A—Subpart L, Fire Protection.
Appendix B—Subpart L, National Consensus Standards.
Appendix C—Subpart L, References.
Appendix D—Subpart L, Availability of Publications Incorporated by Reference in Section 1910.156 Fire Brigades.
Appendix E—Subpart L, Test Methods for Protective Clothing.

Section 1910.155 Scope, application and definitions applicable to this subpart.

Scope: Paragraph (a). Paragraph (a) contains the scope statement for the subpart. All portable or fixed fire suppression systems, fire detection equipment, and fire or employee alarm systems required to be installed by this or other subparts in the OSHA standards are covered in Subpart L.

The Subpart also covers fire brigades including their personal protective equipment. Systems or equipment which may be installed to supplement what OSHA requires or which are installed solely to comply with other regulatory agency fire codes are not covered by these requirements. OSHA is not regulating such systems because it believes that adequate regulation is provided by local fire code enforcement agencies and insurance carriers.

Application: Paragraph (b). Paragraph (b) states that "general industry" is covered by the requirements of Subpart L. As proposed, the final standard exempts maritime, construction, and agriculture from coverage. It is OSHA's policy to develop vertical standards for these industries where possible.

Several commenters (Ex. 7: 87; 121; 164) suggested that over-water structures such as off-shore drilling platforms not be covered by Subpart L. OSHA standards do not apply to those working conditions in over-water structures for which the U.S. Coast Guard exercises authority to prescribe or enforce standards or regulations affecting occupational safety or health under the Outer Continental Shelf Lands Act, Pub. L. 95-372 (92 Stat. 629).

Definitions: Paragraph (c). Paragraph (c) contains the definitions of terms as they are used in the Subpart.

Because several proposed definitions have been deleted from the final standard, it is necessary to renumber the proposed paragraphs as follows:

Proposal	Final	Proposal	Final
(c)(1)	(c)(1)	(c)(23)	(c)(22)
(c)(2)	(c)(2)	(c)(24)	(c)(23)
(c)(3)	(c)(3)	(c)(25)	(c)(24)
(c)(4)	(c)(4)	(c)(26)	(c)(25)
(c)(5)	(c)(5)	(c)(27)	(c)(26)
(c)(6)	(c)(6)	(c)(28)	(c)(27)
(c)(7)	(c)(7)	(c)(29)	(c)(28)
(c)(8)	(c)(8)	(c)(30)	(c)(29)
(c)(9)	(c)(9)	(c)(31)	(c)(30)
(c)(10)	(c)(10)	(c)(32)	(c)(31)
(c)(11)	(c)(11)	(c)(33)	(c)(32)
(c)(12)	[1]	(c)(34)	(c)(33)
(c)(13)	(c)(12)	(c)(35)	[1]
(c)(14)	(c)(13)	(c)(36)	(c)(34)
(c)(15)	(c)(14)	(c)(37)	(c)(35)
(c)(16)	(c)(15)	(c)(38)	(c)(36)
(c)(17)	(c)(16)	(c)(39)	(c)(37)
(c)(18)	(c)(17)	(c)(40)	(c)(38)
(c)(19)	(c)(18)	(c)(41)	(c)(39)
(c)(20)	(c)(19)	(c)(42)	(c)(40)
(c)(21)	(c)(20)	(c)(43)	(c)(41)
(c)(22)	(c)(21)	(c)(44)	(c)(42)

[1] Deleted.

In paragraph (c)(1) OSHA defines the term "after-flame" as the time a test specimen continues to flame after the flame source has been removed.

In paragraph (c)(2) OSHA is defining "aqueous-film-forming-foam (AFFF)." OSHA is recognizing the use of this agent for the first time. (See § 1910.157.) Some commenters (Ex. 7: 10; 120) addressed the proposed language and cited examples where misinterpretations could occur. For example, National Foam (Ex. 7: 10 p. 1) suggested that OSHA clarify the final definition.

> With respect to the definition of AFFF, it does *not* form an aqueous film or a film of any significance on water soluble flammable liquids or on all hydrocarbons. Without qualification, subject paragraph is misleading.

OSHA recognizes that AFFF will form only a temporary barrier on the surface of some hydrocarbon fuel surfaces and is revising the final language to reflect this limitation.

Paragraph (c)(3) contains a definition for "approved". Previously in Subpart L, OSHA limited testing laboratory approvals to Underwriters' Laboratories, Inc. (UL) and Factory Mutual Research Corporation (FM). OSHA has expanded the definition of "approved" to recognize alternative means of approval which are consistent with Subpart S (electrical standards) of Part 1910 and acceptable to OSHA.

These alternatives include approval granted by other Federal agencies, and self-certification for certain custom-made equipment. The language of the revised definition is essentially the same as that used in the definition of "approved" found in 29 CFR Part 1910, Subpart S. This definition was selected because it provides as much flexibility as possible consistent with adequate assurance of the use of safe equipment. Several commenters (Ex. 7: 46; 49; 119;

120) supported the change in the definition because it is not as restrictive as the previous definition.

Paragraph (c)(5) defines "automatic fire detection device." OSHA proposed to define the term as any device designed to detect the presence of fire by any of various products and effects of combustion. OSHA further proposed a list of definitions for specific types of detectors.

OSHA has decided to eliminate the term "effects" and to use the more recognized phrase "products of combustion" to describe what these devices detect. "Products of combustion" such as heat, light, smoke and flame trigger the majority of detectors. OSHA has also decided to delete the list of specific types of detectors because those terms are not used in the final standard.

In paragraph (c)(6) OSHA defines "buddy-breathing device" as an accessory for self-contained breathing apparatus which permits a second person to share the same air supply.

In paragraph (c)(7) OSHA defines "carbon dioxide" to describe the physical characteristics of the gas as it is used as a fire extinguishing agent.

Paragraph (c)(8) of the proposal defined "Class A fire" as one involving ordinary combustible materials such as paper, wood, cloth, rubber and many plastics. One commenter, (Ex. 7: 65) noted that some rubber and plastic materials exhibit Class B fire properties. In light of this comment, OSHA has changed the proposed definition to indicate that Class A fires may occur in "some rubber and plastic materials" rather then in "rubber and many plastic materials."

Paragraph (c)(9) as proposed defined "Class B fire" as one that involves flammable or combustible liquids, flammable gases, greases and similar materials.

OSHA has changed the proposed definition of Class B fires to recognize, as noted above, that some rubber and plastic materials may exhibit Class B properties.

In paragraph (c)(10) OSHA defines "Class C fire" as a fire which requires an electrically non-conductive agent. This recognized definition is adopted as proposed.

Paragraph (c)(11) of the proposal defined the term "Class D fire" as one involving certain metals including those listed as examples. M&M Protection Consultants suggested that the term "certain" be deleted because "a combustible metal, if not specifically listed in the regulations, does not come under the regulations, if the word 'certain' is left in the definition." (Ex. 7: 11 p. 5). OSHA has deleted the term "certain" from the proposed language to avoid any possible misunderstanding which might limit the number of metals covered by the definition.

Proposed paragraph (c)(12) defined the term "discharge alarm." OSHA has deleted the proposed definition because it is no longer used in the final revision to Subpart L.

Paragraph (c)(13) of the proposal defined the term "dry chemical" as a compound composed of small particles of various specific chemicals. One commenter, M&M Protection Consultants stated (Ex. 7: 11 p. 5), "By (listing the agents), you exclude any dry chemicals which may be developed in the future." OSHA agrees with the commenter and has amended the final definition (paragraph (c)(12)) by inserting the phrase "such as" before the list of chemicals to make it clear that these are just examples.

Paragraph (c)(14) of the proposal (final paragraph (c)(13)) defines the term "dry powder" as a compound used to extinguish or control a Class D fire, to differentiate it from "dry chemical."

Paragraph (c)(15) of the proposal (final paragraph (c)(14)) defines "education" as the process of imparting knowledge or skill through systematic instruction.

In paragraph (c)(16) of the proposal OSHA defined "enclosed structure" as a structure with a roof or ceiling which may present similar fire hazards as buildings which have four sides. Two commenters, Gulf Oil Corporation and the American Petroleum Institute (Ex. 7: 87; 121), suggested that the definition be changed by inserting the word "combustible" before the word "roof."

OSHA does not believe the addition of the term "combustible" is appropriate in the definition because the definition addresses the hazard of accumulated heat, smoke and toxic gases rather than whether the structure itself is combustible. OSHA believes that accumulations can occur in any type of construction provided the structure is enclosed.

Mobil Oil Corporation stated (Ex. 7: 148 p.2):

> There is little similarity between an enclosed building and a structure with only a roof and *no sides*. The escape fire fighting techniques, salvage, etc. between the two is very different and should not be included under structure fire protection requirements.

OSHA does not intend the definition to apply to structures without any sides. The entire concept of the definition is directed to the hazards involved when employees are inside of enclosed structures where the dangers due to the accumulation of smoke, heat, and toxic gas are increased. OSHA agrees with the Mobil Oil comment that there is a significant difference between an enclosed structure or building and a structure with a roof but no walls. The products of combustion are not likely to be trapped inside a building with no sides. However, where employees are involved in fire fighting operations inside of enclosed structures with at least two walls, the hazards associated with containment of smoke, heat and toxic gases increase.

After considering the comments, OSHA has decided to revise the definition (final paragraph (c)(15)) to "a structure with a roof or ceiling and at least two walls which may present fire hazards, such as accumulations of smoke, toxic gases and heat, similar to those found in buildings.

In paragraph (c)(17) of the proposal, OSHA defined the term "extinguisher classification." The proposed definition defined the term as the letter classification given an extinguisher to designate the class or classes of fires on which an extinguisher is effective. Underwriter's Laboratories, Inc. (Ex. 7: 120) stated that OSHA's proposed definition is different from the one normally recognized in the fire protection and equipment industries. The fire protection and equipment industries recognize the NFPA 10 committee's format of fire extinguisher rating and classification. For example, a common extinguisher in industry would be labeled 4A:10B:C. The letters (classificaton) indicate the types of fires for which the extinguisher is effective. In the example given, the extinguisher is classified for use on Class A, B, and C fires. The numbers (rating for specific classes) indicate the extinguishing potential of the extinguisher for that class based on a standard fire test for each class. The greater the numerical rating, the greater the extinguishing potential of the extinguisher on the particular class of fire. In Subpart L, OSHA is specifically treating extinguisher classification and extinguisher rating as two different concepts. OSHA believes the two terms will aid in better understanding the numerical and letter designations used in classifying extinguishers.

The definitions for both terms (final paragraphs (c)(16) and (c)(17)) are consistent with the NFPA 10 committee's explanation of extinguisher rating, as found in paragraph 1-3.2 of NFPA 10-1978. OSHA has changed the proposed definition of "extinguisher classification" by deleting the last sentence which gives an example of fire extinguisher classifications, because it is

unnecessary to the definition, and by deleting the word "control" from the proposed definition because rating and classification tests are based on the concept of an average person extinguishing, not controlling, a fire.

Final paragraph (c)(17) defines the term "extinguisher rating" as that numerical designation given to a fire extinguisher to indicate the relative extinguishing potential of an extinguisher based on standardized tests developed by Underwriters' Laboratories, Inc.

Paragraph (c)(19) of the proposal defined the term "fire brigade" as an organized group of employees who are knowledgeable, trained and skilled in fire fighting operations. Several commenters (Ex. 7: 73; 74; 90; 160; 168) suggested that OSHA clarify the definition further because of the many terms used in industry to identify groups organized to perform fire fighting duties. OSHA is utilizing the term "fire brigade" as a general term to define any group which is expected to perform basic fire fighting. While employers may call the group by another name, OSHA will consider any group performing duties related to organized fire fighting as a "fire brigade" rather than try to list the different titles given to such groups. OSHA has changed the definition (final paragraph (c)(18)) by adding the phrase "at least basic fire fighting operations" to clarify that, even employees engaged only in incipient stage fire fighting will still be considered a fire brigade if they are organized in that manner.

In paragraph (c)(20) of the proposal (final paragraph (c)(19)) OSHA defines the term "fixed extinguishing system" as a permanently installed fire extinguishing system that either extinguishes or controls a fire at the location of the system.

Paragraph (c)(21) of the proposal (final paragraph (c)(20)) defines the term "flame resistance" as the property of a material to retard ignition and restrict the spread of flame.

In paragraph (c)(22) of the proposal OSHA defined the term "foam" as a stable aggregation of small bubbles which flow freely to form a rigid, air-excluding blanket which is used to extinguish fires. Several commenters (Ex. 7: 10; 93; 94; 120; 168) addressed the proposed definition. National Foam commented (Ex. 7: 10 p.2):

> Foam does not form a rigid air excluding blanket. In reality, and according to the National Fire Code definition, foam forms a "coherent" blanket. It also prevents the reignition of flammable vapors.

In light of the comments, OSHA is changing the proposed definition (final paragraph (c)(21)) by deleting the phrase "rigid, air-excluding" and substituting the word "coherent" to describe the type of blanket formed by foam. This change in language is consistent with the definition of the term in NFPA Standard No. 11.

In paragraph (c)(23) of the proposal OSHA defines the term "gaseous agent" as an extinguishing agent of low density and vapor pressure which changes volume according to pressure and temperature and which diffuses rapidly and uniformly. The DuPont Company stated (Ex. 7: 93 p.3) "Most gaseous agents (CO_2, Halon 1211, and Halon 1301) do not have low vapor densities. This part of the definition should be deleted." OSHA agrees with this comment and has deleted the term "low density" from the language of the definition (final paragraph (c)(22)). OSHA has also changed the proposed paragraph by inserting the sentence, "Gaseous agent is a fire extinguishing agent which is in the gaseous state at normal room temperature and pressure," because some gaseous agents may be stored as liquids although they are in a gaseous state very shortly after agent discharge.

In paragraphs (c)(24) and (c)(25) of the proposal (final paragraphs (c)(23) and (c)(24)) OSHA defines the terms "Halon 1211" and "Halon 1301" by describing the physical properties of the agents.

In paragraph (c)(26) of the proposal (final paragraph (c)(25)) OSHA defines the term "helmet" as a rigid shell with various accessories intended to be worn for protection of the head from various hazards.

In proposed paragraph (c)(27) OSHA defined the term "incipient stage fire" as a fire that is in its beginning or initial stage and which can be controlled or extinguished by portable fire extinguishers, Class II standpipe or small hose systems without the need for protective clothing or breathing apparatus. One commenter, Western Electric, stated (Ex. 7: 96 p.2):

> The present wording is overly specific in its reference to Class II standpipe systems. Other accepted sources of water for fire hose lines include sprinkler system piping or other components of a piping system used for fire protection. The use of these alternate supplies of water will not reduce the integrity of the over-all fire protection system.

OSHA agrees that the proposed language is too specific particularly since, in the final standard, OSHA is recognizing various sizes of small hose as acceptable alternatives to portable fire extinguishers. Therefore, OSHA has deleted the specific reference to Class II standpipe systems. In its place the final standard (final paragraph (c)(26)) refers to standpipe systems and hose stations connected to a sprinkler system (in accordance with § 1910.159) since such systems are capable of providing extinguishing capability equivalent to portable units.

In proposed paragraph (c)(28), (final paragraph (c)(27)), OSHA defines the term "inspection" as a visual check of fire protection systems and equipment to ensure that they are in place, charged, and ready for use in the event of a fire.

In proposed paragraph (c)(29), (final paragraph (c)(28)), OSHA defines the term "interior structural fire fighting" as the physical activity of fire suppression, rescue or both, inside of buildings or enclosed structures which are involved in a fire situation beyond the incipient stage.

In paragraph (c)(30) of the proposal (final paragraph (c)(29)), OSHA defines the term "lining" as the material permanently attached to the inside of the outer shell of a garment for the purpose of thermal protection.

In paragraph (c)(31) of the proposal (final paragraph (c)(30)), OSHA defines the term "local application system" as a fixed system with a supply of agent designed to discharge the extinguishing agent directly onto the burning material usually in a machine or piece of equipment.

In paragraph (c)(32) of the proposal OSHA defined the term "maintenance" as the performance of services on fire protection equipment and systems including physical disassembly to assure that they will perform as expected in the event of a fire. However, one commenter indicated that physical disassembly is not always a part of maintenance. DuPont stated (Ex. 7: 93 p.3):

> Not all maintenance requires even a partial physical breakdown. For example, weighing of CO_2 or Halon 1211 extinguisher does not involve a breakdown. The final sentence of this definition should be deleted.

OSHA agrees with the comment and has deleted the sentence from the definition (final paragraph (c)(31)).

In paragraph (c)(33) of the proposal (final paragraph (c)(32)) OSHA defines the term "multipurpose dry chemical" as an agent that can be used on Class A, Class B, and Class C fires.

Paragraph (c)(34) of the proposal (final paragraph (c)(33)) defines "outer shell" as the exterior layer of material on a fire coat or protective trousers which forms the outermost barrier between the fire fighter and the environment.

In paragraph (c)(35) of the proposal OSHA defined the term "pipe schedule design." This term is not used in the

final standard; OSHA has therefore deleted the proposed definition.

In paragraph (c)(36) of the proposal, OSHA defined the term "positive-pressure breathing apparatus" as self-contained breathing apparatus in which the pressure inside the full facepiece is positive in relation to the immediate environment. OSHA has corrected this definition (final paragraph (c)(34)) by changing the phrase "inside the full facepiece" to "in the breathing zone" because positive-pressure breathing apparatus may have a hood or helmet instead of a full facepiece.

In paragraph (c)(37) of the proposal OSHA defined the term "pre-action or pre-discharge alarm" as an alarm which sounds prior to a fire extinguishing system's discharge so that the employees may evacuate the area. In the final standard (final paragraph (c)(35)) OSHA has changed the term to "pre-discharge employee alarm." OSHA is making the change because there are different types of pre-discharge alarms which serve purposes other than signaling employees to evacuate or seek a safe area. OSHA is only concerned here with those pre-discharge alarms used to alert all employees in the protected area that the fire extinguishing system is about to discharge its agent.

In paragraph (c)(38) of the proposal (final paragraph (c)(36)) OSHA defines the term "quick-disconnect valve" as a device which starts the flow of air by the insertion of the hose into the regulator of a self-contained breathing apparatus and stops the flow of air by disconnection of the hose from the regulator.

In paragraph (c)(39) of the proposal (final paragraph (c)(37)) OSHA defines "sprinkler alarm" as an approved audible device which signals waterflow through a sprinkler system equal to or greater than that of a single sprinkler.

In paragraph (c)(40) of the proposal (final paragraph (c)(38)) OSHA defines the term "sprinkler system" as a system of piping designed in accordance with acceptable fire protection engineering standards and installed to control or extinguish fires.

In paragraph (c)(41) of the proposal OSHA defined Class II and Class III systems. OSHA has decided to add defintions for Class I and small hose standpipe systems (final paragraph (c)(39)). In the proposal, OSHA did not define Class I systems. However, OSHA does use the term "Class I system" in § 1910.158(a)(2), which exempts that particular class of system from the standard. OSHA believes a definition of the term is necessary since it is used in the final standard. OSHA is defining a "Class I system" as a 2½" (6.3 cm) hose system for use only by those trained in handling heavy fire streams.

OSHA is also defining the term "small hose system" in the final standard to recognize the use of small hose of ⅝", up to, but not including 1½" in diameter as an acceptable substitute for portable fire extinguishers under certain conditions. Traditionally, the term "small hose" has been used to refer to "Class II standpipe systems" because "Class II system" hose was smaller in diameter than the 2½" hose found in Class I systems. (Class I systems were referred to as "large hose systems.") OSHA believes that the term "small hose" should be used to define hose which has a diameter of ⅝" up to, but not including 1½". OSHA will continue to recognize 1½" hose systems but rather than refer to them as "small hose," OSHA will refer to them specifically as Class II systems. OSHA believes this change will clarify what size hose systems OSHA is referring to when it uses the term "small hose" or "Class II" standpipe systems.

In paragraph (c)(42) of the proposal (final paragraph (c)(40)) OSHA defines the term "total flooding system" as an extinguishing system which discharges a predetermined concentration of agent into an enclosed or confined space for the purpose of extinguishment or control. A commenter, M&M Protection Consultants (Ex. 7: 11), suggested that the word "concentration" be changed to "amount." They contended that concentrations are difficult to maintain especially when there is agent leakage from the room. OSHA believes that total flooding systems must be designed to provide the concentration of agent necessary to extinguish anticipated fires. System designers should require the appropriate amount of agent necessary for the desired concentration to be provided in the area. For the system to achieve its designed function, a specific concentration must be discharged into the room. If leakage is a problem, then the employer must correct the problem or account for it in determining the design concentration necessary to extinguish or control a fire.

In paragraph (c)(43) OSHA proposed to define the term "training" as the process of making proficient through instruction and practice. Training includes hands-on training of industrial fire brigades or emergency action teams in the duties they are expected to perform.

One commenter, the J. I. Case Co. (Ex. 7: 74) noted that the term "emergency action team" was used in the proposed definition but not defined. OSHA has decided to simplify the definition (final paragraph (c)(41)) by deleting the second sentence and revising the first sentence to indicate that the term "training" as used in this Subpart always includes hands-on practice in the operation of equipment that is expected to be used and in the performance of assigned duties. In brief, the term "training," as used in this subpart, refers to hands-on training.

In paragraph (c)(44) of the proposal (final paragraph (c)(42)) OSHA defines "vapor barrier" as the material used to prevent or inhibit the transfer of liquids and vapors from outside through the garment onto the wearer's body.

Section 1910.156 Fire brigades.

Prior to this revision, Subpart L contained a section reserved for fire brigades, 1910.164. As a result of the revision to Subpart L, requirements for fire brigades are contained in new § 1910.156.

Scope and application: Paragraph (a). The fire brigade standard does not require an employer to establish a fire brigade. However, whenever fire brigades are established, the requirements of this section apply.

Paragraph (a)(1) of the final standard defines the scope of the fire brigade standard, which covers requirements for the organization, training, and personal protective equipment for fire brigades.

Paragraph (a)(2) specifies that the fire brigade standard applies to employers who have employees who are members of fire brigades, industrial fire departments, and to private or contractual type fire departments.

The proposal did not make it clear that requirements for personal protective equipment apply only to fire brigades expected to perform interior structural fire fighting. This resulted in several commenters (Ex. 7: 103; 108; 124; 132; 151; 178) misinterpreting the applicability of the standard. Therefore, changes have been made in the application statement to clarify that requirements for personal protective equipment apply only to fire brigades expected to perform interior structural fire fighting.

This standard does not apply to volunteer fire fighters or fire departments operated by the United States, or any state or political subdivision thereof unless covered by a State Plan under Section 18 of the Act. Additionally, the fire brigade standard does not address the hazards of, nor does it apply to, forest fire fighting or airport "crash-rescue" type operations. The requirements of this standard would not be appropriate because of the specialized nature of these types of fire fighting operations.

Organization: Paragraph (b). Paragraph (b)(1) of the proposal required the employer to prepare and maintain a statement or written policy which established the existence of a fire brigade and which described the functions that the fire brigade is to perform at the workplace. The proposal required that the organizational statement be available for inspection by the Assistant Secretary or by employees or their designated representatives.

The organizational statement is intended to be a tool to aid employees in understanding their responsibilities as fire brigade members as well as helping the compliance officer in determining if the level of training is consistent with the functions the fire brigade is expected to perform.

Three comments OSHA received (Ex. 7: 75; 153; 176) discussed the value of having a written policy or procedure in regard to training. They supported the concept that the type, amount, and frequency of training be specified in the organizational statement. OSHA believes that these comments have merit. Specifying the level of training in the organizational statement, will make it easier to determine if the level of training fire brigade members receive is consistent with those functions they are expected to perform.

Accordingly, the type, amount, and frequency of training that fire brigade members are to receive has been added as an element to be specified in the organizational statement.

The organizational statement is a very important document since it describes the type and expected size of the fire brigade, the organizational structure and the functions to be performed, as well as the level of training to be provided. It is necessary that the organizational statement be available for inspection by the Assistant Secretary, employees, or their designated representatives.

Paragraph (b)(2) of the proposal addressed the concept that fire brigade members who are expected to do interior structural fire fighting must be physically capable of performing the duties assigned to them during emergencies or other operations. The proposal also specified that the employer shall not permit employes with known heart disease, epilepsy, or emphysema to participate in fire brigade emergency activities unless permitted by a certificate from a licensed physician.

This paragraph was one of the most controversial subjects of the proposed standard for fire brigades. OSHA received comments ranging from those who, at least in concept, agreed with the requirement (Ex. 7: 57; 73; 75; 129; 153; 158; 168) to those who strongly disagreed with the requirement as proposed (Ex. 7: 76; 82).

Mr. Gerald Reyenga (Ex. 7: 76) of Local 4–228, Oil Chemical and Atomic Workers International Union (OCAW), expressed concern that the proposed requirement could be used by employers to disqualify employees from a job which they were, in all other respects, physically qualified to do; could result in demotion of employees to lower paying jobs; could result in discrimination against older employees; and could result in an adverse effect on retirement and/or pension plan benefits. Mr. Reyenga requested a hearing on this issue.

In another comment (Ex. 7: 82 p.2), Mr. Steven Wodka, international representative of OCAW, expressed concerns similar to those of Mr. Reyenga. Mr. Wodka stated, in part:

> We are not opposed to OSHA requiring that fire fighters be physically fit. But for the first time OSHA is proposing to make such fitness requirements mandatory without considering the impact of such requirements on workers with various physical ailments who currently hold jobs that also require them to be fire fighters. In many instances these are older workers who would have a very difficult time in finding another job at comparable pay. Moreover, if these workers had to take lower paying jobs, their pension or retirement benefits would also suffer. Therefore, if OSHA is going to make physical fitness requirements mandatory, then OSHA must also promulgate a medical removal protection benefits system.

In a later comment (Ex. 7: 167 p.1), Mr. Wodka said that additional thought and consideration was given to this issue and stated:

> It is now our position that employers in high hazard industries, namely oil refining and petrochemical, must be required to establish full time, professional in-plant fire brigades who would be properly equipped and highly trained. It is our belief that the current industry practice (particularly in oil refining) of assigning fire brigade duties to workers who are regular full time production or maintenance workers can never be made safe to a reasonable degree.

Mr. Wodka reiterated a request for a public hearing limited to these issues and to the issues of medical surveillance, training, clothing, and equipment for industrial fire brigades.

There were other requests for a public hearing on the proposed fire brigade standard. These other requests for a public hearing (Ex. 7: 61; 172) pertained to the proposed requirement that only positive-pressure self-contained breathing apparatus be allowed to be worn by the fire brigade members while performing interior structural fire fighting.

Based on these requests for a public hearing, OSHA decided to schedule a public hearing to resolve these issues. While in the process of identifying the specific issues to be addressed at the public hearing, OSHA received an additional comment (Ex. 7: 194 p. 1) from OCAW which stated in part:

> In earlier correspondence dated March 13, and April 16, 1979, we requested a hearing on several aspects of the fire brigade proposals. We now would withdraw those requests for a hearing if we are provided with a hearing on the heart of our concern: that is, the right of an employee, who is not hired by the employer to be a full time professional fire fighter, to refuse the duties assigned to fire fighting teams or fire brigades. If OSHA were to issue this type of a rule as part of a fire brigade standard, then it would be unnecessary to hold a hearing on our previously mentioned concerns of medical surveillance, training, clothing, and equipment for industrial fire brigades. It is our view, and one which we could support through substantial evidence that could be presented in a hearing, that it is an extreme safety and health hazard to require regular production and maintenance workers to fight fires, particularly in the oil refining and petrochemical industries. Such fire fighting should be performed by full time professional fire brigades.

This latest comment described the most important concern of OCAW, that is, that employees should have the right to refuse to perform fire brigade duties. Even though this issue was not directly addressed in the proposed standard for fire brigades, OSHA believed it was necessary to resolve this issue and to identify its relevance and impact on the fire brigade standard. Therefore, OSHA decided to include the broader issue of an employee's right to refuse fire brigade duties as one of the issues to be addressed at the public hearing on fire brigades, as well as the question of employees being physically capable of performing the duties assigned to them.

During the hearings, Mr. Wodka and eight OCAW members from different facilities, discussed the problems and "real life" situations associated with fire brigades at their respective facilities.

Important among the OCAW concerns were problems associated with the lack of adequate training, lack of fire fighting equipment for use by fire brigade members, and lack of maintenance of the fire fighting equipment. OCAW contended that these problems could be alleviated by a voluntary fire brigade system.

In his testimony (Tr. 504–505), Mr Wodka stated:

> A full time professional fire brigade is most desirable. However, we are well aware of the problems that such are proposal would create. Therefore, we recommend that OSHA

promulgate a regulation that states that all industrial fire brigades be staffed on a voluntary basis. This simple rule would by itself resolve all the current shortcomings that our people will testify about today.

First, a voluntary brigade sets up a performance standard for industry on the issue of training. Sufficient training that addresses the particular risks in each plan will be an incentive for workers to volunteer for the brigade.

Likewise, the fire fighters would be better equipped and such equipment better maintained under such a performance standard. Also, the need for rate retention for those failing the physical exam will be eliminated because of the self-selecting nature of a voluntary brigade.

In further testimony (Tr. 505–506) Mr. Wodka remarked:

* * * we are not advocating that voluntary means that each worker decides as a fire is burning as to whether or not he or she will fight the fire. No one, particularly the OCAW, wants its people placed in that kind of jeopardy.

Instead, a reasonable lead time could be built into the standard to allow industry time to beef up their fire fighting equipment and fire brigade training program. Then, at the time of the effective date, an orderly changeover could take place from the mandatory system to the voluntary brigade.

In support of the right to refuse issue, OCAW members discussed the shortcomings of the mandatory system with respect to the lack of adequate training and equipment as well as discussing the benefits and effectiveness of a voluntary fire brigade system now in use at one corporation's facilities.

The following portions of OCAW testimony describe their experiences with inadequate training and equipment provided to mandatory fire brigades.

Mr. Pittman (OCAW Local 4–23) stated (Tr. 511) that:

* * * employees are assigned to fire fighting because they are convenient, not because they are properly trained as fire fighters. Employees feel they are being forced to perform a duty and we have the right to refuse.

In further testimony, Mr. Pittman said that training is almost non-existent when related to the potential danger confronted by fire brigade members (Tr. 511). As an example, he stated (Tr. 512) that fire brigade members receive little training in the use of respiratory equipment. He also added (Tr. 512): "* * * training usually consists of one or two hours a year. Some employees may go for years without training in this area."

Mr. Le Blanc (OCAW Local 4–23) commented (Tr. 520):

* * * we feel that the training and equipment is inadequate and poses danger to our members. OSHA should release our members from the mandatory requirements of participating in a fire fighting organization. Fire fighting should be left to persons trained and qualified (for) the hazards that fire fighting may entail.

Mr. Breaux (OCAW Local 4–23) remarked that there is no continuity to the people available for brigade training because of brigade member vacations, days off, sickness, etc. (Tr. 525). In further testimony (Tr. 516) Mr. Breaux stated:

The big spiel has been that the people in the plant know how to fight the fire and if people in the area know how to fight the fire and what's there, they would be the most valuable. But when you have a man with six months or less in a refinery in the fire brigade, he doesn't know any more about that particular area probably than anybody who could volunteer from in the plant.

Mr. Fuselier (OCAW Local 4–500) commented (Tr. 529):

I have had the opportunity to observe for several years fire drills with its continuous change of young and totally inexperienced participants. These young men and women are not knowledgeable of overall unit operations, its products, its flash points, or fire potential, much less how to fight it or what equipment to use on certain fires.

In further testimony, Mr. Fuselier described his experience with inadequate fire fighting equipment and inadequate maintenance of fire fighting equipment (Tr. 533–535, 538). As an example, he stated (Tr. 533):

I have fought along with others major fires and numerous potentially explosive fires and have yet to see a bunker coat, fireman's boot, face shields, hats, or any other personal equipment.

Mr. Naquin (OCAW Local 4–447) stated (Tr. 541, 544):

In the area of fire training for instance employee training is either nonexistent or very minimum. Training classes in my plant for instance, have not been held for at least three years and perhaps four (or) more. Lack of training like this is not unusual in all of our plants.

Shift supervisors at my plant are sent to Texas A & M for fire training or Louisiana State University School for Fire Fighting for anywhere from two days upwards to five days. They come back to the plant with all this new knowledge, and it must be a secret because they keep it to themselves. They hold no further classes for their men and it is even conceivable that the supervisors who have received this training could end up all on the same shift. In other words, there is no guarantee that the supervisor on shift at the time of a fire has had any extensive training at all.

Mr. Naquin also asserted in his testimony that plant fire fighting equipment is not kept in good operating condition. He described instances where fire hoses had been rolled up in such a manner that they could not be readily unrolled. In some cases they were not located where they were supposed to be located because of being removed by a cleaning crew or because they were used elsewhere and not replaced.

Mr. Naquin described an instance in one plant where a fire cart had been placed in operation but no one knew how to use it and some employees did not even know of its existence (Tr. 542).

Mr. Rome (OCAW Local 4–522) stated that during his first years at the plant, on a voluntary fire brigade, the training provided was very good. However, after 8 or 10 years, fire brigade training became less important to the company (Tr. 549–550).

Mr. Rome thought that voluntary fire brigades had not worked in the past because the company failed to provide the training needed. As a result, the volunteers resigned from the fire brigade (Tr. 551).

In his testimony (Tr. 550), Mr. Rome suggested that OSHA set up a Federal regulation of fire brigade duties which could be refused due to personal reasons: "No one should be forced to do a job for which they fear their health and safety (sic) no matter where employed."

In comparison to testimony describing instances of inadequate training and equipment in mandatory fire brigades, Mr. Greenwell (OCAW Local 4–16000) described the positive attributes of a voluntary fire brigade program at the Ethyl Corporation. Mr. Greenwell stated (Tr. 555) that the union together with company management developed a voluntary fire brigade program to the effect that:

Those who volunteer for this program will be given thorough training, updated equipment, and incentives which in a small way represent the respect and thanks due these volunteers from all who work at the plant. From those who volunteer, we expect good health, agility, a high degree of interest and a dedication which will make our fire brigade second to none in this area.

The details of the Ethyl Corporation program include the following (Tr. 555–556):

Training is conducted both on and off the plant. On-plant training consists of classroom sessions, plant tours to familiarize members with all areas and their associated hazards, and field exercises.

This is accomplished on an overtime basis with a minimum of 12 hours per year and that minimum I'm sure is a strict minimum because there is much more from what I have observed.

Off-plant training is conducted at Texas A & M University and consists of two days of field exercises. The entire brigade will be scheduled for this training and will receive

refresher training at least once every three years.

Fire fighting equipment is continuously surveyed and updated new. Personal protective equipment will be provided for brigade members and will be located throughout the plant for use in emergencies. This is the bunker coats with the boots and everything and everyone has one of their own.

Mr. Greenwell commented that there are incentives that companies can provide to voluntary fire brigades to make this kind of system work if companies want it to work (Tr. 561). He described some of the incentives provided to members of the voluntary fire brigade at the Ethyl Corporation. These incentives included distinctive colored clothing, identifying shoulder patches, ball caps, yearly banquets, and special fire fighter's insurance (Tr. 557).

In summary, proponents of the position of giving employees the right to refuse fire brigade duties contend that the "real world" conditions of mandatory fire brigades result in inadequate training, inadequate fire fighting equipment, and poor maintenance of the fire fighting equipment. These proponents further contend that a voluntary fire brigade would alleviate these conditions, and given proper training, adequate fire fighting equipment, and incentives, voluntary fire brigades can, and do, work.

Several of those opposed to the position of giving employees the right to refuse fire brigade duties questioned OSHA's statutory authority to mandate such a provision (Tr. 152–153, 387–389, 675, 686–687, 804–805, 862), (Ex. 93), (Ex. 96), (Ex. 97). For reasons which are discussed in detail later, the final standard does not incorporate a right to refuse provision; hence, the question of OSHA's authority to promulgate such a provision need not be addressed here.

Those opposed to the position of giving employees the right to refuse fire brigade duties contended that injury and fatality data show no substantial or undue safety hazard involved in performing such duties. (Tr. 148, 589–590, 686), (Ex. 47), (Ex. 84), (Ex. 85), (Ex. 96), (Ex. 8). The Texas Chemical Council, for example, reported that 84 fire brigades responded to 5,000 alarms over the last eight and one-half years. There were eight lost-time injuries and no fatalities (Tr. 638). Upjohn's La Porte plant reported no injuries over the last nine years (Tr. 667). DuPont reported four minor injuries over the past eight years (Tr. 169). Celanese had 5,359 calls over the past ten years and reported four minor injuries (Tr. 282). The Chemical Manufacturers' Association (CMA) surveyed its membership with sixty-nine member companies responding. Those companies reported that during an eight year period, 1971 through 1978, there were no fatalities to fire brigade members, twenty-five lost-time injuries, and eighty-nine other OSHA recordable injuries. The total of 114 injuries represents injury to less than one percent of the number of employees serving on fire brigades at these companies (Ex. 84).

OCAW contended that the petroleum industry is a "high hazard" industry and, because of the possible risks involved in fighting fires in such industries, employees should be permitted to refuse to perform fire brigade duties. Those opposed to the right to refuse alleged that the characterization of the petroleum industry as a high hazard industry is not supported by statistical comparisons of industrial safety data for different industries (Ex. 97). Data compiled by the Bureau of Labor Statistics for 1977 show that employees in the refining and chemical industries have among the lowest injury rates for manufacturing establishments. It was contended that these workplaces are safer than 90 percent of all other manufacturing establishments (Tr. 643, 865), (Ex. 64: attachment II), (Ex. 97).

Those opposed to the position of giving employees the right to refuse fire brigade duties also contended that there should be several options available to the employer with respect to the type of fire brigade chosen for individual workplaces (Ex. 95), (Ex. 97), (Tr. 151, 155). Such options include mandatory fire brigades, voluntary fire brigades, full-time fire brigades, or reliance on municipal or local fire departments to provide fire fighting services. In a post-hearing comment (Ex. 97, p. 1), the American Petroleum Institute (API) stated:

> The inclusion of a right-of-refusal in the final fire brigade standard would effectively delete one very important option—the mandatory industrial fire brigade—and impair the ability of employers to fight fires in their facilities.

It is further contended by those opposed to the position of giving employees the right to refuse fire brigade duties, that if the option of mandatory fire brigades is eliminated, the other options (voluntary fire brigades, full-time fire brigades, or reliance on fire fighting facilities outside the plant) would not be feasible, would reduce employee safety at the workplace, and would be extremely costly.

Witnesses suggested several reasons why an all volunteer fire brigade system would not be feasible. First, there may be problems with recruitment of volunteers. Several witnesses stated that if employees were given the right to refuse fire brigade duties, fire brigade participation would be severely reduced (Tr. 311, 389, 641–642, 647). There was also some doubt on the part of one OCAW witness as to the number of employees who would volunteer to serve on a fire brigade, regardless of the training, equipment, and incentives provided (Tr. 578–579).

Second, with a volunteer fire brigade, a full complement of volunteers might be unavailable during each shift, thus creating a shortage of fire brigade members available for fire fighting activities. This shortage, or imbalance, would be impossible to remedy with other than full-time fire fighters (Tr. 133, 311, 357, 389, 825–826, 827, 861). In order to avoid a shortage of fire brigade members, employers argued that they must be able to retain the discretion to fill the balance of the positions on a mandatory basis (Tr. 647, 666, 671).

Third, a related problem is the employer's inability to control the operating units from which fire brigade members are drawn. Conversion to volunteer fire brigades would eliminate the employer's ability to select fire brigade members according to the importance of their regular duties. In a post-hearing comment (Ex. 97, p. 8) API remarked:

> Companies may not arbitrarily assign specific employees to perform fire brigade service because of the need to ensure that the continued safe operation of other operating units uninvolved in the fire is not jeopardized.

Additionally, Mr. O'Neal of Texaco (Tr. 684) stated:

> Fire brigades are composed of people who can safely leave their routine work assignments in the event of a fire call. Brigade members normally have jobs that do not require constant monitoring, may be monitored by others who are at the work site, or can be readily and safely shut down.

Testimony and post-hearing comments (Tr. 639, 653), (Ex. 47) also suggested that fire brigades are normally composed of operating and maintenance personnel with specialized knowledge of plant layout and operations. This specialized knowledge significantly enhances the fire suppression efforts of the fire brigade. If the right to refuse to perform fire brigade duties were permitted, employers would not have the flexibility to assign employees with this specialized knowledge to the fire brigade.

An alternative to a volunteer fire brigade is a full-time in-plant fire

brigade. Those opposed to giving employees the right to refuse fire brigade duties contended that this alternative also has many shortcomings.

First, there would be substantial costs involved in establishing and maintaining full-time fire brigades. The costs expected to result from the establishment of such fire brigades were described in both testimony and in post-hearing comments (Tr. 150, 173, 184, 289, 292, 359, 360, 392, 393, 337, 491–492, 592, 640, 667–668, 689–690, 827–828, 857–858), (Ex. 47), (Ex. 84), (Ex. 85), (Ex. 87), (Ex. 98). Even when considering a reduction in lost production time and training costs that might result from the establishment of full-time fire brigades, one commentor (Ex. 96) estimated that the expected cost impact of full-time fire brigades would be in excess of one billion dollars.

Second, full-time in-plant fire brigades would not be cost-effective. Witnesses contended that for the majority of facilities, only a small percentage of a fire brigade's time is spent responding to emergencies (Tr. 684–685, 827). As an example, Mr. Richardson stated (Tr. 86): "probably only one to five percent of a fire brigade's time is actually spent on emergency operations." Since only a small percentage of time is spent responding to emergencies, it would not be cost-effective to have a full-time in-plant fire brigade when such fire fighting could be safely performed by full-time production or maintenance personnel with part-time duties as fire brigade members.

Third, reliance upon full-time brigades may cause delays in response time to fires as well as a reduction in fire fighters' familiarity with plant processes (Tr. 489, 654, 828), (Ex. 97). It is contended that the fastest response time in the event of a fire is accomplished by operators in each plant who are familiar with hazards of the plant and trained to respond to fires (Ex. 93 pp. 4–5). These employees are the first-line defense against small fires. Having a centrally located full-time fire brigade could increase response time, thus allowing small fires to become larger.

In summarizing the hearing testimony, Standard Oil of Indiana stated in its post-hearing comment (Ex. 96 pp. 11–12):

> A full-time force would not be familiar with plant processes, the safety consciousness of the employees would be lowered, prevention effectiveness would suffer because fire prevention and fighting would no longer be an integral part of the job, and there may very well not be sufficient professional fire fighters available to staff these full-time brigades.

The other alternative to a voluntary fire brigade is reliance on off-plant fire fighting organizations. It is contended that this alternative also would present many problems. First, off-plant fire departments are hampered in their efforts to respond quickly both by distance from the site of the fire, and unfamiliarity with the layout of the plants. These departments usually lack the specialized equipment and training necessary to combat industrial fires such as those at refineries and chemical plants (Tr. 642, 654, 672–673, 820).

Second, some plants are located in areas where there are no off-plant fire departments. Accordingly, employers in these areas would have to organize a volunteer fire brigade or a full-time fire brigade with the resulting problems outlined above.

It is contended that reliance on off-plant fire departments is the least desirable alternative (Ex. 97 p. 12). Factors such as unavailability of off-plant fire departments, increased response time, and unfamiliarity with plant layout and processes, would increase risk to employees rather than enhancing their safety.

In summary, in addition to questions concerning statutory authority, those opposed to the position of giving employees the right to refuse fire brigade duties contended that the fire brigade duties can be performed without substantial or undue hazard to employees. Additionally, employers argued that if the standard provided for a right to refuse, they would have to rely on less satisfactory alternatives such as volunteer fire brigades, in-plant full-time fire brigades, or off-plant fire departments.

Those opposed to giving employees the right to refuse believe that it is imperative that employers have the flexibility to choose the type of fire brigade which will best meet the needs of their individual workplaces.

After careful examination of the record, OSHA believes that the safety of fire brigade members does not depend on their right to refuse to perform fire brigade duties. Accordingly, the final standard for fire brigades does not address the issue of the right to refuse to perform fire brigade duties. It is the position of OSHA that, given proper training and fire fighting equipment, fire brigade duties can be performed by physically capable employees without undue hazard to their safety.

OSHA is mandating specific requirements in the final standard to assure that brigade members are physically capable of performing duties assigned during emergencies, that proper training is given to brigade members and that properly maintained fire fighting equipment is available for their use.

A basic issue in this regard involves employees' physical capability to perform the fire brigade duties which they are assigned.

Several commenters supported the "physically capable" requirement as proposed by OSHA. For example, one commenter (Ex. 7: 129 p. 3) stated:

> To insure the physical capability of fire brigade personnel, it would be advisable to have a certificate from a licensed physician annually, to provide safety for emloyees who are expected to perform such duties.

In another comment (Ex. 7: 158 p. 1) it was stated: "I agree that the fire brigade member should be physically fit to perform his duties."

Another commenter (Ex. 7: 75 p. 3) remarked:

> We agree with the intent and the manner in which OSHA has resolved the physical capability requirement for fire brigade members. The performance requirement that the employer shall ensure that employees who are expected to do interior structural fire fighting are physically capable, will result in appropriate criteria or tests, coupled with medical judgment which considers the type of exertion which may be required on that particular brigade. The additional requirement of a certificate from a licensed physician to permit certain employees to engage in fire brigade emergency activities, is also appropriate.

As discussed previously, those persons opposed to the physical capability requirement were concerned that such a requirement may result in employees being transferred to lower paying jobs and/or having their benefits adversely affected.

This certainly was not OSHA's intent. OSHA only wants to assure that fire brigade members who perform interior structural fire fighting are physically able to perform the duties assigned to them so that they will not endanger themselves or other employees. Employees who cannot meet the physical capability requirement may still be members of the fire brigade if such employees do not actually perform interior structural fire fighting.

These brigade members can be assigned less stressful and physically demanding fire brigade duties, such as certain types of training, recordkeeping, fire prevention inspection and maintenance, and fire pump operations. Performance of these kinds of duties would still enable such employees to be members of the fire brigade but would prevent them from placing themselves in situations which they might not be physically able to handle.

Several witnesses supported this concept (Tr. 86, 597, 693, 806, 863). For example, one witness (Tr. 86) remarked:

> The wise management will recognize all the tasks which must be performed during an emergency and see to it that there are people capable and trained to perform them. Experienced people within the workplace do not have to be excluded from the fire brigade's activities. Long years of fire brigade experience and knowledge are utilized by wise managers by assigning older personnel to positions of support and staff assistance.
>
> During the actual emergency, older members can be used for some of the following tasks which are also vital parts of the fire brigade's responsibilities: Communications, supervision of fire pumps, supervision of sprinkler valves and security of the emergency scene. Senior and experienced personnel are ideal for these tasks while the more physically fit members are reserved for the actual fire fighting * * *

Another witness (Tr. 863) stated:

> * * * there are many fire brigade functions to be performed that can safely be handled by less able individuals. These functions are just as vitally important to a truly effective fire protection capability, as is being the person who does the actual fire fighting.

Therefore, it is the position of OSHA that those employees assigned to the fire brigade, who are expected to perform interior structural fire fighting, must be physically capable of doing so. Additionally, this requirement would not have an adverse effect on fire brigade members who are not physically capable of performing interior structural fire fighting. Such employees can still be members of the fire brigade and perform less stressful and physically demanding duties.

The original requirement proposed by OSHA also stated:

> The employer shall not permit employees with known heart disease, epilepsy, or emphysema, to participate in fire brigade emergency activities unless permitted by a certificate from a licensed physician.

There may be other diseases or physical conditions which should preclude employees from engaging in this type of activity. However, OSHA believes that a physician's certificate should be required by the standard for only the most obvious physical disorders. Other physical disorders which would impair the ability of fire brigade members to participate in emergency activities can be handled on a case by case basis with the advice of a physician who is aware of the type of duties that fire brigade members are expected to perform.

The original requirement proposed by OSHA, paragraph (b)(2), also specified that employees expected to perform interior structural fire fighting must be physically capable of performing duties assigned to them during emergencies "and other operations."

One comment OSHA received (Ex. 7: 176 p. 3) stated "We ask that the phrase 'and other operations' be deleted from this section since it is vague, ambiguous, and undefined."

OSHA agrees with this comment. The intent of the paragraph is to assure that fire brigade members are physically capable of performing the duties assigned to them during emergencies, i.e., when performing interior structural fire fighting, and not during other unspecified operations.

For the purposes of the standard, it is necessary to determine when an employee is "physically capable" of performing fire brigade duties. One commenter (Ex. 7: 176) suggested that "physically capable" be defined as being able to perform the tasks subject to the training requirements contained in § 1910.156(c). OSHA believes that this comment has merit. If fire brigade members can perform the duties to meet the training requirements, then such fire brigade members should be able to perform their assigned duties in a real fire situation.

Therefore, fire brigade members will be considered as meeting the "physically capable" requirement as stated in paragraph 1910.156(b)(2) of the final standard if they are able to perform the functions and duties subject to the training requirements specified in paragraph 1910.156(c).

An employee's physical capability to perform duties assigned can also be determined by physical performance tests, or by a physical examination when the examining physician is aware of the duties that fire brigade members are expected to perform. Several witnesses (Tr. 162, 170, 183–184, 318, 338, 646, 667, 688, 863) supported the latter concept. For example, one commenter (Tr. 863) stated:

> The minimum physical capability requirements for any industry assignment including participation on the fire brigade, should be established according to functions the individual has agreed to perform and should therefore be determined by a duly licensed physician who is familiar with, knows, and understands the local conditions as well as the functions an employee is expected to perform.

Final paragraph (b)(2) requires the employer to assure that employees who are expected to do interior structural fire fighting are physically capable of performing assigned duties during emergencies. It also requires a physician's certificate of fitness for fire brigade members with known heart disease, emphysema, or epilepsy, before such members are permitted to participate in fire brigade emergency activities.

Final paragraph (b)(2) is effective on December 15, 1980, for all fire brigade members assigned on or after September 15, 1980.

OSHA presumes that current fire brigade members assigned before September 15, 1980, are presently capable of performing their assigned duties on the fire brigade. However, to assure that they maintain their present capabilities in the future, the physical capability requirements of the paragraph will apply to these members as of September 15, 1990. This additional time will allow employers sufficient time to assure the physical capability of the many employees who are currently members of fire brigades.

OSHA believes that in addition to being physically capable, fire brigade members should also remain physically fit. Even though OSHA is not mandating any specific physical fitness program for brigade members who are expected to perform interior structural fire fighting, a physical fitness program designed to maintain the physical capability of such brigade members is certainly encouraged.

The value of a physical fitness program has been identified in at least one recent study of fire fighters (Tr. 24) entitled: "A Case Study in Physical Fitness: The Alexandria Fire Department." This study concluded that a physical fitness program does have an impact on risk factors associated with heart disease and back injuries. OSHA believes that a physical fitness program could be valuable in improving the cardiovascular system and could even help to reduce the number of back injuries, strains, and sprains which are experienced by those who engage in fire fighting operations.

Training and education: Paragraph (c). Paragraph (c)(1) of the proposal required employers to provide training to employees commensurate with those functions that the fire brigade is expected to perform. This performance-type requirement was intended to provide enough flexibility so that employers could develop a training program which would best meet the needs of their particular type of fire brigade.

OSHA received comments which supported the concept that training requirements be broad and flexible in order to meet the needs of the individual type of fire brigade (Ex. 7: 75; 119; 168), (Ex. 95), (Ex. 97). For instance, a post-hearing comment (Ex. 95 pp. 1–2) stated that the performance-type training standard proposed in paragraph (c)(1):

. . . is a must for any industrial standard to be effectively applied to all types of industries or to different facilities within a given industry. Our Texas Industrial Fire Training Board found, after approximately one to one and one-half years work, that predetermined specific training requirements will not serve the best interests of the fire brigades, fire suppression/prevention, or the fire service in general. Due to the different types of possible industrial fires, process equipment, suppression equipment, and techniques involved in the different industries (and even from facility to facility within the same general industry), specific training requirements would be overrestrictive or nonapplicable for some, while being too elementary and not comprehensive enough for others.

However, other comments suggested that OSHA impose specific training requirements which would apply to all fire brigades. Some of these comments suggested that the training requirements be based on guidelines published by universities or national fire organizations (Ex. 7: 82; 153; 162; 176), (Ex. 99).

Most of the comments did agree that the type, amount, and frequency of training should reflect the type of functions and duties that fire brigade members are expected to perform. Obviously, fire brigade members who are expected to perform interior structural fire fighting will require training and education which is more comprehensive and more frequent then those fire brigade members who are expected to control or extinguish fires only in the incipient stage. Similarly, fire brigade leaders and fire brigade training instructors will require training and education which is more comprehensive than the general membership of the fire brigade.

It is appropriate to note the difference between training and education. Training means the process of making proficient through instruction and hands-on practice in the operation of equipment that is expected to be used and in the performance of assigned duties. Education means the process of imparting knowledge or skill through systematic instruction. Education can be accomplished by providing employees with written instructional material. It does not require formal classroom instruction.

An education session is not meant to have the same purpose as training. An education session may include discussion of written material, hazards in the workplace, etc., but does not require hands-on practice in the use of equipment.

OSHA wants to assure that fire brigade members are properly trained and educated in those duties they are expected to perform. However, OSHA does not want to establish the type of training program or the specific elements of the training program for all employees.

This is because the type, amount, and frequency of training will be as varied as are the purposes for which brigades are organized. Consequently, it would be extremely difficult for OSHA to mandate meaningful detailed training requirements that could be applied to fire brigades with such varied functions. OSHA believes that the employer must evaluate the particular circumstances in the workplace and functions of the fire brigade, and then design and implement an appropriate training program.

The training and education program, to be effective, must be of high quality. Accordingly, the standard uses the training programs provided by several recognized institutions as models, and requires that the employer's program be of a quality similar to those programs. Of course, the employer may send employees to these schools for appropriate training. As an alternative, training programs developed by other institutions or the employer may be used if they are of similar quality.

The organizational statement required by paragraph (b)(1) of the final standard must identify the functions that the fire brigade is expected to perform. Using this information, and in consultation with the employees where possible, the employer is required by paragraph (c)(1) to design a training program which will be consistent with the performance of these functions. There are many excellent sources of information available which may be helpful in developing a training program that meets the needs of a particular workplace fire brigade. These sources include publications, seminars, and courses offered by universities and fire training organizations, as well as information contained in the appendix to the fire brigade standard.

There are also excellent training courses offered by such facilities as Texas A and M University, Delaware State Fire School, Lamar University, and Reno Fire School, that deal with those unique hazards which may be encountered by fire brigades in the oil and chemical industry. These schools and others also offer excellent training courses which would be beneficial to fire brigades in other types of industries. These courses should be a continuing part of the training program and employers are strongly encouraged to take advantage of these excellent resources.

As discussed previously, it would be difficult for OSHA to mandate specific training requirements for all types of fire brigades. However, in order to develop a training program which will be commensurate with the functions that the fire brigade is expected to perform (i.e., those functions specified in the organizational statement), the following basic elements of a training program should be considered.

All fire brigade members should be familiar with exit facilities, location and emergency escape routes for handicapped workers, and the workplace "emergency action plan."

In addition, brigade members who are expected to control and extinguish fires in the incipient stage shall, at a minimum, be trained in the use of the fire extinguishers, standpipes, and other fire equipment they are assigned to use. They should also be aware of first-aid medical procedures and procedures for dealing with special hazards to which they may be exposed. Training and education will usually include both classroom instruction and actual operation of the equipment under simulated emergency conditions. Training must be conducted at least annually, as specified in § 1910.156(c)(2), but some functions should be reviewed more often. As noted earlier, the term "training", as used in Subpart L, refers to hands-on training.

In addition to the above training, fire brigade members who are expected to perform emergency rescue and interior structural fire fighting must, at a minimum, be familiar with the proper techniques in rescue and fire suppression procedures. Training and education should include fire protection courses, classroom training, simulated fire situations including "wet drills" and, when feasible, extinguishment of actual mock fires. As specified in § 1910.156(c)(2) of the final standard, the frequency of education must be at least quarterly, with training being conducted at least annually. However, some drills or classroom instruction should be conducted as often as monthly or even weekly to maintain the proficiency of fire brigade members.

The above recommendations should not be considered to include all of the necessary elements for a complete comprehensive training program. Other elements of the training program must reflect those duties the fire brigade is expected to perform as determined by the specific workplace.

As discussed previously, testimony presented at the hearings indicated that not only was existing training inadequate, but it was also affected by such factors as days-off and vacations. Because of these factors, fire brigade members often did not receive training

before actually performing fire brigade emergency activities. Testimony and comments support the concept that fire brigade members must receive training *before* performing emergency activities. For instance, one commenter (Ex. 7: 26) remarked: "Mention should be made that members obtain hands-on training prior to full brigade membership." OSHA agrees with this concept. No matter how good a training program is, it is useless unless fire brigade members receive the training before they have to actually perform fire brigade emergency activities.

OSHA also received comments which suggested that fire brigade leaders and training instructors receive training which is more comprehensive than the general membership of the fire brigade (Ex. 7: 158; 162; 171; 184). For example, one commenter (Ex. 7: 171 p. 1) said:

> You spell out that training will take place, but no where (sic) do you state who (or what qualifications) will do the training. It is my recommendation that a paragraph be added that states that the trainer shall meet the minimum Level I of NFPA 1041—Professional Qualifications—Fire Service Instructor. This would provide a minimum verification that the instructor has minimum teaching skills.

Another commenter (Ex. 7: 184 p. 2) added:

> While we agree that employers shall train as outlined in this section, we feel that the individual doing the training should meet the qualifications of NFPA-1041 Level I, which is instructor training. This is to ensure that the brigade members are being trained by qualified personnel.

OSHA agrees that training instructors must receive a higher level of training and education than the fire brigade members they will be teaching. This includes being more knowledgeable about the functions to be performed by the fire brigade and the hazards involved. The instructors should be qualified to train fire brigade members and demonstrate skills in communication, methods of teaching, and motivation.

The level of training for fire brigade training instructors will vary according to the type of fire brigade in the workplace and the nature of workplace hazards. Therefore, OSHA is not mandating specific qualifications for fire brigade training instructors. However, publications from the International Fire Service Training Association, the National Fire Protection Association (NFPA-1041), the International Society of Fire Service Instructors, and other fire training organizations are excellent sources which can be consulted for recommendations.

OSHA also believes that it is imperative that fire brigades have competent leadership and supervision. It is important for those who supervise the fire brigade during emergency situations, such as fire brigade chiefs and leaders, to receive the necessary training and education for supervising fire brigade activities during these hazardous and stressful situations.

For the same reasons as noted above, OSHA is also not mandating specific qualifications or training requirements for fire brigade members with leadership responsibilities. However, these fire brigade leaders should demonstrate skills in strategy and tactics, fire suppression and prevention techniques, leadership principles, pre-fire planning, and safety practices. It is again suggested that fire service training sources be consulted for determining the kinds and level of training which are necessary for those with fire brigade leadership responsibilities.

In summary, it is the position of OSHA that training and education must be commensurate with those duties and functions that fire brigade members are expected to perform, and such training and education must be provided *before* brigade members actually perform fire brigade emergency activities. Additionally, fire brigade leaders and training instructors must be provided training and education which is more comprehensive than that provided to the general membership of the fire brigade.

Accordingly, paragraph (c)(1) of the final standard requires training and education to be provided before fire brigade members perform fire brigade emergency activities. This paragraph also requires that fire brigade leaders and training instructors be provided with training and education which is more comprehensive than that of the general membership of the fire brigade.

Paragraph (c)(2) of the proposal required that training be conducted frequently enough to assure that assigned duties and functions are performed satisfactorily and in a safe manner so as not to endanger fire brigade members or other employees. It also specified that training be conducted at least annually.

The intent of this performance type requirement was to recognize that different types of fire brigades will require different frequencies of training. For example, annual hands-on training may be adequate for those fire brigades who use extinguishers or small hose systems to extinguish fires in the incipient stage. However, for those fire brigades expected to perform interior structural fire fighting, hands-on training may need to be conducted more frequently than annually.

OSHA specified annual training to describe the absolute minimum frequency of training for the simplest fire brigade duties. In accordance with paragraph (c)(1), however, the type, amount, and frequency of training and education must also be commensurate with those duties and functions that fire brigade members are expected to perform. It was OSHA's intention that such training and education might well have to be given at intervals much shorter than one year. However, this was not clear to some commenters. For instance, OSHA received comments which stated that annual training may be adequate for some fire brigades, but not nearly frequent enough for other fire brigades. Many commenters were concerned that if the minimum frequency of training was specified as annually, then only annual training would be provided to fire brigade members, regardless of the type of fire brigade or the type of functions the fire brigade was expected to perform. From this perspective, these commenters believed that just specifying annual training as a minimum was not adequate (Ex. 7: 26; 123; 158; 161; 176; 184).

Some commenters (Ex. 7: 75; 153; 176) believed that some type of training or education should be conducted at least quarterly for those fire brigade members who are expected to perform interior structural fire fighting. The quarterly training or education may consist of hands-on training, pre-fire planning exercises, classes in the use of self-contained breathing apparatus, discussion of special hazards in the workplace, etc. OSHA agrees with these commenters. Based on the record (Ex. 7: 26; 75; 123; 153; 158; 161; 176; 184), it is OSHA's conclusion that hands-on training must be conducted at least annually for all fire brigade members and that some type of training or education session must be provided at least quarterly to those fire brigade members who are expected to perform interior structural fire fighting. Therefore, § 1910.156 (c)(2) of the final standard has been modified accordingly.

Paragraph (c)(3) of the proposal required hands-on training for fire brigade members. The definition for "training" in the final standard and final paragraph (c)(2) of § 1910.156 have been revised to clearly indicate that any requirement for training means hands-on training. Therefore, proposed paragraph (c)(3) is no longer necessary to specify hands-on training and has been deleted from the final standard.

A new paragraph (c)(3) has been added that cites training and education programs provided by several

recognized institutions as models, and requires that the employer's program be of a quality similar to those programs. These institutions' training and education programs are cited only as examples. As an alternative, training and education programs developed by other institutions or the employer may be used if they are of similar quality.

Paragraph (c)(4) of the proposal required that employers inform fire brigade members about special hazards in the workplace. Such locations as storage and use areas of flammable liquids and gases, toxic chemicals, radioactive substances, and water-reactive substances, can pose difficult problems if fire brigade members do not know of the existence of these special hazards or do not receive pre-fire instruction as to what actions to take. It is imperative that fire brigade members be trained in handling these special hazards as well as keeping abreast of any changes that occur in relation to these special hazards.

All of the comments OSHA received supported this requirement. Additionally, two commenters (Ex. 7: 153; 168) suggested that OSHA require the development and dissemination of written procedures to describe actions to be taken in situations involving these special hazards. OSHA agrees with these comments. Written procedures will make it clearer exactly what actions fire brigades members are to take with respect to these hazards during emergencies. Written procedures will also be valuable for training and pre-fire planning exercises.

Therefore, this paragraph (final paragraph (c)(4)) remains the same as that proposed with the exception that written procedures are required to be developed to describe the actions which are to be taken during emergencies involving special hazards. These written procedures are to be made available to fire brigade members and must be included in the training and education program.

Fire fighting equipment: Paragraph (d). This paragraph of the proposal required fire fighting equipment to be maintained and periodically inspected to assure the safe operational condition of the equipment. Fire fighting equipment may include protective clothing, ladders, tools, and nozzles used by fire brigade members for fire fighting purposes.

OSHA received comments (Ex. 7: 128; 176) which suggested that a time interval be specified for the inspection of fire fighting equipment. One commenter (Ex. 7: 176) stated that the term "periodically" is too vague to assure that fire fighting equipment will be adequately maintained. OSHA agrees with this comment and believes that fire fighting equipment must be inspected at least annually. Annual inspections are consistent with section 1910.158 which requires annual inspection for standpipe systems. OSHA believes that, with the exception of portable fire extinguishers and respirators which are required to be inspected monthly, annual inspection of fire fighting equipment is necessary to assure that the equipment will be adequately maintained.

Accordingly, paragraph (d) of the final standard has been changed to require fire fighting equipment to be inspected at least annually.

As discussed before, testimony given at the hearings described instances where fire fighting equipment was inadequate and/or poorly maintained. OSHA believes that these conditions must be corrected whenever they are discovered during the inspection and maintenance procedures required by this paragraph.

Another commenter (Ex. 7: 153) suggested that OSHA require fire fighting equipment which is found to be defective be removed from service.

OSHA agrees with this comment. If fire fighting equipment is found to be damaged or unserviceable, it must be removed from service and replaced to prevent fire brigade members from using unsafe equipment by mistake.

Accordingly, the following sentence has been added to paragraph (d):

> Fire fighting equipment that is in damaged or unserviceable condition shall be removed from service and replaced.

Protective clothing: Paragraph (e). This paragraph contains requirements for protective clothing to be worn by fire brigade members when performing interior structural fire fighting. Several commenters (Ex. 7: 30; 33; 64; 181) misunderstood this paragraph. They believed that the protective clothing requirements applied to all fire brigade members. That is not the intent of this paragraph. The protective clothing requirements apply only to fire brigade members performing interior structural fire fighting; the requirements do not apply to those fire brigade members who only fight fires in the incipient stage.

Therefore, paragraphs (e)(1)(i) and (e)(1)(ii) of the proposal have been consolidated as paragraph (e)(1)(i) of the final standard and minor editorial changes have been made to clarify that the requirements for protective clothing apply only to those fire brigade members who perform interior structural fire fighting. Additionally, the proposed effective date of July 1, 1980, has been changed to July 1, 1981. The additional time will permit a smoother transition to the use of the new equipment by allowing additional time for purchasing of the equipment.

Paragraph (e)(1)(iii) of the proposal required protective clothing which protects the head, body and extremities, ". . . and consists of at least the following components: foot and leg protection; hand protection; body protection; eye, face and head protection."

While some comments (Ex. 7: 119; 168) stated that this listing of specific components is redundant, OSHA has retained the phrase in paragraph (e)(1)(ii) in the final standard to make the reference to the following provisions of paragraph (e) clearer.

Paragraph (e)(2) of the proposal contained requirements for foot and leg protection. OSHA received several comments (Ex. 7: 139; 195), (Ex. 23: 231) which pertained to the 300 pounds static force penetration resistance of foot protection.

One commenter (Ex. 23: 231) supported the proposed 300 pounds penetration resistance. Another commenter (Ex. 7: 195 p. 1) stated:

> Since a fire fighter dressed in turn out gear is likely to weigh well in excess of 200 pounds, a minimum penetration resistance of 400 pounds should be required instead of 300 pounds as now specified in this paragraph. Recent testing done under contract for NIOSH demonstrated that most of the footwear specimens evaluated could easily surpass the 400 pound minimum.

The reason that OSHA specified 300 pounds penetration resistance in the proposal was to take into account the weight of a fire brigade member (approximately 200 pounds) combined with the weight of the equipment worn and carried (approximately 100 pounds). Specifying this 300 pounds penetration resistance was intended to provide protection for the feet when stepping on nails or other sharp objects. OSHA believes that 300 pounds penetration resistance is adequate as a *minimum* for providing this protection in the absence of injury data which would support a higher value.

Accordingly, the requirements contained in paragraph (e)(2) of the final standard have not been changed from those proposed. The metric equivalent for 300 pounds of static force (1300 N) has been included for informational purposes.

Paragraph (e)(3) contains requirements for body protection. OSHA proposed in this paragraph that fire-resistive coats and trousers be at least equivalent to the requirements contained in the NFPA 1971 standard (1975), "Protective Clothing for

Structural Fire Fighting", with certain permissible variations in those requirements.

All of the comments OSHA received with respect to this paragraph agreed that fire-resistive coats should be at least equivalent to those meeting the NFPA 1971 standard. However several commenters disagreed with the proposed permissible variations from the NFPA 1971 standard.

The first proposed permissible variation from the NFPA 1971 standard was:

> Liner may be detachable but the shell is not permitted to be worn without the liner while performing interior structural fire fighting.

Several commenters (Ex. 7: 45; 93; 161; 175) disagreed with this variation because they believed that if the liner is detachable, there is a possibility that the outer shell would be worn without the liner. For example, one commenter (Ex. 7: 93 pp. 8–9) asserted:

> The probability that an employee will take the time to look for and install a liner which is detached from its shell is minimal. Allowing this variation, therefore, increases the probability of employee injury.

Another commenter (Ex. 7: 161 p. 9) remarked: "If it (liner) is designed to be detachable, the outer shell will be worn without it. This could result in needless injury."

OSHA proposed this variation in order to facilitate cleaning of the fire-resistive coat. However, OSHA agrees with these commenters that allowing the liner to be detachable could result in fire brigade members wearing the outer shell of the fire-resistive coat without the liner. The liner provides a very important function of helping to protect the body from radiant heat, and it is imperative that the liner be attached to the fire-resistive coat when fire brigade members perform interior structural fire fighting.

Therefore, the proposed provision which would have allowed liners to be detachable, has been deleted from this paragraph of the final standard. However, it is permissible to permanently attach the lining to the outer shell material by stitching in one area such as at the neck. Fastener tape or snap fasteners may be used to secure the rest of the lining to the outer shell to facilitate cleaning. Additionally, "permanent lining" does not refer to a winter liner which is a detachable extra lining used to give added protection to the wearer against the effects of cold weather and wind.

The second permissible variation proposed by OSHA would have allowed ventilation openings in the fire-resistive coat in order to achieve increased ventilation of trapped body heat.

Several commenters disagreed with this variation, because they believed that ventilation openings would not significantly enhance the wearer's comfort and might adversely affect the protective capability of the garment. For example, one commenter stated (Ex. 7: 93 p. 9):

> As the protective capability of a garment is significantly reduced in ventilation areas, the size and location of such openings should be limited. Innovations for improved ventilation can be achieved within the NFPA 1971 standard guidelines without compromising the protective capability of turnout apparel.

Another commenter (Ex. 7: 161 p. 9) remarked:

> This exception should be deleted as U.S. Army Natick Lab's studies done on protective clothing have shown that openings that pierce the outer shell and vapor barrier do not aid in ventilation for the wearer's comfort unless such openings are of 50 or 60 percent of the total coat area. Also, openings into the coat can cause an additional safety hazard as they can let in super-heated air and gases.

OSHA did not recieve any information which supported the position that the use of ventilation openings would enhance a wearer's comfort. In view of these factors, OSHA has decided to delete this variation from the final standard.

The third permissible variation proposed by OSHA concerned tearing-strength of the outer shell material of fire-resistive coats. Based on the California Occupational Safety and Health (Cal-OSHA) Standards in effect at the time, OSHA proposed that the tearing-strength be a minimum of eight pounds in any direction. This varies from the NFPA 1971 standard which specifies a minimum of 22 pounds.

The NFPA 1971 standard referenced by OSHA in the proposal specified that tearing-strength be determined by ASTM Method D 2263, which is known as the Trapezoid method. One of the comments OSHA received (Ex. 7: 86) suggested that the Elmendorf method be specified for determining tearing-strength rather than the Trapezoid method. This commenter asserted that the method commonly used in the textile testing facilities is the Elmendorf method rather than the Trapezoid method. The commenter stated in part (Ex. 7: 86 p. 2):

> Specifically, our objection to this section is the designation of a test method not commonly used in textile testing to determine strength. It is necessary to point out that if the method is changed, for example, as we proposed to the Elmendorf method, consideration for redefinition of the value must be made.

OSHA also received contradictory comments with respect to the proposed tearing-strength value of eight pounds. Several commenters (Ex. 7: 45; 93; 153; 161) objected to decreasing the minimum tearing strength value from 22 pounds to eight pounds in any direction (including warp and filling direction). These comments suggested that there is no evidence to indicate that an eight pound tearing-strength would be adequate for fire fighter safety.

Data from a 1972 National Bureau of Standards (NBS) study of a fire fighter turnout coats (NBS Report 10 489) was used as a basis for many of the comments. Data from this NBS report showed that many fabrics can exceed a 30 pound tearing-strength in the warp direction and 10 pounds in the filling direction. Thus, this data has been used as the basis for arguments in favor of higher tearing-strength requirements than that proposed (Ex. 7: 93). However, tears are generally propagated along the weakest direction of a fabric. Therefore, actual fabric performance may be better gauged by the measurements in the filling direction, which is the weakest direction. Using this approach, the 10 pound limit found in the NBS report is much closer to the eight pounds proposed by OSHA than to the NFPA 22 pound limit.

One commenter (Ex. 23: 232) used data from the same NBS report to support the proposed eight pound minimum tearing-strength. This commenter stated that nothing in the NBS report was said about the coats examined being deficient in safety or performance characteristics. This commenter suggested that the data contained in the NBS report provided a valid base for determining minimum acceptable values. This commenter further stated (in attachment p. 2):

> Analysis of the data for new coats would allow setting a minimum strength of 17 lbs. in the warp and 7 lbs. in the filling direction.

In view of the contradictory comments and information received, OSHA included in the June 1, 1979, Hearing Notice (Ex. 21) a request for written comments concerning this issue. OSHA believed that further written comments might assist the the agency in clarifying and resolving this issue.

Additionally, OSHA contracted with Dr. Robert H. Barker, an expert in textile testing, to assist the agency in resolving issues related to fire-resistive coats.

This contract specified that physical test data be developed to characterize the various fabrics and other materials currently in use and accepted by the fire service as adequate for utilization in outer shells of fire-resistive coats which

are to be worn by fire brigade members when performing interior structural fire fighting. Physical properties examined were tearing-strength, flame resistance, and heat resistance. The contract also specified that a comparison be made between the Elmendorf and Trapezoid test methods. Dr. Barker's report is contained in exhibit 78.

A total of 22 samples (12 fabric samples and 10 coat samples) were obtained and evaluated in the laboratory. These samples consisted of as many different materials as possible (both natural fiber and synthetic fiber) which are currently used in turnout coats and which the fire service finds to be acceptable. In addition, samples of used turnout coats were tested so that levels of protection could be evaluated in coats which have been in service for some time but which are still considered acceptable.

Measurements of tearing-strength were made in the weakest direction only. It is interesting to note that of the 12 fabric samples tested, only two met the 22 pound tearing-strength criteria specified in NFPA 1971. Dr Barker stated in his report (Ex. 78: p. 8):

> Consideration of the data in Table 1 leads further to the conclusion that not only are test results rather unpredictable, but there is also a rather wide-spread failure of both the new and used turnout coat fabrics when judged by the 22-pound requirement in the trapezoid test as specified by NFPA 1971. This coupled with the fact that each of the fabric types has a constituency among active fire fighters who consider that these fabrics are not only acceptable but actually preferable for use in turnout coats, leads to the conclusion that the 22 pound requirement is excessively high. If an eight pound requirement based on the Trapezoid test were invoked as proposed by OSHA, it would appear that less than 5 percent of the current fabric mix would be removed from use in turnout coats for industrial fire brigades. It would also appear that the minimum acceptable value could be raised slightly above eight pounds without seriously restricting the number of fabrics available for use in turnout coats, but there is no evidence that such an increase would produce any significant benefit in terms of increased safety levels.

Dr. Barker's report concluded that the 22 pound requirement (Trapezoid method) incorporated in NFPA 1971 is excessive, and the value of eight pounds (Trapezoid method) proposed by OSHA appears to be more reasonable.

Additionally, when comparing the Elmendorf test method with the Trapezoid test method, Dr. Barker found little or no correlation between the values obtained from the two test methods (Ex. 78 p. 7). It has also been asserted (Ex. 23: 238 pp. 2–3) that test reproducibility is best afforded by the Trapezoid method. Therefore, OSHA does not belive it would be meaningful to specify the Elmendorf method instead of, or in addition to, the Trapezoid method for determining tearing-strength.

After consideration of all of the comments, test data, and information received, OSHA has concluded that the minimum tearing-strength, as determined by the Trapezoid method, should be a minimum of eight pounds in any direction since this is the value which will provide the minimum level of protection needed by the wearer.

The results of Dr. Barker's report were helpful to OSHA in reviewing and evaluating the record, and reinforced the choice of the eight pound value proposed by OSHA. The final determination of eight pounds tearing-strength is supported both by Dr. Barker's report and by the additional information submitted to the record, as well as by the data available to OSHA at the time of the proposal.

It was brought to the attention of OSHA (Ex. 7: 86), (Ex. 23: 232), (Ex. 78) that the Trapezoid method, ASTM Method D2263, is no longer contained in the "Annual Book of ASTM Standards." However, the Trapezoid method is contained in Federal Test Method Standard 191, Method 5136, "Strength of Cloth, Tearing; Trapezoid Method." Instead of incorporating Federal Test Method Standard 191, Method 5136 by reference, OSHA has decided to add a new appendix (Appendix E) to contain test methods required in paragraph (e) of this section.

Accordingly, this paragraph of the final standard will permit a variation from the NFPA 1971 standard with respect to tearing-strength. This variation states:

> (A) Tearing-strength of the outer shell shall be a minimum of eight pounds in any direction when tested in accordance with paragraph (2) of Appendix E.

The fourth proposed variation from the NFPA 1971 standard concerned criteria for flame resistance. The criteria proposed by OSHA was based on the Cal/OSHA standards in effect at the time. Specifically, OSHA proposed that criteria for flame resistance be:

> Maximum after-flame—2.0 seconds.
> Maximum after-glow—4.0 seconds.
> Average char length—6.0 inches.

Criteria for flame resistance specified in the NFPA 1971 (1975) standard is:

> Char length (max.)—4.0 inches.
> After-flame (max.)—2.0 seconds.

One commenter (Ex. 7: 177), in support of the 6-inch average char length, stated that the difference between the 4-inch maximum char length and the 6-inch average char length means little in terms of the thermal protective characteristics of the fabric. This commenter also stated that a 4-inch maximum char length can be easily attained, but would require substantially more chemical treatment and production control to achieve, and such measures would not really provide any significant added protection.

There were other commenters (Ex. 7: 45; 93; 161) who objected to this variation. For example, one commenter (Ex. 7: 93 p.11) remarked:

> We see no basis for these changes from the current NFPA specifications and, furthermore, do not understand why the NFPA values were adopted in the proposed flame resistance requirements for gloves but not for outer shells. The NFPA specification for a 4-inch average char length was based on NBS recommendations. This value should be adopted for both outer shells and gloves.

The flame resistance tests performed by Dr. Barker (Ex. 78) found that all of the turnout coat fabrics, except the untreated cottons, offered good flame resistance with short char lengths. All of the fabrics were within the 4-inch maximum char length specified in NFPA 1971. Dr. Barker stated that the difference in level of protection between fabrics having char lengths of 2, 4, and 6-inches is negligible. The significant property is whether or not the fabric is self-extinguishing when tested under these conditions. The only significant safety benefit from a particularly short char length is the added confidence that removal of chemical flame retardants by wear, laundering, etc., will be less likely to convert the fabric into one which is no longer self-extinguishing.

Dr. Barker's report (Ex. 78 p.17) concluded that:

> A maximum allowable value of four inches for the char length measured by Method 5903 of Federal Test Standard 191 would appear to be reasonable on the basis of the currently used fabrics. No correlation between char length and safety exists except perhaps for treated fabrics where short char lengths indicate the presence of excess flame retarding chemicals which could offset losses which might occur during wear or laundry. However, it would appear that the four inch char length retains a significant safety margin over fabrics which are not self-extinguishing, and it is recommended that the four inch requirement from NFPA 1971 be retained in the proposed OSHA standard. The use of a six inch maximum would also be acceptable if coupled with a specification of flame retardant durability.

In light of the information contained in the record, OSHA finds it appropriate to adopt a 4-inch maximum char length.

The flame resistance criteria proposed by OSHA also specified a maximum after-glow time of four seconds. This

criteria was based on the Cal/OSHA standards in effect at the time. With respect to the proposed criteria for after-glow, one commenter (Ex. 7: 93 p.11) asserted:

Neither the NBS recommendations nor the NFPA standard have requirements for after-glow time. After-glow test results are often misleading and have little meaning in predicting hazards.

OSHA agrees with this comment to the extent that char length and after-flame criteria are more meaningful than after-glow criteria for determining the level of flame resistance afforded by a garment. Since none of the comments received supported the proposed criteria for after-glow, OSHA has decided to delete the after-glow criteria from the final standard.

Accordingly, the proposed variations from the NFPA 1971 standard concerning criteria for flame resistance have been deleted from this paragraph of the final standard. Criteria for flame resistance will be the same as specified in NFPA 1971 as follows:

Char length, 4.0 inches (max.).
After-flame time, 2.0 seconds (max.).

The last proposed variation from the NFPA 1971 standard concerned heat resistance. The NFPA 1971 standard does not permit charring of the outer shell material when the material is tested by placing it in a forced air laboratory oven at a temperature of 500°F for a period of five minutes.

However, some materials may start to discolor when subjected to this test. This discoloration may or may not be actual charring. The intent of the proposed variation from the NFPA 1971 standard was to permit discoloration or charring as long as the outer shell material retained its protective characteristics.

Therefore, OSHA proposed that the outer shell and lining may char or discolor, but must retain their heat resistive qualities. OSHA only intended the variation to apply to the outer shell and not to the lining because it is the outer shell which will be exposed to flame contact. The word "lining" was inadvertently contained in the proposed paragraph. Accordingly, OSHA has deleted the word "lining" from this paragraph of the final standard to correct this mistake.

Several commenters objected to this variation concerning heat resistance criteria for the outer shell (Ex. 7: 45; 86; 93; 161; 182). They especially disliked the phrase, "must retain heat resistance." These commenters stated that the term "heat resistance" was undefined and left unclear what constituted heat resistance.

OSHA agrees that the term "heat resistance" is vague unless definitive criteria are specified to explain its meaning.

OSHA received comments (Ex. 7: 93; 182) which suggested test criteria for determining heat resistance. In addition, OSHA's contract with Dr. Barker specified that a study be conducted of the "heat resistant" properties of the outer shell material of fire-resistive coats after several cycles of testing. Dr. Barker concluded (Ex. 78 p. 18):

* * * inclusion of heat resistance criteria would be premature at this time. Instead, it is recommended that efforts be made to institute a systematic approach to the development of heat resistance test methodology which could then be used as the basis for rational heat resistance criteria.

In view of the lack of supportive information and test data, OSHA agrees that the inclusion of heat resistance criteria would be unwise at this time. Since there is no acceptable test methodology for determining heat resistance criteria, the final standard requires that the outer shell material of fire-resistive coats retain its protective characteristics, including its flame resistance properties, when subjected to the "oven test" as specified in NFPA 1971.

Accordingly, the proposed language has been revised in this paragraph of the final standard to read as follows:

(B) The outer shell may discolor but shall not separate or melt when placed in a forced air laboratory oven at a temperature of 500°F (260°C) for a period of five minutes. After cooling to ambient temperature and using the test method specified in paragraph (3) of Appendix E, char length shall not exceed 4.0 inches (10.2 cm) and after-flame shall not exceed 2.0 seconds.

Paragraph (e)(4) contains requirements for hand protection. Paragraph (e)(4)(i) of the proposal specified that protective gloves or glove systems must allow dexterity of hand movement and sense of feel for objects.

Several commenters (Ex. 7: 22; 89; 157) stated that the criteria were subjective and qualitative, and the amount of protection was not defined.

OSHA wanted to assure that the protective gloves or glove systems provide the necessary flexibility to grasp objects. However, OSHA agrees that the proposed criteria were not sufficient to be evaluated in a consistent manner. Although dexterity is desirable, the most important attributes of gloves are protection against heat penetration, cut, and puncture.

Accordingly, the appendix to this section recommends that protective gloves or glove systems provide dexterity. However, the proposed mandatory requirement for dexterity has been deleted from this paragraph of the final standard.

Paragraph (e)(4)(ii) of the proposal required exterior material of protective gloves to provide resistance against abrasion, puncture, and absorption of liquids, but did not specify test methods to determine these attributes. Paragraph (e)(4)(iv) of the proposal specified criteria for thermal insulation of protective gloves, to be determined by using the test method contained in the NIOSH publication, "The Development of Criteria for Fire Fighters' Gloves; Vol. II: Glove Criteria and Test Methods." This NIOSH publication also contains test methods for cut and puncture criteria. Several commenters (Ex. 7: 22; 89; 157; 163) pointed out that the criteria for abrasion, puncture, and absorption of liquids are subjective unless test methods are specified for determining these attributes. OSHA agrees that these attributes cannot be quantitatively evaluated unless test methods are specified.

As stated above, it is the position of OSHA that the most important characteristics of protective gloves are protection against heat penetration, cut, and puncture. Therefore, OSHA has decided to specify criteria and test methods for protection against these hazards by modifying the proposed language, and combining proposed paragraphs (e)(4)(ii) and (e)(4)(iv) as paragraph (e)(4)(i) of the final standard. Accordingly, paragraph (e)(4)(i) of the final standard specifies criteria and refers to test methods for cut, puncture, and heat penetration that are contained in the above NIOSH publication. In an effort to reduce incorporation by reference as much as possible, final paragraph (e)(4)(i) contains the criteria for cut, puncture, and heat penetration and incorporates by reference only the test methods contained in the NIOSH publication. The test methods are being incorporated by reference in the final standard because of their detail and length.

Paragraph (e)(4)(iii) of the proposal specified fire-resistance criteria for the exterior material of protective gloves. OSHA did not receive any substantive comments with respect to this proposed paragraph. Accordingly, this paragraph is carried forward as paragraph (e)(4)(ii) of the final standard.

Paragraph (e)(4)(v) of the proposal specified that when design of the fire-resistive coat does not otherwise provide protection for the wrists, protective gloves shall have wristlets of at least 4.0 inches (10.2 cm) in length to protect the wrist area when the arms are extended upward and outward from the

body. OSHA did not receive any comments pertaining to this proposed paragraph. Therefore, this paragraph remains the same as proposed and becomes paragraph (e)(4)(iii) of the final standard.

Paragraph (e)(5) of the proposal contained requirements for head, eye, and face protection.

Paragraph (e)(5)(i) of the proposal specified that head protective devices must meet the requirements contained in the National Fire Prevention and Control Administration (NFPCA) publication, "Model Performance Criteria for Structural Fire Fighters' Helmets."

Several commenters (Ex. 7: 66; 89; 160; 161; 174), (Ex. 23: 203; 237) disagreed with referencing the NFPCA publication. These commenters suggested, instead, that OSHA reference the new NFPA standard for helmets, NFPA 1972 (1979), "Structural Fire Fighters' Helmets." For example, one commenter (Ex. 7: 161 p. 10) remarked.

> NFPA 1972 updates the NFPCA criteria and will require a helmet design that offers more protection than one produced in accordance with the NFPCA criteria. In view of this, we recommend that OSHA reference NFPA 1972 instead of the NFPCA criteria. It is a superior technical standard.

OSHA agrees that the criteria contained in the NFPA 1972 standard goes beyond that criteria proposed by OSHA. However, NFPA 1972 is a new standard, and to date OSHA is unaware of any helmets that have been tested and shown to meet its provisions.

Accordingly, this paragraph of the final standard references only the criteria contained in the NFPCA publication. However, when helmets become available that have been tested to meet the more stringent criteria of NFPA 1972, such helmets will obviously be acceptable as meeting OSHA requirements.

Paragraph (e)(5)(ii) of the final standard requires protective eye and face devices to be used by fire brigade members when performing operations where the hazards of flying or falling materials, which may cause eye and face injuries, are present.

Paragraph (e)(5)(iii) of the proposal accepted full facepieces of breathing apparatus as meeting the eye and face protection requirements if the full facepieces comply with the requirements of § 1910.134 and paragraph (f) of this section. OSHA did not receive any comments with respect to this paragraph. However, since paragraph (f)(1)(ii) of the final standard recognizes that self-contained breathing apparatus can be equipped with a full facepiece or an acceptable helmet or hood configuration, paragraph (e)(5)(iii) of the final standard has been revised by adding a reference to helmets or hoods.

Respiratory protective devices: Paragraph (f). This paragraph contains requirements for respiratory protective devices worn by fire brigade members. Paragraph (f)(1) contains general requirements which apply to all respirators. Paragraph (f)(2) contains requirements for positive-pressure respirators which apply only to those fire brigade members who perform interior structural fire fighting.

Paragraph (f)(1)(i) of the proposal specified that respiratory protective devices must meet the requirements contained in § 1910.134, the general industry requirements for respiratory protection, and the requirements of this paragraph.

One commenter (Ex. 7: 89) suggested that the following phrase be added to the proposed requirement after the word "paragraph": "and be certified under 30 CFR Part 11." OSHA agrees with this comment and believes it will clarify OSHA's intent with respect to the kinds of respirators which will be acceptable as meeting this paragraph. When OSHA uses the term "approved," it means certified under 30 CFR Part 11. Therefore, this paragraph of the final standard has been modified by adding the phrase, "and are certified under 30 CFR Part 11."

Paragraph (f)(1)(ii) of the proposal specified when self-contained breathing apparatus with full-facepiece was to be worn by fire brigade members.

OSHA received comments (Ex. 7: 95; 145) which stated that if OSHA specifies that self-contained breathing apparatus must be worn with full-facepiece, that the term "full-facepiece" could preclude the use of acceptable respirator configurations such as those which use an enclosed helmet or hood arrangement.

OSHA did not intend to exclude the use of these acceptable configurations. Therefore, this paragraph of the final standard has been modified to recognize that self-contained breathing apparatus can be worn with full-facepiece or with approved enclosed helmet or hood configuration.

OSHA also received comments (Ex. 7: 27; 45; 153; 161; 176) which questioned the wording of this paragraph. The proposal required self-contained breathing apparatus to be worn by brigade members while working inside buildings or confined spaces where there is dense smoke or an oxygen deficiency. The proposal also required that such apparatus be worn during emergency situations involving toxic substances.

The commenters were concerned that the proposed requirement was not sufficiently protective. They stated that brigade members would not be able to determine when toxic products of combustion were present, and therefore, self-contained breathing apparatus should be worn at all times during an emergency, including mop-up and overhaul operations. For example, one commenter (Ex. 7: 27 p. 1) asserted:

> We do not believe this regulation is strict enough as there is no way to determine whether oxygen deficiency or toxic materials are present during the intial entry or whether the situation could deteriorate to such conditions. We recommend a mandatory mask rule requiring the use of self-contained breathing apparatus during actual fire fighting operations and during overhaul operations in interior structures.

Another commenter (Ex. 7: 161 p. 10) stated:

> This section needs to be strengthened to require brigade members to wear self-contained breathing apparatus whenever products of combustion are present in the work area, including overhaul and mop-up operations; whenever working in any hazardous or toxic atmospheres, such as during chemical spills or radiation situations; or whenever products of combustion or toxic atmospheres are *likely* to be encountered. Terms such as "dense smoke" are vague and open to numerous interpretations. Brigade members will not be able to determine when oxygen deficiencies are present or when toxic levels in the atmosphere are dangerous. Therefore, brigade members must don self-contained breathing apparatus whenever products of combustion or hazardous/toxic atmospheres in whatever densities or volume, are encountered or are likely to be encountered.

OSHA agrees that the words "dense smoke" are vague. OSHA also agrees that self-contained breathing apparatus should be worn whenever toxic products of combustion or an oxygen deficiency may be present. This includes mop-up and overhaul operations where such environments are present. Therefore, this paragraph of the final standard has been modified to read as follows:

> (ii) Approved self-contained breathing apparatus with full-facepiece, or with approved enclosed helmet or hood configuration, shall be worn by fire brigade members while working inside buildings or confined spaces where toxic products of combustion or an oxygen deficiency may be present. Such apparatus shall also be worn during emergency situations involving toxic substances.

Paragraph (f)(1)(iii) of the proposal concerned permissible accessories to self-contained breathing apparatus. These permissible accessories included buddy-breathing devices and quick-disconnect valves. A buddy-breathing

device is an accessory to self-contained breathing apparatus which permits a second person to share the same air supply as that of the wearer of the apparatus. These devices should only be used for emergency escape situations. A quick disconnect valve is a device which starts the flow of air by insertion of the hose (which leads from the facepiece) into the regulator of a self-contained breathing apparatus, and stops the flow of air by disconnection of the hose from the regulator.

OSHA proposed to allow the use of the buddy-breathing device so that an alternative air supply would be available for an endangered fire brigade member to make an emergency escape.

There have been instances reported where a fire fighter's air supply has been depleted because of being pinned or trapped, or as a result of a malfunction of the apparatus. A buddy-breathing device incorporated into the breathing apparatus units would allow for two facepiece hose connections. With this type of device, both facepieces are connected into a common air supply during an emergency escape situation and both fire brigade members would be benefitted by the available air. This device would avoid the need to pass the facepiece between two fire brigade members which, OSHA believes, is a less safe procedure. Some of the comments OSHA received (Ex. 7: 77; 81; 133) supported the proposed provision which would allow the use of a buddy-breathing device. For example, one commenter (Ex. 7: 81) remarked:

> The inclusion of a buddy-breathing device as ancillary equipment on breathing apparatus is an innovation that is long overdue. In rare, but not uncommon, circumstances of a fire fighter's air supply running out, the attitude has been to put your facepiece hose under your armpit and take your beating like a man. This is unnecessary, sometimes fatal, and with the availability of today's technology, it is shameful. I heartily endorse the concept of buddy-breathing devices on SCBA.

One commenter (Ex. 7: 27 p. 2), who disagreed with OSHA in permitting the use of a buddy-breathing device, discussed the results of a series of tests which were performed to determine breathing resistance or restricted air flow when a particular buddy-breathing device was used with four different makes of positive-pressure breathing apparatus. (A "positive-pressure" breathing apparatus is a breathing apparatus in which the pressure inside the full-facepiece is positive in relation to the immediate environment during inhalation and exhalation. Any facepiece leakage will be outward, thus providing protection to the wearer against inward leakage of toxic materials. "Negative-pressure" breathing apparatus (demand type breathing apparatus) is a breathing apparatus in which the pressure inside the full-facepiece is negative during the inhalation cycle.) The commenter stated that when the buddy-breathing device was used with positive-pressure breathing apparatus, all four of the respirators went to negative-pressure on inhalation. This means, of course, that protection against inward facepiece leakage would be lost due to the pressure inside of the facepiece becoming negative.

OSHA emphasizes that not all buddy-breathing devices will be permitted as accessories under paragraph (f)(1)(iii). It is clear that a buddy-breathing device such as the one tested would not meet the requirements of this paragraph because accessories which cause damage to the breathing apparatus, or restrict the air flow of the breathing apparatus, or obstruct the normal operation of the breathing apparatus when being used only by the wearer, are not permitted.

OSHA proposed to allow the use of the second accessory, the quick-disconnect valve, because this device is particularly useful for positive-pressure SCBA which do not have the capability of being switched from the demand (negative-pressure mode) to the positive-pressure mode. A quick-disconnect valve starts or stops the flow of air by insertion of the hose into the regulator; thus, it can save valuable air for positive-pressure SCBA.

One commenter (Ex. 7: 80) explained the value of a quick-disconnect valve for conserving air when it is used on positive-pressure breathing apparatus. This commenter stated that the main line valve or regulator valve is kept in the off position when the apparatus is charged, and then opened after placing the face mask on the wearer's face and before actual fire fighting operations begin. The commenter further remarked that rather than closing and opening valves under stress and tension of emergency operations, a "Schrader" or quick-disconnect valve could be used to achieve the same result.

Several commenters (Ex. 7: 27; 91; 97; 105; 176) disagreed with OSHA's proposed provision which would allow the use of either buddy-breathing devices or quick-disconnect valves on breathing apparatus. The main concern of these commenters was that these accessories would not be NIOSH/MSHA approved. For example, one commenter (Ex. 7: 27 p. 1) remarked:

> This paragraph permits the use of a buddy-breathing device or a quick-disconnect valve without NIOSH/MSHA approval. We do not believe the approval system should be by-passed in permitting these changes to be made.

Another commenter (Ex. 7: 176 pp. 5–6) added:

> The IAFF recognizes the value of self-contained breathing apparatus equipped with a buddy-breathing device or a quick-disconnect valve during emergency and escape situations. However, this section of the standard is allowing useage (sic) of these devices without NIOSH approval. We oppose the by-passing of the NIOSH approval system.

OSHA realizes that NIOSH/MSHA approval does not extend to individual components of SCBA. NIOSH/MSHA have been requested to change their certification criteria with respect to its approval of individual components which would be permissible for use on SCBA. These requests for the revision of the NIOSH/MSHA certification criteria were discussed at a public meeting concerning respirator testing and approval which was conducted by NIOSH/MSHA on November 29–December 1, 1977, as announced in a Federal Register Notice dated October 28, 1977 (Ex. 8: 138). If the certification process were changed in this manner, breathing apparatus could be provided with approved accessories which would enhance protection for the fire fighter.

As of this time, NIOSH/MSHA have not proposed revisions to their respirator certification criteria which would permit the certification of accessories such as buddy-breathing devices and quick-disconnect valves. Nonetheless, OSHA is allowing employers to deviate from the NIOSH/MSHA certification criteria because OSHA believes that these accessories are important enough to the life safety of fire brigade members that they should be allowed on SCBA as long as such accessories do not cause damage to the breathing apparatus, restrict the air flow of the breathing apparatus, or obstruct the normal operation of the breathing apparatus.

Accordingly, paragraph (f)(1)(iii) of the final standard remains essentially the same as proposed. OSHA would like to make it clear that it is *acceptable* for SCBA to be equipped with these accessories as long as they are in accordance with this paragraph. OSHA is *not* mandating that SCBA be equipped with these accessories.

OSHA proposed in paragraph (f)(1)(iv) to allow the interchangeability of compatible air cylinders. Most of the comments OSHA received supported this provision (Ex. 7: 6; 27; 95; 159; 180).

For example, one commenter (Ex. 7: 27 p. 2) remarked:

> We heartily endorse the concept of interchanging different makes of air cylinders. We have tested self-contained breathing apparatus with 2216 psi air cylinders on our breathing machine set in accordance with the NIOSH test criteria and found no changes in operation when Scott, MSA, and Survivair cylinders were interchanged.

Two commenters (Ex. 7: 91; 145) disagreed with allowing the interchangeability of air cylinders because it would void NIOSH/MSHA approval. This is because it is the policy of NIOSH/MSHA to approve breathing apparatus as one entire unit and not to approve components or subassemblies such as air cylinders. Therefore, NIOSH/MSHA approval would be voided if the air cylinder from one manufacturer were used with breathing apparatus by a different manufacturer.

Actually, fire departments have, by necessity, interchanged cylinders (which were compatible with their own apparatus) for many years. Fire departments and OSHA have requested NIOSH/MSHA to recognize the interchangeability of Department of Transportation (DOT) compressed air cylinder without voiding the approval of the breathing apparatus since all approved compressed air cylinders must meet the same basic criteria. However, NIOSH/MSHA, as of this time, have not changed the certification criteria to recognize the interchangeability of air cylinders.

OSHA believes that the interchangeability of air cylinders is important enough to the life safety of fire brigade members that it should be permitted.

Additionally, one commenter (Ex. 7: 145) suggested that the word "capacity" would be more meaningful than the word "size" when describing air cylinders. OSHA agrees with this commenter because it is a more accurate description of a cylinder's rating.

Therefore, this paragraph of the final standard permits the interchangeability of air cylinders when such cylinders are of the same capacity and pressure rating.

Paragraph (f)(1)(v) of the proposal required SCBA to have a minimum service life rating of 30 minutes. All of the comments OSHA received supported this proposed requirement. However, one commenter (Ex. 7: 145) suggested that it be clarified that this requirement does not apply to escape self-contained breathing apparatus (ESCBA). The ESCBA is a short-duration respiratory protective device which is approved for only emergency escape purposes. An ESCBA is an alternative to a buddy-breathing device for providing a secondary air supply to the wearer only for emergency escape purposes. OSHA agrees with this commenter that the requirement concerning the minimum service life rating for SCBA should not apply to ESCBA; OSHA did not intend for the proposed requirement to apply to ESCBA.

Accordingly, an exception for ESCBA has been included in the final standard.

Paragraph (f)(1)(vi) of the proposal concerned the cleaning and recharging of SCBA. Although this subject matter is already addressed in § 1910.134 which is referenced in this section, OSHA included it in the proposal for emphasis. Based on the comments submitted to the record that this repetition is unnecessary, OSHA has decided to delete this paragraph from the final standard.

Paragraph (f)(1)(vii) of the proposal required that SCBA be provided with an indicator which automatically sounds an audible alarm when the remaining service life of the apparatus is reduced to within a range of 20 to 24 percent of its rated service time.

The only comments OSHA received with respect to this paragraph (Ex. 7: 89; 91; 145), now paragraph (f)(1)(vi) of the final standard, correctly noted that the paragraph contained a typographical error; "24 percent" should have read "25 percent."

Accordingly, this typographical error has been corrected in this paragraph of the final standard.

Paragraph (f)(2)(i) of the proposal required fire brigade members to wear positive-pressure breathing apparatus when performing interior structural fire fighting.

Since this type of breathing apparatus maintains a positive-pressure inside the facepiece, it affords excellent protection against inward facepiece leakage. This is because any leakage will be outward from the facepiece, due to the positive-pressure, rather than inward into the facepiece. Several individuals and organizations (Ex. 8: 131; 123; 241; 243; 247) have described the superior protection factors afforded by the positive-pressure apparatus over the conventional negative-pressure (demand) apparatus. This superior protection against facepiece leakage is necessary because of the many different kinds of materials in use today which result in toxic smoke and gases.

Fire brigade members are being exposed to unknown concentrations of contaminants when performing interior structural fire fighting. Fire brigade members do not normally know what contaminants they are encountering, let alone the exact concentrations of the materials which may be present. Because of this uncertainty, fire brigade members must be provided with the type of respirator which affords the best protection against the unknown environments that may be encountered.

This is the reason OSHA proposed that only positive-pressure breathing apparatus be worn by fire brigade members when performing interior structural fire fighting. Most of the comments OSHA received supported this concept (Ex. 7: 107; 159; 171; 176; 179; 180), (Ex. 23: 204; 205; 210; 213; 216; 226; 227; 228; 231), (Ex. 90), (Ex. 99).

OSHA also received comments (Ex. 7: 147), (Ex. 23: 212; 214) which remarked that any SCBA (negative-pressure or positive-pressure) should be acceptable as long as it could achieve a specified protection factor. Other commenters (Ex. 7: 61; 172), (Ex. 23: 219), (Ex. 82) stated that they believed the *open-circuit* positive-pressure breathing apparatus was the safest type for interior structural fire fighting. However, they objected to any provision which would also require *closed-circuit* breathing apparatus to be of the positive-pressure type. (A "closed-circuit" SCBA is a respirator in which the air is rebreathed after the exhaled carbon dioxide has been removed and the oxygen content is restored by a compressed or liquid oxygen source or by an oxygen-generating solid. These respirators are used primarily for situations requiring a duration of 1 to 4 hours. All closed-circuit SCBA approved for 2 hours or more duration are of the negative-pressure type. An "open-circuit" SCBA is a respirator which exhausts the exhaled air to the atmosphere instead of recirculating it. These respirators are used primarily for situations requiring a duration of less than 1 hour; most open-circuit SCBA have a rated service life of 30 minutes.) Based on information submitted to the record (Ex. 7: 61), (Ex. 39), these commenters contended that certain closed-circuit negative-pressure breathing apparatus could provide equivalent protection to that afforded by open-circuit positive-pressure breathing apparatus. Two of these commenters (Ex. 7: 61; 172) also requested a hearing on the issue of whether positive-pressure breathing apparatus should be the only type allowed for interior structural fire fighting. Accordingly, OSHA included this issue as issue 1 of the June 1, 1979, Hearing Notice (Ex. 22).

The hearing notice invited information and testimony on the following aspects of this issue:

a. Whether positive-pressure breathing apparatus should be the only acceptable respirator for interior structural fire fighting?

b. What protection factor should be provided by respirators to be used for interior structural fire fighting? How should it be measured?

Testimony presented at the hearing overwhelmingly supported the use of positive-pressure *open-circuit* breathing apparatus for interior structural fire fighting (Tr. 38–42, 94, 297, 405, 435, 606, 618, 620, 745, 747, 756, 758, 763, 766, 770, 772–776). There was also testimony and information submitted to the record which identified the following reasons why *closed-circuit* breathing apparatus should not be required to be of the positive-pressure type for interior structural fire fighting. First, there is a need for long-duration breathing apparatus (Ex. 82) but there are no positive-pressure breathing apparatus (open-circuit or closed-circuit) approved for more than 2 hours duration. There are breathing apparatus approved for more than 2 hours duration; however, all of these are negative-pressure types. Therefore, a requirement which would mandate the use of positive-pressure breathing apparatus would preclude the use of the only approved longer-duration breathing apparatus available.

Second, it was contended that certain negative-pressure closed-circuit breathing apparatus could achieve a protection factor equal to that of positive-pressure open-circuit breathing apparatus (Ex. 7: 61), (Ex. 39), (Tr. 202–205).

Third, it was contended that a possible hazard may exist with closed-circuit positive-pressure breathing apparatus (Tr. 200). At the Washington, D.C. hearing, a movie presentation by the Draegerwerk Company demonstrated the possible ignition of materials exposed to oxygen-enriched breathing air leaking from a positive-pressure closed-circuit breathing apparatus. Although testimony and cross-examination at the hearings did not verify any case where this occurred during an acutal fire situation, OSHA is concerned that such an occurrence is possible. Accordingly, in a letter dated September 28, 1979, OSHA officially requested NIOSH to study this possible problem and to determine if such a problem may exist with positive-pressure closed-circuit breathing apparatus.

After considering all of the information, testimony, and comments received, OSHA has concluded that as a general rule, positive-pressure breathing apparatus must be worn during interior structural fire fighting because it affords the best protection against toxic products of combustion. Therefore, paragraph (f)(2)(i) of the final standard remains the same as proposed except the proposed effective date of July 1, 1980, has been changed to July 1, 1981. The additional time will permit a smoother transition to the new equipment by allowing more time for purchase of the equipment. Additionally, OSHA recognizes that there are special instances that require the use of negative-pressure breathing apparatus which are able to provide durations that are longer than those provided by present positive-pressure breathing apparatus. Therefore, OSHA has decided to permit the use of longer-duration negative-pressure breathing apparatus under certain conditions. This will be further explained in the discussion pertaining to new paragraph (f)(2)(iii) which has been added to the final standard.

Paragraph (f)(2)(ii) of the proposal permitted the use of a combination type SCBA where the breathing apparatus can be switched from a demand to a positive-pressure mode as long as the breathing apparatus is operated in the positive-pressure mode during interior structural fire fighting. OSHA received comments which supported this concept (Ex. 7: 147; 159; 180). However, two commenters (Ex. 7: 96; 161) disagreed with this proposed provision because they believed that only positive-pressure apparatus should be used during interior structural fire fighting and that permitting a selector switch would provide an opportunity for the apparatus to be switched to the demand mode during interior structural fire fighting.

Even though OSHA agrees with these commenters that only positive-pressure breathing apparatus should be worn during interior structural fire fighting, permitting the use of a selector switch will enhance the flexibility of the breathing apparatus to conserve air by having the breathing apparatus in the demand mode during other than interior structural fire fighting operations. With a selector switch a fire brigade member can conserve air by donning the breathing apparatus without the facepiece in place and turning on the air supply before reaching a hazardous environment. With the apparatus switched to the demand mode, there will be no loss of air. In the absence of a selector switch, the fire brigade member would have to turn off the air supply to the facepiece or use a quick-disconnect valve in order to conserve air. A quick-disconnect valve would achieve the same flexibility as a selector switch for those breathing apparatus that are only positive-pressure.

Therefore, it is the position of OSHA that a selector switch should be permitted on breathing apparatus. However, the breathing apparatus must be in the positive-pressure mode during interior structural fire fighting.

One commenter (Ex 7: 91) remarked that the term "combination" type is not consistent with 30 CFR Part 11. OSHA agrees that this term is not contained in 30 CFR Part 11, and that it would be inappropriate for the final standard to contain a term which is not commonly used.

Accordingly, paragraph (f)(2)(ii) of the final standard remains the same as proposed except the term "combination type" has been deleted.

Paragraph (f)(2)(iii) of the proposal required that, effective July 1, 1985, new positive-pressure breathing apparatus must be capable of performing in termperatures down to −20° F without malfunction or loss of respiratory protection to the wearer for the duration of the equipment.

Several commenters (Ex. 7: 3; 6; 27; 95; 150; 176; 180) supported both high and low temperature criteria for breathing apparatus. However, there were other commenters (Ex. 7: 91; 145; 148; 160; 179) who disagreed with OSHA specifying respirator criteria for low temperature extremes because of the following reasons.

First, specifying the low temperature criteria of −20°F may prohibit the use of certain long-duration closed-circuit breathing apparatus.

Second, the specified temperature of −20°F may not be protective enough or may be overly conservative, depending upon local climatic conditions. Temperature criteria should be appropriate for the area in which the apparatus is being used.

Third, NIOSH, rather than OSHA, should develop criteria for temperature extremes in its certification process of breathing apparatus.

OSHA believes there are several problem areas in which research is needed with respect to self-contained breathing apparatus. One of these problem areas is the identification of appropriate criteria for temperature extremes for use in evaluating self-contained breathing apparatus. Additionally, OSHA agrees that such criteria should be developed by NIOSH, rather than OSHA.

Therefore, OSHA has requested NIOSH to develop criteria for these major problem areas, including criteria for temperature extremes, and that such criteria be included in any revision of 30 CFR Part 11.

OSHA has decided not to address the issue concerning criteria for temperature

extremes until such criteria are developed by NIOSH since it would be inappropriate at this time and unsupported by the record. Accordingly, proposed paragraph (f)(2)(iii) has been deleted from the final standard.

As noted above, although OSHA is mandating the use of positive-pressure breathing apparatus for interior structural fire fighting, OSHA realizes that there are no approved long-duration positive-pressure breathing apparatus for use during special fire fighting situations. To date, only negative-pressure breathing apparatus have a rated service life of more than 2 hours. Therefore, OSHA has decided to permit the use of long-duration negative-pressure breathing apparatus for interior structural fire fighting under certain limited conditions.

Negative-pressure breathing apparatus will be permitted for only those situations in which the employer demonstrates that the use of long-duration apparatus is necessary, such as in tunnels and subway systems. Such breathing apparatus must have a rated service life of more than 2 hours and be able to achieve a protection factor of 5,000 or greater as determined by an acceptable quantitative fit test performed on each individual. Such negative-pressure breathing apparatus will continue to be acceptable for a maximum of 18 months after a positive-pressure apparatus with the same or longer rated service life is certified by NIOSH/MSHA. After this 18 month phase-in period, all self-contained breathing apparatus used for these long-duration situations will have to be of the positive-pressure type.

Those elements which should be included in an acceptable quantitative fit test are described in the appendix to this section. The elements identified in the appendix to this section are not meant to be a comprehensive, technical description of a quantitative fit test protocol, but do include those elements which are acceptable for determining protection factors. The procedures used by the employer for a quantitative fit test are required to be available for inspection by the Assistant Secretary or authorized representative.

Organizations such as Los Alamos Scientific Laboratory, Lawrence Livermore Laboratory, NIOSH, and American National Standards Institute (ANSI) are excellent sources for additional information concerning quantitative fit testing.

OSHA decided to specify a minimum protection factor of 5,000 because this value was recommended in testimony (Tr. 206), and a protection factor of 5,000 is the lowest value a positive-pressure breathing apparatus achieved in a number of fit testing programs (Ex. 15). OSHA believes that negative-pressure breathing apparatus should be able to achieve a protection factor at least equal to the lowest value a positive-pressure breathing apparatus can achieve. This protection factor of 5,000 represents the minimum acceptable protection to be afforded by breathing apparatus used for interior structural fire fighting.

Accordingly, paragraph (f)(2)(iii) of the final standard will permit the use of negative-pressure self-contained breathing apparatus, having a rated service life of more than 2 hours and a minimum protection factor of 5,000 for only those situations which require long-duration apparatus.

Test methods: Appendix E. Paragraph (e) of the proposal contained criteria for protective clothing which were to be determined by using specified test methods. The proposal incorporated the specified test methods by reference. OSHA has decided that it is appropriate to include several of the specified test methods as an appendix instead of incorporating them by reference. By including these test methods in Appendix E, the employer will not have to obtain a copy of these referenced test methods.

Therefore, Appendix E contains the following test methods: paragraph (1)—the puncture resistance test method for foot protection; paragraph (2)—the Trapezoid test method for determining the strength of cloth by tearing; and paragraph (3)—the test method for determining the flame resistance of cloth (vertical).

The use of the test methods in Appendix E is mandatory to determine if protective clothing affords the levels of protection specified in the following paragraphs of § 1910.156: (e)(2)(iii), (e)(3)(ii)(A), (e)(3)(ii)(B), and (e)(4)(ii).

Section 1910.157 Portable fire extinguishers.

This section contains the selection, distribution, maintenance, inspection and testing requirements for portable fire extinguishers which are provided in the workplace for employee use or which are located in the workplace and may be used by employees. The section also contains training and educational requirements for those employees expected to use portable fire extinguishers. As noted above in the general discussion of these standards, this is the only section is Subpart L that, by itself, imposes a requirement on employers to provide fire extinguishing equipment. (See § 1910.157(d)(1)). However, paragraphs (a) and (b) contain exemptions from this requirement when certain conditions are met.

Scope and application: Paragraph (a). In paragraph (a) OSHA explains when the specific requirements of this section apply and what equipment is covered. The paragraph states that the portable fire extinguisher section applies to all portable fire extinguishers provided for employee use inside of workplace buildings or enclosed structures.

OSHA proposed to cover all portable extinguishers provided for employee use inside of buildings because extinguishers are pressure vessels provided for employee use in emergency situations, and OSHA believes that some degree of control of the fire extinguishing equipment is necessary to assure that it will be available for use and operate correctly. Several commenters (Ex. 7: 11; 33; 60) did not understand why the scope of the paragraph is limited to extinguishers used inside or workplace buildings and structures. OSHA explained in the preamble to the Notice of Proposed Rulemaking (43 FR 60052) that greater protection is necessary for employees who must fight fires inside of buildings or enclosed structures because of the hazards associated with the build-up of heat, smoke, and toxic gases. In an effort to reduce the burden of execessive regulation on employers, OSHA has reduced the standards applicable to outdoor workplaces because there is a lesser hazards faced by employees fighting fires in exterior environments. For interior environments, however, more comprehensive standards are necessary because of the greater hazard presented to employees by the potential for the build-up of smoke, toxic gases, and heat. The accumulation of the products of combustion which can occur inside a building or an enclosed structure does not occur outdoors where such products can rise and dissipate. Therefore, OSHA has decided to adopt the proposed scope in the final standard.

Further, the paragraph establishes that paragraph (d) of this section does not apply to portable fire extinguishers provided for employee use on the outside of workplace buildings or structures. OSHA proposed that extinguishers provided in exterior workplaces comply with all of the standards in this section except for the distribution requirements. Less stringent distribution criteria are acceptable for exterior environments because employees have a greater opportunity to decide whether to provide incipient stage control or whether to call plant or local fire protection authorities. There is far less of a containment hazard

associated with smoke, toxic gases, and heat, and therefore, a better chance for quick escape.

The paragraph also states that employers who must provide extinguishers, which are required by another requlatory agency, and which are not intended for employee use, need only comply with paragraphs (e) and (f) of this section, and in addition they must have an emergency action plan and a fire prevention plan which meets the requirements of § 1910.38.

OSHA believes that some regulation of extinguishers provided in the workplace, but not intended for employee use, is necessary to assure that the extinguishers receive proper maintenance and testing to prevent their unintentional failure or rupture.

Exemptions: Paragraph (b). Paragraph (b) provides for either a total or a limited exemption from the fire extinguisher standard when certain specified criteria are met.

As proposed, paragraph (b)(1) provided a total exemption from the fire extinguisher standard where the employer had established and implemented a written fire safety policy that requires total and immediate evacuation of the workplace at the time of a fire. OSHA also proposed that the evacuation be supported by an emergency action plan and a fire prevention plan meeting the requirements of § 1910.38. Some commenters (Ex. 7: 33; 12; 33; 34; 162) did not believe that OSHA should permit such a total exemption. Southwest Research Institute (SRI) (Ex. 7: 33) suggested that no employer should be encourage to totally evacuate an area rather than provide extinguishers. NIOSH (Ex. 7: 34) believed that employees should be allowed to use portable extinguishers. Two other commenters (Ex. 7: 39; 162) suggested deleting the proposed language altogether. OSHA believes that the total exemption is appropriate because employee safety from fire is best provided, in most instances, by getting employees as far from the fire as possible. OSHA further recognizes that some employers already require a total evacuation of the workplace at the time of a fire and prohibit their employees from using extinguishers on any size fire.

OSHA believes that employers who choose to evacuate the workplace rather than provide fire extinguishers for employee's use will be minimizing the potential for fire-related injuries to employees. Therefore, OSHA is adopting the language of paragraph (b)(1) as proposed.

It should be understood that this exemption does not prohibit employees from fighting fires; it provides relief from the standard for those employers who do not want to involve employees in fire fighting at any level. It also establishes the criteria for evacuation plans used to obtain the exemption so that those plans will adequately provide employee protection during evacuation.

In paragraph (b)(2) OSHA proposed an exemption from the extinguisher distribution requirements for those employers who designate and train certain employees to use extinguishers and who require all other employees to evacuate upon the sounding of a fire alarm.

When the exemption criteria are met, the employer need not comply with the distribution requirements of the section. OSHA believes that an employer using trained employees, which need not be a fire brigade, can determine the extinguisher distribution plan that would best complement the fire protection plan. OSHA believes this exemption is necessary and will reduce the need for employers to file variance requests based upon the uniqueness of their fire protection plans. Further, the trained employees will be more familiar with the locations of the units and will be able to respond quickly to any fire situation.

General requirements: Paragraph (c). Paragraph (c) contains the general performance criteria for mounting, identifying and locating of portable extinguishers. It also contains criteria for the phasing out and prohibition of certain types of extinguishers found hazardous to employees.

In paragraph (c)(1) OSHA establishes the minimum mounting, locating, and identifying criteria for portable extinguishers. The paragraph also requires the employer to provide extinguishers in the workplace. Previously OSHA was rather specific in regulating extinguisher mounting heights, locations, and identification labels or signs. This previous policy of using specification type standards for mounting heights was widely criticized. In response to the criticism, OSHA raised some issues concerning mounting heights and locations in the December, 1978 Notice of Proposed Rulemaking. The comments addressing these issues supported OSHA's policy to shift to performance criteria and to eliminate specifications. The Southwest Research Institute stated (Ex. 7: 33 P. 4) "Flexibility in mounting extinguishers is a highly desirable approach." The Weyerhauser company stated (Ex. 7: 104 p. 1), "We agree with the elimination of a specific height requirement for the placement of extinguishers. . . ." PPG Industries commented (Ex. 7: 97 p. 3) "PPG agrees with the proposal for a performance requirement that portable fire extinguishers be accessible to employees rather than a specific mounting height requirement." OSHA believes that the specific mounting height of an extinguisher is unimportant as long as the employee can quickly reach and get the extinguisher without being injured. For example, the extinguisher may be mounted above the floor, on retractable platforms or be sitting on the floor as long as it is readily accessible. However, the need to use climbing devices such as ladders or step-stools to gain access to an extinguisher is unacceptable, as that is not consdered "ready access." Climbing devices may be unstable and may cause a fall injury to an employee who is hurrying to control a fire. Further, they may not be available when needed.

During the development of the final requirement in paragraph (c)(1), some parties (Ex. 7: 24; 113) questioned the meaning of "readily accessible." This term cannot be quantitatively defined for all circumstances. However, it is noted that in granting a variance to the Caterpillar Tractor Company in 1975 (40 FR 2629) for mounting extinguishers on retractable boards, OSHA considered "readily accessible" to mean available to the employee within one minute.

In paragraph (c)(3) of the proposal, OSHA prohibited the use of carbon tetrachloride and chlorobromomethane as extinguishing agents in portable fire extinguishers. This was done because of the toxic products of decomposition generated when these agents are discharged on hot surfaces and because of the toxic effects of the basic agent when it is handled by employees. The hazards of both agents are extensively discussed in the record of this rulemaking (Ex. 8: 25; 26; 27; 28; 29; 30).

One commenter, Mr. J. Hakes, (Ex. 7: 144) objected to OSHA's proposed prohibition of carbon tetrachloride as an extinguishing agent. He suggested that the toxicity and related health hazards of carbon tetrachloride are not as great as indicated by OSHA. He stated (Ex. 7: 144 p. 16) that he personally was not aware of any injury resulting from the use of carbon tetrachloride extinguishers and that the use of carbon tetrachloride on hot metals over 1,112°F or live flame would only produce "a safe level of 3 parts per million of phosgene gas."

OSHA does not agree with Mr. Hakes. It has been overwhelmingly demonstrated in the record that carbon tetrachloride used as an extinguishing

agent presents a severe and unwarranted health hazard to employees. The current permissible exposure limit for phosgene (8 hour, time-weighted average) in § 1910.1000, Table Z-1, is 0.1 ppm, significantly lower than the 3 ppm apparently considered safe by this commenter. In addition, other approved extinguishing agents, such as sodium bicarbonate and potassium bicarbonate, are as effective as carbon tetrachloride and present minimal, if any, health hazard to employees.

A further indication of the severity of the health hazard associated with carbon tetrachloride is that several states and cities have already banned the use of this agent in portable extinguishers (Ex. 8: 25). In addition, UL revoked their approval of carbon tetrachloride extinguishers in 1968.

Most commenters responding to this issue raised in the proposal (Ex. 7: 33; 41; 43; 48; 58; 97; 98; 122; 160; 173; 175) supported the prohibition of both carbon tetrachloride and chlorobromomethane as fire extinguishing agents.

Therefore, in light of the extensive support in the record, OSHA has decided to prohibit the use of carbon tetrachloride and chlorobromomethane as extinguishing agents in portable fire extinguishers.

In paragraph (c)(4) OSHA proposed that portable fire extinguishers be kept fully charged and in operable condition at all times except during use. One commenter (Ex. 7: 113) suggested that the proposed language imposing this obligation on employers precluded the use of outside contractors to perform extinguisher maintenance service. As explained previously, it is not OSHA's intent to preclude the use of outside contractors to perform services for employers.

In paragraph (c)(5) OSHA is requiring the removal from service by January 1, 1982 of all soldered or riveted shell self-generating soda acid or self-generating foam or gas cartridge water-type portable fire extinguishers which operate by inverting the unit to initiate an uncontrollable pressure generating chemical reaction to expel the agent. These types of shells are subject to excessive metal fatigue and "creep" at the seams of construction which can cause failure of the units and may injure the operator. OSHA received significant support (Ex. 7: 16; 55; 65; 119) for removing those units with riveted or soldered shells. OSHA has decided to phase-out units with riveted or soldered shells because of the known hazard (Ex. 8: 44; 78; 111) to employees created by excessive metal fatigue and "creep" at the seams of construction. This fatigue and "creep" is created over prolonged periods of time by normal pressurization of the shell during use and over shorter periods of time by overpressurization of the shell during hydrostatic testing. Environmental conditions may also contribute to the degradation of the shell integrity.

In Issue 7 (43 FR 60050) of the Notice of Proposed Rulemaking, OSHA asked whether it should phase out the use of all inverting-type extinguishers, including those which do not have soldered or riveted shells. One commenter, Mr. Hakes (Ex. 7: 144), objected to OSHA's proposed phase-out of any inverting-type extinguishers. Mr. Hakes alleged that the hazard to employees from this type of extinguisher was not as severe as indicated by OSHA in its Notice of Proposed Rulemaking and that the proposed phase-out was instituted to help market newer types of extinguishers. The record also contains considerable support (Ex. 7: 33; 34; 37; 39; 75; 105) the removal or the phase-out of all inverting-type extinguishers.

The Fire Equipment Manufacturers' Association (FEMA) suggested that all inverting-type fire extinguishers be removed from service because (Ex. 7: 175 p. 2):

> (1) Their manufacture has been discontinued for more than 10 years;
> (2) Underwriters' Laboratories, Inc. no longer include these types in its listing program;
> (3) Replacement parts are now unavailable, resulting in nonacceptable repairs and modification being done in the field;
> (4) The method of actuation is contrary to the desired and recognized method—(to operate in an upright position); and
> (5) These types do not incorporate the most important safety features of current designs:
> (a) shut-off nozzles,
> (b) tamper indicator, or
> (c) intermittent discharge capability.

As noted earlier, OSHA is phasing out the use of units with soldered or riveted shells because these units present a shell integrity problem. There is nothing to indicate, however, that inverting units of other construction present that type of hazard.

OSHA is, therefore, requiring that only those units known to be hazardous, i.e., those with soldered or riveted shells, be phased out. In light of FEMA's comments, however, employers are encouraged to consider replacement of all types of inverting units because it will standardize the method of extinguisher operation. OSHA will continue to accept inverting types with other than soldered or riveted shell construction. OSHA's position is consistent with NFPA 10-1978 (Ex. 8: 213). Employers are reminded that repairs and maintenance work done on units with approval labels, must be done in accordance with the approval label instructions if the unit is to retain its approval and remain acceptable to OSHA.

Selection and distribution: Paragraph (d). This paragraph establishes the requirements for the selection and distribution of portable fire extinguishers in the workplace. As noted, certain workplaces may be exempted from the requirements of this paragraph under exemptions provided in paragraph (a) and (b) of this section.

Paragraph (d)(1) establishes the basic performance requirement for the distribution of portable fire extinguishers. Extinguishers must be distributed throughout the workplace in a manner determined by the classes of anticipated fires and by the size or degree of hazard which contributes to fire.

In paragraph (d)(2) OSHA proposed to limit employee travel distances for Class A portable fire extinguishers to 75 feet or less. Most commenters (cf. Ex. 7: 87; 97; 121) suggested that the proposed requirement was too specific and that the proposed language was incompatible with the language in paragraph (d)(1). The Gulf Science and Technology Company stated (Ex. 7: 87 p. 5):

> . . . the travel distance limitations pose specific requirements for which compliance is very difficult to achieve in process facilities, storage tank areas, and similar open-type facilities in petroleum and petro-chemical industries.

After a review of the record however, OSHA has decided to leave the proposed langugage as the final requirement. It is noted that workplaces in exterior open-type environments are outside the scope and application of this paragraph and are not subject to its requirements. OSHA believes that sufficient flexibility for distribution within the specific maximum travel limit inside buildings and enclosed structures is provided in this paragraph. Employers preferring greater flexibility may use the exemptions provided in paragraphs (a) and (b) of this section. OSHA further believes that a maximum travel distance requirement is necessary to assure accessibility of extinguishers to all employees who may use them.

In paragraph (d)(3) OSHA proposed to permit employers to substitute uniformly spaced standpipe systems for Class A portable fire extinguishers. The comments (Ex. 7: 33; 41; 169; 175) were divided between supporting a total substitution and supporting a partial substitution of the required complement

of Class A extinguishers. Cargil's Corporate Safety Office (Ex. 7: 13) suggested that small diameter hose with nozzle pressure of at least 30 psi should be acceptable as substitutes for up to 50 percent of the required complement of Class A fire extinguishers. This position was supported by NFPA 10–1978 and by Schering-Plough Corporation (Ex. 7: 68). United States Steel stated (Ex. 7: 66 p. 2):

> OSHA should accept hose systems in lieu of portable fire extinguishers which would be consistent with their proposal on performance type standards.

OSHA believes that standpipe systems, or hose stations connected to sprinkler systems, with hose diameters as small as ⅝'"can provide, when used by trained employees, a sufficient fire extinguishing capability for Class A hazards. This viewpoint was endorsed by numerous comments (cf. Ex. 7: 20; 33; 40; 43; 66; 97). OSHA believes that this capability is sufficient to permit a total substitution for the Class A portable fire extinguisher requirement rather than the limited 50 percent substitution.

Standpipe systems installed in accordance with § 1910.158, and hose connections to sprinkler systems in accordance with § 1910.159, will provide the trained employee with water supplies and pressures equal to or greater than those available from Class A portable fire extinguishers.

OSHA believes that permitting total substitution is more protective of employee safety because of the superior capability of standpipe systems and sprinkler system hose connections over portable Class A fire extinguishers in providing extended water supplies and pressure.

OSHA believes that trained employees using standpipe systems or sprinkler system hose stations can provide a greater degree of fire protection for employee safety than several Class A two-and-one-half gallon portable fire extinguishers. Therefore, OSHA is permitting a total substitution of standpipe systems for Class A portable extinguishers.

It bears emphasis that this provision does not require total substitution when substitutions are made, nor does it require that any substitution be made. It requires only that if substitution is made, only standpipe systems meeting § 1910.158 or sprinkler system hose stations meeting § 1910.159 be used and that they provide total coverage of the area they are to protect.

In paragraph (d)(4) of the proposal, OSHA limited travel distances for employees to reach Class B fire extinguishers to 50 feet from the Class B hazard area. To avoid possible misunderstanding, OSHA has decided to change the proposed language by adding the phrase "or less" after 50 feet. This change clarifies OSHA's intent to establish a maximum travel distance.

In paragraph (d)(5) of the proposal OSHA established the distribution criteria for Class C extinguishers. OSHA has changed the proposed language to clarify the requirement. A Class C fire or hazard is one which requires the extinguishing agent to be electrically non-conductive. The actual fuel of the fire may be either Class A or Class B, and OSHA believes that the locations of extinguishers with a Class C classification must be determined on the basis of the actual Class A or Class B fuel hazard. The fact that the fire itself may constitute an electrical shock hazard, if certain agents are used, should not alter travel distances based on fuel hazards. Therefore, OSHA has revised the proposed language to indicate that extinguishers with a Class C classification are to be distributed based on the Class A or Class B fuel hazard that is present.

In paragraph (d)(6) of the proposal OSHA established the distribution criteria for Class D extinguishers or containers of Class D extinguishing agent. OSHA proposed to limit the travel distances from the combustible metal working area to any Class D agent to 75 feet. OSHA has decided to change the proposed language by adding the phrase "or less" after 75 feet. This change clarifies OSHA's intent to establish a maximum travel distance.

Inspection, maintenance, and testing: Paragraph (e). Paragraph (e) contains the requirements necessary to assure that portable fire extinguishers are properly maintained. It includes the criteria for the inspection, maintenance and testing of portable extinguishers. It does not cover hydrostatic testing which is covered in paragraph (f) of this section.

Paragraph (e)(1) establishes that it is the employer's responsibility to assure that all portable fire extinguishers provided in the workplace are maintained in accordance with the requirements of this paragraph.

Paragraph (e)(2) requires the employer to conduct monthly visual inspections of fire extinguishers or fire hose used in lieu of fire extinguishers, under paragraph (d) of this section.

In paragraph (e)(3) OSHA proposed a requirement for recording monthly inspection dates on portable extinguishers. A review of previous OSHA general industry fire protection standards showed that OSHA has never before required the recording of monthly inspection dates.

The comments (Ex. 7: 41; 57; 94; 98; 160) generally opposed the new proposed recordkeeping requirements. OSHA is deleting the recording requirement because it appears that requiring inspection date recording would unnecessarily increase the cost of compliance with the standard without increasing employee safety.

In paragraph (e)(4) OSHA proposed that employers subject portable extinguishers, except for stored pressure units, to an annual maintenance check. OSHA used the NFPA 10–1975 standard during the development of the proposal. However, the National Association of Fire Equipment Distributors (NAFED) identified a serious problem with the NFPA 10–1975 document in their comment (Ex. 7: 71). The language in the NFPA 10–1975 document ("Exception No. 1 of paragraph 4–4.1") was written in a manner which would not require annual maintenance checks on stored pressure units and would permit the omission of any maintenance for 5 or 6 years. According to NAFED, the NFPA committee on Portable Fire Extinguishers reported to the Secretary of the NFPA Standards Council on February 27, 1976 that (Ex. 7: 71 p. 7):

"It has never been the intent of the Standard (NFPA 10) to totally exempt stored pressure types of extinguishers from some annual maintenance requirements." OSHA has decided to change the proposed language of this requirement in light of the comments submitted by NAFED. OSHA has changed the language of the proposal so that the final OSHA standard is consistent with the NFPA 10–1978 (Ex. 8: 213) standard. The standard adopted by OSHA (final paragraph (e)(3)) requires at least an external check of stored pressure units on an annual basis. OSHA is requiring that an accurate record of the annual maintenance checks be maintained. The changes made by OSHA will make the final standard consistent with the NFPA's document.

In proposed paragraph (e)(5), OSHA required employers to empty and to subject stored pressure dry chemical and Halon 1211 extinguishers requiring a 12-year hydrostatic test to applicable maintenance checks every 6 years.

Several commenters (Ex. 7: 38, 94, 148) suggested that the reference to Halon 1211 be deleted. United Technologies commented (Ex. 7: 38 p. 3):

> It is agreed that dry chemical extinguishers should be subjected to maintenance procedures every six years. This is because of the possibility of the caking of the powder or corrosion of internal parts if moisture is introduced. Halon 1211 exhibits neither of these properties and, therefore, the

requirements for maintenance procedures every six years seems excessive.

The DuPont Company (Ex. 7: 93) suggested using the two exceptions found in the NFPA 10-1978 standard. One exception exempts dry chemical extinguishers having nonrefillable disposable containers from the requirement and the second exception permits flexibility in testing dates when an interim recharging or hydrostatic test is performed. OSHA agrees with the suggestion because it will make the NFPA and OSHA standards consistent on this point. Therefore, OSHA has changed the proposed language by adding the two exceptions recommended by DuPont in the final requirement (final paragraph (e)(4)) and by deleting the reference to Halon 1211.

In paragraph (e)(6) of the proposal, OSHA required that extinguishers removed from the workplace or from service for maintenance or recharging be replaced with extinguishers having the same classification and at least equivalent rating. Two commenters (Ex. 7: 66; 160) suggested that OSHA permit the substitution of "alternate equivalent protection." The American Iron and Steel Institute remarked (Ex. 7: 160 P. I-4):

As stated the provision requires the employer to maintain an inventory of spare fire extinguishers. Depending upon the size of the establishment, the spare extinguisher inventory could be extensive and costly. Provision for an alternate system grants flexibility and cost-saving alternatives to the employer.

OSHA agrees with the comments and has changed the proposed language to permit alternative equivalent protection such as temporary use of hose lines for class A extinguishers, curtailment of work activities, or other methods instead of specifying "extinguishers of the same classification and at least equivalent rating." OSHA believes this change (final paragraph (e)(5)) will maintain employee safety because it provides the flexibility for employers to provide the various alternative forms of fire protection recognized in this subpart.

Hydrostatic testing: Paragraph (f). This paragraph contains the requirements for the hydrostatic testing of portable extinguishers. It contains the criteria, time intervals, and equipment for hydrostatic testing.

OSHA, in paragraph (f)(1), requires that hydrostatic testing be done by trained persons with suitable equipment.

In paragraph (f)(2) and Table L-1, OSHA proposed the time intervals for testing fire extinguishers. One commenter, Cities Service remarked (Ex. 7: 49 p. 3):

OSHA should consider and investigate the current knowledge and experience in hydrostatic testing to determine appropriate test intervals . . . Improved design requirements and construction materials of portable fire extinguishers have drastically reduced employee exposure to any significant risk of the extinguisher structurally malfunctioning.

While OSHA can appreciate the new developments in extinguisher design, it is intent on having requirements compatible with the U.S. Department of Transportation which establishes the basic criteria for all compressed gas cylinder design. OSHA also recognizes the experience and supports the work of the NFPA 10 committee from whose standard Table L-1 is taken.

In light of this, OSHA does not believe that any changes, other than updating Table L-1 to reflect newer types of extinguishers and revising the language to permit the use of outside contractors are necessary.

In paragraph (f)(3) OSHA proposed that employers hydrostatically test extinguishers when they showed signs of corrosion or mechanical damage. NAFED strongly suggested that OSHA delete the proposed paragraph because (Ex. 7: 71 p. 4):

* * * based on our wide experience on this subject. Both NFPA 10 and the Compressed Gas Association (CGA) Pamphlet No. C-6 specifically warn that corroded shells N-O-T be hydrostatically retested under certain conditions.

OSHA has decided to change the proposed language to reflect the language of the 1978 edition of the NFPA 10 standard because the specific cases when the shells should not be tested are listed by NFPA. OSHA recognizes the potential hazard with testing weakened shells and believes that the amendment will assure employee protection from injuries which could occur if the weakened shell failed under actual use or under hydrostatic test conditions.

The five exceptions when shells should not be hydrostatically tested are, as follows:

(1) When the unit has been repaired by soldering, welding, brazing or use of patching compounds;

(2) When the cylinder or shell threads are damaged;

(3) When there is corrosion that has caused pitting including corrosion under removable nameplate assemblies;

(4) When the extinguisher has been burned in a fire; or

(5) When a calcium chloride extinguishing agent has been used in a stainless steel shell.

Paragraph (f)(4) of the proposal contained a hydrostatic test requirement for hose assemblies equipped with shut-off nozzles. One commenter (Ex. 7: 56) questioned the need for the proposed requirement. OSHA believes the requirement is necessary to assure employee safety from injuries which may occur due to failure or rupture of the hose under pressure; flexion or mechanical damage can weaken hose materials to the point where they will rupture under pressure.

Hose failure at the time of a fire would render an extinguisher useless and could expose an employee to a hazardous situation. Therefore, OSHA has decided to adopt the proposed language as paragraph (f)(5) of the final standard.

Paragraph (f)(5) of the proposal provided for a test pressure and interval for the testing of carbon dioxide extinguisher cylinders and nitrogen or carbon dioxide cylinders used with extinguishers. OSHA is adding the exception found in NFPA 10-1978 for cylinders complying with U.S. Department of Transportaton (DOT) regulations. The exception in NFPA 10 permits cylinders (except those charged with carbon dioxide) complying with § 173.34(e)(15), Title 49, Code of Federal Regulations, to be hydrostatically tested every 10 years instead of at the test specified in the paragraph (NFPA 10-1978; 5-3.1, Ex. 8: 213). OSHA is recognizing the exception because it will make the OSHA standard (final paragraph (f)(10)) consistent with both the NFPA and the DOT regulations without reducing employee safety.

Paragraph (f)(6) of the proposal (final paragraph (f)(11)) established a test pressure for stored pressure and Halon 1211 fire extinguisher shells. One commenter (Ex. 7: 11) questioned why OSHA limited the proposed requirement to Halon 1211 and did not include Halon 1301. OSHA did not include Halon 1301 because this type of extinguisher is not considered a stored pressure unit but rather is a self-expelling type similar to carbon-dioxide extinguishers.

In paragraph (f)(7) of the proposal (final paragraph (f)(12)) OSHA establishes a test pressure for acceptable soda-acid and foam type extinguishers.

In proposed paragraph (f)(8) OSHA established a test pressure for carbon dioxide hose assemblies. Two commenters (Ex. 7: 94; 168) suggested that OSHA correct the metric conversion for the pressure to read "8620 kPa." OSHA has made the correction in the rule (final paragraph (f)(6)). OSHA has also decided to amend the proposed language by requiring the

tests to be performed on extinguishers with shut-off nozzles. OSHA believes this change will more specifically describe the type of hose to be tested than the language used in the proposal.

In proposed paragraph (f)(9) (final paragraph (f)(7)), OSHA establishes the test pressure for dry chemical and dry powder hose assemblies and corrects the metric conversion figure.

In paragraph (f)(10) of the proposal (final paragraph (f)(13)) OSHA prohibits the use of air or gas pressure for testing cylinders.

In paragraph (f)(11) of the proposal (final paragraph (f)(14)) OSHA mandates that portable fire extinguishers which fail hydrostatic testing be removed from service and the workplace. OSHA has decided to modify the proposed language to require that extinguisher shells that are found unfit for testing under the criteria of paragraph (f)(4) of the final rule also be removed from service and the workplace. This change is being made to clarify the original intent of proposed paragraph (f)(11).

In paragraph (f)(12) of the proposal, OSHA specified the type of equipment to be used in hydrostatic testing of cylinders. The NFPA (Ex. 7: 161) contended that the proposal was appropriate for compressed gas cylinders, but was too stringent for non-compressed gas cylinders. Accordingly, they requested that OSHA adopt the guidelines established in NFPA 10–1978 for non-compressed gas cylinders, including the use of a hydrostatic test pump, a flexible connection for connecting the cylinder to the pump, and a protective cage or barrier. OSHA agrees that NFPA 10–1978 more clearly and specifically addresses the separate procedures and equipment to be used in testing non-compressed and compressed gas cylinders, respectively. Therefore, the proposed language is modified to cover only compressed gas cylinders, and new provisions based on NFPA 10–1978 are added to cover non-compressed gas cylinders. These testing requirements are contained in final paragraphs (f)(15)(i) and (f)(15)(ii).

Paragraph (f)(13) of the proposal (final paragraph (f)(9)) OSHA mandates that a protective cage be used when testing carbon dioxide hose assemblies.

Paragraph (f)(14) of the proposal (final paragraph (f)(3)) OSHA requires that, in addition to a visual examination, an internal examination of extinguisher shells must be conducted prior to testing.

In paragraph (f)(15) of the proposal OSHA mandated that the employer maintain records of required hydrostatic testing for 12-years. Several commenters (Ex. 7: 49; 73; 96; 113; 160; 173) questioned the need to retain records of 5-year test intervals for 12-years. A typical comment came from Western Electric (Ex. 7: 96 p. 3):

> The requirement to retain hydrostatic test records for a period of 12-years is not consistent with the actual test frequency as shown in Table L-1. The record retention should be in agreement with the test frequency interval for each particular type of extinguisher shown in Table L-1.

OSHA agrees with the comments and has amended the proposed language (final paragraph (f)(16)) to require that test records be maintained until the extinguisher is hydrostatically tested again. This change will reduce the burden of recordkeeping for employers and more accurately reflect the test frequency intervals.

In proposed paragraph (f)(16) (final paragraph (f)(8)), OSHA provides for an exemption from test marking for hose assemblies.

Training and education: Paragraph (g). This paragraph contains the requirements for training and educating employees in the proper techniques of incipient stage fire fighting.

These requirements are being promulgated to fill a gap in the standards that was identified during the development of the proposal. Several commenters (Ex. 7: 33; 41; 98; 122) suggested that if OSHA is going to permit employees to fight fires, then OSHA should also require employers to train and educate employees concerning the proper methods.

In proposed paragraph (g)(1) OSHA proposed that employers develop an educational program to familiarize employees with the general principles of fire extinguisher use. One commenter, Babcock-Wilcox, stated (Ex. 7: 73 p. 3):

> Providing an educational program for all employees as outlined here, and described in definition 15 (1910.156), is a process which goes beyond what is necessary to indoctrinate general employees. We think periodic reminders to all employees to know where extinguishers are located, to read the labels on extinguishers, and to know the difference between classes of fires is all that is necessary where the established procedure calls for using an extinguisher on small fires only where an employee feels confident in doing so.

Paragraph (g)(1) does not require an extensive educational program for all employees. OSHA believes that these basic principles of fire protection and prevention can be periodically transmitted to employees through various media.

Periodic reminders such as pay check envelope supplements, inter-office memos, or other administrative techniques including group instruction directed to employees who may use fire extinguishers would be helpful as parts of educational programs.

The goal of the educational program requirement is to assure that those employees who may use fire extinguishers are made aware of and kept familiar with the types and locations of extinguishers in the workplace, what fires they are effective on, the way to correctly operate them, and the company's fire protection and prevention policies.

The educational program does not include hands-on training, but where the employer decides to provide a training program this will be deemed acceptable as meeting the requirement for an education program. Employers are encouraged to develop educational programs that cover a wide spectrum of fire protection and prevention principles rather than programs that are limited to one or two principles. OSHA believes that the expanded type training will enhance employee awareness of fire protection and prevention policies.

Therefore, OSHA has decided to adopt paragraph (g)(1) as proposed, with several editorial corrections for clarification.

In paragraph (g)(2) OSHA provides for employee educational programs at initial employment and at least annually thereafter. Some commenters (Ex. 7: 73; 74; 119; 148; 168; 173) believed that an annual review was too frequent and created an undue burden on the employer. OSHA has decided to keep the requirement for annual review as proposed because the requirement is not an excessive burden on employers and does not mandate hands-on training or time away from a job. The annual requirement to educate employees is reasonable because it can be accomplished through administrative means such as written reminders to employees. Fire insurance carriers and fire equipment distributors provide useful educational materials to policyholders or customers at limited or no cost.

Since OSHA believes that an effective educational program can be carried out on an annual basis without imposing a substantial burden on employers, OSHA is keeping the annual review requirement in the final standard.

In paragraph (g)(3) OSHA established a training requirement for those designated employees who would be expected to use portable fire suppression equipment as part of an emergency action plan. OSHA believes that those employees who must fight fires in the workplace should be given first-hand experience in what to expect

if such equipment is used. OSHA has established a requirement that employees who are designated to fight fires be provided with hands-on training in the use of the portable fire suppression equipment that they will be expected to use. OSHA believes that hands-on training is the best method to acquaint employees with the operation of the available equipment. Hands-on training does not require actual fire fighting, but it must include operation of the equipment employees are to use. Employers can contract for training services or conduct their own. The lack of a training requirement has often been cited as one of the gaps in the existing OSHA standards.

Paragraph (g)(4) requires that training sessions be given upon initial assignment and at least annually thereafter. OSHA has determined that an annual requirement is necessary to be consistent with the training requirements for fire brigades. Annual training will also keep employees familiar with equipment and hazards in the workplace. OSHA does not expect employers to take employees out to a fire training ground or parking lot to discharge the same type of extinguisher every year. OSHA believes that the training program should be developed to give employees as much exposure to the different types of fire extinguishing devices and tactics available for use in the workplace. Once employees have mastered the use of the particular piece or pieces of equipment that they are to use, the employer should see that employees are given additional information to increase the employee's knowledge of fire protection and prevention techniques.

Section 1910.158 Standpipe and hose systems.

This section contains the minimum requirements for standpipe equipment, water supplies, inspection, testing, and maintenance. The requirements establish design and installation criteria for those systems installed to meet a particular OSHA standard, but this section does not actually require the employer to install a standpipe system. Another OSHA standard must cross-reference this section to make it mandatory.

For example, if a standpipe system is required by an OSHA standard for a sawdust bulk storage plant, then the specific standard covering the sawdust bulk storage plant will require the standpipe system to be installed. The standpipe system will then have to meet the requirements of § 1910.158. PPG Industries summarized the majority of comments when it stated (Ex. 7: 97 p. 2):

PPG agrees with the proposal that design and installation criteria for fire protection equipment and systems, required by other OSHA standards, should not be repeated in those standards; rather, these standards should reference OSHA Subpart L, Fire Protection for those criteria.

OSHA has decided to follow the recommendations of the commenters, because the approach will provide significant flexibility in determining the type of fire protection systems that can be installed in various workplaces. For example, as OSHA develops standards for various workplace fire hazards, the specific standard will either reference the entire section in Subpart L that covers the desired fire protection equipment, or it can reference only those parts of a section that are relevant to that workplace.

In this manner, OSHA will require by reference to Subpart L, the most effective fire protection equipment or system necessary for a specific fire hazard. This will eliminate the need for employers to refer to outside references. This reference to Subpart L in other subparts of Part 1910 will be used for all the standards for fixed and portable fire suppression systems and equipment.

Therefore, in § 1910.158, OSHA has decided to establish design and installation criteria for those standpipe systems required by other OSHA standards. This section does not require the employer to install the system.

The following changes in § 1910.158 paragraph numbering have been made to reflect deletions made in the final standard:

Proposed	Final	Proposed	Final
(a)(1)	(a)(1)	(c)(2)(i)	(c)(2)
(a)(2)	(a)(1)	(c)(2)(ii)	(1)
(a)(3)	(a)(2)	(c)(2)(iii)	(1)

[1] Deleted.

Scope and application: Paragraph (a). In paragraph (a)(1) of the proposal OSHA established the scope as including the requirements for the components, the water supply, the testing and the maintenance of standpipe systems installed to meet a particular OSHA standard. In changing the proposed language in paragraph (a)(1), OSHA included the proposed language of (a)(2) in the final language for (a)(1).

The final language in (a)(1) states that the section covers all small hose, Class II, and Class III standpipe systems installed to meet a particular OSHA standard.

Paragraph (a)(3) of the proposal (final paragraph (a)(2)) exempts from this section, Class I standpipe systems which are installed for use by full-time fire fighters trained in the handling and use of heavy hose streams. Generally Class I systems have no hose attached to the connection and are not ready for immediate use. The hose is generally provided by the responding fire department and is connected by them. OSHA does not believe that regulation of such systems is necessary for employee safety.

Protection of standpipe systems: Paragraph (b). In paragraph (b) OSHA requires that standpipes be located or otherwise protected against mechanical damage. It is also required that damaged standpipes be repaired promptly. One commenter, the Monsanto Company (Ex. 7: 110), suggested that employers should not be required to provide protective barriers around all standpipes. It was not OSHA's intention to require such barriers. The protection required by this paragraph can be afforded in many ways including guarding by location away from mechnical impacts.

Equipment: Paragraph (c). This paragraph contains the requirements for equipment used in standpipe systems installed for employee use. The paragraph covers hose cabinets and reels, hose connections, hose, and nozzels.

Paragraph (c)(1) requires that the employer design hose reels and cabinets in a manner that will not interfere with the operation of the standpipe system. It also requires that the employer identify the hose cabinets and use them only for fire equipment.

Final paragraph (c)(2)(i), establishes the criteria for hose outlets and connections.

In paragraph (c)(2)(ii) of the proposal, OSHA proposed criteria for the installation of pressure reducing devices at hose outlets.

Several commenters (Ex. 7: 38; 65; 94; 104; 150) suggested that the language be changed or deleted. OSHA believes that the regulation of excessive pressure in standpipe systems is better covered in the requirements for hose in paragraph (c)(3) which also addresses the pressure range acceptable at the nozzle end of hose lines. Therefore OSHA is deleting proposed paragraph (c)(2)(ii) and will address the hazard of excessive pressure in paragraph (c)(3)(iii) of this section.

In proposed paragraph (c)(2)(iii), (final paragraph (c)(2)(ii)), OSHA establishes a requirement that hose coupling screw threads be standardized or be compatible through the use of adapters. OSHA believes that standardized threads are highly advisable. The purpose of this provision is to assure

that hose connections can be made at the time of a fire. If an employer can achieve this goal with the use of adapters or through the use of standardized screw threads, that will be acceptable to OSHA.

In paragraph (c)(3)(i) OSHA proposed a requirement for 1½" standpipe hose to be attached to the hose outlet and to be ready to use. OSHA has decided to change the language in response to several comments (Ex. 7: 40; 94; 150). First, OSHA is deleting the specific reference to 1½" hose because OSHA is recognizing hose diameters from ⅝" up to 1½" for use on standpipe systems. Second, OSHA is requiring that only those hose outlets being used to meet the standard have hose attached and ready for use. In cases where employers have hose outlets which serve as secondary water supplies or are not being used to meet the standard, these hose outlets need not have hose attached to them. Those hose outlets being used as substitutes for portable fire extinguishers require hose attached and ready for use.

Third, OSHA is permitting hose to be stored away from exterior hose outlets whenever outdoor environmental conditions would adversely affect hose stored at such outlets. OSHA has decided to make this change to the proposed language based on a consideration of specific problems found in extremely cold climates such as those on the Alaskan North Slope.

In paragraph (c)(3)(ii) OSHA proposed a requirement that lined hose be installed on all hose systems installed after July 1, 1981. In Issue 14 of the Notice of Proposed Rulemaking (43 FR 60050), OSHA raised the question of whether unlined linen and hemp hose should be prohibited by OSHA. OSHA raised the issue because of the potentially hazardous condition that can exist with unlined linen or hemp hose that is improperly maintained. Unlined linen or hemp hose requires a good maintenance program and is subject to dry-rotting when it is not stored properly or when it is not thoroughly dried after use. Dry-rotted hose can fail unexpectedly when it is charged with water at the time of a fire.

Several commenters (Ex. 7: 18; 33; 66; 98; 109; 160; 173) addressed this issue. Some suggested that there is no problem with unlined hose if it is properly maintained. The General Motors Corporation (GM) stated (Ex. 7: 98 p. 4):

> Unlined linen hose should not be prohibited by OSHA. If existing standards do not contain adequate requirements for inspection and maintenance, then adequate requirements should be made. Lack of maintenance by itself is no reason for prohibition of the unlined hose.

OSHA agrees with the GM comment that lack of maintenance requirements is no reason to prohibit unlined hose. Therefore, OSHA is changing the proposal by not prohibiting unlined hose until it becomes unserviceable. If an employer can, through an effective maintenance program as required in paragraph 1910.158(e) of the final rule, assure the reliability of unlined hose, then the continued use of the hose is acceptable to OSHA. This amendment is consistent with the language in the current NFPA standard on standpipe systems, NFPA 14–1978.

The present NFPA standard requires that lined hose be used on all systems installed after June, 1976. Further, OSHA believes that unlined linen hose leaks excessively and wastes limited water supplies, and that the strength integrity of an unlined linen hose jacket is not as strong as a lined hose jacket. OSHA also believes that unlined hose will not be serviceable either with the test pressure requirements for hose in paragraph (e)(1)(ii) or with the use of shut-off nozzles where the hose may be subjected to high pressure when the nozzle is shut off. Therefore, upon failure of unlined hose to meet the requirements of 1910.158(e) unlined hose systems will necessarily be phased out.

Many commenters (Ex. 7: 6; 41; 42; 43; 55; 56; 97; 122; 161; 175) support a requirement to either phase-out or replace unlined hose when it is no longer serviceable. Therefore, OSHA has decided to adopt the proposed language as the final standard because it will permit continued use of serviceable unlined hose, but will require lined hose on new systems and on those systems where unlined hose has become unserviceable. OSHA believes that this approach will assure employee safety when using unlined hose.

In paragraph (c)(3)(iii) OSHA establishes 30 psi as the minimum water pressure acceptable at the nozzle of standpipe systems. Paragraph (c)(3)(iii) also addresses the maximum and minimum water pressure levels which were proposed as paragraph (c)(2)(ii).

In proposed paragraph (c)(2)(ii), OSHA limited the maximum water pressure under static or dynamic conditions to 100 psi. OSHA received several comments (Ex. 7: 65; 75; 87; 93; 94; 97) addressing the proposed 100 psi maximum limit.

The commenters noted that it was not uncommon to find water pressures greater than 100 psi and that employees trained in the use of fire hose could handle greater pressures. In paragraph (c)(3)(iii) of the final standard, OSHA is changing the maximum pressure level from 100 psi (as proposed in (c)(2)(ii)) to 125 psi. OSHA is aware that variable stream nozzles are designed to operate at 100 psi pressure. However, the higher pressure is acceptable because trained employees using shut-off nozzles can handle 125 psi safely, and because the greater pressure limit will both accommodate pressures found in some standpipe systems and enhance design flexibility for standpipe systems. Further, OSHA has added a sentence to limit dynamic flow pressures to a range between 30 psi and 125 psi inclusive at the nozzle.

In paragraph (c)(4) of the proposal OSHA mandated that all standpipe hose used to meet this standard be equipped with shut-off type nozzles beginning July 1, 1981. In addition to the proposed language, OSHA raised an issue in the Notice of Proposed Rulemaking, which asked whether OSHA should mandate variable stream shut-off nozzles (Issue No. 12, 43 FR 60050).

The majority of commenters (Ex. 7: 33; 72; 97; 98; 169; 175) addressing Issue 12 and the proposed language in paragraph (c)(4) supported the requirement for shut-off nozzles but did not believe that variable stream nozzles were necessary.

The comments indicated that while variable stream nozzles may provide additional water patterns to use in fighting fires, there was no need to specifically require them since a straight stream nozzle with a shut-off valve could provide adequate water to control or extinquish the types of fires with which OSHA is concerned.

OSHA believes that only shut-off nozzles are necessary for employee safety, because it gives the employee adequate control over the flow of water for better tactical use. It also allows the employee to shut off a nozzle and move it to a new vantage point while it is charged with water, to use the water for the best effect. This option is not usually available to employees using a straight stream open bore type nozzle. With straight stream open bore type nozzles, the employee has no way to control the water supply if the pressure becomes too great for proper handling of the hose. If it becomes necessary to drop the nozzle and run, the straight stream open bore nozzle can "whip" around and injure employees. Therefore, OSHA has decided to adopt the proposed language as the final standard with some minor editiorial changes.

OSHA wishes to emphasize that the final standard requires a shut-off type nozzle. For the purpose of compliance, employers may use a ball valve or

similar valve placed in the hose line between a straight-stream open bore nozzle and the hose. OSHA believes this approach can reduce the burden of replacing nozzles where such valves are available.

Water supplies: Paragraph (d). In proposed paragraph (d) OSHA established the minimum water supply of 30 minutes duration at 100 gallons per minute for standpipe systems. OSHA also proposed a minimum residual pressure at the topmost outlet. OSHA raised a related issue in the Notice of Proposed Rulemaking (Issue "d", 43 FR 60051) which asked whether single source water supplies would be adequate for employee safety. The majority of commenters (Ex. 7: 11; 32; 34; 37; 43; 55; 65) supported the concept of single source supplies in low and ordinary occupancy workplaces where the supply will adequately protect employees during evacuation or incipient stage fire fighting operations. OSHA has decided that a water supply meeting the proposed 30 minute duration, 100 gallon per minute criterion is necessary for employees safety regardless of the number of sources. If the employer can assure that a single water supply will provide 100 gallons per minute for 30 minutes, then OSHA will consider it an acceptable supply.

Employers should be aware that a number of fire protection systems could simultaneously draw from a single source. In providing a single source supply, the employer must be able to assure that the water supply criteria for the standpipe system can be met when the source is supplying all of the systems connected to it.

OSHA is adopting the proposed language of paragraph (d) except the residual pressure criteria for the topmost outlet; standpipe pressures are adequately addressed in paragraph (c)(3)(iii) of the final standard.

Tests and maintenance: Paragraph (e). Paragraph (e) contains the minimum criteria for acceptance tests and maintenance to be performed on standpipe systems used to meet this standard.

Final paragraph (e)(1)(i) establishes criteria for hydrostatically testing piping in Class II and Class III standpipe systems installed after January 1, 1981. There were some comments (Ex. 7: 44; 99) which suggested additions to the acceptance tests. However, OSHA believes that the language, which is consistent with NFPA 14–1978, adequately covers the tests needed to assure system reliability.

In paragraph (e)(1)(ii) of the proposal OSHA established the criteria for hydrostatically testing fire hose to be used on standpipe systems installed after January 1, 1981.

Several commenters (Ex. 7: 41; 55; 72; 173; 175) suggested that OSHA adopt the appropriate provisions of the current NFPA 14–1978 standard on standpipe systems. After reviewing the proposal for consistency with the NFPA standard, OSHA has decided to adopt the proposed language as the final standard with the following minor changes. OSHA has deleted the specific reference to Class II and Class III standpipe systems and replaced it with the term "standpipe systems" because OSHA recognizes hose systems other than Class II and Class III. Hose on all standpipe systems must comply with these requirements.

In paragraph (e)(2)(i), OSHA establishes the requirement to keep water supply tanks filled to the proper level.

Paragraph (e)(2)(ii) establishes the requirement that valves in the main piping connections of automatic water supplies be kept fully open at all times.

OSHA received one comment (Ex. 7: 44) which suggested that OSHA require the valves to be supervised in order to monitor whether they are in the open position. Although OSHA agrees that supervision of valve assemblies may be one way to assure the reliability of a system, OSHA also recognizes that it is possible to keep valves open without a true electrical supervision program through a good preventive maintenance program conducted by trained technicians.

In paragraph (e)(2)(iii) OSHA proposed semi-annual physical inspections of standpipe hose. The NFPA (Ex. 7: 161) suggested that OSHA adopt a requirement for annual rather than semi-annual inspection of fire hose, as contained in NFPA Standard No. 1962–1979. OSHA agrees that the OSHA standard should be consistent with the NFPA standard in this regard.

OSHA does not believe that this change from semi-annual to annual inspection will reduce employee safety.

Where employers are providing hose systems in lieu of portable fire extinguishers, such systems are to be treated as "portable extinguishers" for the purpose of inspection, and § 1910.157 requires a monthly inspection check of such systems.

In proposed paragraph (e)(2)(iv) OSHA required that unserviceable components of systems be removed from service and replaced with equivalent protection. OSHA has clarified the proposed language in the final standard by citing examples of equivalent protection such as fire watches and portable extinguishers.

In paragraph (e)(2)(v) OSHA proposed that unlined hose be un-racked, physically inspected, and re-racked annually. OSHA also proposed that defective hose be replaced in accordance with this standard. One commenter (Ex. 7: 6) suggested that OSHA require that a different fold pattern be used when re-racking the hose. OSHA has decided to add such a requirement because it assures that the yarns in the hose casing do not become worn or weakened due to continued folding at the same places.

Paragraph (e)(2)(vi) provides that all inspections required in this paragraph be conducted by trained persons designated to perform the task.

Section 1910.159 Automatic Sprinkler Systems

This section contains the minimum design and installation criteria for automatic sprinkler systems installed to meet an OSHA standard. The section, by itself, does not require sprinkler systems to be installed. For example, in § 1910.106(h)(6)(ii)(D), OSHA requires processing plants to be protected by "an approved automatic sprinkler system." The required system must be installed and maintained in accordance with the requirements of this section.

Scope and application: Paragraph (a). Paragraph (a) explains which systems are covered by the requirements of this section and which requirements apply to those systems.

Paragraph (a)(1) requires the employer to install, maintain, and test automatic sprinkler systems installed to comply with OSHA standards in accordance with the requirements of this section.

In paragraph (a)(2) OSHA proposed to continue to accept automatic sprinkler systems installed prior to the effective date of this standard and in accordance with a previous NFPA or National Board of Fire Underwriters (NBFU) standard if the system is kept in compliance with the earlier NFPA or NBFU standard. Several commenters (Ex. 7: 65; 66; 160) suggested that OSHA delete all references to the NBFU since that organization no longer exists. OSHA is aware of the termination of NBFU and of the fact that the NBFU generally republished the NFPA standard in effect at the time they promulgated their standards booklet. However, OSHA will still recognize older installations as being acceptable if they comply with the NBFU standard in effect at the time of installation. Similarly, compliance with the NFPA standard in effect at the time of installation will also be recognized as acceptable compliance with this OSHA standard.

Therefore, OSHA has made no changes to the proposed language.

Exemptions: Paragraph (b). In paragraph (b) OSHA proposed to exempt automatic sprinkler systems installed in the workplace for the sole purpose of property protection. Some commenters (Ex. 7: 42; 74) asked who makes the determination that a system is installed solely for property protection. The J. I. Case Company stated (Ex. 7: 74 p. 8):

> Who is to ascertain the exemption? Virtually all Case facilities are protected by automatic sprinkler systems and (they) are there, for the most part, for property protection.

OSHA has decided to amend the proposed language to clarify the interpretation of "for the sole purpose of property protection." OSHA has taken the position that only those systems required by OSHA should be regulated by this standard.

Other systems installed in the workplace can be considered property protection systems and subject to the control of local fire officials. Therefore, OSHA has modified the proposed language to more clearly reflect this view.

General requirements: Paragraph (c). Paragraph (c) contains the minimum requirements for the design, maintenance, and testing of automatic sprinkler systems.

OSHA has renumbered some of the proposed paragraphs as follows because of deletions made in the final standard:

Proposed and Final

(c)(8) is deleted.
(c)(9)(i) now (c)(8)(i).
(c)(9)(ii) now (c)(8)(ii).
(c)(9)(iii) now (c)(8)(iii).
(c)(10) now (c)(9).
(c)(11) now (c)(10).
(c)(12) now (c)(11).

In paragraph (c)(1)(i) OSHA establishes the minimum design criteria for automatic sprinkler systems. The proposed language required that systems provide the necessary waterflow, water densities, and water discharge patterns to provide complete coverage of the hazard area. OSHA has decided to adopt the proposed language as the final rule with a change which does not affect the substance of the proposed requirement but will clarify the language.

OSHA is deleting the phrase, "whether hydraulic or pipe schedule," from the final language because all sprinkler systems are based on either one or the other type of design.

Paragraph (c)(1)(ii) requires that only approved equipment and devices be used in the design and installation of a sprinkler system.

Paragraph (c)(2) OSHA requires that employers properly maintain systems installed to comply with this section. The U.S. Department of Energy (Ex. 7: 142), suggested that repairs only be performed on systems when employee exposure is at a minimum. OSHA agrees with the suggestion and has decided to include it in the appendix as a guideline. OSHA has also added a requirement that employers must assure that an annual main drain flow test is conducted and that the inspector's test valve is opened at least every two years. OSHA believes that this provision will further assure the reliability of the system and the adequacy of the maintenance program.

In paragraph (c)(3) OSHA proposed certain acceptance tests that must be performed on sprinkler systems to assure they will function properly when needed. One commenter, Southwest Research Institute (Ex. 7: 33), questioned the need for elaborate tests. OSHA does not believe that the tests required by the standard should be characterized as elaborate. Because of the recognized excellent performance of systems installed and tested in accordance with the NFPA standard on Automatic Sprinkler Systems, NFPA 13, OSHA proposed the same tests that are recommended by the NFPA. OSHA has decided to adopt the proposed tests in the final standard because of the degree of safety that they will provide employees in assuring that the system will function as designed. OSHA has also revised the proposed language by changing the effective date for the requirement to give employers additional time to comply.

In paragraph (c)(4) OSHA proposed that each automatic sprinkler system be provided with at least one automatic water supply capable of providing the designed flow for at least 30 minutes. OSHA also proposed that an auxiliary water supply be available or an emergency evacuation plan be prepared for use when the system is out of service.

Several commenters (Ex. 7: 38; 51; 68; 72) questioned the need for an auxiliary water supply if employees are assured of alternative means of safety such as hose lines and fire watches when the primary water supply is not available. Other commenters (Ex. 7: 37; 38; 72; 74) found the requirement for an emergency evacuation plan to be too burdensome and suggested that other alternative means of safety are available. OSHA has decided to change the proposed language to reflect that an emergency evaculation plan is only one of many alterntive means of providing employee safety when the primary water supply is out of service. These alternatives may include auxiliary water supplies, fire watches, or increased standpipe hose or extinguisher coverage. OSHA believes that the change to the proposed language will provide the employer with a greater degree of flexibility in determining alternative means of providing employee safety without reducing the level of safety.

In paragraph (c)(5) OSHA proposed that employers may attach hose connections for fire fighting use to wet pipe sprinkler systems in other than high hazard occupancies if the water supply could satisfy the designed waterflow demand for both the hose connections and sprinkler systems. Some commenters (Ex. 7: 94; 168; 173) suggested deleting the proposed restriction on high hazard occupancies. OSHA believes as long as a combined system provides an adequate water supply for both the hose connections and the sprinkler systems, then such a combined system should be acceptable, even in high hazard occupancies. The Organization Resource Counselors, Inc. (ORC) stated (Ex. 7: 94 p. A-10):

> Where hose outlets are attached to sprinkler systems especially in case of high hazard spacing this should be permissible providing the hydraulic calculation includes the water supply demand for hose outlets.

The Xerox Corporation further supports the deletion (Ex. 7: 173 p. 6):

> We feel this reference to "high hazard" should be deleted from the standard.
> National consensus standards do not restrict fire hoses for this reason. If the concern is employee safety, is the hazard greater using a hose at a high hazard workplace? Also, if the employee is properly trained and protected, it should not matter what the degree of workplace hazard.

In addition, it should be noted that NFPA 13-1978 does not restrict the use of 1½" hose line connections to wet pipe sprinkler systems provided that the water supply is sufficient for both. Therefore, OSHA has decided to delete the high hazard restriction from the final standard. Although NFPA does prohibit 2½" fire department connections in high hazard occupancies, OSHA is not adopting that provision because OSHA is not regulating connections for fire department use.

Paragraph (c)(6) requires that sprinkler piping be protected against freezing and exterior surface corrosion.

Paragraph (c)(7) provides that all dry sprinkler system piping be installed so that it can be drained. This is necessary so that water which could freeze or cause interior pipe corrosion can be drained after each use or test.

Paragraph (c)(8) of the proposal prohibited torch cutting as a means of modifying or repairing sprinkler systems because of the potential for obstruction of the waterflow. Several commenters (Ex. 7: 18; 33; 73; 94; 102; 173) suggested that there is no problem with torch cutting if the employer can assure unrestricted waterflow after the repairs are completed and if the performance of the system can be assured. Since OSHA is shifting toward performance type standards, OSHA believes that this proposed requirement is not necessary if the employer can assure unrestricted flow of water through the system. This can be determined by testing the system. Therefore, OSHA has decided to delete the proposed requirement because it is not necessary to limit the methods of modifying or repairing sprinkler systems if the employer can assure that the system will operate effectively.

Proposed paragraph (c)(9)(i), (final paragraph (c)(8)(i)), requires that only approved sprinklers be used on acceptable sprinkler systems.

In paragraph (c)(9)(ii) of the proposal OSHA permitted use of older style sprinklers as replacements in systems using the old style sprinklers or the replacement of standard sprinklers if a complete engineering review is done on the system. (The water patterns of older style sprinklers do not provide uniform density over the protected area as compared to the water patterns of standard sprinklers which do provide uniform density over the protected area.) Some commenters (Ex. 7: 74; 93) questioned the need for a complete engineering review. DuPont remarked (Ex. 7: 93 p. 5) "A complete engineering review is unnecessary, an engineering review of the altered part of the design is all that is necessary." The J. I. Case Company (Ex. 7: 74) discussed the costs that would be related to such a requirement. OSHA has decided to change the proposed language (final paragraph (c)(8)(ii)) by requiring an engineering review of only the altered part or parts of the system. OSHA agrees that an engineering review of the unaltered part of the system would serve no function for employee safety.

Proposed paragraph (c)(9)(iii), (final paragraph (c)(8)(iii)), requires that sprinklers located where they are subject to mechanical damage be protected with effective guards to prevent mechanical damage.

Proposed paragraph (c)(10), (final paragraph (c)(9)), requires a local water flow alarm on all systems having more than 20 sprinklers which activates with a flow equal to that of a single sprinkler. One commenter (Ex. 7: 97) suggested that alarms other than water motor gongs should be permitted. OSHA did not intend to limit alarm selection to water motor gongs. Any type of approved alarm that indicates waterflow equal to that from a single sprinkler is acceptable.

Paragraph (c)(11) of the proposal (final paragraph (c)(10)) establishes the performance criteria for sprinkler spacing.

In proposed paragraph (c)(12), (final paragraph (c)(11)), OSHA establishes identification requirements for hydraulically designed systems.

Section 1910.160 Fixed Extinguishing Systems, General

This section contains the minimum general requirements for all fixed extinguishing systems except automatic sprinkler systems. Automatic sprinkler systems are covered in § 1910.159. The format of this section differs significantly from the previous OSHA fire protection sections because it applies to all fixed systems rather than one single system. The general requirements of this section are to be applied along with the more specific requirements of this subpart for a particular agent, to regulate fixed extinguishing systems which are required by other OSHA standards.

For example, if a Halon 1301 system is required by OSHA or is used to meet an OSHA standard, then that Halon system would have to meet the requirements of both §§ 1910.160 (general requirements) and 1910.162 (gaseous systems). OSHA believes that this format will make the standard easier to understand as it eliminates the need to repeat the general requirements in each section. In addition, as noted in paragraph (a)(2), certain portions of this section apply to those extinguishing systems, regardless of whether they are required by an OSHA standard, with extinguishing agents which could expose employees to possible injury, death, or adverse health consequences.

Scope and application: Paragraph (a). Paragraph (a) explains what fixed systems are covered and what requirements apply to them.

In paragraph (a)(1) OSHA proposed that the section apply to all fixed systems. OSHA has decided to amend the language of the final rule to make it clear that automatic sprinkler systems are not covered by this section. Section 1910.159 adequately regulates automatic sprinkler systems.

In paragraph (a)(2) OSHA proposed that all fixed systems that could, by means of their operation, expose employees to possible injury, death, or adverse health consequences were covered by paragraphs (b)(4) through (b)(7) and (c) of this section.

OSHA has decided to adopt the proposed language as the final requirement except for adding the phrase "caused by the extinguishing agent" to the final language to clarify those adverse health consequences about which OSHA is concerned.

Paragraph (a)(3) exempts those systems otherwise covered in (a)(2) from the requirements of this section if there is no employee exposure.

General requirements: Paragraph (b). This paragraph contains the minimum general requirements for the design, maintenance, and inspection of fixed extinguishing systems. It also contains the minimum requirements for employee alarms related to fixed extinguishing systems.

In paragraph (b)(1) OSHA proposed that all fixed extinguishing systems, components and agents must be approved for their intended use.

OSHA has decided to change the proposed language because systems, while comprised of approved components, are not generally approved as total systems. Therefore, OSHA is changing the proposed language by eliminating the requirement that "systems" be approved and to require only that system components and agents be approved for use on specific hazards.

In paragraph (b)(2) OSHA proposed that employees be notified when fixed systems are inoperative and that the employer take the necessary temporary precautions to assure employee safety until the system is repaired and restored to service. There were no substantive comments which addressed the proposed language and OSHA is adopting the proposed language as the final rule.

In paragraph (b)(3) OSHA proposed the requirement for the installation of a discharge alarm to indicate when a fixed extinguishing system is discharging.

OSHA has changed the proposed language to permit the use of alternative signaling systems which comply with § 1910.165 and to clarify that the alarm or other system is only to activate in that portion of a workplace covered by the system. This change will provide flexibility in alarm selection and will require that the alarm be in the area covered by the system rather than in a remote area. OSHA has also changed the language to exempt systems where discharge is immediately apparent to anyone in the area. The purpose of the alarm is to assure that employees in an area where discharge is not immediately apparent are made aware that the system is discharging.

In proposed paragraph (b)(4) OSHA required the employer to provide an alarm to prevent employees from entering discharge areas where the atmosphere remains hazardous to employee safety and health. OSHA has changed the proposed language to permit the use of safeguards other than alarm systems rather than specifically limiting the means of warning.

OSHA believes this performance-type language will give the employer the flexibility necessary to provide safeguards such as barriers or door guards.

In paragraph (b)(5) of the proposal OSHA required the employer to post hazard warning signs in areas where extinguishing agents known to be hazardous exist. One commenter (Ex. 7: 65) suggested that the requirement should apply only to total flooding systems and not to local application systems. It is true that a hazardous concentration of an agent is most likely to occur in total flooding areas; however, there is a possibility that hazardous concentrations of certain agents could occur near local application systems.

OSHA has changed proposed paragraph (b)(5) to clarify that OSHA is concerned about the concentration of the agent and not the type of system. For example, Halon 1301 can be used in concentrations ranging from 5 percent to greater than 10 percent. In a 5 percent concentration the agent is not known to be hazardous; however, in concentrations greater than 10 percent the agent becomes hazardous to employees. OSHA is concerned about warning employees of the higher, more hazardous concentrations. Therefore, the final standard reads as follows: "The employer shall post hazardous warning or caution signs at the entrance to, and inside of, areas protected by fixed extinguishing systems which use agents in concentrations known to be hazardous to employee safety and health."

Paragraph (b)(6) requires an annual inspection of fixed extinguishing systems.

In paragraph (b)(7) OSHA proposed that the weight and pressure of refillable containers be checked semi-annually. The proposed language also established criteria for maintenance checks and recordkeeping. Several commenters (Ex. 7: 9; 38; 40; 66; 93; 94; 119) suggested changes to the proposed language that would permit dry-chemical containers to be checked annually and gaseous-type agent containers to be checked semi-annually.

OSHA has reviewed the applicable NFPA standards for dry chemical and gaseous agents (NFPA 17-1975; NFPA 12-1977; NFPA 12A-1977; NFPA 12B-1977) and has determined that a semi-annual pressure and weight check for both types of agents is necessary for employee safety and is consistent with the consensus standards. OSHA has deleted the recordkeeping requirement because it is adequately covered in paragraph (b)(9) of this section.

Paragraph (b)(8) requires that employers weigh factory-charged nonrefillable containers which have no means of pressure indication at least semi-annually.

In paragraph (b)(9), OSHA establishes a recordkeeping requirement for maintenance and inspection checks.

OSHA has changed the proposed language to permit records to be kept in a central location, on the container or on a tag attached to the container. OSHA believes that this change will make the requirement consistent with other recordkeeping requirements and will provide the employer with additional flexibility in recordkeeping. OSHA has also established a maximum time period for maintaining the record which is consistent with the other recordkeeping standards in this subpart. OSHA does not believe that it is necessary to retain the maintenance and inspection records beyond the life of the container being tested or maintained.

In paragraph (b)(10) of the proposal OSHA mandated that employers train and periodically review the inspection, maintenance, operation, and repair procedures with employees designated to perform those functions. The only change in the language as proposed is to require an "annual" review of the functions rather than a periodic review, in order to clarify OSHA's intent as to the meaning of "periodically."

In paragraph (b)(11) OSHA proposed that carbon tetrachloride and chlorobromomethane be prohibited as an extinguishing agent on fixed systems. Several commenters (Ex. 7: 11; 38; 52; 94; 98) suggested that OSHA exempt explosion suppression systems from the requirement because a large number of these systems use chlorobromomethane as the agent. As noted earlier, paragraph (a)(3) of this section exempts from the standards on fixed systems those otherwise hazardous systems which do not expose employees to the hazardous agent. Those explosion suppression systems using chlorobromomethane which operate in milliseconds within an enclosed space and pose no threat to employees are, therefore, exempted under paragraph (a)(3).

In paragraph (b)(12) OSHA proposed that the employer "coat" those system components installed out of doors or in the presence of corrosive atmospheres. Several commenters (Ex. 7: 9; 11; 93; 94; 173) suggested alternative ways of preventing corrosion of system components to coating or painting. The Ansul Company (Ex. 7: 9) claimed that some components, by means of their construction, may not be subject to corrosion. Another commenter (Ex. 7: 11) suggested the use of construction materials such as stainless steel for prevention of corrosion. OSHA believes that it is possible to protect system components from corrosion through means other than "coating." Therefore, the proposed language has been changed to permit system components to be protected by use of non-corrosive materials or other means.

Paragraph (b)(13) requires that automatic detection equipment be installed in accordance with 29 CFR 1910.164.

In paragraph (b)(14) OSHA proposed that all fixed systems be designed to operate within the range of −20° F (−40° C) to 130° F (54° C). There was also a proposed requirement that systems designed for extreme temperature operation be capable of functioning at the extreme temperature. Several commenters (Ex. 7: 9; 10; 11; 38; 49; 52) questioned the need for a specific range of temperatures if OSHA is concerned about establishing performance criteria. Some of the commenters suggested that the last sentence of the proposed requirement would suffice for employee safety. OSHA has decided to change the proposal by deleting the requirement that all systems function within the specified range because the purpose of the requirement is to assure that a system will operate correctly in the temperature range in which it is used. It is not necessary to design a system to operate at −20° F (−40° C) if the temperature never reaches that level where the system is located. OSHA believes this change will provide increased flexibility in the design of fixed systems particularly in areas of extreme temperature variations. The final requirement reads, ". . . that where systems are installed in areas with climatic extremes, they shall operate effectively at the expected extreme temperatures."

In paragraph (b)(15) OSHA proposed that the design concentration of an engineered system be reached within 30 seconds of initial discharge. An engineered system is one which is designed for the specific conditions present in a workplace. Several commenters (Ex. 7: 9; 32; 93; 120) identified inconsistencies between the

proposed OSHA standard and the present NFPA standards applicable to fixed Halon systems. NFPA 12A–1977 and NFPA 12B–1977 presently require designed concentration to be achieved within 10 seconds.

OSHA has decided to cover this topic in the individual sections which address the different systems. For example, the discharge time for dry chemical systems to reach the design concentration will be covered in § 1910.161 and the discharge time to achieve the design concentration for CO_2 and Halon systems will be covered in § 1910.162. Therefore, OSHA is deleting proposed paragraph (b)(15) because of the variable discharge rates for different types of agents as contained in the NFPA standards.

In paragraph (b)(16) OSHA proposed that automatic actuation on systems that exceed the maximum safe concentration of agent be by means of approved detecting devices and that an employee alarm be interconnected with the discharge system to assure employees can safely leave the area prior to discharge. OSHA has decided to move this requirement to paragraph (c) of this section which applies to total flooding systems with potential health and safety hazards to employees.

In paragraph (b)(17) of the proposal (final paragraph (b)(15)) OSHA mandates that one manual activation device be provided for each fixed extinguishing system.

Paragraph (b)(18), (final paragraph (b)(16)), OSHA requires that the employer identify manual operating devices as to the hazard they protect.

In paragraph (b)(19) of the proposal OSHA mandated that employers provide and make personal protective equipment readily available near the protected area for employee rescue from hazardous atmospheres. Some commenters (Ex. 7: 9; 11) questioned the meaning of "near the protected area." OSHA has decided to delete the phrase from final paragraph (b)(17) because it is vague and to change the remaining language to require that the equipment be available and used for immediate rescue of employees. OSHA believes that these changes will clarify where the equipment is required. The employer can determine where to store the equipment as long as it is immediately available to be used in rescuing employees stranded in the protected area.

In paragraph (b)(20) of the proposal, OSHA required the employer to provide a means of egress from the discharge area in accordance with 29 CFR Part 1910, Subpart E. One commenter (Ex. 7: 49) questioned the need for the requirement in this section since means of egress are more appropriately covered in Subpart E. OSHA agrees and is therefore deleting proposed paragraph (b)(20) from the final standard.

Total flooding systems with potential health and safety hazards to employees: Paragraph (c). Paragraph (c) contains minimum requirements for the protection of employees from hazards associated with the discharge of hazardous concentrations of extinguishing agent from total flooding systems. The requirements of this paragraph apply to any system installed in the workplace regardless of the purpose of the system. If the system, through its operation, exposes employees to hazardous concentrations of an extinguishing agent, then that system must meet the requirements of this paragraph.

Paragraph (c)(1) requires that the employer provide an emergency action plan in accordance with § 1910.38 for each discharge area protected by a total flooding system which provides an agent in concentrations greater than the maximum safe level for the agent as established in paragraphs (b)(5) and (b)(6) of § 1910.162.

Paragraph (c)(2) establishes an exemption from the requirements of paragraph (c) for those systems in areas which employees cannot enter either during or after the system discharge.

In paragraph (c)(3) OSHA proposed that the employer provide a pre-discharge alarm on total flooding systems covered by this paragraph. The proposed language stated that the alarm must operate at least 30 seconds before system discharge. Several commenters (Ex. 7: 6; 38; 49; 65; 120) suggested that the 30-second alarm is too restrictive. They indicated that 30 seconds between an alarm and discharge might allow too great a pre-burn time before flooding takes place, particularly in areas where employee egress can be completed within 30 seconds. OSHA recognizes that the purpose of a pre-discharge alarm is to assure that employees have sufficient time to evacuate the work area before the flooding system discharges. Therefore, paragraph (c)(3) is being revised to require that the alarm comply with § 1910.165 and provide sufficient time for employees to leave the area before discharge. The alarm must be perceived above ambient noise and light levels in the workplace.

OSHA has also changed the proposed language by calling the alarm a pre-discharge employee alarm rather than a pre-discharge alarm. A pre-discharge alarm may serve many functions, but a pre-discharge employee alarm notifies employees of impending discharge.

Paragraph (c)(4) of the final standard, which was proposed as paragraph (b)(16), requires the employer to provide automatic actuation of total flooding systems so that employees will have sufficient time to safely exit the discharge area.

Section 1910.161 Fixed extinguishing systems, dry chemical.

This section contains the minimum design and installation requirements which are specifically applicable to fixed extinguishing systems using dry chemical as the extinguishing agent. Dry chemical systems installed to meet a particular OSHA standard must comply with the requirements of this section and § 1910.160.

Scope and application: Paragraph (a). Paragraph (a) establishes the scope and application for these requirements to be all fixed dry chemical systems installed in accordance with § 1910.160 and required by a particular OSHA standard.

Specific requirements: Paragraph (b). In paragraph (b) of the proposal OSHA proposed the minimum requirements for fixed dry chemical systems.

In paragraph (b)(1) of the proposal, OSHA required that dry chemical agents used in combination with foam and wetting agents be approved for that use. One commenter (Ex. 7: 9) stated that the only known standards for foam/dry chemical compatibility were military specifications and that if foam compatibility is necessary, then OSHA should provide a specific method for determining it in the standard.

The purpose of the proposed language was to assure that employers use agents that will not break down or become ineffective because of incompatibility with other agents. Therefore, OSHA has changed the proposed language by requiring the employer to determine agent compatibility when the agent is purchased to assure that the combination of agents will be effective on the fire concerned. OSHA believes the changes will assure employee safety and give employers the flexibility of selecting agents without having to refer to a specific standard.

In paragraph (b)(2) OSHA proposed that dry chemicals of different compositions not be mixed together. Some commenters (Ex. 7: 33; 97) questioned the need to restrict the mixing of different types of dry chemicals. Mr. John W. Gunny stated (Ex. 7: 3 p.8): "Sodium carbonate (dry chemical) and potassium carbonate (Purple K) will mix and can be used as replacements." PPG Industries requested a clarification of the proposed language. They agreed that (Ex. 7: 97 p.2):

Systems designed for use with one chemical shall not be refilled with any other type, however, this should not be construed to mean a specific brand.

The Underwriters' Laboratories, Inc. (Ex. 7: 120) suggested that OSHA only permit the chemical stated on the nameplate of the container.

OSHA believes that intermixing of different dry chemical extinguishing agents must be prohibited where such intermixing could cause unwanted chemical reactions or produce excessive pressures within storage containers. These pressures or reactions could cause the system to operate ineffectively or not at all.

However, OSHA recognizes that certain types of equivalent compatible chemicals can be interchanged or mixed effectively within a system. Therefore, OSHA is changing the proposed language to permit the employer to use chemicals specified on the approval nameplate or those with equivalent qualities which are compatible. While OSHA encourages the use of the chemicals listed on the approval nameplate, it also recognizes that any chemical of equivalent composition and physical properties could be used and still be effective as an extinguishing agent. OSHA believes this change will provide employers with the flexibility to use equivalent materials in containers when unexpected shortages of specific brands occur.

It is important to note that while OSHA may permit the use of equivalent materials, local fire code enforcement agencies may not. Therefore, employers are encouraged to check with local authorities before making any changes in chemicals currently used in their containers.

In paragraph (b)(3) OSHA proposed a 30-second pre-discharge alarm on systems which would create obscured vision upon discharge. Some commenters (Ex. 7: 33; 49) questioned the priority for delayed discharge, which could cause larger fire spread. Other commenters (Ex. 7: 65; 87; 30; 121) suggested that the 30-second alarm was too long for some workplace systems. OSHA believes the comments reflect the problems associated with employee safety versus property protection. OSHA's primary responsibility lies with assuring that employees have sufficient time to safely evacuate discharge areas which subject them to obscured vision. If, because of delayed discharge, a possibility for greater property damage exists, then the employer may have to provide alternative fire protection systems. OSHA has decided to change the proposed language by deleting the 30-second time limit. The final standard requires that the pre-discharge alarm which must comply with § 1910.165 and which must provide sufficient time for safe egress from total flooding or local application areas where obscured vision may occur. OSHA has also changed the name of the pre-discharge alarm to "pre-discharge employee alarm" to be consistent with the term used elsewhere in the subpart.

In paragraph (b)(4) OSHA proposed a specific test for determining the formation of lumps or caking in the dry chemical agents. The purpose of the requirement is to assure that dry chemical supplies are kept free of moisture. If an employer can assure that dry chemical agents are free of moisture by some other test method, OSHA does not believe that a specific method of testing has to be required. Therefore, while the proposed test would be considered an acceptable test, OSHA has decided not to specifically require it. Therefore, OSHA has changed the proposed language to provide the employer flexibility in selecting the test method for determining that a dry chemical is free of lumps and caking.

OSHA has also added a new paragraph (b)(5) to the section that requires that the rate of agent application be sufficient to achieve the design concentration within 30 seconds. This requirement was initially proposed in § 1910.160(b)(15) as a general requirement; however, some commenters (Ex. 7: 9; 93; 120) in addressing § 1910.160(b)(15), suggested that the rates of discharge for the various classes of agents vary and that the rate should be covered in the specific section for the particular class of agent. OSHA agrees with these comments and therefore is placing the requirement for the rate of discharge for dry chemical systems in § 1910.161.

Section 1910.162 Fixed extinguishing systems, gaseous agent.

This section contains the minimum design and installation requirements for fixed extinguishing systems using gaseous agents such as carbon dioxide and Halon 1211 and 1301. Gaseous agent systems must comply with this section as well as the general requirements in § 1910.160.

Scope and application: Paragraph (a). Paragraph (a) establishes which systems are covered by this section and which requirements apply to these systems.

OSHA proposed to include the scope and application of the section in a single paragraph (a). However, OSHA has decided to exempt certain local application systems from the proposed requirements of the section. In order to specifically describe the requirements from which local application systems are exempt, OSHA has divided the proposed scope and application provisions into two paragraphs.

Paragraph (a)(1) carries forward the language from proposed paragraph (a) which states that this section applies to all fixed extinguishing systems installed in accordance with § 1910.160 and using a gaseous agent.

In paragraph (a)(2) of the final standard OSHA has required that only total flooding systems must comply with paragraphs (b)(2) and (b)(4) through (b)(7). This change is in response to the suggestions made by United Technologies (Ex. 7: 38) and the Organization Resource Counselors, Inc. (Ex. 7: 94). Paragraph (b)(2) and (b)(4) through (b)(7) are not appropriate for local application systems.

Specific requirements: Paragraph (b). Paragraph (b) contains the minimum design and installation criteria for gaseous agent systems. As described above, paragraphs (b)(2) and (b)(4) through (b)(7) apply only to total flooding systems.

Paragraph (b)(1) establishes the criteria for agents to be used in the initial supply and replenishment of fixed gaseous agents.

In paragraph (b)(2) OSHA proposed that the employer maintain gaseous agent concentrations by minimizing leakage from an enclosure or by adding extra agent. One commenter, Organization Resource Counselors, Inc. stated (Ex. 7: 94 p. A–14):

It is thereby inferred that the existing extinguishing concentration is to be sustained even after re-entry. Many employers favor ventilation before employee re-entry and they would be unable to do this if the above change were not made.

Several comments (Ex. 7: 2; 65; 93) advocated ventilating the discharge area before employees re-enter to conduct salvage and overhaul.

Once the fire is extinguished or under control, OSHA does not expect employers to maintain extinguishing concentrations when employees re-enter the discharge area for overhaul. Therefore, OSHA has changed the proposed language by adding the phrase "Except during overhaul" to the beginning of the sentence. OSHA has also changed the proposed wording by deleting the references to preventing leakage or applying extra gas because a requirement of such specific methods of maintaining proper concentrations would limit employer flexibility. OSHA does not believe that the specific methods of maintaining concentrations need to be established in the final standard.

In paragraph (b)(3) OSHA proposed that designed concentrations be achieved with the minimum generation of toxic decomposition products. OSHA has changed the proposed language to require that employees not be exposed to toxic levels of a gaseous agent or its decomposition products. Two commenters (Ex. 7: 3; 65) indicated that the proposed language was too vague and unenforceable. OSHA believes that the revised language more clearly states OSHA's intent that employers may use toxic concentrations in areas where they are necessary because of design extinguishment concentrations, but only where employee exposure will be safely controlled or prevented.

In paragraph (b)(4) of the proposal OSHA established specific design criteria for deep-seated fires and for maintaining concentrations to prevent reignition. OSHA believes that this paragraph is not necessary because the hazards are adequately covered by the performance language in paragraph (b)(2) of the final standard. Therefore, OSHA has decided to delete paragraph (b)(4).

In paragraph (b)(5) of the proposal OSHA established a maximum discharge time of 30 seconds for all fixed gaseous systems. Some comments (Ex. 7: 11; 120; 168) questioned the proposed language and suggested that OSHA recognize a 10-second time limit for certain gaseous agents such as Halon 1301. It was not OSHA's intent to specifically limit the discharge time to 30 seconds. The 30-second limit was intended to be the maximum limit; thus, any system that could reach an extinguishing concentration within 10 seconds would obviously have met the 30-second criteria. However, after reviewing the comments, OSHA has decided to change the proposed language so that, in paragraph (b)(4) of the final standard, carbon dioxide systems must reach design concentrations within 30 seconds, and Halon 1211 and 1301 systems must reach design concentration within 10 seconds. OSHA believes the 10-second limit is necessary to prevent excessive pre-burn times and it is consistent with the applicable NFPA standards.

In paragraph (b)(6) of the proposal OSHA required that the employer maintain agent concentrations for a sufficient period of time to permit emergency actions by fire brigade members. OSHA has decided to delete the proposed paragraph because final paragraph (b)(2) now provides for overhaul operations in areas where fixed systems protect the area. Several comments (Ex. 7: 2; 65; 93) support the decision to delete the proposed language since maintainance of agent concentrations will not enhance employee safety.

In paragraph (b)(7) OSHA proposed that the employer provide a pre-discharge alarm on systems that use agent concentrations exceeding the maximum safe level for the agent. OSHA further established the maximum safe levels for the various agents. Some comments (Ex. 7: 2; 11; 100) questioned the levels set by OSHA. OSHA has decided to change the proposed language by deleting the list of maximum safe levels and by clearly indicating which gaseous systems OSHA requires to be equipped with a pre-discharge alarm. The final standard (paragraph (b)(5)) requires pre-discharge alarms for those systems which have design concentrations above the maximum safe levels of agent concentration to which employees can be exposed without the use of personal protective equipment. OSHA has also changed the proposed language by changing the name of the alarm to a pre-discharge employee alarm to be consistent with the term as defined in § 1910.155 and used elsewhere in the subpart. OSHA has also changed the proposed language by requiring that the alarm provide sufficient time for employees to safely leave the area before the system discharges the agent.

In paragraph (b)(8) OSHA proposed requirements for the permissible design concentrations of Halon 1301 based on the possible time of employee exposure. There were no substantive comments which addressed the proposed language. However, OSHA has decided to change the proposed language to clearly delineate the design concentration ranges and time intervals which are permissible for Halon 1301 systems. The percentage of concentrations and the escape time intervals in the final standard (paragraph (b)(6)) are also consistent with NFPA 12A–1977 Standard on Halon 1301 systems.

In paragraph (b)(9) of the proposal OSHA prohibited the use of Halon 1211 and carbon dioxide in areas normally occupied by employees if egress cannot be accomplished in 30 seconds. OSHA had decided to delete the proposed requirement because the requirement is adequately covered by the performance language in paragraph (b)(5) of this final section.

In paragraph (b)(10) OSHA proposed specific design criteria for inerting type gaseous agents. Several commenters (Ex. 7: 18; 51; 65) suggested deleting this paragraph because the design criteria related to extinguishment concentrations are adequately covered in paragraph (b)(1) of § 1910.160. OSHA agrees and has decided to delete the proposed paragraph.

Section 1910.163 Fixed extinguishing systems, water spray and foam

This section contains the minimum design and installation requirements for extinguishing systems using water or foam solution as the extinguishing agent which are installed to comply with OSHA standards. Water spray and foam systems must comply with this section as well as the general requirements in § 1910.160. This section does not apply to automatic sprinkler systems covered by § 1910.159.

Scope and application: Paragraph (a). Paragraph (a) states that the section covers and applies to all fixed extinguishing systems using water or foam solution as the extinguishing agent which are installed to comply with a particular OSHA standard. The language also exempts automatic sprinkler systems which are covered by § 1910.159 of this subpart.

Specific requirements: Paragraph (b). In this paragraph OSHA establishes the design and installation criteria for water spray or foam extinguishing systems. These requirements are to be used together with the general requirements of § 1910.160 to regulate fixed water spray and foam extinguishing systems installed to meet a particular OSHA standard.

In paragraphs (b)(1) through (b)(5) of the proposal OSHA established rather specific design criteria for the design of water spray and foam systems. Some commenters (Ex. 7: 2; 33; 65) questioned the need for such specific requirements when performance language could effectively provide employee safety. OSHA has decided to delete proposed paragraphs (b)(1) through (b)(5) and to use a more performance oriented requirement instead, to assure employee safety. The proposed requirements being deleted are prohibitions that can be more adequately addressed in the appropriate sections of the OSHA standards which may require water spray and foam systems. These systems are generally used in areas where employee safety can be adequately assured through alternative means of fire protection or by evacuation.

In paragraph (b)(6) OSHA proposed that water spray systems be designed so that extinguishment or control can be accomplished and prevent flashback. Several commenters (Ex. 7: 58; 65; 93) suggested that preventing flashback may not always be possible, nor can an employer assure that a system will extinguish or fully control a fire in all cases. OSHA has decided to change the

proposed coverage to make it a more performance oriented requirement by requiring these systems to be so designed as to be effective in at least controlling a fire on the protected equipment or in the protected area. OSHA believes this new requirement (final paragraph (b)(1)) will provide the employer with the flexibility to design a system that can best protect employees.

In paragraph (b)(7) of the proposal OSHA required that employees assure that the drainage of water spray systems is directed away from employee work areas. OSHA has changed the proposed language by requiring the employer to assure that drainage is directed away from areas where employees are working, and that no emergency egress is directed through the drainage path.

OSHA believes that the revised provision (final paragraph (b)(2)) will improve employee safety because it further limits employee exposure to system drainage which could be carrying hazardous wastes.

Section 1910.164 Fire detection systems.

This section contains the minimum requirements for the installation, restoration, maintenance, testing and protection of fire detection systems and the criteria for response time.

Scope and application: Paragraph (a). Paragraph (a) establishes that the requirements of this section cover and apply to all automatic fire detection systems installed to meet a particular OSHA standard.

Installation and restoration: Paragraph (b). This paragraph covers the minimum requirements for the installation and restoration of fire detection systems.

In paragraph (b)(1) of the proposal OSHA required that all devices, combinations of devices, and equipment constructed and installed to comply with this section be approved. OSHA has decided to change the proposed language by deleting the phrase "combination of devices" because it could be misunderstood as requiring approval of an entire system as installed instead of just the individual elements of that system. OSHA recognizes that entire systems may not be approved or capable of being approved because no criteria exist to make such determination. OSHA believes that the phrase "devices and equipment" adequately covers the components of a system.

In paragraph (b)(2) of the proposal OSHA required that the employer restore all fire detection systems and components to operational condition as promptly as possible after each test or alarm. OSHA also proposed that spare devices and components normally destroyed in giving an alarm be kept available in sufficient quantities and locations for prompt restoration of the system. Two commenters (Ex. 7: 64; 73) suggested that the requirement to keep spare parts and devices stocked and available on plant premises be deleted. OSHA does not require the stocking of the parts in the workplace. OSHA is concerned with restoring detection systems to service as soon as possible after a test or alarm. The proposed language does not preclude the use of a local fire detection system supplier to provide the needed parts. OSHA places the responsibility of prompt restoration with the employer. Therefore, OSHA is using the proposed language as the final language for the requirement.

Maintenance and testing: Paragraph (c). This paragraph contains the minimum requirements for maintaining and testing fire detection devices.

Paragraph (c)(1) require that all systems be maintained in an operable condition except when they are undergoing repair or maintenance.

In paragraph (c)(2) of the proposal OSHA required the employer to test and adjust the sensitivity and reliability of fire detectors as often as necessary to maintain proper operating conditions. One commenter (Ex. 7: 9) suggested that the proposed language be changed to recognize that factory calibrated detectors need not be adjusted after installation. While the proposed language required that devices be adjusted only when they need it, OSHA agrees that factory calibrated detectors should not be tampered with and has changed the proposed language to remove them from coverage in the final requirement.

In paragraph (c)(3) OSHA proposed that all pneumatic and hydraulically operated detection systems be supervised. The purpose of the requirement was to assure detection of any situation which may cause the system to malfunction. Some comments (Ex. 7: 9; 49; 65; 74) questioned the need for electical supervision of all pneumatic and hydraulic systems. However, the proposed language does not limit employers to electrical supervision. OSHA believes the requirement is necessary and permits any type of supervision that will detect a failure or malfunction of the system. Therefore, OSHA is adopting the proposed language as the final requirement.

In paragraph (c)(4) OSHA proposed that the servicing, maintenance, and testing of fire detectors be done by a person trained to do the work. OSHA has decided to clarify the proposed language of (c)(4) by providing some examples of proper maintenance activities. OSHA believes this change will clarify the duties of the person who is expected to service fire detectors because it outlines the duties which must be carried out to assure the reliability of the systems. Therefore, OSHA has changed paragraph (c)(4) by adding the following in the final standard which states:

> The employer shall assure that servicing, maintenance, and testing of fire detection systems, including cleaning and sensitivity adjustments be performed by a trained person knowledgeable in the operations and functions of the system.

In paragraph (c)(5) the proposal required in the second sentence that a trained person perform the maintenance work. This sentence has been deleted because it is covered in the final language of (c)(4). Therefore the final standard paragraph (c)(5) states:

> The employers shall also assure that fire detectors that need to be cleaned of dirt, dust, or other particulates in order to be fully operational are cleaned at regular and periodic intervals.

Protection of fire detectors: Paragraph (d). This paragraph contains the requirements for protecting detectors from environmental and mechanical damage.

Paragraph (d)(1) OSHA requires fire detection equipment installed outdoors or in the presence of corrosive atmospheres to be protected from corrosion.

In paragraph (d)(2) OSHA proposed that every employer, by location or otherwise, protect detection equipment from mechanical or physical impact. One commenter (Ex. 7: 51) suggested that it is impossible to totally protect detectors from impact or mechanical damage. OSHA recognizes that detectors may be subject to occasional impact or damage; it was not the intent of the proposal to require absolute protection of every detector. OSHA is concerned about protecting detectors from such harm that might render the detectors inoperable. Therefore, this language has been added to the final standard.

Paragraph (d)(3) requires employers to mount detectors without the use of circuitry wires or tubing because such wires and tubing are not intended to support the detector, and they may break and interrupt the detector's circuit.

Response time: Paragraph (e). In paragraph (e) OSHA establishes the minimum performance criteria related to response time of detectors.

Paragraph (e)(1) requires that fire detection systems installed to actuate a fire suppression system be designed to operate in time to control or extinguish a fire. Several commenters (Ex. 7: 87; 94; 121) suggested that OSHA delete the paragraph because proposed paragraph (e)(2) covers the requirement. OSHA disagrees with the comments because proposed paragraph (e)(1) applies to detectors on extinguishing systems and paragraph (e)(2) applies to detectors on alarm systems. OSHA believes that the standard is necessary to assure that employees whose safety may depend on the timely operation of a suppression system are properly protected.

Paragraph (e)(2) requires that detection systems installed for the purpose of activating the employee alarm for evacuation be installed to allow sufficient time for safe escape of employees.

OSHA has decided to substitute the phrase "provide a warning for employee action" for the phrase "allow sufficient time" because it is difficult to specify what "sufficient" means in this context. OSHA also believes that the substitution will provide the employer with options other than escape when a warning for employee action is given.

In paragraph (e)(3) OSHA proposed that alarms or devices initiated by detector actuation not be delayed for more than 30 seconds unless the delay is necessary for immediate safety of employees. OSHA proposed that in cases where extensive delay is necessary, the emergency action plan must assure that employees be notified, or extinguishment be actuated in sufficient time to assure employee safety. OSHA has changed the proposed language which required the emergency action plan to address employee notification and extinguishing system activation. The standard now requires that any necessary delay be addressed in an emergency action plan meeting the requirements of § 1910.38. OSHA believes this change will improve the requirement in that all aspects of the delay, including but not limited to employee notification and system activation, are to be addressed in the plan. The reference to § 1910.38 makes clear what OSHA requires in emergency action plans.

Number, location and spacing of detecting devices: Paragraph (f).

Paragraph (f) requires the employer to assure that spacing, location, and numbers of detectors are based upon design criteria obtained from field experience or testing, engineering surveys, the manufacturer's recommendations or a recognized testing laboratory's listing.

Section 1910.165 Employee alarm systems.

This section contains the minimum requirements for the design, installation, restoration and manual actuation of all types of emergency employee alarm systems installed to meet a particular OSHA standard. The section's maintenance, testing and inspection criteria also apply to all local fire alarm signaling systems used to alert employees of fires in the workplace regardless of the other functions of the system. This section applies only to those employee alarm systems which warn employees of emergencies, such as fires, tornadoes, toxic atmospheres, etc. This section is not intended to apply to warning alarm systems such as back-up alarms, alarms used on cranes, etc.

Scope and application: Paragraph (a). This paragraph establishes which alarm systems are regulated by the requirements of this section and the requirements that apply to those regulated systems.

In paragraph (a)(1) OSHA proposed that the section apply to all emergency alarms or alarm systems installed to meet a particular OSHA standard. OSHA proposed to exempt those pre-discharge, discharge or supervisory alarms required on various fixed extinguishing or other fire protection systems because they were adequately covered in the specific fire suppression system section. OSHA is changing the proposed language to clarify the scope of the requirements as follows: First, OSHA has deleted the term "pre-discharge" from the exemption since that type of alarm is an employee alarm system used with specific fire suppression systems required by various sections in Subpart L. Requirements for pre-discharge alarms will be contained in new paragraph (a)(3) of this section. Second, OSHA has added the phrase "unless they are intended to be employee alarm systems" to the end of the paragraph which exempts various types of alarms, such as those used only to alert maintenance personnel. OSHA believes this change will clarify the scope of the section which is to cover all alarm systems intended to provide employees with a warning that some emergency action by them is necessary.

Paragraph (a)(2) provides that the requirements of the section apply to all local fire alarm signaling systems used for alerting employees regardless of the system's other purposes.

Paragraph (a)(3) has been added to this section to clarify that there are certain requirements of this section which apply to pre-discharge alarms. All pre-discharge employee alarms installed to meet a particular OSHA standard must meet the following requirements of this section: the general requirements of paragraphs (b)(1) through (b)(4), the installation and restoration requirements of paragraph (c), and the maintenance requirements of paragraph (d)(1).

General requirements: Paragraph (b). This paragraph contains the minimum requirements for the design criteria of employee alarm systems covered by this section.

In paragraph (b)(1) OSHA proposed that the employer provide employees with an alarm system that would give them time to safely escape from a life threatening emergency. There were no substantive comments which addressed the proposed language; however, OSHA has decided to change the proposed language to clarify the requirement: First, OSHA has deleted the language "employees with" from the proposal because the requirement is intended to require that the employer provide an alarm, not that the employer provide an alarm to employees. Second, OSHA has reworded the proposed language by changing the second description of the time criteria for the alarm. OSHA proposed that the alarm provide sufficient reaction time to safely evacuate from a life threatening emergency. OSHA has decided to clarify the requirement and provide additional options to the employer. OSHA now requires that the alarm provide employees with a warning to take appropriate emergency actions which may or may not include evacuation. OSHA believes the two changes made to the proposed language will better explain the intent of the requirement and provide an alternative to those employers who may prefer actions short of evacuation when the alarm is given. OSHA has also added the term "immediate work area" to the final language so that different plans can be developed for the various portions of large workplaces. The final paragraph (b)(1) states: "The alarm system shall provide warning for necessary emergency action as called for in the emergency action plan, or for reaction time for safe escape of employees from the workplace or the immediate work area, or both."

Paragraph (b)(2) requires that employee alarms be capable of being perceived above ambient noise and light levels, and allows tactile devices, such as electric fans, to be used when necessary.

Paragraph (b)(3) of the proposal provided that employee alarms be distinctive and recognizable to employees as signals to perform actions

designated in the emergency action plan. OSHA has decided to adopt the proposed language with minor corrections as the final requirement. In addition, OSHA does not intend that the final requirement mean that each signal must be generated by a separate device or system; rather, OSHA will recognize a single system with distinctive code signals or a voice communication system.

In Paragraph (b)(4) OSHA proposed that the employer explain the preferred means of reporting emergencies to employees and that emergency telephone numbers be posted. One commenter (Ex. 7: 150) recommended that OSHA accept, in addition to telephones and manual pull box devices, the use of portable radios as a satisfactory method to initiate an employee alarm system. OSHA has clarified the proposed language in this regard by specifically listing public address systems and radios as other alternative means of reporting emergencies. OSHA has also changed the proposed language by requiring that emergency telephone numbers be posted only when telephones are used. The proposed language implied that telephone numbers had to be posted even when telephones were not included in the plan as a means of reporting emergencies. The purpose of this requirement is to assure that multi-use communication systems be operated to allow emergency messages to have priority over all non-emergency messages.

OSHA has decided to add a new paragraph (b)(5) to the final standard to provide direct voice communication as an alternative means of giving alarms in small workplaces. This area that was not adequately discussed in the proposal. The new paragraph gives the employer greater flexibility in complying with OSHA standards.

Paragraph (b)(5) permits employers with 10 or fewer employees to use direct voice communication, without a back-up system, as an acceptable alternative for sounding an alarm. Several commenters (Ex. 7: 33; 43; 66; 72; 97; 98) supported the use of alternative methods for sounding alarms in their comments addressing Issue 17. Issue 17 asked whether OSHA should allow alternatives to manual pull box alarms such as whistles, voice, visual or tactile communication systems. The comments supported the use of alternative alarm methods as long as the methods are reliable and recognized by employees. OSHA believes that the new paragraph recognizes the work environment found in small workplaces where direct voice communication is often the quickest and most recognized source of alarm.

Installation and restoration: Paragraph (c). Paragraph (c) contains the minimum requirements for the installation and restoration of alarm systems.

Paragraph (c)(1) requires that the components, devices, and systems constructed and installed to comply with the requirements of this standard be approved. Alternative signaling devices such as air horns and strobe lights not generally "approved" are also acceptable.

In paragraph (c)(2) OSHA proposed that all systems be restored to normal operating condition as promptly as possible after each use or test. OSHA also proposed to require a stock of spare parts or devices to be maintained in the workplace. Several commenters (Ex. 7: 73; 93; 113; 148) suggested that the employer be able to use the services of a local contractor or supply store to provide service, parts, spare devices and components. OSHA believes that it is the employer's responsibility to return the system to operating condition as promptly as possible and in a manner the employer finds appropriate. In many workplaces where local suppliers can meet the need promptly, this may not require the stockpiling of spare parts. Therefore, OSHA has changed the proposed language by deleting the requirement that spare parts be stocked in the workplace and by changing the provision to require that the parts be available in sufficient quantities and locations for prompt restoration of the system.

Maintenance and testing: Paragraph (d). Paragraph (d) contains the minimum requirements for the maintenance and testing of employee alarm systems.

Paragraph (d)(1) requires that all employee alarm systems be maintained in operable condition except when undergoing repairs or maintenance.

In paragraph (d)(2) OSHA proposed that employee alarm systems be tested for reliability and adequacy at bi-monthly intervals. OSHA also proposed that a different actuation device be used for each test.

Several commenters (Ex. 7: 11; 73; 74; 87; 121) suggested changes to the proposed language. One commenter (Ex. 7: 73) advocated that supervised employee alarm systems do not need to be tested with the same frequency as those systems which are not supervised. Another comment (Ex. 7: 11) asked what is to be done if the alarm system has only one actuation device. OSHA has decided to clarify the final requirement by changing the proposed language. First, OSHA has changed the paragraph to clarify that only non-supervised employee alarm systems are covered. It is not OSHA's intent to require that supervised systems be tested as frequently as non-supervised systems, as presented in paragraph (d)(4). Second, OSHA has changed the word "bi-monthly" to read "every two months" to avoid confusion. Third, OSHA has added the phrase "of a multi-actuation device system" to the final requirement to emphasize that OSHA is also concerned about those systems with more than one actuation device. OSHA believes that these three changes in the final standard will clarify the meaning and purpose of the requirement.

Paragraph (d)(3) requires that the employer keep power supplies of alarm systems fully operational.

In paragraph (d)(4) OSHA proposed that all alarm systems installed after July 1, 1980, be supervised. Two commenters (Ex. 7: 51; 114) suggested that it may not be possible to supervise all alarm systems because of their design and method of operation. OSHA has changed the proposed language to provide that only employee alarm circuitry capable of being supervised is required to be supervised and to extend the date of compliance to July 1, 1981. The new language will assure that system circuitry capable of being supervised is operational and capable of transmitting alarm signals and that employers are given a sufficient time to comply with the final standards. OSHA has also established an annual test requirement for supervised employee alarm systems to assure their reliability. This is in recognition of the comment (Ex. 7: 11) presented in the earlier discussion of paragraph (d)(2). OSHA believes that an annual test is necessary to assure the reliability of the entire system. The new requirement is consistent with other test criteria in the subpart and it further adds to employee safety by assuring the reliability of the system.

Paragraph (d)(5) requires that all servicing, testing and maintenance of employee alarm systems be done by trained persons.

Manual operation: Paragraph (e). Paragraph (e) contains the requirements for the location and accessibility of manual actuation devices.

In paragraph (e)(1) OSHA proposed that manually operated pull boxes be mounted so that they are unobstructed, conspicuous, and readily accessible. OSHA also proposed to limit the travel distances to the pull boxes to 200 feet. Several commenters (Ex 7: 54; 65; 66; 87; 121; 160) suggested that the 200-foot travel distance requirement for pull-box

stations is too specific and should be replaced with a performance oriented standard. OSHA has decided to change the proposed language by deleting the specific travel distance limit. This change reflects OSHA's intention that the pull boxes be readily accessible, without setting a required distance.

However, OSHA has decided to include the 200-foot travel distance recommendation in the appendix. OSHA has also used the term "manually operated actuation devices" in the final requirement rather than "manually operated pull-boxes" because there may be types of actuation devices other than pull-boxes. OSHA believes that these specific changes to the final standard will clarify the requirements.

In paragraph (e)(2) of the proposal OSHA required that pull-boxes be approved. OSHA has decided to delete the proposed language because the approval of alarm system components is adequately covered in paragraph (c)(1) of this section.

IV. Regulatory Assessment

Executive Order No. 12044 (43 FR 12661, March 24, 1978), directs regulatory agencies to simplify and clarify regulations and to minimize compliance costs, paperwork and other burdens. Section 4 of the Executive Order requires review of existing regulations in order to simplify language, reduce regulatory burdens, assure conformance with new and evolving technologies, and to eliminate overlapping and duplicative requirements.

The revised standard reduces burdens and is not a "major" action as defined by the Executive Order and by economic identification criteria contained in Department of Labor Guidelines for improving Government regulations (44 FR 5575, January 26, 1979).

JRB Associates, Inc., has prepared an economic assessment for OSHA entitled "Economic Impact Assessment of 29 CFR Part 1910 Subpart L—Fire Protection." The study includes assessment of the technological feasibility of compliance as well as an estimate of compliance costs. The effects on other variables, such as employment productivity and market structures, are considered.

According to the study, compliance costs are not expected to exceed $20 million for any of the years 1979–1983. In 1984, compliance costs are expected to peak at $21 million, but after 1984, these costs will decline considerably. The study concludes that at present time, compliance with the proposed standard is both economically and technically feasible. Additionally, the proposed modifications to Subpart L are not expected to have any other economic impact that might be considered major. Due to training requirements, the proposed standard could possibly result in a marginal increase in employment. This effect will not be significant when distributed across the entire economy. No significant market structure effects are projected from the regulatory restraints proposed on certain products. The study therefore concludes that, based on data available at the time of the analysis, the proposed changes will not have a major economic impact as defined by Executive Order 12044 and criteria proposed by the Department of Labor pursuant to this order.

Several commenters (Ex. 7: 33; 74; 88; 108) challenged the study findings and stated their belief that the cost of compliance estimates were too low. Reasons given by these commenters were based on (1) the additional wage costs of company paid firemen who would have no other duties and (2) the cost of conforming all fire protection systems to the proposed standard.

Although these issues were raised during the rulemaking, the revised standard does not prohibit the assignment of other duties to employees who are members of company fire brigades nor does it require that employers have fire brigades. Therefore, the cost estimates contained in the economic impact assessment are considered reasonable.

Concern that compliance costs were understated also arose from the misunderstanding that all fire protection systems are covered by the standards. The standards do not apply to systems designed to protect property or the general public. The cost estimates in the economic assessment were properly determined solely upon the application of the standards to employee safety and health in the workplace.

The economic impact assessment has identified several benefits that will be realized as a result of promulgation of the proposed changes to Subpart L. Some changes are intended to reduce accidents; others give the employer added flexibility. For example, the proposed regulation will prohibit the use of carbon tetrachloride and chlorobromomethane fire extinguishers in OSHA regulated workplaces. This will prevent injuries related to the discharge of toxic substances from fire extinguishers. The proposed regulation also requires the replacement of soda-acid and inverting foam extinguishers. Thus, these extinguishers, which have a tendency to rupture in testing or while in use, will be prevented from causing injuries. Further, the initial replacement cost of these extinguishers will be offset by long-run savings in reduced maintenance costs of the new extinguishers and in the scrap value of the old ones.

The revised regulation provides for training and equipment for worker protection for those employees who are assigned as fire brigade members to fight interior structural fires. This is expected to reduce the number of injuries to employees involved in fire fighting.

The revised regulation includes several relaxations of current requirements which will provide added flexibility and possible additional cost savings. These include the exemption from portable fire extinguisher requirements for some employers; and the fact that most sprinkler systems, other fixed systems, employee alarm systems and fire detection systems which are not installed to meet other OSHA regulations are not covered by the revised standards in Subpart L.

Although it is not possible to compare the estimated cost of compliance to quantifiable benefits, it is possible to compare the estimated cost of compliance to the cost of fire losses in OSHA regulated workplaces. The National Association of Fire Equipment Distributors estimates 87 percent of fire incidents that workers extinguish are not reported to public fire departments. For the fires that are reported, the National Fire Protection Association estimates U.S. structural fires and property loss by property use. Based on NFPA statistics for 1977, it has been determined that $2.242 billion in property losses were incurred by OSHA regulated workplaces during that period. Therefore, estimated compliance costs for these regulations are less than 1 percent of the 1977 estimated property loss as a result of structural fires. Thus, if a 1 percent reduction in total fire losses can be realized, the estimated cost of the regulation is completely offset. In addition to reducing injuries associated with fire fighting, the regulation will also have a positive effect in the control of fires by increasing the reliability of fire extinguishers and by providing for fire brigades that are better equipped and trained.

Before the proposal was published, OSHA concluded that the subject matter of this proposal was not a "major" action which would necessitate the preparation of a Regulatory Analysis (43 FR 60062). In the development of the final standard, based on a review of the JRB document and the record as a whole, OSHA has determined that this

final standard is not a "major" action under E.O. 12044 and the Secretary's guidelines (44 FR 5575, January 26, 1979).

The assessment is available for inspection and copying at the OSHA Docket Office, Room S6212, Frances Perkins Department of Labor Building, Third Street and Constitution Avenue, NW., Washington, D.C. 20210.

V. Effective Date

The effective date is December 11, 1980. The 90 day period between the issuance of the standards and their effective date is intended to provide sufficient time for employers and employees to become informed of the existence of the standards and their requirements.

The standards currently found in §§ 1910.35–1910.38, §§ 1910.107–1910.109, and the existing Subpart L (1910.156–1910.165(b)), will remain in effect until the standards contained in this document actually go into effect. Should the new standards be stayed, judicially or administratively, or should the standards not sustain legal challenge under section 6(f) of the Act, the current standards in §§ 1910.35–1910.38, §§ 1910.107–1910.109, and Subpart L will remain in effect.

Any petitions for administrative reconsiderations of these standards or for an administrative stay pending judicial review must be filed with the Assistant Secretary of Labor for Occupational Safety and Health within 45 days of the publication of these standards in the Federal Register. Any petitions filed after this date will be considered to be filed untimely. This requirement is considered essential to permit the Agency to give full consideration to each petition and respond in advance of the effective date of the standards.

VI. Appendices

Six appendices have been included in this final standard for informational purposes. The purpose of the appendices is to provide guidelines for employers who wish to know specifically what constitutes compliance with the performance standards. In addition, the appendices contain other information which may assist employers in providing fire protection. If an employer complies with the specific guidelines in the appendices, that employer will be considered in compliance with the performance standards. At the same time, an employer may be in compliance with the standard although not complying with the specific requirements of the guidelines. In construing the meaning of the performance language in the standards in circumstances where the employer chooses not to comply with the specific provisions of the guidelines, OSHA will look at the specific guidelines among other things to determine whether the employer has complied with the standards' performance requirements. However, nothing contained in the appendices should be construed as establishing a mandatory requirement not otherwise imposed by the standard, or as detracting from an obligation which the standard does impose. In view of the nature of the appendices, changes in their contents may subsequently be made without rulemaking.

The information in the Appendix to Subpart E addresses employee emergency plans and fire prevention plans. Appendix A to Subpart L contains information to assist employers in complying with the requirements of Subpart L. Appendix B to Subpart L presents a cross index of national consensus standards which may be used to assist in compliance with specific sections in Subpart L. Appendix C to Subpart L is a listing of documents that employers may refer to for additional information. Appendix D to Subpart L contains information concerning the availability of publications incorporated by reference into the standard. Appendix E to Subpart L contains test methods for determining if protective clothing affords the required level of protection.

VII. Authority

This document was prepared under the direction of Eula Bingham, Assistant Secretary of Labor for Occupational Safety and Health, U.S. Department of Labor, Third Street and Constitution Avenue, N.W., Washington, D.C. 20210.

Accordingly, pursuant to section 4(b)(2), 6(b) and 8(c) of the Occupational Safety and Health Act of 1970 (84 Stat. 1592, 1593, 1599; 29 U.S.C. 653, 655, 657), Secretary of Labor's Order No. 8–76 (41 FR 25059), and 29 CFR Part 1911, Part 1910 of Title 29, Code of Federal Regulations is amended as set forth below.

Signed at Washington, D.C., this 4th day of September, 1980.

Eula Bingham,

Assistant Secretary of Labor.

Part 1910 of Title 29 of the Code of Federal Regulations is amended as follows:

1. Section 1910.35 is amended by adding new paragraphs (i) and (j) to read as follows:

§ 1910.35 Definitions.

* * * * *

(i) "Emergency action plan" means a plan for a workplace, or parts thereof, describing what procedures the employer and employees must take to ensure employee safety from fire or other emergencies.

(j) "Emergency escape route" means the route that employees are directed to follow in the event they are required to evacuate the workplace or seek a designated refuge area.

2. Paragraph (n) of § 1910.37 is revised to read as follows:

§ 1910.37 Means of egress, general.

* * * * *

(n) *Fire alarm signaling systems.* The employer shall assure that fire alarm signaling systems are maintained and tested in accordance with the requirements of § 1910.165(d).

* * * * *

3. The heading for the existing § 1910.38 is deleted and a new § 1910.38 is added to read as follows:

§ 1910.38 Employee emergency plans and fire prevention plans.

(a) *Emergency action plan.* (1) *Scope and application.* This paragraph (a) applies to all emergency action plans required by a particular OSHA standard. The emergency action plan shall be in writing (except as provided in the last sentence of paragraph (a)(5)(iii) of this section) and shall cover those designated actions employers and employees must take to ensure employee safety from fire and other emergencies.

(2) *Elements.* The following elements, at a minimum, shall be included in the plan:

(i) Emergency escape procedures and emergency escape route assignments;

(ii) Procedures to be followed by employees who remain to operate critical plant operations before they evacuate;

(iii) Procedures to account for all employees after emergency evacuation has been completed;

(iv) Rescue and medical duties for those employees who are to perform them;

(v) The preferred means of reporting fires and other emergencies; and

(vi) Names or regular job titles of persons or departments who can be contacted for further information or explanation of duties under the plan.

(3) *Alarm system.* (i) The employer shall establish an employee alarm system which complies with § 1910.165.

(ii) If the employee alarm system is used for alerting fire brigade members, or for other purposes, a distinctive signal for each purpose shall be used.

(4) *Evacuation.* The employer shall establish in the emergency action plan the types of evacuation to be used in emergency circumstances.

(5) *Training.* (i) Before implementing the emergency action plan, the employer shall designate and train a sufficient number of persons to assist in the safe and orderly emergency evacuation of employees.

(ii) The employer shall review the plan with each employee covered by the plan at the following times:

(A) Initially when the plan is developed,

(B) Whenever the employee's responsibilities or designated actions under the plan change, and

(C) Whenever the plan is changed.

(iii) The employer shall review with each employee upon initial assignment those parts of the plan which the employee must know to protect the employee in the event of an emergency. The written plan shall be kept at the workplace and made available for employee review. For those employers with 10 or fewer employees the plan may be communicated orally to employees and the employer need not maintain a written plan.

(b) *Fire prevention plan.* (1) *Scope and application.* This paragraph (b) applies to all fire prevention plans required by a particular OSHA standard. The fire prevention plan shall be in writing, except as provided in the last sentence of paragraph (b)(4)(ii) of this section.

(2) *Elements.* The following elements, at a minimum, shall be included in the fire prevention plan:

(i) A list of the major workplace fire hazards and their proper handling and storage procedures, potential ignition sources (such as welding, smoking and others) and their control procedures, and the type of fire protection equipment or systems which can control a fire involving them;

(ii) Names or regular job titles of those personnel responsible for maintenance of equipment and systems installed to prevent or control ignitions or fires; and

(iii) Names or regular job titles of those personnel responsible for control of fuel source hazards.

(3) *Housekeeping.* The employer shall control accumulations of flammable and combustible waste materials and residues so that they do not contribute to a fire emergency. The housekeeping procedures shall be included in the written fire prevention plan.

(4) *Training.* (i) The employer shall apprise employees of the fire hazards of the materials and processes to which they are exposed.

(ii) The employer shall review with each employee upon initial assignment those parts of the fire prevention plan which the employee must know to protect the employee in the event of an emergency. The written plan shall be kept in the workplace and made available for employee review. For those employers with 10 or fewer employees, the plan may be communicated orally to employees and the employer need not maintain a written plan.

(5) *Maintenance.* The employer shall regularly and properly maintain, according to established procedures, equipment and systems installed on heat producing equipment to prevent accidental ignition of combustible materials. The maintenance procedures shall be included in the written fire prevention plan.

4. Paragraph (f)(1) of § 1910.107 is amended to read as follows:

§ 1910.107 Spray finishing using flammable and combustible materials.

* * * * *

(f) *Protection.* (1) *Conformance.* In sprinklered buildings, the automatic sprinkler system in rooms containing spray finishing operations shall conform to the requirements of § 1910.159. In unsprinklered buildings where sprinklers are installed only to protect spraying areas, the installation shall conform to such standards insofar as they are applicable. Sprinkler heads shall be located so as to provide water distribution throughout the entire booth.

* * * * *

5. Paragraphs (g)(1) and (g)(2) of § 1910.108 are amended to read as follows:

§ 1910.108 Dip tanks containing flammable or combustible liquids.

* * * * *

(g) *Extinguishment.* (1) *Extinguishers.* Areas in the vicinity of dip tanks shall be provided with manual fire extinguishers suitable for flammable and combustible liquid fires, conforming to § 1910.157.

(2) *Automatic water spray extinguishing systems.* Automatic water spray extinguishing systems shall conform to § 1910.163 and shall be arranged to protect tanks, drainboards, and stock over drainboards.

6. The introductory clause of paragraph (g)(3) of § 1910.108 is amended to read as follows:

(g) * * *

(3) *Automatic foam extinguishing systems.* Automatic foam extinguishing systems shall conform to § 1910.163 and;

* * *

7. Paragraphs (g)(4) and (g)(5) of § 1910.108 are amended to read as follows:

§ 1910.108 Dip tanks containing flammable or combustible liquids.

* * * * *

(g) *Extinguishment.* * * *

(4) *Automatic carbon dioxide systems.* Automatic carbon dioxide systems shall conform to § 1910.162 and shall be arranged to protect both dip tanks and drainboards, and unless stock over drainboards is otherwise protected with automatic extinguishing facilities shall also be arranged to protect such stock.

(5) *Dry chemical extinguishing systems.* Dry chemical extinguishing systems shall conform to § 1910.161 and shall be arranged to protect both dip tanks and drainboards, and unless stock over drainboards is otherwise protected with automatic extinguishing facilities, they shall also be arranged to protect such stock.

* * * * *

8. Paragraphs (i)(7)(i) and (i)(7)(ii)(*a*) of § 1910.109 are amended to read as follows:

§ 1910.109 Explosives and blasting agents.

* * * * *

(i) *Storage of ammonium nitrate.*

* * *

(7) *Fire protection.* (i) Not more than 2,500 tons (2270 tonnes) of bagged ammonium nitrate shall be stored in a building or structure not equipped with an automatic sprinkler system. Sprinkler systems shall be of the approved type and installed in accordance with § 1910.159.

(ii)(*a*) Suitable fire control devices such as small hose or portable fire extinguishers shall be provided throughout the warehouse and in the loading and unloading areas. Suitable fire control devices shall comply with the requirements of §§ 1910.157 and 1910.158.

* * * * *

9. Existing § 1910.156 is renumbered § 1910.155 and is revised to read as follows:

§ 1910.155 Scope, application and definitions applicable to this subpart.

(a) *Scope.* This subpart contains requirements for fire brigades, and all portable and fixed fire suppression equipment, fire detection systems, and fire or employee alarm systems installed to meet the fire protection requirements of 29 CFR Part 1910.

(b) *Application.* This subpart applies to all employments except for maritime, construction, and agriculture.

(c) *Definitions applicable to this subpart.* (1) "After-flame" means the time a test specimen continues to flame after the flame source has been removed.

(2) "Aqueous film forming foam (AFFF)" means a fluorinated surfactant with a foam stabilizer which is diluted with water to act as a temporary barrier to exclude air from mixing with the fuel vapor by developing an aqueous film on the fuel surface of some hydrocarbons which is capable of suppressing the generation of fuel vapors.

(3) "Approved" means acceptable to the Assistant Secretary under the following criteria:

(i) If it is accepted, or certified, or listed, or labeled or otherwise determined to be safe by a nationally recognized testing laboratory, such as, but not limited to, Underwriters' Laboratories, Inc. or the Factory Mutual System; or

(ii) With respect to an installation or equipment of a kind which no nationally recognized testing laboratory accepts, certifies, lists, labels, or determines to be safe, if it is inspected or tested by another Federal agency and found in compliance with the provisions of the applicable National Fire Protection Association Fire Code; or

(iii) With respect to custom-made equipment or related installations which are designed, fabricated for, and intended for use by its manufacturer on the basis of test data which the employer keeps and makes available for inspection to the Assistant Secretary.

(iv) For the purposes of paragraph (c)(3) of this section:

(A) Equipment is listed if it is of a kind mentioned in a list which is published by a nationally recognized testing laboratory which makes periodic inspections of the production of such equipment and which states that such equipment meets nationally recognized standards or has been tested and found safe for use in a specified manner;

(B) Equipment is labeled if there is attached to it a label, symbol, or other identifying mark of a nationally recognized testing laboratory which makes periodic inspections of the production of such equipment, and whose labeling indicates compliance with nationally recognized standards or tests to determine safe use in a specified manner;

(C) Equipment is accepted if it has been inspected and found by a nationally recognized testing laboratory to conform to specified plans or to procedures of applicable codes; and

(D) Equipment is certified if it has been tested and found by a nationally recognized testing laboratory to meet nationally recognized standards or to be safe for use in a specified manner or is of a kind whose production is periodically inspected by a nationally recognized testing laboratory, and if it bears a label, tag, or other record of certification.

(4) "Assistant Secretary" means the Assistant Secretary of Labor for Occupational Safety and Health or designee.

(5) "Automatic fire detection device" means a device designed to automatically detect the presence of fire by heat, flame, light, smoke or other products of combustion.

(6) "Buddy-breathing device" means an accessory to self-contained breathing apparatus which permits a second person to share the same air supply as that of the wearer of the apparatus.

(7) "Carbon dioxide" means a colorless, odorless, electrically nonconductive inert gas (chemical formula CO_2) that is a medium for extinguishing fires by reducing the concentration of oxygen or fuel vapor in the air to the point where conbustion is impossible.

(8) "Class A fire" means a fire involving ordinary combustible materials such as paper, wood, cloth, and some rubber and plastic materials.

(9) "Class B fire" means a fire involving flammable or combustible liquids, flammable gases, greases and similar materials, and some rubber and plastic materials.

(10) "Class C fire" means a fire involving energized electrical equipment where safety to the employee requires the use of electrically nonconductive extinguishing media.

(11) "Class D fire" means a fire involving combustible metals such as magnesium, titanium, zirconium, sodium, lithium and potassium.

(12) "Dry chemical" means an extinguishing agent composed of very small particles of chemicals such as, but not limited to, sodium bicarbonate, potassium bicarbonate, urea-based potassium bicarbonate, potassium chloride, or monoammonium phosphate supplemented by special treatment to provide resistance to packing and moisture absorption (caking) as well as to provide proper flow capabilities. Dry chemical does not include dry powders.

(13) "Dry powder" means an compound used to extinguish or control Class D fires.

(14) "Education" means the process of imparting knowledge or skill through systematic instruction. It does not require formal classroom instruction.

(15) "Enclosed structure" means a structure with a roof or ceiling and at least two walls which may present fire hazards to employees, such as accumulations of smoke, toxic gases and heat, similar to those found in buildings.

(16) "Extinguisher classification" means the letter classification given an extinguisher to designate the class or classes of fire on which an extinguisher will be effective.

(17) "Extinguisher rating" means the numerical rating given to an extinguisher which indicates the extinguishing potential of the unit based on standardized tests developed by Underwriters' Laboratories, Inc.

(18) "Fire brigade" (private fire department, industrial fire department) means an organized group of employees who are knowledgeable, trained, and skilled in at least basic fire fighting operations.

(19) "Fixed extinguishing system" means a permanently installed system that either extinguishes or controls a fire at the location of the system.

(20) "Flame resistance" is the property of materials, or combinations of component materials, to retard ignition and restrict the spread of flame.

(21) "Foam" means a stable aggregation of small bubbles which flow freely over a burning liquid surface and form a coherent blanket which seals combustible vapors and thereby extinguishes the fire.

(22) "Gaseous agent" is a fire extinguishing agent which is in the gaseous state at normal room temperature and pressure. It has low viscosity, can expand or contract with changes in pressure and temperature, and has the ability to diffuse readily and to distribute itself uniformly throughout an enclosure.

(23) "Halon 1211" means a colorless, faintly sweet smelling, electrically nonconductive liquefied gas (chemical formula $CBrClF_2$) which is a medium for extinguishing fires by inhibiting the chemical chain reaction of fuel and oxygen. It is also known as bromochlorodifluoromethane.

(24) "Halon 1301" means a colorless, odorless, electrically nonconductive gas (chemical formula $CBrF_3$) which is a medium for extinguishing fires by inhibiting the chemical chain reaction of fuel and oxygen. It is also known as bromotrifluoromethane.

(25) "Helmet" is a head protective device consisting of a rigid shell, energy absorption system, and chin strap intended to be worn to provide protection for the head or portions thereof, against impact, flying or falling objects, electric shock, penetration, heat and flame.

(26) "Incipient stage fire" means a fire which is in the initial or beginning stage and which can be controlled or extinguished by portable fire extinguishers, Class II standpipe or small hose systems without the need for protective clothing or breathing apparatus.

(27) "Inspection" means a visual check of fire protection systems and equipment to ensure that they are in place, charged, and ready for use in the event of a fire.

(28) "Interior structural fire fighting" means the physical activity of fire suppression, rescue or both, inside of buildings or enclosed structures which are involved in a fire situation beyond the incipient stage.

(29) "Lining" means a material permanently attached to the inside of the outer shell of a garment for the purpose of thermal protection and padding.

(30) "Local application system" means a fixed fire suppression system which has a supply of extinguishing agent, with nozzles arranged to automatically discharge extinguishing agent directly on the burning material to extinguish or control a fire.

(31) "Maintenance" means the performance of services on fire protection equipment and systems to assure that they will perform as expected in the event of a fire. Maintenance differs from inspection in that maintenance requires the checking of internal fittings, devices and agent supplies.

(32) "Multipurpose dry chemical" means a dry chemical which is approved for use on Class A, Class B and Class C fires.

(33) "Outer shell" is the exterior layer of material on the fire coat and protective trousers which forms the outermost barrier between the fire fighter and the environment. It is attached to the vapor barrier and liner and is usually constructed with a storm flap, suitable closures, and pockets.

(34) "Positive-pressure breathing apparatus" means self-contained breathing apparatus in which the pressure in the breathing zone is positive in relation to the immediate environment during inhalation and exhalation.

(35) "Pre-discharge employee alarm" means an alarm which will sound at a set time prior to actual discharge of an extinguishing system so that employees may evacuate the discharge area prior to system discharge.

(36) "Quick disconnect valve" means a device which starts the flow of air by inserting of the hose (which leads from the facepiece) into the regulator of self-contained breathing apparatus, and stops the flow of air by disconnection of the hose from the regulator.

(37) "Sprinkler alarm" means an approved device installed so that any waterflow from a sprinkler system equal to or greater than that from single automatic sprinkler will result in an audible alarm signal on the premises.

(38) "Sprinkler system" means a system of piping designed in accordance with fire protection engineering standards and installed to control or extinguish fires. The system includes an adequate and reliable water supply, and a network of specially sized piping and sprinklers which are interconnected. The system also includes a control valve and a device for actuating an alarm when the system is in operation.

(39) "Standpipe systems". (i) "Class I standpipe system" means a 2½" (6.3 cm) hose connection for use by fire departments and those trained in handling heavy fire streams.

(ii) "Class II standpipe system" means a 1½" (3.8 cm) hose system which provides a means for the control or extinguishment of incipient stage fires.

(iii) "Class III standpipe system" means a combined system of hose which is for the use of employees trained in the use of hose operations and which is capable of furnishing effective water discharge during the more advanced stages of fire (beyond the incipient stage) in the interior of workplaces. Hose outlets are available for both 1½" (3.8 cm) and 2½" (6.3 cm) hose.

(iv) "Small hose system" means a system of hose ranging in diameter from ⅝" (1.6 cm up to 1½" (3.8 cm) which is for the use of employees and which provides a means for the control and extinguishment of incipient stage fires.

(40) "Total flooding system" means a fixed suppression system which is arranged to automatically discharge a predetermined concentration of agent into an enclosed space for the purpose of fire extinguishment or control.

(41) "Training" means the process of making proficient through instruction and hands-on practice in the operation of equipment, including respiratory protection equipment, that is expected to be used and in the performance of assigned duties.

(42) "Vapor barrier" means that material used to prevent or substantially inhibit the transfer of water, corrosive liquids and steam or other hot vapors from the outside of a garment to the wearer's body.

10. The existing § 1910.164 is renumbered to § 1910.156 and revised to read as follows:

§ 1910.156 Fire brigades.

(a) *Scope and application.* (1) *Scope.* This section contains requirements for the organization, training, and personal protective equipment of fire brigades whenever they are established by an employer.

(2) *Application.* The requirements of this section apply to fire brigades, industrial fire departments and private or contractual type fire departments. Personal protective equipment requirements apply only to members of fire brigades performing interior structural fire fighting. The requirements of this section do not apply to airport crash rescue or forest fire fighting operations.

(b) *Organization.* (1) *Organizational statement.* The employer shall prepare and maintain a statement or written policy which establishes the existence of a fire brigade; the basic organizational structure; the type, amount, and frequency of training to be provided to fire brigade members; the expected number of members in the fire brigade; and the functions that the fire brigade is to perform at the workplace. The organizational statement shall be available for inspection by the Assistant Secretary and by employees or their designated representatives.

(2) *Personnel.* The employer shall assure that employees who are expected to do interior structural fire fighting are physically capable of performing duties which may be assigned to them during emergencies. The employer shall not permit employees with known heart disease, epilepsy, or emphysema, to participate in fire brigade emergency activities unless a physician's certificate of the employees' fitness to participate in such activities is provided. For employees assigned to fire brigades before September 15, 1980, this paragraph is effective on September 15, 1990. For employees assigned to fire brigades on or after September 15, 1980, this paragraph is effective December 15, 1980.

(c) *Training and education.* (1) The employer shall provide training and education for all fire brigade members commensurate with those duties and functions that fire brigade members are expected to perform. Such training and education shall be provided to fire brigade members before they perform fire brigade emergency activities. Fire brigade leaders and training instructors shall be provided with training and education which is more comprehensive than that provided to the general membership of the fire brigade.

(2) The employer shall assure that training and education is conducted frequently enough to assure that each member of the fire brigade is able to perform the member's assigned duties and functions satisfactorily and in a safe manner so as not to endanger fire brigade members or other employees. All fire brigade members shall be provided with training at least annually.

In addition, fire brigade members who are expected to perform interior structural fire fighting shall be provided with an education session or training at least quarterly.

(3) The quality of the training and education program for fire brigade members shall be similar to those conducted by such fire training schools as the Maryland Fire and Rescue Institute; Iowa Fire Service Extension; West Virginia Fire Service Extension; Georgia Fire Academy, New York State Department, Fire Prevention and Control; Louisiana State University Firemen Training Program, or Washington State's Fire Service Training Commission for Vocational Education. (For example, for the oil refinery industry, with its unique hazards, the training and education program for those fire brigade members shall be similar to those conducted by Texas A & M University, Lamar University, Reno Fire School, or the Delaware State Fire School.)

(4) The employer shall inform fire brigade members about special hazards such as storage and use of flammable liquids and gases, toxic chemicals, radioactive sources, and water reactive substances, to which they may be exposed during fire and other emergencies. The fire brigade members shall also be advised of any changes that occur in relation to the special hazards. The employer shall develop and make available for inspection by fire brigade members, written procedures that describe the actions to be taken in situations involving the special hazards and shall include these in the training and education program.

(d) *Fire fighting equipment.* The employer shall maintain and inspect, at least annually, fire fighting equipment to assure the safe operational condition of the equipment. Portable fire extinguishers and respirators shall be inspected at least monthly. Fire fighting equipment that is in damaged or unserviceable condition shall be removed from service and replaced.

(e) *Protective clothing.* The following requirements apply to those employees who perform interior structural fire fighting. The requirements do not apply to employees who use fire extinguishers or standpipe systems to control or extinguish fires only in the incipient stage.

(1) *General.* (i) The employer shall provide at no cost to the employee and assure the use of protective clothing which complies with the requirements of this paragraph. The employer shall assure that protective clothing ordered or purchased after July 1, 1981, meets the requirements contained in this paragraph. As the new equipment is provided, the employer shall assure that all fire brigade members wear the equipment when performing interior structural fire fighting. After July 1, 1985, the employer shall assure that all fire brigade members wear protective clothing meeting the requirements of this paragraph when performing interior structural fire fighting.

(ii) The employer shall assure that protective clothing protects the head, body, and extremities, and consists of at least the following components: foot and leg protection; hand protection; body protection; eye, face and head protection.

(2) *Foot and leg protection.* (i) Foot and leg protection shall meet the requirements of paragraphs (e)(2)(ii) and (e)(2)(iii) of this section, and may be achieved by either of the following methods:

(A) Fully extended boots which provide protection for the legs; or

(B) Protective shoes or boots worn in combination with protective trousers that meet the requirements of paragraph (e)(3) of this section.

(ii) Protective footwear shall meet the requirements of §1910.136 for Class 75 footwear. In addition, protective footwear shall be water-resistant for at least 5 inches (12.7 cm) above the bottom of the heel and shall be equipped with slip-resistant outer soles.

(iii) Protective footwear shall be tested in accordance with paragraph (1) of Appendix E, and shall provide protection against penetration of the midsole by a size 8D common nail when at least 300 pounds (1330 N) of static force is applied to the nail.

(3) *Body protection.* (i) Body protection shall be coordinated with foot and leg protection to ensure full body protection for the wearer. This shall be achieved by one of the following methods:

(A) Wearing of a fire-resistive coat meeting the requirements of paragraph (e)(3)(ii) of this section in combination with fully extended boots meeting the requirements of paragraphs (e)(2)(ii) and (e)(2)(iii) of this section; or

(B) Wearing of a fire-resistive coat in combination with protective trousers both of which meet the requirements of paragraph (e)(3)(ii) of this section.

(ii) The performance, construction, and testing of fire-resistive coats and protective trousers shall be at least equivalent to the requirements of the National Fire Protection Association (NFPA) standard NFPA No. 1971–1975, "Protective Clothing for Structural Fire Fighting," (See Appendix D to Subpart L) with the following permissible variations from those requirements:

(A) Tearing strength of the outer shell shall be a minimum of 8 pounds (35.6 N) in any direction when tested in accordance with paragraph (2) of Appendix E; and

(B) The outer shell may discolor but shall not separate or melt when placed in a forced air laboratory oven at a temperature of 500°F (260°C) for a period of five minutes. After cooling to ambient temperature and using the test method specified in paragraph (3) of Appendix E, char length shall not exceed 4.0 inches (10.2 cm) and after-flame shall not exceed 2.0 seconds.

(4) *Hand protection.* (i) Hand protection shall consist of protective gloves or glove system which will provide protection against cut, puncture, and heat penetration. Gloves or glove system shall be tested in accordance with the test methods contained in the National Institute for Occupational Safety and Health (NIOSH) 1976 publication, "The Development of Criteria for Fire Fighter's Gloves; Vol. II, Part II: Test Methods," (See Appendix D to Subpart L) and shall meet the following criteria for cut, puncture, and heat penetration:

(A) materials used for gloves shall resist surface cut by a blade with an edge having a 60° included angle and a .025 mm (.001 in) radius, under an applied force of 7.2 kg (16 pounds), and at a slicing velocity of greater or equal to 2.5 cm/sec (60 in/min);

(B) materials used for the palm and palm side of the fingers shall resist puncture by a penetrometer (simulating a 4d lath nail), under an applied force of 6 kg (13.2 pounds), and at a velocity greater or equal to .85 cm/sec (20 in/min); and

(C) the temperature inside the palm and gripping surface of the fingers of gloves shall not exceed 57°C (135°F) when gloves or glove system are exposed to 500°C (932°F) for five seconds at 28 kPa (4 psi) pressure.

(ii) Exterior materials of gloves shall be flame resistant and shall be tested in accordance with paragraph (3) of Appendix E. Maximum allowable afterflame shall be 2.0 seconds, and the maximum char length shall be 4.0 inches (10.2 cm).

(iii) When design of the fire-resistive coat does not otherwise provide protection for the wrists, protective gloves shall have wristlets of at least 4.0 inches (10.2 cm) in length to protect the wrist area when the arms are extended upward and outward from the body.

(5) *Head, eye and face protection.* (i) Head protection shall consist of a protective head device with ear flaps and chin strap which meet the performance, construction, and testing

requirements of the National Fire Safety and Research Office of the National Fire Prevention and Control Administration, U.S. Department of Commerce (now known as the U.S. Fire Administration), which are contained in "Model Performance Criteria for Structural Firefighters' Helmets" (August 1977) (See Appendix D to Subpart L).

(ii) Protective eye and face devices which comply with § 1910.133 shall be used by fire brigade members when performing operations where the hazards of flying or falling materials which may cause eye and face injuries are present. Protective eye and face devices provided as accessories to protective head devices (face shields) are permitted when such devices meet the requirements of § 1910.133.

(iii) Full facepieces, helmets, or hoods of breathing apparatus which meet the requirements of § 1910.134 and paragraph (f) of this section, shall be acceptable as meeting the eye and face protection requirements of paragraph (e)(5)(ii) of this section.

(f) *Respiratory protection devices.* (1) *General requirements.* (i) The employer shall provide at no cost to the employee and assure the use of respirators which comply with the requirements of this paragraph. The employer shall assure that respiratory protective devices worn by fire brigade members meet the requirements contained in § 1910.134 and the requirements contained in this paragraph, and are certified under 30 CFR Part 11.

(ii) Approved self-contained breathing apparatus with full-facepiece, or with approved helmet or hood configuration, shall be provided to and worn by fire brigade members while working inside buildings or confined spaces where toxic products of combustion or an oxygen deficiency may be present. Such apparatus shall also be worn during emergency situations involving toxic substances.

(iii) Approved self-contained breathing apparatus may be equipped with either a "buddy-breathing" device or a quick disconnect valve, even if these devices are not certified by NIOSH. If these accessories are used, they shall not cause damage to the apparatus, or restrict the air flow of the apparatus, or obstruct the normal operation of the apparatus.

(iv) Approved self-contained compressed air breathing apparatus may be used with approved cylinders from other approved self-contained compressed air breathing apparatus provided that such cylinders are of the same capacity and pressure rating. All compressed air cylinders used with self-contained breathing apparatus shall meet DOT and NIOSH criteria.

(v) Self-contained breathing apparatus shall have a minimum service life rating of 30 minutes in accordance with the methods and requirements of the Mine Safety and Health Administration (MSHA) and NIOSH, except for escape self-contained breathing apparatus (ESCBA) used only for emergency escape purposes.

(vi) Self-contained breathing apparatus shall be provided with an indicator which automatically sounds an audible alarm when the remaining service life of the apparatus is reduced to within a range of 20 to 25 percent of its rated service time.

(2) *Positive-pressure breathing apparatus.* (i) The employer shall assure that self-contained breathing apparatus ordered or purchased after July 1, 1981, for use by fire brigade members performing interior structural fire fighting operations, are of the pressure-demand or other positive-pressure type. Effective July 1, 1983, only pressure-demand or other positive-pressure self-contained breathing apparatus shall be worn by fire brigade members performing interior structural fire fighting.

(ii) This paragraph does not prohibit the use of a self-contained breathing apparatus where the apparatus can be switched from a demand to a positive-pressure mode. However, such apparatus shall be in the positive-pressure mode when fire brigade members are performing interior structural fire fighting operations.

(iii) Negative-pressure self-contained breathing apparatus with a rated service life of more than 2 hours and which have a minimum protection factor of 5,000, as determined by an acceptable quantitative fit test performed on each individual, is acceptable for use only during those interior structural fire fighting situations for which the employer demonstrates that long duration breathing apparatus is necessary. Quantitative fit test procedures shall be available for inspection by the Assistant Secretary or authorized representative. Such negative-pressure breathing apparatus will continue to be acceptable for 18 months after a positive-pressure breathing apparatus with the same or longer rated service life is certified by NIOSH. After this 18-month period, all self-contained breathing apparatus used for these long duration situations shall be of the positive-pressure type.

11. Section 1910.157 is revised to read as follows:

§ 1910.157 Portable fire extinguishers.

(a) *Scope and application.* The requirements of this section apply to the placement, use, maintenance, and testing of portable fire extinguishers provided for the use of employees. Paragraph (d) of this section does not apply to extinguishers provided for employee use on the outside of workplace buildings or structures. Where extinguishers are provided but are not intended for employee use and the employer has an emergency action plan and a fire prevention plan which meet the requirements of § 1910.38, then only the requirements of paragraphs (e) and (f) of this section apply.

(b) *Exemptions.* (1) Where the employer has established and implemented a written fire safety policy which requires the immediate and total evacuation of employees from the workplace upon the sounding of a fire alarm signal and which includes an emergency action plan and a fire prevention plan which meet the requirements of § 1910.38, and when extinguishers are not available in the workplace, the employer is exempt from all requirements of this section unless a specific standard in Part 1910 requires that a portable fire extinguisher be provided.

(2) Where the employer has an emergency action plan meeting the requirements of § 1910.38 which designates certain employees to be the only employees authorized to use the available portable fire extinguishers, and which requires all other employees in the fire area to immediately evacuate the affected work area upon the sounding of the fire alarm, the employer is exempt from the distribution requirements in paragraph (d) of this section.

(c) *General requirements.* (1) The employer shall provide portable fire extinguishers and shall mount, locate and identify them so that they are readily accessible to employees without subjecting the employees to possible injury.

(2) Only approved portable fire extinguishers shall be used to meet the requirements of this section.

(3) The employer shall not provide or make available in the workplace portable fire extinguishers using carbon tetrachloride or chlorobromomethane extinguishing agents.

(4) The employer shall assure that portable fire extinguishers are maintained in a fully charged and operable condition and kept in their designated places at all times except during use.

(5) The employer shall permanently remove from service by January 1, 1982,

all soldered or riveted shell self-generating soda acid or self-generating foam or gas cartridge water type portable fire extinguishers which are operated by inverting the extinguisher to rupture the cartridge or to initiate an uncontrollable pressure generating chemical reaction to expel the agent.

(d) *Selection and distribution.* (1) Portable fire extinguishers shall be provided for employee use and selected and distributed based on the classes of anticipated workplace fires and on the size and degree of hazard which would affect their use.

(2) The employer shall distribute portable fire extinguishers for use by employees on Class A fires so that the travel distance for employees to any extinguisher is 75 feet (22.9 m) or less.

(3) The employer may use uniformly spaced standpipe systems or hose stations connected to a sprinkler system installed for emergency use by employees instead of Class A portable fire extinguishers, provided that such systems meet the respective requirements of § 1910.158 or § 1910.159, that they provide total coverage of the area to be protected, and that employees are trained at least annually in their use.

(4) The employer shall distribute portable fire extinguishers for use by employees on Class B fires so that the travel distance from the Class B hazard area to any extinguisher is 50 feet (15.2 m) or less.

(5) The employer shall distribute portable fire extinguishers used for Class C hazards on the basis of the appropriate pattern for the existing Class A or Class B hazards.

(6) The employer shall distribute portable fire extinguishers or other containers of Class D extinguishing agent for use by employees so that the travel distance from the combustible metal working area to any extinguishing agent is 75 feet (22.9 m) or less. Portable fire extinguishers for Class D hazards are required in those combustible metal working areas where combustible metal powders, flakes, shavings, or similarly sized products are generated at least once every two weeks.

(e) *Inspection, maintenance and testing.* (1) The employer shall be responsible for the inspection, maintenance and testing of all portable fire extinguishers in the workplace.

(2) Portable extinguishers or hose used in lieu thereof under paragraph (d)(3) of this section shall be visually inspected monthly.

(3) The employer shall assure that portable fire extinguishers are subjected to an annual maintenance check. Stored pressure extinguishers do not require an internal examination. The employer shall record the annual maintenance date and retain this record for one year after the last entry or the life of the shell, whichever is less. The record shall be available to the Assistant Secretary upon request.

(4) The employer shall assure that stored pressure dry chemical extinguishers that require a 12-year hydrostatic test are emptied and subjected to applicable maintenance procedures every 6 years. Dry chemical extinguishers having non-refillable disposable containers are exempt from this requirement. When recharging or hydrostatic testing is performed, the 6-year requirement begins from that date.

(5) The employer shall assure that alternate equivalent protection is provided when portable fire extinguishers are removed from service for maintenance and recharging.

(f) *Hydrostatic testing.* (1) The employer shall assure that hydrostatic testing is performed by trained persons with suitable testing equipment and facilities.

(2) The employer shall assure that portable extinguishers are hydrostatically tested at the intervals listed in Table L-1 of this section, except under any of the following conditions:

(i) when the unit has been repaired by soldering, welding, brazing, or use of patching compounds;

(ii) when the cylinder or shell threads are damaged;

(iii) when there is corrosion that has caused pitting, including corrosion under removable name plate assemblies;

(iv) when the extinguisher has been burned in a fire; or

(v) when a calcium chloride extinguishing agent has been used in a stainless steel shell.

(3) In addition to an external visual examination, the employer shall assure that an internal examination of cylinders and shells to be tested is made prior to the hydrostatic tests.

Table L-1

Type of extinguishers	Test interval (years)
Soda acid (soldered brass shells) (until 1/1/82)	(1)
Soda acid (stainless steel shell)	5
Cartridge operated water and/or antifreeze	5
Stored pressure water and/or antifreeze	5
Wetting agent	5
Foam (soldered brass shells) (until 1/1/82)	(1)
Foam (stainless steel shell)	5
Aqueous Film Forming foam (AFFF)	5
Loaded stream	5
Dry chemical with stainless steel	5
Carbon dioxide	5
Dry chemical, stored pressure, with mild steel, brazed brass or aluminum shells	12
Dry chemical, cartridge or cylinder operated, with mild steel shells	12
Halon 1211	12
Halon 1301	12

Table L-1—Continued

Type of extinguishers	Test interval (years)
Dry powder, cartridge or cylinder operated with mild steel shells	12

[1] Extinguishers having shells constructed of copper or brass joined by soft solder or rivets shall not be hydrostatically tested and shall be removed from service by January 1, 1982. (Not permitted)

(4) The employer shall assure that portable fire extinguishers are hydrostatically tested whenever they show new evidence of corrosion or mechanical injury, except under the conditions listed in paragraph (f)(2)(i)–(v) of this section.

(5) The employer shall assure that hydrostatic tests are performed on extinguisher hose assemblies which are equipped with a shut-off nozzle at the discharge end of the hose. The test interval shall be the same as specified for the extinguisher on which the hose is installed.

(6) The employer shall assure that carbon dioxide hose assemblies with a shut-off nozzle are hydrostatically tested at 1,250 psi (8,620 kPa).

(7) The employer shall assure that dry chemical and dry powder hose assemblies with a shut-off nozzle are hydrostatically tested at 300 psi (2,070 kPa).

(8) Hose assemblies passing a hydrostatic test do not require any type of recording or stamping.

(9) The employer shall assure that hose assemblies for carbon dioxide extinguishers that require a hydrostatic test are tested within a protective cage device.

(10) The employer shall assure that carbon dioxide extinguishers and nitrogen or carbon dioxide cylinders used with wheeled extinguishers are tested every 5 years at 5/3 of the service pressure as stamped into the cylinder. Nitrogen cylinders which comply with 49 CFR 173.34(e)(15) may be hydrostatically tested every 10 years.

(11) The employer shall assure that all stored pressure and Halon 1211 types of extinguishers are hydrostatically tested at the factory test pressure not to exceed two times the service pressure.

(12) The employer shall assure that acceptable self-generating type soda acid and foam extinguishers are tested at 350 psi (2,410 kPa).

(13) Air or gas pressure may not be used for hydrostatic testing.

(14) Extinguisher shells, cylinders, or cartridges which fail a hydrostatic pressure test, or which are not fit for testing shall be removed from service and from the workplace.

(15)(i) The equipment for testing compressed gas type cylinders shall be of the water jacket type. The equipment shall be provided with an expansion indicator which operates with an accuracy within one percent of the total expansion or 0.1cc of liquid.

(ii) The equipment for testing non-compressed gas type cylinders shall consist of the following:

(A) A hydrostatic test pump, hand or power operated, capable of producing not less than 150 percent of the test pressure, which shall include appropriate check valves and fittings;

(B) A flexible connection for attachment to fittings to test through the extinguisher nozzle, test bonnet, or hose outlet, as is applicable; and

(C) A protective cage or barrier for personal protection of the tester, designed to provide visual observation of the extinguisher under test.

(16) The employer shall maintain and provide upon request to the Assistant Secretary evidence that the required hydrostatic testing of fire extinguishers has been performed at the time intervals shown in Table L-1. Such evidence shall include the date of test, the test pressure used, and the person or agency performing the test. Such records shall be kept until the extinguisher is hydrostatically retested at the time interval specified in Table L-1 or until the extinguisher is taken out of service, whichever is less.

(g) *Training and education.* (1) Where the employer has provided portable fire extinguishers for employee use in the workplace, the employer shall also provide an educational program to familiarize employees with the general principles of fire extinguisher use and the hazards involved with incipient stage fire fighting.

(2) The employer shall provide the education required in paragraph (g)(1) of this section upon initial employment and at least annually thereafter.

(3) The employer shall provide employees who have been designated to use fire fighting equipment as part of an emergency action plan with training in the use of the appropriate equipment.

(4) The employer shall provide the training required in paragraph (g)(3) of this section upon initial assignment to the designated group of employees and at least annually thereafter.

12. Section 1910.158 is revised to read as follows:

§ 1910.158 Standpipe and hose systems.

(a) *Scope and application.* (1) *Scope.* This section applies to all small hose, Class II, and Class III standpipe systems installed to meet the requirements of a particular OSHA standard.

(2) *Exception.* This section does not apply to Class I standpipe systems.

(b) *Protection of standpipes.* The employer shall assure that standpipes are located or otherwise protected against mechanical damage. Damaged standpipes shall be repaired promptly.

(c) *Equipment.* (1) *Reels and cabinets.* Where reels or cabinets are provided to contain fire hose, the employer shall assure that they are designed to facilitate prompt use of the hose valves, the hose, and other equipment at the time of a fire or other emergency. The employer shall assure that the reels and cabinets are conspicuously identified and used only for fire equipment.

(2) *Hose outlets and connections.* (i) The employer shall assure that hose outlets and connections are located high enough above the floor to avoid being obstructed and to be accessible to employees.

(ii) The employer shall standardize screw threads or provide appropriate adapters throughout the system and assure that the hose connections are compatible with those used on the supporting fire equipment.

(3) *Hose.* (i) The employer shall assure that every 1½" (3.8 cm) or smaller hose outlet used to meet this standard is equipped with hose connected and ready for use. In extremely cold climates where such installation may result in damaged equipment, the hose may be stored in another location provided it is readily available and can be connected when needed.

(ii) Standpipe systems installed after January 1, 1981, for use by employees, shall be equipped with lined hose. Unlined hose may remain in use on existing systems. However, after the effective date of this standard, unlined hose which becomes unserviceable shall be replaced with lined hose.

(iii) Beginning January 1, 1981, the employer shall provide hose of such length that friction loss resulting from water flowing through the hose will not decrease the pressure at the nozzle below 30 psi (210 kPa). The dynamic pressure at the nozzle shall be within the range of 30 psi (210 kPa) to 125 psi (860 kPa).

(4) *Nozzles.* Beginning July 1, 1981, the employer shall assure that standpipe hose is equipped with shut-off type nozzles.

(d) *Water supply.* The minimum water supply for standpipe and hose systems, which are provided for the use of employees, shall be sufficient to provide 100 gallons per minute (6.3 l/s) for a period of at least thirty minutes.

(e) *Tests and maintenance.* (1) *Acceptance tests.* (i) The employer shall assure that the piping of Class II and Class III systems installed after January 1, 1981, including yard piping, is hydrostatically tested for a period of at least 2 hours at not less than 200 psi (1380 kPa), or at least 50 psi (340 kPa) in excess of normal pressure when such pressure is greater than 150 psi (1030 kPa).

(ii) The employer shall assure that hose on all standpipe systems installed after January 1, 1981, is hydrostatically tested with couplings in place, at a pressure of not less than 200 psi (1380 kPa), before it is placed in service. This pressure shall be maintained for at least 15 seconds and not more than one minute during which time the hose shall not leak nor shall any jacket thread break during the test.

(2) *Maintenance.* (i) The employer shall assure that water supply tanks are kept filled to the proper level except during repairs. When pressure tanks are used, the employer shall assure that proper pressure is maintained at all times except during repairs.

(ii) The employer shall assure that valves in the main piping connections to the automatic sources of water supply are kept fully open at all times except during repair.

(iii) The employer shall assure that hose systems are inspected at least annually and after each use to assure that all of the equipment and hose are in place, available for use, and in serviceable condition.

(iv) When the system or any portion thereof is found not to be serviceable, the employer shall remove it from service immediately and replace it with equivalent protection such as extinguishers and fire watches.

(v) The employer shall assure that hemp or linen hose on existing systems is unracked, physically inspected for deterioration, and reracked using a different fold pattern at least annually. The employer shall assure that defective hose is replaced in accordance with paragraph (c)(3)(ii).

(vi) The employer shall designate trained persons to conduct all inspections required under this section.

13. Section 1910.159 is revised to read as follows:

§ 1910.159 Automatic sprinkler systems.

(a) *Scope and application.* (1) The requirements of this section apply to all automatic sprinkler systems installed to meet a particular OSHA standard.

(2) For automatic sprinkler systems used to meet OSHA requirements and installed prior to the effective date of this standard, compliance with the National Fire Protection Association (NFPA) or the National Board of Fire

Underwriters (NBFU) standard in effect at the time of the system's installation will be acceptable as compliance with this section.

(b) *Exemptions.* Automatic sprinkler systems installed in workplaces, but not required by OSHA, are exempt from the requirements of this section.

(c) *General requirements.* (1) *Design.* (i) All automatic sprinkler designs used to comply with this standard shall provide the necessary discharge patterns, densities, and water flow characteristics for complete coverage in a particular workplace or zoned subdivision of the workplace.

(ii) The employer shall assure that only approved equipment and devices are used in the design and installation of automatic sprinkler systems used to comply with this standard.

(2) *Maintenance.* The employer shall properly maintain an automatic sprinkler system installed to comply with this section. The employer shall assure that a main drain flow test is performed on each system annually. The inspector's test valve shall be opened at least every two years to assure that the sprinkler system operates properly.

(3) *Acceptance tests.* The employer shall conduct proper acceptance tests on sprinkler systems installed for employee protection after January 1, 1981, and record the dates of such tests. Proper acceptance tests include the following:

(i) flushing of underground connections;

(ii) hydrostatic tests of piping in system;

(iii) air tests in dry-pipe systems;

(iv) dry-pipe valve operation; and

(v) test of drainage facilities.

(4) *Water supplies.* The employer shall assure that every automatic sprinkler system is provided with at least one automatic water supply capable of providing design water flow for at least 30 minutes. An auxiliary water supply or equivalent protection shall be provided when the automatic water supply is out of service, except for systems of 20 or fewer sprinklers.

(5) *Hose connections for fire fighting use.* The employer may attach hose connections for fire fighting use to wet pipe sprinkler systems provided that the water supply satisfies the combined design demand for sprinklers and standpipes.

(6) *Protection of piping.* The employer shall assure that automatic sprinkler system piping is protected against freezing and exterior surface corrosion.

(7) *Drainage.* The employer shall assure that all dry sprinkler pipes and fittings are installed so that the system may be totally drained.

(8) *Sprinklers.* (i) The employer shall assure that only approved sprinklers are used on systems.

(ii) The employer may not use older style sprinklers to replace standard sprinklers without a complete engineering review of the altered part of the system.

(iii) The employer shall assure that sprinklers are protected from mechanical damage.

(9) *Sprinkler alarms.* On all sprinkler systems having more than twenty (20) sprinklers, the employer shall assure that a local waterflow alarm is provided which sounds an audible signal on the premises upon water flow through the system equal to the flow from a single sprinkler.

(10) *Sprinkler spacing.* The employer shall assure that sprinklers are spaced to provide a maximum protection area per sprinkler, a minimum of interference to the discharge pattern by building or structural members or building contents and suitable sensitivity to possible fire hazards. The minimum vertical clearance between sprinklers and material below shall be 18 inches.

(11) *Hydraulically designed systems.* The employer shall assure that hydraulically designed automatic sprinkler systems or portions thereof are identified and that the location, number of sprinklers in the hydraulically designed section, and the basis of the design is indicated. Central records may be used in lieu of signs at sprinkler valves provided the records are available for inspection and copying by the Assistant Secretary.

14. Section 1910.160 is revised to read as follows:

§ 1910.160 Fixed extinguishing systems, general.

(a) *Scope and application.* (1) This section applies to all fixed extinguishing systems installed to meet a particular OSHA standard except for automatic sprinkler systems which are covered by § 1910.159.

(2) This section also applies to fixed systems not installed to meet a particular OSHA standard, but which, by means of their operation, may expose employees to possible injury, death, or adverse health consequences caused by the extinguishing agent. Such systems are only subject to the requirements of paragraphs (b)(4) through (b)(7) and (c) of this section.

(3) Systems otherwise covered in paragraph (a)(2) of this section which are installed in areas with no employee exposure are exempted from the requirements of this section.

(b) *General requirements.* (1) Fixed extinguishing system components and agents shall be designed and approved for use on the specific fire hazards they are expected to control or extinguish.

(2) If for any reason a fixed extinguishing system becomes inoperable, the employer shall notify employees and take the necessary temporary precautions to assure their safety until the system is restored to operating order. Any defects or impairments shall be properly corrected by trained personnel.

(3) The employer shall provide a distinctive alarm or signaling system which complies with § 1910.165 and is capable of being perceived above ambient noise or light levels, on all extinguishing systems in those portions of the workplace covered by the extinguishing system to indicate when the extinguishing system is discharging. Discharge alarms are not required on systems where discharge is immediately recognizable.

(4) The employer shall provide effective safeguards to warn employees against entry into discharge areas where the atmosphere remains hazardous to employee safety or health.

(5) The employer shall post hazard warning or caution signs at the entrance to, and inside of, areas protected by fixed extinguishing systems which use agents in concentrations known to be hazardous to employee safety and health.

(6) The employer shall assure that fixed systems are inspected annually by a person knowledgeable in the design and function of the system to assure that the system is maintained in good operating condition.

(7) The employer shall assure that the weight and pressure of refillable containers is checked at least semi-annually. If the container shows a loss in net content or weight of more than 5 percent, or a loss in pressure of more than 10 percent, it shall be subjected to maintenance.

(8) The employer shall assure that factory charged nonrefillable containers which have no means of pressure indication are weighed at least semi-annually. If a container shows a loss in net weight or more than 5 percent it shall be replaced.

(9) The employer shall assure that inspection and maintenance dates are recorded on the container, on a tag attached to the container, or in a central location. A record of the last semi-annual check shall be maintained until the container is checked again or for the life of the container, whichever is less.

(10) The employer shall train employees designated to inspect, maintain, operate, or repair fixed extinguishing systems and annually

review their training to keep them up-to-date in the functions they are to perform.

(11) The employer shall not use chlorobromomethane or carbon tetrachloride as an extinguishing agent where employees may be exposed.

(12) The employer shall assure that systems installed in the presence of corrosive atmospheres are constructed of non-corrosive material or otherwise protected against corrosion.

(13) Automatic detection equipment shall be approved, installed and maintained in accordance with § 1910.164.

(14) The employer shall assure that all systems designed for and installed in areas with climatic extremes shall operate effectively at the expected extreme temperatures.

(15) The employer shall assure that at least one manual station is provided for discharge activation of each fixed extinguishing system.

(16) The employer shall assure that manual operating devices are identified as to the hazard against which they will provide protection.

(17) The employer shall provide and assure the use of the personal protective equipment needed for immediate rescue of employees trapped in hazardous atmospheres created by an agent discharge.

(c) *Total flooding systems with potential health and safety hazards to employees.* (1) The employer shall provide an emergency action plan in accordance with § 1910.38 for each area within a workplace that is protected by a total flooding system which provides agent concentrations exceeding the maximum safe levels set forth in paragraphs (b)(5) and (b)(6) of § 1910.162.

(2) Systems installed in areas where employees cannot enter during or after the system's operation are exempt from the requirements of paragraph (c) of this section.

(3) On all total flooding systems the employer shall provide a pre-discharge employee alarm which complies with § 1910.165, and is capable of being perceived above ambient light or noise levels before the system discharges, which will give employees time to safely exit from the discharge area prior to system discharge.

(4) The employer shall provide automatic actuation of total flooding systems by means of an approved fire detection device installed and interconnected with a pre-discharge employee alarm system to give employees time to safely exit from the discharge area prior to system discharge.

15. Section 1910.161 is revised to read as follows:

§ 1910.161 Fixed extinguishing systems, dry chemical.

(a) *Scope and application.* This section applies to all fixed extinguishing systems, using dry chemical as the extinguishing agent, installed to meet a particular OSHA standard. These systems shall also comply with § 1910.160.

(b) *Specific requirements.* (1) The employer shall assure that dry chemical agents are compatible with any foams or wetting agents with which they are used.

(2) The employer may not mix together dry chemical extinguishing agents of different compositions. The employer shall assure that dry chemical systems are refilled with the chemical stated on the approval nameplate or an equivalent compatible material.

(3) When dry chemical discharge may obscure vision, the employer shall provide a pre-discharge employee alarm which complies with § 1910.165 and which will give employees time to safely exit from the discharge area prior to system discharge.

(4) The employer shall sample the dry chemical supply of all but stored pressure systems at least annually to assure that the dry chemical supply is free of moisture which may cause the supply to cake or form lumps.

(5) The employer shall assure that the rate of application of dry chemicals is such that the designed concentration of the system will be reached within 30 seconds of initial discharge.

16. The heading for the existing § 1910.162 is deleted and a new § 1910.162 is added to read as follows:

§ 1910.162 Fixed extinguishing systems, gaseous agent.

(a) *Scope and application.* (1) *Scope.* This section applies to all fixed extinguishing systems, using a gas as the extinguishing agent, installed to meet a particular OSHA standard. These systems shall also comply with § 1910.160. In some cases, the gas may be in a liquid state during storage.

(2) *Application.* The requirements of paragraphs (b)(2) and (b)(4) through (b)(7) shall apply only to total flooding systems.

(b) *Specific requirements.* (1) Agents used for initial supply and replenishment shall be of the type approved for the system's application. Carbon dioxide obtained by dry ice conversion to liquid is not acceptable unless it is processed to remove excess water and oil.

(2) Except during overhaul, the employer shall assure that the designed concentration of gaseous agents is maintained until the fire has been extinguished or is under control.

(3) The employer shall assure that employees are not exposed to toxic levels of gaseous agent or its decomposition products.

(4) The employer shall assure that the designed extinguishing concentration is reached within 30 seconds of initial discharge except for Halon systems which must achieve design concentration within 10 seconds.

(5) The employer shall provide a distinctive pre-discharge employee alarm capable of being perceived above ambient light or noise levels when agent design concentrations exceed the maximum safe level for employee exposure. A pre-discharge employee alarm for alerting employees before system discharge shall be provided on Halon 1211 and carbon dioxide systems with a design concentration of 4 percent or greater and for Halon 1301 systems with a design concentration of 10 percent or greater. The pre-discharge employee alarm shall provide employees time to safely exit the discharge area prior to system discharge.

(6)(i) Where egress from an area cannot be accomplished within one minute, the employer shall not use Halon 1301 in concentrations greater than 7 percent.

(ii) Where egress takes greater than 30 seconds but less than one minute, the employer shall not use Halon 1301 in a concentration greater than 10 percent.

(iii) Halon 1301 concentrations greater than 10 percent are only permitted in areas not normally occupied by employees provided that any employee in the area can escape within 30 seconds. The employer shall assure that no unprotected employees enter the area during agent discharge.

17. Section 1910.163 is revised to read as follows:

§ 1910.163 Fixed extinguishing systems, water spray and foam.

(a) *Scope and application.* This section applies to all fixed extinguishing systems, using water or foam solution as the extinguishing agent, installed to meet a particular OSHA standard. These systems shall also comply with § 1910.160. This section does not apply to automatic sprinkler systems which are covered under § 1910.159.

(b) *Specific requirements.* (1) The employer shall assure that foam and water spray systems are designed to be effective in at least controlling fire in the

protected area or on protected equipment.

(2) The employer shall assure that drainage of water spray systems is directed away from areas where employees are working and that no emergency egress is permitted through the drainage path.

18. The existing § 1910.164 has been renumbered to § 1910.156 and revised as noted in item No. 10. A new § 1910.164 is added to read as follows:

§ 1910.164 Fire detection systems.

(a) *Scope and application.* This section applies to all automatic fire detection systems installed to meet the requirements of a particular OSHA standard.

(b) *Installation and restoration.* (1) The employer shall assure that all devices and equipment constructed and installed to comply with this standard are approved for the purpose for which they are intended.

(2) The employer shall restore all fire detection systems and components to normal operating condition as promptly as possible after each test or alarm. Spare detection devices and components which are normally destroyed in the process of detecting fires shall be available on the premises or from a local supplier in sufficient quantities and locations for prompt restoration of the system.

(c) *Maintenance and testing.* (1) The employer shall maintain all systems in an operable condition except during repairs or maintenance.

(2) The employer shall assure that fire detectors and fire detection systems are tested and adjusted as often as needed to maintain proper reliability and operating condition except that factory calibrated detectors need not be adjusted after installation.

(3) The employer shall assure that pneumatic and hydraulic operated detection systems installed after January 1, 1981, are equipped with supervised systems.

(4) The employer shall assure that the servicing, maintenance and testing of fire detection systems, including cleaning and necessary sensitivity adjustments are performed by a trained person knowledgeable in the operations and functions of the system.

(5) The employer shall also assure that fire detectors that need to be cleaned of dirt, dust, or other particulates in order to be fully operational are cleaned at regular periodic intervals.

(d) *Protection of fire detectors.* (1) The employer shall assure that fire detection equipment installed outdoors or in the presence of corrosive atmospheres be protected from corrosion. The employer shall provide a canopy, hood, or other suitable protection for detection equipment requiring protection from the weather.

(2) The employer shall locate or otherwise protect detection equipment so that it is protected from mechanical or physical impact which might render it inoperable.

(3) The employer shall assure that detectors are supported independently of their attachment to wires or tubing.

(e) *Response time.* (1) The employer shall assure that fire detection systems installed for the purpose of actuating fire extinguishment or suppression systems shall be designed to operate in time to control or extinguish a fire.

(2) The employer shall assure that fire detection systems installed for the purpose of employee alarm and evacuation be designed and installed to provide a warning for emergency action and safe escape of employees.

(3) The employer shall not delay alarms or devices initiated by fire detector actuation for more than 30 seconds unless such delay is necessary for the immediate safety of employees. When such delay is necessary, it shall be addressed in an emergency action plan meeting the requirements of § 1910.38.

(f) *Number, location and spacing of detecting devices.* The employer shall assure that the number, spacing and location of fire detectors is based upon design data obtained from field experience, or tests, engineering surveys, the manufacturer's recommendations, or a recognized testing laboratory listing.

19. Section 1910.165 is revised to read as follows:

§ 1910.165 Employee alarm systems.

(a) *Scope and application.* (1) This section applies to all emergency employee alarms installed to meet a particular OSHA standard. This section does not apply to those discharge or supervisory alarms required on various fixed extinguishing systems or to supervisory alarms on fire suppression, alarm or detection systems unless they are intended to be employee alarm systems.

(2) The requirements in this section that pertain to maintenance, testing and inspection shall apply to all local fire alarm signaling systems used for alerting employees regardless of the other functions of the system.

(3) All pre-discharge employee alarms installed to meet a particular OSHA standard shall meet the requirements of paragraphs (b)(1) through (b)(4), (c), and (d)(1) of this section.

(b) *General requirements.* (1) The employee alarm system shall provide warning for necessary emergency action as called for in the emergency action plan, or for reaction time for safe escape of employees from the workplace or the immediate work area, or both.

(2) The employee alarm shall be capable of being perceived above ambient noise or light levels by all employees in the affected portions of the workplace. Tactile devices may be used to alert those employees who would not otherwise be able to recognize the audibile or visual alarm.

(3) The employee alarm shall be distinctive and recognizable as a signal to evacuate the work area or to perform actions designated under the emergency action plan.

(4) The employer shall explain to each employee the preferred means of reporting emergencies, such as manual pull box alarms, public address systems, radio or telephones. The employer shall post emergency telephone numbers near telephones, or employee notice boards, and other conspicuous locations when telephones serve as a means of reporting emergencies. Where a communication system also serves as the employee alarm system, all emergency messages shall have priority over all non-emergency messages.

(5) The employer shall establish procedures for sounding emergency alarms in the workplace. For those employers with 10 or fewer employees in a particular workplace, direct voice communication is an acceptable procedure for sounding the alarm provided all employees can hear the alarm. Such workplaces need not have a back-up system.

(c) *Installation and restoration.* (1) The employer shall assure that all devices, components, combinations of devices or systems constructed and installed to comply with this standard are approved. Steam whistles, air horns, strobe lights or similar lighting devices, or tactile devices meeting the requirements of this section are considered to meet this requirement for approval.

(2) The employer shall assure that all employee alarm systems are restored to normal operating condition as promptly as possible after each test or alarm. Spare alarm devices and components subject to wear or destruction shall be available in sufficient quantities and locations for prompt restoration of the system.

(d) *Maintenance and testing.* (1) The employer shall assure that all employee alarm systems are maintained in

operating condition except when undergoing repairs or maintenance.

(2) The employer shall assure that a test of the reliability and adequacy of non-supervised employee alarm systems is made every two months. A different actuation device shall be used in each test of a multi-actuation device system so that no individual device is used for two consecutive tests.

(3) The employer shall maintain or replace power supplies as often as is necessary to assure a fully operational condition. Back-up means of alarm, such as employee runners or telephones, shall be provided when systems are out of service.

(4) The employer shall assure that employee alarm circuitry installed after January 1, 1981, which is capable of being supervised is supervised and that it will provide positive notification to assigned personnel whenever a deficiency exists in the system. The employer shall assure that all supervised employee alarm systems are tested at least annually for reliability and adequacy.

(5) The employer shall assure that the servicing, maintenance and testing of employee alarms are done by persons trained in the designed operation and functions necessary for reliable and safe operation of the system.

(e) *Manual operation.* The employer shall assure that manually operated actuation devices for use in conjunction with employee alarms are unobstructed, conspicuous and readily accessible.

§ 1910.165a [Revoked]

§ 1910.165b [Revoked]

20. The existing §§ 1910.165a and 1910.165b are revoked.

21. 29 CFR Part 1910 is revised by adding the following appendices after the appropriate subparts.

Appendix to Subpart E

Means of Egress

This appendix serves as a nonmandatory guideline to assist employers in complying with the appropriate requirements of Subpart E.

§ 1910.38 Employee emergency plans.

1. *Emergency action plan elements.* The emergency action plan should address emergencies that the employer may reasonably expect in the workplace. Examples are: fire; toxic chemical releases; hurricanes; tornadoes; blizzards; floods; and others. The elements of the emergency action plan presented in paragraph 1910.38(a)(2) can be supplemented by the following to more effectively achieve employee safety and health in an emergency. The employer should list in detail the procedures to be taken by those employees who have been selected to remain behind to care for essential plant operations until their evacuation becomes absolutely necessary. Essential plant operations may include the monitoring of plant power supplies, water supplies, and other essential services which cannot be shut down for every emergency alarm. Essential plant operations may also include chemical or manufacturing processes which must be shut down in stages or steps where certain employees must be present to assure that safe shut down procedures are completed.

The use of floor plans or workplace maps which clearly show the emergency escape routes should be included in the emergency action plan. Color coding will aid employees in determining their route assignments.

The employer should also develop and explain in detail what rescue and medical first aid duties are to be performed and by whom. All employees are to be told what actions they are to take in these emergency situations that the employer anticipates may occur in the workplace.

2. *Emergency evacuation.* At the time of an emergency, employees should know what type of evacuation is necessary and what their role is in carrying out the plan. In some cases where the emergency is very grave, total and immediate evacuation of all employees is necessary. In other emergencies, a partial evacuation of nonessential employees with a delayed evacuation of others may be necessary for continued plant operation. In some cases, only those employees in the immediate area of the fire may be expected to evacuate or move to a safe area such as when a local application fire suppression system discharge employee alarm is sounded. Employees must be sure that they know what is expected of them in all such emergency possibilities which have been planned in order to provide assurance of their safety from fire or other emergency.

The designation of refuge or safe areas for evacuation should be determined and identified in the plan. In a building divided into fire zones by fire walls, the refuge area may still be within the same building but in a different zone from where the emergency occurs.

Exterior refuge or safe areas may include parking lots, open fields or streets which are located away from the site of the emergency and which provide sufficient space to accommodate the employees. Employees should be instructed to move away from the exit discharge doors of the building, and to avoid congregating close to the building where they may hamper emergency operations.

3. *Emergency action plan training.* The employer should assure that an adequate number of employees are available at all times during working hours to act as evacuation wardens so that employees can be swiftly moved from the danger location to the safe areas. Generally, one warden for each twenty employees in the workplace should be able to provide adequate guidance and instruction at the time of a fire emergency. The employees selected or who volunteer to serve as wardens should be trained in the complete workplace layout and the various alternative escape routes from the workplace. All wardens and fellow employees should be made aware of handicapped employees who may need extra assistance, such as using the buddy system, and of hazardous areas to be avoided during emergencies. Before leaving, wardens should check rooms and other enclosed spaces in the workplace for employees who may be trapped or otherwise unable to evacuate the area.

After the desired degree of evacuation is completed, the wardens should be able to account for or otherwise verify that all employees are in the safe areas.

In buildings with several places of employment, employers are encouraged to coordinate their plans with the other employers in the building. A building-wide or standardized plan for the whole building is acceptable provided that the employers inform their respective employees of their duties and responsibilities under the plan. The standardized plan need not be kept by each employer in the multi-employer building, provided there is an accessible location within the building where the plan can be reviewed by affected employees. When multi-employer building-wide plans are not feasible, employers should coordinate their plans with the other employers within the building to assure that conflicts and confusion are avoided during times of emergencies. In multi-story buildings where more than one employer is on a single floor, it is essential that these employers coordinate their plans with each other to avoid conflicts and confusion.

4. *Fire prevention housekeeping.* The standard calls for the control of accumulations of flammable and combustible waste materials.

It is the intent of this standard to assure that hazardous accumulations of combustible waste materials are controlled so that a fast developing fire, rapid spread of toxic smoke, or an explosion will not occur. This does not necessarily mean that each room has to be swept each day. Employers and employees should be aware of the hazardous properties of materials in their workplaces, and the degree of hazard each poses. Certainly oil soaked rags have to be treated differently than general paper trash in office areas. However, large accumulations of waste paper or corrugated boxes, etc., can pose a significant fire hazard. Accumulations of materials which can cause large fires or generate dense smoke that are easily ignited or may start from spontaneous combustion, are the types of materials with which this standard is concerned. Such combustible materials may be easily ignited by matches, welder's sparks, cigarettes and similar low level energy ignition sources.

5. *Maintenance of equipment under the fire prevention plan.* Certain equipment is often installed in workplaces to control heat sources or to detect fuel leaks. An example is a temperature limit switch often found on deep-fat food fryers found in restaurants. There may be similar switches for high temperature dip tanks, or flame failure and flashback arrester devices on furnaces and similar heat producing equipment. If these devices are not properly maintained or if they become inoperative, a definite fire hazard exists. Again employees and supervisors

should be aware of the specific type of control devices on equipment involved with combustible materials in the workplace and should make sure, through periodic inspection or testing, that these controls are operable. Manufacturers' recommendations should be followed to assure proper maintenance procedures.

The following appendices to Subpart L, except Appendix E, serve as nonmandatory guidelines to assist employers in complying with the appropriate requirements of Subpart L.

Appendix A to Subpart L

Fire Protection

§ *1910.156 Fire brigades.*

1. *Scope.* This section does not require an employer to organize a fire brigade. However, if an employer does decide to organize a fire brigade, the requirements of this section apply.

2. *Pre-fire planning.* It is suggested that pre-fire planning be conducted by the local fire department and/or the workplace fire brigade in order for them to be familiar with the workplace and process hazards. Involvement with the local fire department or fire prevention bureau is encouraged to facilitate coordination and cooperation between members of the fire brigade and those who might be called upon for assistance during a fire emergency.

3. *Organizational statement.* In addition to the information required in the organizational statement, paragraph 1910.156(b)(1), it is suggested that the organizational statement also contain the following information: a description of the duties that the fire brigade members are expected to perform; the line authority of each fire brigade officer; the number of the fire brigade officers and number of training instructors; and a list and description of the types of awards or recognition that brigade members may be eligible to receive.

4. *Physical capability.* The physical capability requirement applies only to those fire brigade members who perform interior structural fire fighting. Employees who cannot meet the physical capability requirement may still be members of the fire brigade as long as such employees do not perform interior structural fire fighting. It is suggested that fire brigade members who are unable to perform interior structural fire fighting be assigned less stressful and physically demanding fire brigade duties, e.g., certain types of training, recordkeeping, fire prevention inspection and maintenance, and fire pump operations.

Physically capable can be defined as being able to perform those duties specified in the training requirements of section 1910.156(c). Physically capable can also be determined by physical performance tests or by a physical examination when the examining physician is aware of the duties that the fire brigade member is expected to perform.

It is also recommended that fire brigade members participate in a physical fitness program. There are many benefits which can be attributed to being physically fit. It is believed that physical fitness may help to reduce the number of sprain and strain injuries as well as contributing to the improvement of the cardiovascular system.

5. *Training and education.* The paragraph on training and education does not contain specific training and education requirements because the type, amount, and frequency of training and education will be as varied as are the purposes for which fire brigades are organized. However, the paragraph does require that training and education be commensurate with those functions that the fire brigade is expected to perform; i.e., those functions specified in the organizational statement. Such a performance requirement provides the necessary flexibility to design a training program which meets the needs of individual fire brigades.

At a minimum, hands-on training is required to be conducted annually for all fire brigade members. However, for those fire brigade members who are expected to perform interior structural fire fighting, some type of training or education session must be provided at least quarterly.

In addition to the required hands-on training, it is strongly recommended that fire brigade members receive other types of training and education such as: classroom instruction, review of emergency action procedures, pre-fire planning, review of special hazards in the workplace, and practice in the use of self-contained breathing apparatus.

It is not necessary for the employer to duplicate the same training or education that a fire brigade member receives as a member of a community volunteer fire department, rescue squad, or similar organization. However, such training or education must have been provided to the fire brigade member within the past year and it must be documented that the fire brigade member has received the training or education. For example: there is no need for a fire brigade member to receive another training class in the use of positive-pressure self-contained breathing apparatus if the fire brigade member has recently completed such training as a member of a community fire department. Instead, the fire brigade member should receive training or education covering other important equipment or duties of the fire brigade as they relate to the workplace hazards, facilities and processes.

It is generally recognized that the effectiveness of fire brigade training and education depends upon the expertise of those providing the training and education as well as the motivation of the fire brigade members. Fire brigade training instructors must receive a higher level of training and education than the fire brigade members they will be teaching. This includes being more knowledgeable about the functions to be performed by the fire brigade and the hazards involved. The instructors should be qualified to train fire brigade members and demonstrate skills in communication, methods of teaching, and motivation. It is important for instructors and fire brigade members alike to be motivated toward the goals of the fire brigade and be aware of the importance of the service that they are providing for the protection of other employees and the workplace.

It is suggested that publications from the International Fire Service Training Association, the National Fire Protection Association (NFPA-1041), the International Society of Fire Service Instructors and other fire training sources be consulted for recommended qualifications of fire brigade training instructors.

In order to be effective, fire brigades must have competent leadership and supervision. It is important for those who supervise the fire brigade during emergency situations, e.g., fire brigade chiefs, leaders, etc., to receive the necessary training and education for supervising fire brigade activities during these hazardous and stressful situations. These fire brigade members with leadership responsibilities should demonstrate skills in strategy and tactics, fire suppression and prevention techniques, leadership principles, pre-fire planning, and safety practices. It is again suggested that fire service training sources be consulted for determining the kinds of training and education which are necessary for those with fire brigade leadership responsibilities.

It is further suggested that fire brigade leaders and fire brigade instructors receive more formalized training and education on a continuing basis by attending classes provided by such training sources as universities and university fire extension services.

The following recommendations should not be considered to be all of the necessary elements of a complete comprehensive training program, but the information may be helpful as a guide in developing a fire brigade training program.

All fire brigade members should be familiar with exit facilities and their location, emergency escape routes for handicapped workers, and the workplace "emergency action plan."

In addition, fire brigade members who are expected to control and extinguish fires in the incipient stage should, at a minimum, be trained in the use of fire extinguishers, standpipes, and other fire equipment they are assigned to use. They should also be aware of first aid medical procedures and procedures for dealing with special hazards to which they may be exposed. Training and education should include both classroom instruction and actual operation of the equipment under simulated emergency conditions. Hands-on type training must be conducted at least annually but some functions should be reviewed more often.

In addition to the above training, fire brigade members who are expected to perform emergency rescue and interior structural fire fighting should, at a minimum, be familiar with the proper techniques in rescue and fire suppression procedures. Training and education should include fire protection courses, classroom training, simulated fire situations including "wet drills" and, when feasible, extinguishment of actual mock fires. Frequency of training or education must be at least quarterly, but some drills or classroom training should be conducted as often as monthly or even weekly to maintain the proficiency of fire brigade members.

There are many excellent sources of training and education that the employer may want to use in developing a training program

for the workplace fire brigade. These sources include publications, seminars, and courses offered by universities.

There are also excellent fire school courses by such facilities as Texas A and M University, Delaware State Fire School, Lamar University, and Reno Fire School, that deal with those unique hazards which may be encountered by fire brigades in the oil and chemical industry. These schools, and others, also offer excellent training courses which would be beneficial to fire brigades in other types of industries. These courses should be a continuing part of the training program, and employers are strongly encouraged to take advantage of these excellent resources.

It is also important that fire brigade members be informed about special hazards to which they may be exposed during fire and other emergencies. Such hazards as storage and use areas of flammable liquids and gases, toxic chemicals, water-reactive substances, etc., can pose difficult problems. There must be written procedures developed that describe the actions to be taken in situations involving special hazards. Fire brigade members must be trained in handling these special hazards as well as keeping abreast of any changes that occur in relation to these special hazards.

6. *Fire fighting equipment.* It is important that fire fighting equipment that is in damaged or unserviceable condition be removed from service and replaced. This will prevent fire brigade members from using unsafe equipment by mistake.

Fire fighting equipment, except portable fire extinguishers and respirators, must be inspected at least annually. Portable fire extinguishers and respirators are required to be inspected at least monthly.

7. *Protective clothing.* (A) *General.* Paragraph (e) of § 1910.156 does not require all fire brigade members to wear protective clothing. It is not the intention of these standards to require employers to provide a full ensemble of protective clothing for every fire brigade member without consideration given to the types of hazardous environments to which the fire brigade member might be exposed. It is the intention of these standards to require adequate protection for those fire brigade members who might be exposed to fires in an advanced stage, smoke, toxic gases, and high temperatures. Therefore, the protective clothing requirements only apply to those fire brigade members who perform interior structural fire fighting operations.

Additionally, the protective clothing requirements do not apply to the protective clothing worn during outside fire fighting operations (brush and forest fires, crash crew operations) or other special fire fighting activities. It is important that the protective clothing to be worn during these types of fire fighting operations reflect the hazards which are expected to be encountered by fire brigade members.

(B) *Foot and leg protection.* Section 1910.156 permits an option to achieve foot and leg protection.

The section recognizes the interdependence of protective clothing to cover one or more parts of the body. Therefore, an option is given so that fire brigade members may meet the foot and leg requirements by either wearing long fire-resistive coats in combination with fully extended boots, or by wearing shorter fire-resistive costs in combination with protective trousers and protective shoes or shorter boots.

(C) *Body protection.* Paragraph (e)(3) of § 1910.156 provides an option for fire brigade members to achieve body protection. Fire brigade members may wear a fire-resistive coat in combination with fully extended boots, or they may wear a fire-resistive coat in combination with protective trousers.

Fire-resistive coats and protective trousers meeting all of the requirements contained in NFPA 1971–1975 "Protective Clothing for Structural Fire Fighters," are acceptable as meeting the requirements of this standard.

The lining is required to be permanently attached to the outer shell. However, it is permissible to attach the lining to the outer shell material by stitching in one area such as at the neck. Fastener tape or snap fasteners may be used to secure the rest of the lining to the outer shell to facilitate cleaning. Reference to permanent lining does not refer to a winter liner which is a detachable extra lining used to give added protection to the wearer against the effects of cold weather and wind.

(D) *Hand protection.* The requirements of the paragraph on hand protection may be met by protective gloves or a glove system. A glove system consists of a combination of different gloves. The usual components of a glove system consist of a pair of gloves, which provide thermal insulation to the hands, worn in combination with a second pair of gloves which provide protection against flame, cut, and puncture.

It is suggested that protective gloves provide dexterity and a sense of feel for objects. Criteria and test methods for dexterity are contained in the NIOSH publications, "The Development of Criteria for Firefighters' Gloves; Vol. I: Glove Requirements" and "Vol. II: Glove Criteria and Test Methods." These NIOSH publications also contain a permissible modified version of Federal Test Method 191, Method 5903, (paragraph (3) of Appendix E) for flame resistance when gloves, rather than glove material, are tested for flame resistance.

(E) *Head, eye, and face protection.* Head protective devices which meet the requirements contained in NFPA No. 1972 are acceptable as meeting the requirements of this standard for head protection.

Head protective devices are required to be provided with ear flaps so that the ear flaps will be available if needed. It is recommended that ear protection always be used while fighting interior structural fires.

Many head protective devices are equipped with face shields to protect the eyes and face. These face shields are permissible as meeting the eye and face protection requirements of this paragraph as long as such face shields meet the requirements of § 1910.133 of the General Industry Standards.

Additionally, full facepieces, helmets or hoods of approved breathing apparatus which meet the requirements of § 1910.134 and paragraph (f) of § 1910.156 are also acceptable as meeting the eye and face protection requirements.

It is recommended that a flame resistant protective head covering such as a hood or snood, which will not adversely affect the seal of a respirator facepiece, be worn during interior structural fire fighting operations to protect the sides of the face and hair.

8. *Respiratory protective devices.* Respiratory protection is required to be worn by fire brigade members while working inside buildings or confined spaces where toxic products of combustion or an oxygen deficiency is likely to be present; respirators are also to be worn during emergency situations involving toxic substances. When fire brigade members respond to emergency situations, they may be exposed to unknown contaminants in unknown concentrations. Therefore, it is imperative that fire brigade members wear proper respiratory protective devices during these situations. Additionally, there are many instances where toxic products of combustion are still present during mop-up and overhaul operations. Therefore, fire brigade members should continue to wear respirators during these types of operations.

Self-contained breathing apparatus are not required to be equipped with either a buddy-breathing device or a quick-disconnect valve. However, these accessories may be very useful and are acceptable as long as such accessories do not cause damage to the apparatus, restrict the air flow of the apparatus, or obstruct the normal operation of the apparatus.

Buddy-breathing devices are useful for emergency situations where a victim or another fire brigade member can share the same air supply with the wearer of the apparatus for emergency escape purposes.

The employer is encouraged to provide fire brigade members with an alternative means of respiratory protection to be used only for emergency escape purposes if the self-contained breathing apparatus becomes inoperative. Such alternative means of respiratory protection may be either a buddy-breathing device or an escape self-contained breathing apparatus (ESCBA). The ESCBA is a short-duration respiratory protective device which is approved for only emergency escape purposes. It is suggested that if ESCBA units are used, that they be of at least 5 minutes service life.

Quick-disconnect valves are devices which start the flow of air by insertion of the hose (which leads to the facepiece) into the regulator of self-contained breathing apparatus, and stop the flow of air by disconnecting the hose from the regulator. These devices are particularly useful for those positive-pressure self-contained breathing apparatus which do not have the capability of being switched from the demand to the positive-pressure mode.

The use of a self-contained breathing apparatus where the apparatus can be switched from a demand to a positive-pressure mode is acceptable as long as the apparatus is in the positive-pressure mode when performing interior structural fire fighting operations. Also acceptable are approved respiratory protective devices which have been converted to the positive-pressure type when such modification is accomplished by trained and experienced

persons using kits or parts approved by NIOSH and provided by the manufacturer and by following the manufacturer's instructions.

There are situations which require the use of respirators which have a duration of 2 hours or more. Presently, there are no approved positive-pressure apparatus with a rated service life of more than 2 hours. Consequently, negative-pressure self-contained breathing apparatus with a rated service life of more than 2 hours and which have a minimum protection factor of 5,000 as determined by an acceptable quantitative fit test performed on each individual, will be acceptable for use during situations which require long duration apparatus. Long duration apparatus may be needed in such instances as working in tunnels, subway systems, etc. Such negative-pressure breathing apparatus will continue to be acceptable for a maximum of 18 months after a positive-pressure apparatus with the same or longer rated service life of more than 2 hours is certified by NIOSH/MSHA. After this 18 month phase-in period, all self-contained breathing apparatus used for these long duration situations will have to be of the positive-pressure type.

Protection factor (sometimes called fit factor) is defined as the ratio of the contaminant concentrations outside of the respirator to the contaminant concentrations inside the facepiece of the respirator.

$$PF = \frac{\text{Concentration outside respirator}}{\text{Concentration inside facepiece}}$$

Protection factors are determined by quantitative fit tests. An acceptable quantitative fit test should include the following elements:

1. A fire brigade member who is physically and medically capable of wearing respirators, and who is trained in the use of respirators, dons a self-contained breathing apparatus equipped with a device that will monitor the concentration of a contaminant inside the facepiece.

2. The fire brigade member then performs a qualitative fit test to assure the best face to facepiece seal as possible. A qualitative fit test can consist of a negative-pressure test, positive-pressure test, isoamyl acetate vapor (banana oil) test, or an irritant smoke test. For more details on respirator fitting see the NIOSH booklet entitled "A Guide to Industrial Respiratory Protection" June, 1976, and HEW publication No. (NIOSH) 76-189.

3. The wearer should then perform physical activity which reflects the level of work activity which would be expected during fire fighting activities. The physical activity should include simulated fire-ground work activity or physical exercise such as running-in-place, a step test, etc.

4. Without readjusting the apparatus, the wearer is placed in a test atmosphere containing a non-toxic contaminant with a known, constant, concentration.

The protection factor is then determined by dividing the known concentration of the contaminant in the test atmosphere by the concentration of the contaminant inside the facepiece when the following exercises are performed:

(a) Normal breathing with head motionless for one minute;

(b) Deep breathing with head motionless for 30 seconds;

(c) Turning head slowly from side to side while breathing normally, pausing for at least two breaths before changing direction. Continue for at least one minute;

(d) Moving head slowly up and down while breathing normally, pausing for at least two breaths before changing direction. Continue for at least two minutes;

(e) Reading from a prepared text, slowly and clearly, and loudly enough to be heard and understood. Continue for one minute; and

(f) Normal breathing with head motionless for at least one minute.

The protection factor which is determined must be at least 5,000. The quantitative fit test should be conducted at least three times. It is acceptable to conduct all three tests on the same day. However, there should be at least one hour between tests to reflect the protection afforded by the apparatus during different times of the day.

The above elements are not meant to be a comprehensive, technical description of a quantitative fit test protocol. However, quantitative fit test procedures which include these elements are acceptable for determining protection factors. Procedures for a quantitative fit test are required to be available for inspection by the Assistant Secretary or authorized representative.

Organizations such as Los Alamos Scientific Laboratory, Lawrence Livermore Laboratory, NIOSH, and American National Standards Institute (ANSI) are excellent sources for additional information concerning qualitative and quantitative fit testing.

§ 1910.157 Portable fire extinguishers.

1. *Scope and application.* The scope and application of this section is written to apply to three basic types of workplaces. First, there are those workplaces where the employer has chosen to evacuate all employees from the workplace at the time of a fire emergency. Second, there are those workplaces where the employer has chosen to permit certain employees to fight fires and to evacuate all other non-essential employees at the time of a fire emergency. Third, there are those workplaces where the employer has chosen to permit all employees in the workplace to use portable fire extinguishers to fight fires.

The section also addresses two kinds of work areas. The entire workplace can be divided into outside (exterior) work areas and inside (interior) work areas. This division of the workplace into two areas is done in recognition of the different types of hazards employees may be exposed to during fire fighting operations. Fires in interior workplaces, pose a greater hazard to employees; they can produce greater exposure to quantities of smoke, toxic gases, and heat because of the capability of a building or structure to contain or entrap these products of combustion until the building can be ventilated. Exterior work areas, normally open to the environment, are somewhat less hazardous, because the products of combustion are generally carried away by the thermal column of the fire. Employees also have a greater selection of evacuation routes if it is necessary to abandon fire fighting efforts.

In recognition of the degree of hazard present in the two types of work areas, the standards for exterior work areas are somewhat less restrictive in regards to extinguisher distribution. Paragraph (a) explains this by specifying which paragraphs in the section apply.

2. *Portable fire extinguisher exemptions.* In recognition of the three options given to employers in regard to the amount of employee evacuation to be carried out, the standards permit certain exemptions based on the number of employees expected to use fire extinguishers.

Where the employer has chosen to totally evacuate the workplace at the time of a fire emergency and when fire extinguishers are not provided, the requirements of this section do not apply to that workplace.

Where the employer has chosen to partially evacuate the workplace or the effected area at the time of a fire emergency and has permitted certain designated employees to remain behind to operate critical plant operations or to fight fires with extinguishers, then the employer is exempt from the distribution requirements of this section. Employees who will be remaining behind to perform incipient fire fighting or members of a fire brigade must be trained in their duties. The training must result in the employees becoming familiar with the locations of fire extinguishers. Therefore, the employer must locate the extinguishers in convenient locations where the employees know they can be found. For example, they could be mounted in the fire truck or cart that the fire brigade uses when it responds to a fire emergency. They can also be distributed as set forth in the National Fire Protection Association's Standard No. 10, "Portable Fire Extinguishers."

Where the employer has decided to permit all employees in the workforce to use fire extinguishers, then the entire OSHA standard applies.

3. *Portable fire extinguisher mounting.* Previous standards for mounting fire extinguishers have been criticized for requiring specific mounting locations. In recognition of this criticism, the standard has been rewritten to permit as much flexibility in extinguisher mounting as is acceptable to assure that fire extinguishers are available when needed and that employees are not subjected to injury hazards when they try to obtain an extinguisher.

It is the intent of OSHA to permit the mounting of extinguishers in any location that is accessible to employees without the use of portable devices such as a ladder. This limitation is necessary because portable devices can be moved or taken from the place where they are needed and, therefore, might not be available at the time of an emergency.

Employers are given as much flexibility as possible to assure that employees can obtain extinguishers as fast as possible. For example, an acceptable method of mounting extinguishers in areas where fork lift trucks or tow-motors are used is to mount the units on retractable boards which, by means of

counterweighting, can be raised above the level where they could be struck by vehicular traffic. When needed, they can be lowered quickly for use. This method of mounting can also reduce vandalism and unauthorized use of extinguishers. The extinguishers may also be mounted as outlined in the National Fire Protection Association's Standard No. 10, "Portable Fire Extinguishers."

4. *Selection and distribution.* The employer is responsible for the proper selection and distribution of fire extinguishers and the determination of the necessary degree of protection. The selection and distribution of fire extinguishers must reflect the type and class of fire hazards associated with a particular workplace.

Extinguishers for protecting Class A hazards may be selected from the following types: water, foam, loaded stream, or multipurpose dry chemical. Extinguishers for protecting Class B hazards may be selected from the following types: Halon 1301, Halon 1211, carbon dioxide, dry chemicals, foam, or loaded stream. Extinguishers for Class C hazards may be selected from the following types: Halon 1301, Halon 1211, carbon dioxide, or dry chemical.

Combustible metal (Class D hazards) fires pose a different type of fire problem in the workplace. Extinguishers using water, gas, or certain dry chemicals cannot extinguish or control this type of fire. Therefore, certain metals have specific dry powder extinguishing agents which can extinguish or control this type of fire. Those agents which have been specifically approved for use on certain metal fires provide the best protection; however, there are also some "universal" type agents which can be used effectively on a variety of combustible metal fires if necessary. The "universal" type agents include: Foundry flux, Lith-X powder, TMB liquid, pyromet powder, TEC powder, dry talc, dry graphite powder, dry sand, dry sodium chloride, dry soda ash, lithium chloride, zirconium silicate, and dry dolomite.

Water is not generally accepted as an effective extinguishing agent for metal fires. When applied to hot burning metal, water will break down into its basic atoms of oxygen and hydrogen. This chemical breakdown contributes to the combustion of the metal. However, water is also a good universal coolant and can be used on some combustible metals, but only under proper conditions and application, to reduce the temperature of the burning metal below the ignition point. For example, automatic deluge systems in magnesium plants can discharge such large quantities of water on burning magnesium that the fire will be extinguished. The National Fire Protection Association has specific standards for this type of automatic sprinkler system. Further information on the control of metal fires with water can be found in the National Fire Protection Association's *Fire Protection Handbook.*

An excellent source of selection and distribution criteria is found in the National Fire Protection Association's Standard No. 10. Other sources of information include the National Safety Council and the employer's fire insurance carrier.

5. *Substitution of standpipe systems for portable fire extinguishers.* The employer is permitted to substitute acceptable standpipe systems for portable fire extinguishers under certain circumstances. It is necessary to assure that any substitution will provide the same coverage that portable units provide. This means that fire hoses, because of their limited portability, must be spaced throughout the protected area so that they can reach around obstructions such as columns, machinery, etc. and so that they can reach into closets and other enclosed areas.

6. *Inspection, maintenance and testing.* The ultimate responsibility for the inspection, maintenance and testing of portable fire extinguishers lies with the employer. The actual inspection, maintenance, and testing may, however, be conducted by outside contractors with whom the employer has arranged to do the work. When contracting for such work, the employer should assure that the contractor is capable of performing the work that is needed to comply with this standard.

If the employer should elect to perform the inspection, maintenance, and testing requirements of this section in-house, then the employer must make sure that those persons doing the work have been trained to do the work and to recognize problem areas which could cause an extinguisher to be inoperable. The National Fire Protection Association provides excellent guidelines in its standard for portable fire extinguishers. The employer may also check with the manufacturer of the unit that has been purchased and obtain guidelines on inspection, maintenance, and testing. Hydrostatic testing is a process that should be left to contractors or individuals using suitable facilities and having the training necessary to perform the work.

Anytime the employer has removed an extinguisher from service to be checked or repaired, alternate equivalent protection must be provided. Alternate equivalent protection could include replacing the extinguisher with one or more units having equivalent or equal ratings, posting a fire watch, restricting the unprotected area from employee exposure, or providing a hose system ready to operate.

7. *Hydrostatic testing.* As stated before, the employer may contract for hydrostatic testing. However, if the employer wishes to provide the testing service, certain equipment and facilities must be available. Employees should be made aware of the hazards associated with hydrostatic testing and the importance of using proper guards and water pressures. Severe injury can result if extinguisher shells fail violently under hydrostatic pressure.

Employers are encouraged to use contractors who can perform adequate and reliable service. Firms which have been certified by the Materials Transportation Board (MTB) of the U.S. Department of Transportation (DOT) or State licensed extinguisher servicing firms or recognized by the National Association of Fire Equipment Distributors in Chicago, Illinois, are generally acceptable for performing this service.

8. *Training and education.* This part of the standard is of the utmost importance to employers and employees if the risk of injury or death due to extinguisher use is to be reduced. If an employer is going to permit an employee to fight a workplace fire of any size, the employer must make sure that the employee knows everything necessary to assure the employee's safety.

Training and education can be obtained through many channels. Often, local fire departments in larger cities have fire prevention bureaus or similar organizations which can provide basic fire prevention training programs. Fire insurance companies will have data and information available. The National Fire Protection Association and the National Safety Council will provide, at a small cost, publications that can be used in a fire prevention program.

Actual fire fighting training can be obtained from various sources in the country. The Texas A & M University, the University of Maryland's Fire and Rescue Institute, West Virginia University's Fire Service Extension, Iowa State University's Fire Service Extension and other State training schools and land grant colleges have fire fighting programs directed to industrial applications. Some manufacturers of extinguishers, such as the Ansul Company and Safety First, conduct fire schools for customers in the proper use of extinguishers. Several large corporations have taken time to develop their own on-site training programs which expose employees to the actual "feeling" of fire fighting. Simulated fires for training of employees in the proper use of extinguishers are also an acceptable part of a training program.

In meeting the requirements of this section, the employer may also provide educational materials, without classroom instruction, through the use of employee notice campaigns using instruction sheets or flyers or similar types of informal programs. The employer must make sure that employees are trained and educated to recognize not only what type of fire is being fought and how to fight it, but also when it is time to get away from it and leave fire suppression to more experienced fire fighters.

§ *1910.158 Standpipe and hose systems.*

1. *Scope and application.* This section has been written to provide adequate coverage of those standpipe and hose systems that an employer may install in the workplace to meet the requirements of a particular OSHA standard. For example, OSHA permits the substitution of hose systems for portable fire extinguishers in § 1910.157. If an employer chooses to provide hose systems instead of portable Class A fire extinguishers, then those hose systems used for substitution would have to meet the applicable requirements of § 1910.157. All other standpipe and hose systems not used as a substitute would be exempt from these requirements.

The section specifically exempts Class I large hose systems. By large hose systems, OSHA means those 2½" hose lines that are usually associated with fire departments of the size that provide their own water supply through fire apparatus. When the fire gets to the size that outside protection of that degree is necessary, OSHA believes that in most industries employees will have been evacuated from the fire area and the "professional" fire fighters will take control.

2. *Protection of standpipes.* Employers must make sure that standpipes are protected

so that they can be relied upon during a fire emergency. This means protecting the pipes from mechanical and physical damage. There are various means for protecting the equipment such as, but not limited to, enclosing the supply piping in the construction of the building, locating the standpipe in an area which is inaccessible to vehicles, or locating the standpipe in a stairwell.

3. *Hose covers and cabinets.* The employer should keep fire protection hose equipment in cabinets or inside protective covers which will protect it from the weather elements, dirt or other damaging sources. The use of protective covers must be easily removed or opened to assure that hose and nozzle are accessible. When the employer places hose in a cabinet, the employer must make sure that the hose and nozzle are accessible to employees without subjecting them to injury. In order to make sure that the equipment is readily accessible, the employer must also make sure that the cabinets used to store equipment are kept free of obstructions and other equipment which may interfere with the fast distribution of the fire hose stored in the cabinet.

4. *Hose outlets and connections.* The employer must assure that employees who use standpipe and hose systems can reach the hose rack and hose valve without the use of portable equipment such as ladders. Hose reels are encouraged for use because one employee can retrieve the hose, charge it, and place it into service without much difficulty.

5. *Hose.* When the employer elects to provide small hose in lieu of portable fire extinguishers, those hose stations being used for the substitution must have hose attached and ready for service. However, if more than the necessary amount of small hose outlets are provided, hose does not have to be attached to those outlets that would provide redundant coverage. Further, where the installation of hose on outlets may expose the hose to extremely cold climates, the employer may store the hose in houses or similar protective areas and connect it to the outlet when needed.

There is approved lined hose available that can be used to replace unlined hose which is stored on racks in cabinets. The lined hose is constructed so that it can be folded and placed in cabinets in the same manner as unlined hose.

Hose is considered to be unserviceable when it deteriorates to the extent that it can no longer carry water at the required pressure and flow rates. Dry rotted linen or hemp hose, cross threaded couplings, and punctured hose are examples of unserviceable hose.

6. *Nozzles.* Variable stream nozzles can provide useful variations in water flow and spray patterns during fire fighting operations and they are recommended for employee use. It is recommended that 100 psi nozzle pressure be used to provide good flow patterns for variable stream nozzles. The most desirable attribute for nozzles is the ability of the nozzle person to shut off the water flow at the nozzle when it is necessary. This can be accomplished in many ways. For example, a shut-off nozzle with a lever or rotation of the nozzle to stop flow would be effective, but in other cases a simple globe valve placed between a straight stream nozzle and the hose could serve the same purpose. For straight stream nozzles 50 psi nozzle pressure is recommended. The intent of this standard is to protect the employee from "run-away" hoses if it becomes necessary to drop a pressurized hose line and retreat from the fire front and other related hazards.

7. *Design and installation.* Standpipe and hose systems designed and installed in accordance with NFPA Standard No. 14–1976, "Standpipe and Hose Systems," are considered to be in compliance with this standard.

§ *1910.159 Automatic sprinkler systems.*

1. *Scope and application.* This section contains the minimum requirements for design, installation and maintenance of sprinkler systems that are needed for employee safety. The Occupational Safety and Health Administration is aware of the fact that the National Board of Fire Underwriters is no longer an active organization, however, sprinkler systems still exist that were designed and installed in accordance with that organization's standards. Therefore, OSHA will recognize sprinkler systems designed to, and maintained in accordance with, NBFU and earlier NFPA standards.

2. *Exemptions.* In an effort to assure that employers will continue to use automatic sprinkler systems as the primary fire protection system in workplaces, OSHA is exempting from coverage those systems not required by a particular OSHA standard and which have been installed in workplaces solely for the purpose of protecting property. Many of these types of systems are installed in areas or buildings with little or no employee exposure. An example is those warehouses where employees may enter occasionally to take inventory or move stock. Some employers may choose to shut down those systems which are not specifically required by OSHA rather than upgrade them to comply with the standards. OSHA does not intend to regulate such systems. OSHA only intends to regulate those systems which are installed to comply with a particular OSHA standard.

3. *Design.* There are two basic types of sprinkler system design. Pipe schedule designed systems are based on pipe schedule tables developed to protect hazards with standard sized pipe, number of sprinklers, and pipe lengths. Hydraulic designed systems are based on an engineered design of pipe size which will produce a given water density or flow rate at any particular point in the system. Either design can be used to comply with this standard.

The National Fire Protection Association's Standard No. 13, "Automatic Sprinkler Systems," contains the tables needed to design and install either type of system. Minimum water supplies, densities, and pipe sizes are given for all types of occupancies.

The employer may check with a reputable fire protection engineering consultant or sprinkler design company when evaluating existing systems or designing a new installation.

With the advent of new construction materials for the manufacuture of sprinkler pipe, materials, other than steel have been approved for use as sprinkler pipe. Selection of pipe material should be made on the basis of the type of installation and the acceptability of the material to local fire and building officials where such systems may serve more than one purpose.

Before new sprinkler systems are placed into service, an acceptance test is to be conducted. The employer should invite the installer, designer, insurance representative, and a local fire official to witness the test. Problems found during the test are to be corrected before the system is placed into service.

4. *Maintenance.* It is important that any sprinkler system maintenance be done only when there is minimal employee exposure to the fire hazard. For example, if repairs or changes to the system are to be made, they should be made during those hours when employees are not working or are not occupying that portion of the workplace protected by the portion of the system which has been shut down.

The procedures for performing a flow test via a main drain test or by the use of an inspector's test valve can be obtained from the employer's fire insurance company or from the National Fire Protection Association's Standard No. 13A, "Sprinkler System, Maintenance."

5. *Water supplies.* The water supply to a sprinkler system is one of the most important factors an employer should consider when evaluationg a system. Obviously, if there is no water supply, the system is useless. Water supplies can be lost for various reasons such as improperly closed valves, excessive demand, broken water mains, and broken fire pumps. The employer must be able to determine if or when this type of condition exists either by performing a main drain test or visual inspection. Another problem may be an inadequate water supply. For example, a light hazard occupancy may, through rehabilitation or change in tenants, become an ordinary or high hazard occupancy. In such cases, the existing water supply may not be able to provide the pressure or duration necessary for proper protection. Employers must assure that proper design and tests have been made to assure an adequate water supply. These tests can be arranged through the employer's fire insurance carrier or through a local sprinkler maintenance company or through the local fire prevention organization.

Anytime the employer must shut down the primary water supply for a sprinkler system, the standard requires that equivalent protection be provided. Equivalent protection may include a fire watch with extinguishers or hose lines in place and manned, or a secondary water supply such as a tank truck and pump, or a tank or fire pond with fire pumps, to protect the areas where the primary water supply is limited or shut down. The employer may also require evacuation of the workplace and have an emergency action plan which specifies such action.

6. *Protection of piping.* Piping which is exposed to corrosive atmospheres, either chemical or natural, can become defective to

the extent that it is useless. Employers must assure that piping is protected from corrosion by its material of construction, e.g., stainless steel, or by a protective coating, e.g., paint.

7. *Sprinklers.* When an employer finds it necessary to replace sprinkler system components or otherwise change a sprinkler's design, employer should make a complete fire protection engineering survey of that part of the system being changed. This review should assure that the changes to the system will not alter the effectiveness of the system as it is presently designed. Water supplies, densities and flow characteristics should be maintained.

8. *Protection of sprinklers.* All components of the system must be protected from mechanical impact damage. This can be achieved with the use of mechanical guards or screens or by locating components in areas where physical contact is impossible or limited.

9. *Sprinkler alarms.* The most recognized sprinkler alarm is the water motor gong or bell that sounds when water begins to flow through the system. This is not however, the only type of acceptable water flow alarm. Any alarm that gives an indication that water is flowing through the system is acceptable. For example, a siren, a whistle, a flashing light, or similar alerting device which can transmit a signal to the necessary persons would be acceptable. The purpose of the alarm is to alert persons that the system is operating, and that some type of planned action is necessary.

10. *Sprinkler spacing.* For a sprinkler system to be effective there must be an adequate discharge of water spray from the sprinkler head. Any obstructions which hinder the designed density or spray pattern of the water may create unprotected areas which can cause fire to spread. There are some sprinklers that, because of the system's design, are deflected to specific areas. This type of obstruction is acceptable if the system's design takes it into consideration in providing adequate coverage.

§ 1910.160 Fixed extinguishing systems, general.

1. *Scope and application.* This section contains the general requirements that are applicable to all fixed extinguishing systems installed to meet OSHA standards. It also applies to those fixed extinguishing systems, generally total flooding, which are not required by OSHA, but which, because of the agent's discharge, may expose employees to hazardous concentrations of extinguishing agents or combustion by-products. Employees who work around fixed extinguishing systems must be warned of the possible hazards associated with the system and its agent. For example, fixed dry chemical extinguishing systems may generate a large enough cloud of dry chemical particles that employees may become visually disoriented. Certain gaseous agents can expose employees to hazardous by-products of combustion when the agent comes into contact with hot metal or other hot surface. Some gaseous agents may be present in hazardous concentrations when the system has totally discharged because an extra rich concentration is necessary to extinguish deep-seated fires. Certain local application systems may be designed to discharge onto the flaming surface of a liquid, and it is possible that the liquid can splatter when hit with the discharging agent. All of these hazards must be determined before the system is placed into operation, and must be discussed with employees.

Based on the known toxicological effects of agents such as carbon tetrachloride and chlorobromomethane, OSHA is not permitting the use of these agents in areas where employees can be exposed to the agent or its side effects. However, chlorobromomethane has been accepted and may be used as an explosion suppression agent in unoccupied spaces. OSHA is permitting the use of this agent only in areas where employees will not be exposed.

2. *Distinctive alarm signals.* A distinctive alarm signal is required to indicate that a fixed system is discharging. Such a signal is necessary on those systems where it is not immediately apparent that the system is discharging. For example, certain gaseous agents make a loud noise when they discharge. In this case no alarm signal is necessary. However, where systems are located in remote locations or away from the general work area and where it is possible that a system could discharge without anyone knowing that it is doing so, then a distinctive alarm is necessary to warn employees of the hazards that may exist. The alarm can be a bell, gong, whistle, horn, flashing light, or any combination of signals as long as it is identifiable as a discharge alarm.

3. *Maintenance.* The employer is responsible for the maintenance of all fixed systems, but this responsibility does not preclude the use of outside contractors to do such work. New systems should be subjected to an acceptance test before placed in service. The employer should invite the installer, designer, insurance representative and others to witness the test. Problems found during the test need to be corrected before the system is considered operational.

4. *Manual discharge stations.* There are instances, such as for mechanical reasons and others, where the standards call for a manual back-up activation device. While the location of this device is not specified in the standard, the employer should assume that the device should be located where employees can easily reach it. It could, for example, be located along the main means of egress from the protected area so that employees could activate the system as they evacuate the work area.

5. *Personal protective equipment.* The employer is required to provide the necessary personal protective equipment to rescue employees who may be trapped in a totally flooded environment which may be hazardous to their health. This equipment would normally include a positive-pressure self-contained breathing apparatus and any necessary first aid equipment. In cases where the employer can assure the prompt arrival of the local fire department or plant emergency personnel which can provide the equipment, this can be considered as complying with the standards.

§ 1910.161 Fixed extinguishing systems, dry chemical.

1. *Scope and application.* The requirements of this section apply only to dry chemical systems. These requirements are to be used in conjunction with the requirements of § 1910.160.

2. *Maintenance.* The employer is responsible for assuring that dry chemical systems will operate effectively. To do this, periodic maintenance is necessary. One test that must be conducted during the maintenance check is one which will determine if the agent has remained free of moisture. If an agent absorbs any moisture, it may tend to cake and thereby clog the system. An easy test for acceptable moisture content is to take a lump of dry chemical from the container and drop it from a height of four inches. If the lump crumbles into fine particles, the agent is acceptable.

§ 1910.162 Fixed extinguishing systems, gaseous agent.

1. *Scope and application.* This section applies only to those systems which use gaseous agents. The requirements of § 1910.160 also apply to the gaseous agent systems covered in this section.

2. *Design concentrations.* Total flooding gaseous systems are based on the volume of gas which must be discharged in order to produce a certain designed concentration of gas in an enclosed area. The concentration needed to extinguish a fire depends on several factors including the type of fire hazard and the amount of gas expected to leak away from the area during discharge. At times it is necessary to "super-saturate" a work area to provide for expected leakage from the enclosed area. In such cases, employers must assure that the flooded area has been ventilated before employees are permitted to reenter the work area without protective clothing and respirators.

3. *Toxic decomposition.* Certain halogenated hydrocarbons will break down or decompose when they are combined with high temperatures found in the fire environment. The products of the decomposition can include toxic elements or compounds. For example, when Halon 1211 is placed into contact with hot metal it will break down and form bromide or fluoride fumes. The employer must find out which toxic products may result from decomposition of a particular agent from the manufacturer, and take the necessary precautions to prevent employee exposure to the hazard.

§ 1910.163 Fixed extinguishing systems, water spray and foam.

1. *Scope and application.* This section applies to those systems that use water spray or foam. The requirements of § 1910.160 also apply to this type of system.

2. *Characteristics of foams.* When selecting the type of foam for a specific hazard, the employer should consider the following limitations of some foams.

a. Some foams are not acceptable for use on fires involving flammable gases and liquefied gases with boiling points below ambient workplace temperatures. Other foams are not effective when used on fires involving polar solvent liquids.

b. Any agent using water as part of the mixture should not be used on fire involving combustible metals unless it is applied under proper conditions to reduce the temperature of burning metal below the ignition temperature. The employer should use only those foams that have been tested and accepted for this application by a recognized independent testing laboratory.

c. Certain types of foams may be incompatible and break down when they are mixed together.

d. For fires involving water miscible solvents, employers should use only those foams tested and approved for such use. Regular protein foams may not be effective on such solvents.

Whenever employers provide a foam or water spray system, drainage facilities must be provided to carry contaminated water or foam overflow away from the employee work areas and egress routes. This drainage system should drain to a central impounding area where it can be collected and disposed of properly. Other government agencies may have regulations concerning environmental considerations.

§ *1910.164 Fire detection systems.*

1. *Installation and restoration.* Fire detection systems must be designed by knowledgeable engineers or other professionals, with expertise in fire detection systems and when the systems are installed, there should be an acceptance test performed on the system to insure it operates properly. The manufacturer's recommendations for system design should be consulted. While entire systems may not be approved, each component used in the system is required to be approved. Custom fire detection systems should be designed by knowledgeable fire protection or electrical engineers who are familiar with the workplace hazards and conditions. Some systems may only have one or two individual detectors for a small workplace, but good design and installation is still important. An acceptance test should be performed on all systems, including these smaller systems.

OSHA has a requirement that spare components used to replace those which may be destroyed during an alarm situation be available in sufficient quantities and locations for prompt restoration of the system. This does not mean that the parts or components have to be stored at the workplace. If the employer can assure that the supply of parts is available in the local community or the general metropolitan area of the workplace, then the requirements for storage and availability have been met. The intent is to make sure that the alarm system is fully operational when employees are occupying the workplace, and that when the system operates it can be returned to full service the next day or sooner.

2. *Supervision.* Fire detection systems should be supervised. The object of supervision is detection of any failure of the circuitry, and the employer should use any method that will assure that the system's circuits are operational. Electrically operated sensors for air pressure, fluid pressure, or electrical circuits, can provide effective monitoring and are the typical types of supervision.

3. *Protection of fire detectors.* Fire detectors must be protected from corrosion either by protective coatings, by being manufactured from non-corrosive materials or by location. Detectors must also be protected from mechanical impact damage, either by suitable cages or metal guards where such hazards are present, or by locating them above or out of contact with materials or equipment which may cause damage.

4. *Number, location, and spacing of detectors.* This information can be obtained from the approval listing for detectors or NFPA standards. It can also be obtained from fire protection engineers or consultants or manufacturers of equipment who have access to approval listings and design methods.

§ *1910.165 Employee alarm systems.*

1. *Scope and application.* This section is intended to apply to employee alarm systems used for all types of employee emergencies except those which occur so quickly and at such a rapid rate (e.g., explosions) that any action by the employee is extremely limited following detection.

In small workplaces with 10 or less employees the alarm system can be by direct voice communication (shouting) where any one individual can quickly alert all other employees. Radio may be used to transmit alarms from remote workplaces where telephone service is not available, provided that radio messages will be monitored by emergency services, such as fire, police or others, to insure alarms are transmitted and received.

2. *Alarm signal alternatives.* In recognition of physically impaired individuals, OSHA is accepting various methods of giving alarm signals. For example, visual, tactile or audible alarm signals are acceptable methods for giving alarms to employees. Flashing lights or vibrating devices can be used in areas where the employer has hired employees with hearing or vision impairments. Vibrating devices, air fans, or other tactile devices can be used where visually and hearing impaired employees work. Employers are cautioned that certain frequencies of flashing lights have been claimed to initiate epileptic seizures in some employees and that this fact should be considered when selecting an alarm device. Two way radio communications would be most appropriate for transmitting emergency alarms in such workplaces which may be remote or where telephones may not be available.

3. *Reporting alarms.* Employee alarms may require different means of reporting, depending on the workplace involved. For example, in small workplaces, a simple shout throughout the workplace may be sufficient to warn employees of a fire or other emergency. In larger workplaces, more sophisticated equipment is necessary so that entire plants or high-rise buildings are not evacuated for one small emergency. In remote areas, such as pumping plants, radio communication with a central base station may be necessary. The goal of this standard is to assure that all employees who need to know that an emergency exists can be notified of the emergency. The method of transmitting the alarm should reflect the situation found at the workplace.

Personal radio transmitters, worn by an individual, can be used where the individual may be working such as in a remote location. Such personal radio transmitters shall send a distinct signal and should clearly indicate who is having an emergency, the location, and the nature of the emergency. All radio transmitters need a feedback system to assure that the emergency alarm is sent to the people who can provide assistance.

For multi-story buildings or single story buildings with interior walls for subdivisions, the more traditional alarm systems are recommended for these types of workplaces. Supervised telephone or manual fire alarm or pull box stations with paging systems to transmit messages throughout the building is the recommended alarm system. The alarm box stations should be available within a travel distance of 200 feet. Water flow detection on a sprinkler system, fire detection systems (guard's supervisory station) or tour signal (watchman's service), or other related systems may be part of the overall system. The paging system may be used for nonemergency operations provided the emergency messages and uses will have precedence over all other uses of the system.

4. *Supervision.* The requirements for supervising the employee alarm system circuitry and power supply may be accomplished in a variety of ways. Typically, electrically operated sensors for air pressure, fluid pressure, steam pressure, or electrical continuity of circuitry may be used to continuously monitor the system to assure it is operational and to identify trouble in the system and give a warning signal.

Appendix B to Subpart L

National Consensus Standards

The following table contains a cross-reference listing of those current national consensus standards which contains information and guidelines that would be considered acceptable in complying with requirements in the specific sections of Subpart L.

Subpart L section	National consensus standard
1910.156	ANSI/NFPA No. 1972; Structural Fire Fighter's Helmets.
	ANSI Z88.5 American National Standard, Practice for Respirator Protection for the Fire Service.
	ANSI/NFPA No. 1971, Protective Clothing for Structural Fire Fighters.
	NFPA No. 1041, Fire Service Instructor Professional Qualifications.
1910.157	ANSI/NFPA No. 10, Portable Fire Extinguishers.
1910.158	ANSI/NFPA No. 18, Wetting Agents.
	ANSI/NFPA No. 20, Centrifugal Fire Pumps.
	NFPA No. 21, Steam Fire Pumps.
	ANSI/NFPA No. 22, Water Tanks.
	NFPA No. 24, Outside Protection.
	NFPA No. 26, Supervision of Valves.

Subpart L section	National consensus standard
	NFPA No. 13E, Fire Department Operations in Properties Protected by Sprinkler, Standpipe Systems.
	ANSI/NFPA No. 194, Fire Hose Connections.
	NFPA No. 197, Initial Fire Attack, Training for.
	NFPA No. 1231, Water Supplies for Suburban and Rural Fire Fighting.
1910.159	ANSI-NFPA No. 13, Sprinkler Systems.
	NFPA No. 13A, Sprinkler Systems, Maintenance.
	ANSI/NFPA No. 18, Wetting Agents.
	ANSI/NFPA No. 20, Centrifugal Fire Pumps.
	ANSI/NFPA No. 22, Water Tanks.
	NFPA No. 24, Outside Protection.
	NFPA No. 26, Supervision of Valves.
	ANSI/NFPA No. 72B, Auxiliary Signaling Systems.
	NFPA No. 1231, Water Supplies for Suburban and Rural Fire Fighting.
1910.160	ANSI/NFPA No. 11, Foam Systems.
	ANSI/NFPA 11A, High Expansion Foam Extinguishing Systems.
	ANSI/NFPA No. 11B, Synthetic Foam and Combined Agent Systems.
	ANSI/NFPA No. 12, Carbon Dioxide Systems.
	ANSI/NFPA No. 12A, Halon 1301 Systems.
	ANSI/NFPA No. 12B, Halon 1211 Systems.
	ANSI/NFPA No. 15, Water Spray Systems.
	ANSI/NFPA 16 Foam-Water Spray Systems.
	ANSI/NFPA No. 17, Dry Chemical Systems.
	ANSI/NFPA 69, Explosion Suppression Systems.
1910.161	ANSI/NFPA No. 11B, Synthetic Foam and Combined Agent Systems.
	ANSI/NFPA No. 17, Dry Chemical Systems.
1910.162	ANSI/NFPA No. 12, Carbon Dioxide Systems.
	ANSI/NFPA No. 12A, Halon 1211 Systems.
	ANSI/NFPA No. 12B, Halon 1301 Systems.
	ANSI/NFPA No. 69, Explosion Suppression Systems.
1910.163	ANSI/NFPA No. 11, Foam Extinguishing Systems.
	ANSI/NFPA No. 11A, High Expansion Foam Extinguishing Systems.
	ANSI/NFPA No. 11B, Synthetic Foam and Combined Agent Systems.
	ANSI/NFPA No. 15, Water Spray Fixed Systems.
	ANSI/NFPA No. 16, Foam-Water Spray Systems.
	ANSI/NFPA No. 18, Wetting Agents.
	NFPA No. 26, Supervision of Valves.
1910.164	ANSI/NFPA No. 71, Central Station Signaling Systems.
	ANSI/NFPA No. 72A, Local Protective Signaling Systems.
	ANSI/NFPA No. 72B, Auxiliary Signaling Systems.
	ANSI/NFPA No. 72D, Proprietary Protective Signaling Systems.
	ANSI/NFPA No. 72E, Automatic Fire Detectors.
	ANSI/NFPA No. 101, Life Safety Code.
1910.165	ANSI/NFPA No. 71, Central Station Signaling Systems.
	ANSI/NFPA No. 72A, Local Protective Signaling Systems.
	ANSI/NFPA No. 72B, Auxiliary Protective Signaling Systems.
	ANSI/NFPA No. 72C, Remote Station Protective Signaling Systems.
	ANSI/NFPA No. 72D, Proprietary Protective Signaling Systems.
	ANSI/NFPA No. 101, Life Safety Code.
Metric Conversion	ANSI/ASTM No. E380, American National Standard for Metric Practice.

NFPA standards are available from the National Fire Protection Association, 470 Atlantic Avenue, Boston, MA 03210.

ANSI Standards are available from the American National Standards Institute, 1430 Broadway, New York, NY 10018.

Appendix C to Subpart L

Fire Protection References for Further Information

I. *Appendix general references.* The following references provide information which can be helpful in understanding the requirements contained in all of the sections of Subpart L:

A. *Fire Protection Handbook,* National Fire Protection Association; 470 Atlantic Avenue, Boston, MA 02210.

B. *Accident Prevention Manual for Industrial Operations,* National Safety Council; 425 North Michigan Avenue, Chicago, IL 60611.

C. Various associations also publish information which may be useful in understanding these standards. Examples of these associations are: Fire Equipment Manufacturers Association (FEMA) of Arlington, VA 22204 and the National Association of Fire Equipment Distributors (NAFED) of Chicago, IL 60601.

II. *Appendix references applicable to individual sections.* The following references are grouped according to individual sections contained in Subpart L. These references provide information which may be helpful in understanding and implementing the standards of each section of Subpart L.

A. § *1910.156. Fire brigades:*

1. *Private Fire Brigades,* NFPA 27; National Fire Protection Association, 470 Atlantic Avenue, Boston, MA 02210.

2. *Initial Fire Attack, Training Standard On,* NFPA 197; National Fire Protection Association, 470 Atlantic Avenue, Boston, MA 02210.

3. *Fire Fighter Professional Qualifications,* NFPA 1001; National Fire Protection Association, 470 Atlantic Avenue, Boston, MA 02210.

4. *Organization for Fire Services,* NFPA 1201; National Fire Protection Association, 470 Atlantic Avenue, Boston, MA 02210.

5. *Organization of a Fire Department,* NFPA 1202; National Fire Protection Association, 470 Atlantic Avenue, Boston, MA 02210.

6. *Protective Clothing for Structural Fire Fighting,* ANSI/NFPA 1971; National Fire Protection Association, 470 Atlantic Avenue, Boston, MA 02210.

7. *American National Standard for Men's Safety-Toe Footwear,* ANSI Z41.1; American National Standards Institute, New York, NY 10018.

8. *American National Standard for Occupational and Educational Eye and Face Protection,* ANSI Z87.1; American National Standards Institute, New York, NY 10018.

9. *American National Standard, Safety Requirements for Industrial Head Protection,* ANSI Z89.1; American National Standards Institute, New York, NY 10018.

10. *Specifications for Protective Headgear for Vehicular Users,* ANSI Z90.1; American National Standards Institute, New York, NY 10018.

11. *Testing Physical Fitness;* Davis and Santa Maria. *Fire Command.* April 1975.

12. *Development of a Job-Related Physical Performance Examination for Fire Fighters;* Dotson and Others. A summary report for the National Fire Prevention and Control Administration. Washington, DC. March 1977.

13. *Proposed Sample Standards for Fire Fighters' Protective Clothing and Equipment;* International Association of Fire Fighters, Washington, DC.

14. *A Study of Facepiece Leakage of Self-Contained Breathing Apparatus by DOP Man Tests;* Los Alamos Scientific Laboratory, Los Alamos, NM.

15. *The Development of Criteria for Fire Fighters' Gloves; Vol. II: Glove Criteria and Test Methods;* National Institute for Occupational Safety and Health, Cincinnati, OH. 1976.

16. *Model Performance Criteria for Structural Fire Fighters' Helmets;* National Fire Prevention and Control Administration, Washington, DC. 1977.

17. *Firefighters;* Job Safety and Health Magazine, Occupational Safety and Health Administration, Washington, DC. June 1976.

18. *Eating Smoke—The Dispensable Diet;* Utech, H.P. The Fire Independent, 1975.

19. *Project Monoxide—A Medical Study of an Occupational Hazard of Fire Fighters;* International Association of Fire Fighters, Washington, DC.

20. *Occupational Exposures to Carbon Monoxide in Baltimore Firefighters;* Radford and Levine. Johns Hopkins University, Baltimore, MD. Journal of Occupational Medicine, September, 1976.

21. *Fire Brigades;* National Safety Council, Chicago, IL. 1966.

22. *American National Standard, Practice for Respiratory Protection for the Fire Service;* ANSI Z88.5; American National Standards Institute, New York, NY 10018.

23. *Respirator Studies for the Nuclear Regulatory Commission; October 1, 1977—September 30, 1978. Evaluation and Performance of Open Circuit Breathing Apparatus.* NU REG/CR-1235. Los Alamos Scientific Laboratory; Los Alamos, NM. 87545, January, 1980.

B. § *1910.157. Portable fire extinguishers:*

1. *Standard for Portable Fire Extinguishers,* ANSI/NFPA 10; National Fire Protection Association, 470 Atlantic Avenue, Boston, MA 02210.

2. *Methods for Hydrostatic Testing of Compressed Gas Cylinders,* C-1; Compressed Gas Association, 500 Fifth Avenue, New York, NY 10036.

3. *Recommendations for the Disposition of Unserviceable Compressed Gas Cylinders,* C-2; Compressed Gas Association, 500 Fifth Avenue, New York, NY 10036.

4. *Standard for Visual Inspection of Compressed Gas Cylinders,* C-6; Compressed Gas Association, 500 Fifth Avenue, New York, NY 10036.

5. *Portable Fire Extinguisher Selection Guide,* National Association of Fire Equipment Distributors; 111 East Wacker Drive, Chicago, IL 60601.

C. § *1910.158. Standpipe and hose systems:*

1. *Standard for the Installation of Sprinkler Systems,* ANSI/NFPA 13; National Fire Protection Association, 470 Atlantic Avenue, Boston, MA 02210.

2. *Standard of the Installation of Standpipe and Hose Systems,* ANSI/NFPA 14; National Fire Protection Association, 470 Atlantic Avenue, Boston, MA 02210.

3. *Standard for the Installation of Centrifugal Fire Pumps,* ANSI/NFPA 20; National Fire Protection Association, 470 Atlantic Avenue, Boston, MA 02210.

4. *Standard for Water Tanks for Private Fire Protection,* ANSI/NFPA 22; National Fire Protection Association, 470 Atlantic Avenue, Boston, MA 02210.

5. *Standard for Screw Threads and Gaskets for Fire Hose Connections,* ANSI/NFPA 194; National Fire Protection Association, 470 Atlantic Avenue, Boston, MA 02210.

6. *Standard for Fire Hose,* NFPA 196; National Fire Protection Association, 470 Atlantic Avenue, Boston, MA 02210.

7. *Standard for the Care of Fire Hose,* NFPA 198; National Fire Protection Association, 470 Atlantic Avenue, Boston, MA 02210.

D. § *1910.159. Automatic sprinkler systems:*

1. *Standard of the Installation of Sprinkler Systems,* ANSI-NFPA 13; National Fire Protection Association, 470 Atlantic Avenue, Boston, MA 02210.

2. *Standard for the Care and Maintenance of Sprinkler Systems,* ANSI/NFPA 13A; National Fire Protection Association, 470 Atlantic Avenue, Boston, MA 02210.

3. *Standard for the Installation of Standpipe and Hose Systems,* ANSI/NFPA 14; National Fire Protection Association, 470 Atlantic Avenue, Boston, MA 02210.

4. *Standard for the Installation of Centrifugal Fire Pumps,* ANSI/NFPA 20; National Fire Protection Association, 470 Atlantic Avenue, Boston, MA 02210.

5. *Standard for Water Tanks for Private Fire Protection,* ANSI-NFPA 22; National Fire Protection Association, 470 Atlantic Avenue, Boston, MA 02210.

6. *Standard for Indoor General Storage,* ANSI/NFPA 231; National Fire Protection Association, 470 Atlantic Avenue, Boston, MA 02210.

7. *Standard for Rack Storage of Materials,* ANSI/NFPA 231C; National Fire Protection Association, 470 Atlantic Avenue, Boston, MA 02210.

E. § *1910.160. Fixed extinguishing systems—general information:*

1. *Standard for Foam Extinguishing Systems,* ANSI-NFPA 11; National Fire Protection Association, 470 Atlantic Avenue, Boston, MA 02210.

2. *Standard for Hi-Expansion Foam Systems,* ANSI/NFPA 11A; National Fire Protection Association, 470 Atlantic Avenue, Boston, MA 02210.

3. *Standard on Synthetic Foam and Combined Agent Systems,* ANSI/NFPA 11B; National Fire Protection Association, 470 Atlantic Avenue, Boston, MA 02210.

4. *Standard on Carbon Dioxide Extinguishing Systems,* ANSI/NFPA 12; National Fire Protection Association, 470 Atlantic Avenue, Boston, MA 02210.

5. *Standard on Halon 1301,* ANSI/NFPA 12A; National Fire Protection Association, 470 Atlantic Avenue, Boston, MA 02210.

6. *Standard on Halon 1211,* ANSI/NFPA 12B; National Fire Protection Association, 470 Atlantic Avenue, Boston, MA 02210.

7. *Standard for Water Spray Systems,* ANSI/NFPA 15; National Fire Protection Association, 470 Atlantic Avenue, Boston, MA 02210.

8. *Standard for Foam-Water Sprinkler Systems and Foam-Water Spray Systems,* ANSI/NFPA 16; National Fire Protection Association, 470 Atlantic Avenue, Boston, MA 02210.

9. *Standard for Dry Chemical Extinguishing Systems,* ANSI/NFPA 17; National Fire Protection Association, 470 Atlantic Avenue, Boston, MA 02210.

F. § *1910.161. Fixed extinguishing systems—dry chemical:*

1. *Standard for Dry Chemical Extinguishing Systems,* ANSI/NFPA 17; National Fire Protection Association, 470 Atlantic Avenue, Boston, MA 02210.

2. *National Electrical Code,* ANSI/NFPA 70; National Fire Protection Association, 470 Atlantic Avenue, Boston, MA 02210.

3. *Standard for the Installation of Equipment for the Removal of Smoke and Grease-Laden Vapor from Commercial Cooking Equipment,* NFPA 96; National Fire Protection Association, 470 Atlantic Avenue, Boston, MA 02210.

G. § *1910.162. Fixed extinguishing systems—gaseous agents:*

1. *Standard on Carbon Dioxide Extinguishing Systems,* ANSI/NFPA 12; National Fire Protection Association, 470 Atlantic Avenue, Boston, MA 02210.

2. *Standard on Halon 1301,* ANSI/NFPA 12B; National Fire Protection Association, 470 Atlantic Avenue, Boston, MA 02210.

3. *Standard on Halon 1211,* ANSI/NFPA 12B; National Fire Protection Association, 470 Atlantic Avenue, Boston, MA 02210.

4. *Standard on Explosion Prevention Systems,* ANSI/NFPA 69; National Fire Protection Association, 470 Atlantic Avenue, Boston, MA 02210.

5. *National Electrical Code,* ANSI/NFPA 70; National Fire Protection Association, 470 Atlantic Avenue, Boston, MA 02210.

6. *Standard on Automatic Fire Detectors,* ANSI/NFPA 72E; National Fire Protection Association, 470 Atlantic Avenue, Boston, MA 02210.

7. *Determination of Halon 1301/1211 Threshold Extinguishing Concentrations Using the Cup Burner Method;* Riley and Olson, Ansul Report AL-530-A.

H. § *1910.163. Fixed extinguishing systems—water spray and foam agents:*

1. *Standard for Foam Extinguisher Systems,* ANSI/NFPA 11; National Fire Protection Association, 470 Atlantic Avenue, Boston, MA 02210.

2. *Standard for High Expansion Foam Systems,* ANSI/NFPA 11A; National Fire Protection Association, 470 Atlantic Avenue, Boston, MA 02210.

3. *Standard for Water Spray Fixed Systems for Fire Protection,* ANSI/NFPA 15; National Fire Protection Association, 470 Atlantic Avenue, Boston, MA 02210.

4. *Standard for the Installation of Foam-Water Sprinkler Systems and Foam-Water Spray Systems,* ANSI/NFPA 16; National Fire Protection Association, 470 Atlantic Avenue, Boston, MA 02210.

I. § *1910.164. Fire Detection systems:*

1. *National Electrical Code,* ANSI/NFPA 70; National Fire Protection Association, 470 Atlantic Avenue, Boston, MA 02210.

2. *Standard for Central Station Signaling Systems,* ANSI/NFPA 71; National Fire Protection Association, 470 Atlantic Avenue, Boston, MA 02210.

3. *Standard on Automatic Fire Detectors,* ANSI/NFPA 72E; National Fire Protection Association, 470 Atlantic Avenue, Boston, MA 02210.

J. § *1910.165. Employee alarm systems:*

1. *National Electrical Code,* ANSI/NFPA 70; National Fire Protection Association, 470 Atlantic Avenue, Boston, MA 02210.

2. *Standard for Central Station Signaling systems,* ANSI/NFPA 71; National Fire Protection Association, 470 Atlantic Avenue, Boston, MA 02210.

3. *Standard for Local Protective Signaling Systems,* ANSI/NFPA 72A; National Fire Protection Association, 470 Atlantic Avenue, Boston, MA 02210.

4. *Standard for Auxiliary Protective Signaling Systems,* ANSI/NFPA 72B; National Fire Protection Association, 470 Atlantic Avenue, Boston, MA 02210.

5. *Standard for Remote Station Protective Signaling Systems,* ANSI/NFPA 72C; National Fire Protection Association, 470 Atlantic Avenue, Boston, MA 02210.

6. *Standard for Proprietary Protective Signaling Systems,* ANSI/NFPA 72D; National Fire Protection Association, 470 Atlantic Avenue, Boston, MA 02210.

7. *Vocal Emergency Alarms in Hospitals and Nursing Facilities: Practice and Potential.* National Bureau of Standards. Washington, D.C., July 1977.

8. *Fire Alarm and Communication Systems.* National Bureau of Standards. Washington, D.C., April 1978.

Appendix D to Supbart L.—Availability of Publications Incorporated by Reference in Section 1910.156 Fire Brigades

The final standard for fire brigades, Section 1910.156, contains provisions which incorporate certain publications by reference. The publications provide criteria and test methods for protective clothing worn by those fire brigade members who are expected to perform interior structural fire fighting. The standard references the publications as the chief sources of information for determining if the protective clothing affords the required level of protection.

It is appropriate to note that the final standard does not require employers to purchase a copy of the referenced publications. Instead, employers can specify (in purchase orders to the manufacturers) that the protective clothing meet the criteria and test methods contained in the referenced publications and can rely on the manufacturers' assurances of compliance. Employers, however, may desire to obtain a copy of the referenced publications for their own information.

The paragraph designation of the standard where the referenced publications appear, the title of the publications, and the availablity of the publications are as follows:

Paragraph designation	Referenced Publication	Available From
1910.156(e)(3)(ii)	"Protective Clothing for Structural Fire Fighting," NFPA No. 1971 (1975).	National Fire Protection Association, 470 Atlantic Ave., Boston, MA. 02210.
1910.156(e)(4)(i)	"Development of Criteria for Fire Fighter's Gloves; Vol. II, Part II: Test Methods" (1976).	U.S. Government Printing Office, Washington, D.C. 20402. Stock No. for Vol. II is: 071-033-0201-1.
1910.156(e)(5)(i)	"Model Performance Criteria for Structural Firefighter's Helmets" (1977).	U.S. Fire Administration, National Fire Safety and Research Office, Washington, D.C. 20230.

The referenced publications (or a microfiche of the publications) are available for review at many universities and public libraries throughout the country. These publications may also be examined at the OSHA Technical Data Center, Room N2439-Rear, United States Department of Labor, 200 Constitution Ave., N.W., Washington, D.C. 20210 (202-523-9700), or at any OSHA Regional Office (see telephone directories under United States Government-Labor Department).

Appendix E To Subpart L.—Test Methods for Protective Clothing

This appendix contains test methods which must be used to determine if protective clothing affords the required level of protection as specified in § 1910.156, fire brigades.

(1) *Puncture resistance test method for foot protection.*

A. *Apparatus.* The puncture resistance test shall be performed on a testing machine having a movable platform adjusted to travel at ¼-inch per minute. Two blocks of hardwood, metal, or plastic shall be prepared as follows: the blocks shall be of such size and thickness as to insure a suitable rigid test ensemble and allow for at least one-inch of the pointed end of an 8D nail to be exposed for the penetration. One block shall have a hole drilled to hold an 8D common nail firmly at an angle of 98°. The second block shall have a maximum ½-inch diameter hole drilled through it so that the hole will allow free passage of the nail after it penetrates the insole during the test.

B. *Procedure.* The test ensemble consisting of the sample unit, the two prepared blocks, a piece of leather outsole 10 to 11 irons thick, and a new 8D nail, shall be placed as follows: the 8D nail in the hole, the sample of outsole stock superimposed above the nail, the area of the sole plate to be tested placed on the outsole, and the second block with hole so placed as to allow for free passage of the nail after it passes through the outsole stock and sole plate in that order. The machine shall be started and the pressure, in pounds required for the nail to completely penetrate the outsole and sole plate, recorded to the nearest five pounds. Two determinations shall be made on each sole plate and the results averaged. A new nail shall be used for each determination.

C. *Source.* These test requirements are contained in "Military Specification For Fireman's Boots," MIL-B-2885D (1973 and amendment dated 1975) and are reproduced for your convenience.

(2) *Test method for determining the strength of cloth by tearing: Trapezoid Method.*

A. *Test specimen.* The specimen shall be a rectangle of cloth 3-inches by 6-inches. The long dimension shall be parallel to the warp for warp tests and parallel to the filling for filling tests. No two specimens for warp tests shall contain the same warp yarns, nor shall any two specimens for filling tests contain the same filling yarns. The specimen shall be taken no nearer the selvage than 1/10 the width of the cloth. An isosceles trapezoid having an altitude of 3-inches and bases of 1 and 4 inches in length, respectively, shall be marked on each specimen, preferably with the aid of a template. A cut approximately ⅜-inch in length shall then be made in the center of a perpendicular to the 1-inch edge.

B. *Apparatus.* (i) Six-ounce weight tension clamps shall be used so designed that the six ounces of weight are distributed evenly across the complete width of the sample.

(ii) The machine shall consist of three main parts: Straining mechanism, clamps for holding specimen, and load and elongation recording mechanisms.

(iii) A machine wherein the specimen is held between two clamps and strained by a uniform movement of the pulling clamp shall be used.

(iv) The machine shall be adjusted so that the pulling clamp shall have a uniform speed of 12 ± 10.5 inches per minute.

(v) The machine shall have two clamps with two jaws on each clamp. The design of the two clamps shall be such that one gripping surface or jaw may be an integral part of the rigid frame of the clamp or be fastened to allow a slight vertical movement, while the other gripping surface or jaw shall be completely moveable. The dimension of the immovable jaw of each clamp parallel to the application of the load shall measure one-inch, and the dimension of the jaw perpendicular to this direction shall measure three inches or more. The face of the movable jaw of each clamp shall measure one-inch by three inches.

Each jaw face shall have a flat smooth, gripping surface. All edges which might cause a cutting action shall be rounded to a radius of not over 1/64-inch. In cases where a cloth tends to slip when being tested, the jaws may be faced with rubber or other material to prevent slippage. The distance between the jaws (gage length) shall be one-inch at the start of the test.

(vi) Calibrated dial; scale or chart shall be used to indicate applied load and elongation. The machine shall be adjusted or set, so that the maximum load required to break the specimen will remain indicated on the calibrated dial or scale after the test specimen has ruptured.

(vii) The machine shall be of such capacity that the maximum load required to break the specimen shall be not greater than 85 percent or less than 15 percent of the rated capacity.

(viii) The error of the machine shall not exceed 2 percent up to and including a 50-pound load and 1 percent over a 50-pound load at any reading within its loading range.

(ix) All machine attachments for determining maximum loads shall be disengaged during this test.

C. *Procedure.* (i) The specimen shall be clamped in the machine along the nonparallel sides of the trapezoid so that these sides lie along the lower edge of the upper clamp and the upper edge of the lower clamp with the cut halfway between the clamps. The short trapezoid base shall be held taut and the long trapezoid base shall lie in the folds.

(ii) The machine shall be started and the force necessary to tear the cloth shall be observed by means of an autographic recording device. The speed of the pulling clamp shall be 12 inches ±0.5 inch per minute.

(iii) If a specimen slips between the jaws, breaks in or at the edges of the jaws, or if for any reason attributable to faulty technique, an individual measurement falls markedly below the average test results for the sample unit, such result shall be discarded and another specimen shall be tested.

(iv) The tearing strength of the specimen shall be the average of the five highest peak loads of resistance registered for 3 inches of separation of the tear.

D. *Report.* (i) Five specimens in each of the warp and filling directions shall be tested from each sample unit.

(ii) The tearing strength of the sample unit shall be the average of the results obtained from the specimens tested in each of the warp and filling directions and shall be reported separately to the nearest 0.1-pound.

E. *Source.* These test requirements are contained in "Federal Test Method Standard 191, Method 5136" and are reproduced for your convenience.

(3) *Test method for determining flame resistance of cloth; vertical.*

A. *Test specimen.* The specimen shall be a rectangle of cloth 2¾ inches (7.0 cm) by 12 inches (30.5 cm) with the long dimension

parallel to either the warp or filling direction of the cloth. No two warp specimens shall contain the same warp yarns, and no two filling specimens shall contain the same filling yarn.

B. *Number of determinations.* Five specimens from each of the warp and filling directions shall be tested from each sample unit.

C. *Apparatus.* (i) Cabinet. A cabinet and accessories shall be fabricated in accordance with the requirements specified in Figures L-1, L-2, and L-3. Galvanized sheet metal or other suitable metal shall be used. The entire inside back wall of the cabinet shall be painted black to facilitate the viewing of the test specimen and pilot flame.

(ii) Burner. The burner shall be equipped with a variable orifice to adjust the flame height, a barrel having a ⅜-inch (9.5 mm) inside diameter and a pilot light.

(a) The burner may be constructed by combining a ⅜-inch (9.5 mm) inside diameter barrel 3 ± ¼ inches (76.2 ± 6.4 mm) long from a fixed orifice burner with a base from a variable orifice burner.

(b) The pilot light tube shall have a diameter of approximately 1/16-inch (1.6 mm) and shall be spaced ⅛-inch (3.2 mm) away from the burner edge with a pilot flame ⅛-inch (3.2 mm) long.

(c) The necessary gas connections and the applicable plumbing shall be as specified in Figure L-4 except that a solenoid valve may be used in lieu of the stopcock valve to which the burner is attached. The stopcock valve or solenoid valve, whichever is used, shall be capable of being fully opened or fully closed in 0.1-second.

(d) On the side of the barrel of the burner, opposite the pilot light there shall be a metal rod of approximately ⅛-inch (3.2 mm) diameter spaced ½-inch (12.7 mm) from the barrel and extending above the burner. The rod shall have two 5/16-inch (7.9 mm) prongs marking the distances of ¾-inch (19 mm) and 1½ inches (38.1 mm) above the top of the burner.

(e) The burner shall be fixed in a position so that the center of the barrel of the burner is directly below the center of the specimen.

(iii) There shall be a control valve system with a delivery rate designed to furnish gas to the burner under a pressure of 2½ ± ¼ pounds (1.1-kg ± 0.1 kg) per square inch at the burner inlet (see (g)(3)(vi)(A)). The manufacturer's recommended delivery rate for the valve system shall be included in the required pressure.

(iv) A synthetic gas mixture shall be of the following composition within the following limits (analyzed at standard conditions): 55 ± 3 percent hydrogen, 24 ± 1 percent methane, 3 ± 1 percent ethane, and 18 ± 1 percent carbon monoxide which will give a specific gravity of 0.365 ± 0.018 (air = 1) and a B.T.U. content of 540 ± 20 per cubic foot (dry basis) at 69.8°F (21°C).

(v) There shall be metal hooks and weights to produce a series of total loads to determine length of char. The metal hooks shall consist of No. 19 gage steel wire or equivalent and shall be made from 3-inch (76.2 mm) lengths of wire and bent ½-inch (12.7 mm) from one end to a 45 degree hook. One end of the hook shall be fastened around the neck of the weight to be used.

(vi) There shall be a stop watch or other device to measure the burning time to 0.2-second.

(vii) There shall be a scale, graduated in 0.1-inch (mm) to measure the length of char.

D. *Procedure.* (i) The material undergoing test shall be evaluated for the characteristics of after-flame time and char length on each specimen.

(ii) All specimens to be tested shall be at moisture equilibrium under standard atmospheric conditions in accordance with paragraph (3)C of this appendix. Each specimen to be tested shall be exposed to the test flame within 20 seconds after removal from the standard atmosphere. In case of dispute, all testing will be conducted under Standard Atmospheric Conditions in accordance with paragraph (3)C of this appendix.

(iii) The specimen in its holder shall be suspended vertically in the cabinet in such a manner that the entire length of the specimen is exposed and the lower end is ¾-inch (19 mm) above the top of the gas burner. The apparatus shall be set up in a draft free area.

(iv) Prior to inserting the specimen, the pilot flame shall be adjusted to approximately ⅛-inch (3.2 mm) in height measured from its lowest point to the tip.

The burner flame shall be adjusted by means of the needle valve in the base of the burner to give a flame height of 1½ inches (38.1 mm) with the stopcock fully open and the air supply to the burner shut off and taped. The 1½-inch (38.1 mm) flame height is obtained by adjusting the valve so that the uppermost portion (tip) of the flame is level with the tip of the metal prong (see Figure L-2) specified for adjustment of flame height. It is an important aspect of the evaluation that the flame height be adjusted with the tip of the flame level with the tip of the metal prong. After inserting the specimen, the stopcock shall be fully opened, and the burner flame applied vertically at the middle of the lower edge of the specimen for 12 seconds and the burner turned off. The cabinet door shall remain shut during testing.

(v) The after-flame shall be the time the specimen continues to flame after the burner flame is shut off.

(vi) After each specimen is removed, the test cabinet shall be cleared of fumes and smoke prior to testing the next specimen.

(vii) After both flaming and glowing have ceased, the char length shall be measured. The char length shall be the distance from the end of the specimen, which was exposed to the flame, to the end of a tear (made lengthwise) of the specimen through the center of the charred area as follows: The specimen shall be folded lengthwise and creased by hand along a line through the highest peak of the charred area. The hook shall be inserted in the specimen (or a hole, ¼-inch (6.4 mm) diameter or less, punched out for the hook) at one side of the charred area ¼-inch (6.4 mm) from the adjacent outside edge and ¼-inch (6.4 mm) in from the lower end. A weight of sufficient size such that the weight and hook together shall equal the total tearing load required in Table L-2 of this section shall be attached to the hook.

(viii) A tearing force shall be applied gently to the specimen by grasping the corner of the cloth at the opposite edge of the char from the load and raising the specimen and weight clear of the supporting surface. The end of the tear shall be marked off on the edge and the char length measurement made along the undamaged edge.

Loads for determining char length applicable to the weight of the test cloth shall be as shown in Table L-2.

Table L-2

Specified weight per square yard of cloth before any fire retardant treatment or coating—ounces	Total tearing weight for determining the charred length—pound
2.0 to 6.0	0.25
Over 6.0 to 15.0	0.50
Over 15.0 to 23.0	0.75
Over 23.0	1.0

(ix) The after-flame time of the specimen shall be recorded to the nearest 0.2-second and the char length to the nearest 0.1-inch (1 mm).

E. *Report.* (i) The after-flame time and char length of the sample unit shall be the average of the results obtained from the individual specimens tested. All values obtained from the individual specimens shall be recorded.

(ii) The after-flame time shall be reported to the nearest 0.2-second and the char length to the nearest 0.1-inch (1 mm).

F. *Source.* These test requirements are contained in "Federal Test Method Standard 191, Method 5903 (1971)" and are reproduced for your convenience.

(Sec. 4, 6, 8, 84 Stat. 1592, 1593, 1599 (29 U.S.C. 653, 655, 657); Secretary of Labor's Order No. 8-76 (41 FR 25059); 29 CFR Part 1911)

BILLING CODE 4510-26-M

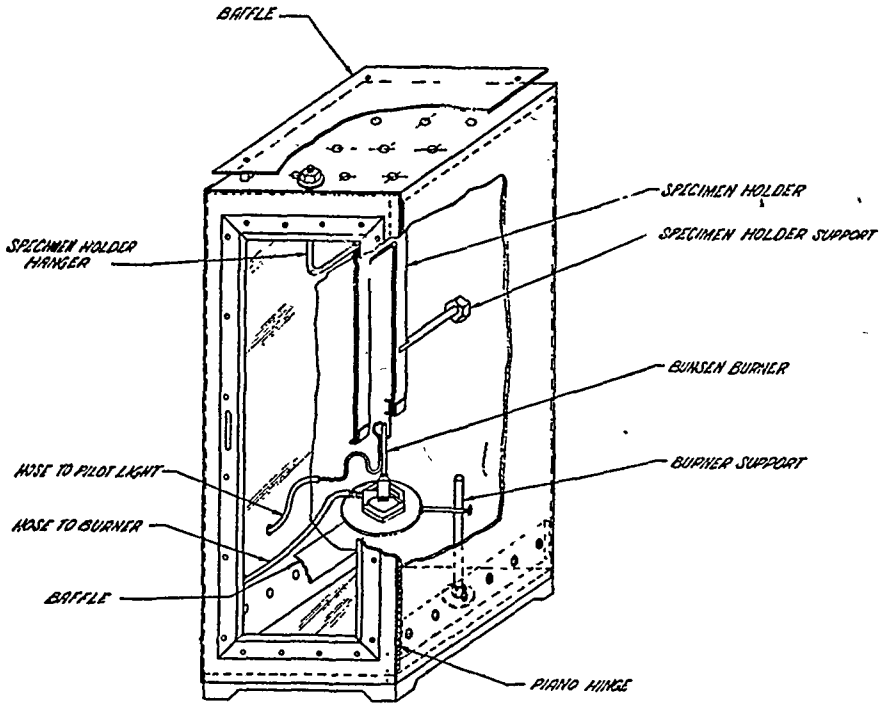

ILLUSTRATION

FIGURE L-1 - Verticle flame resistance textile apparatus.

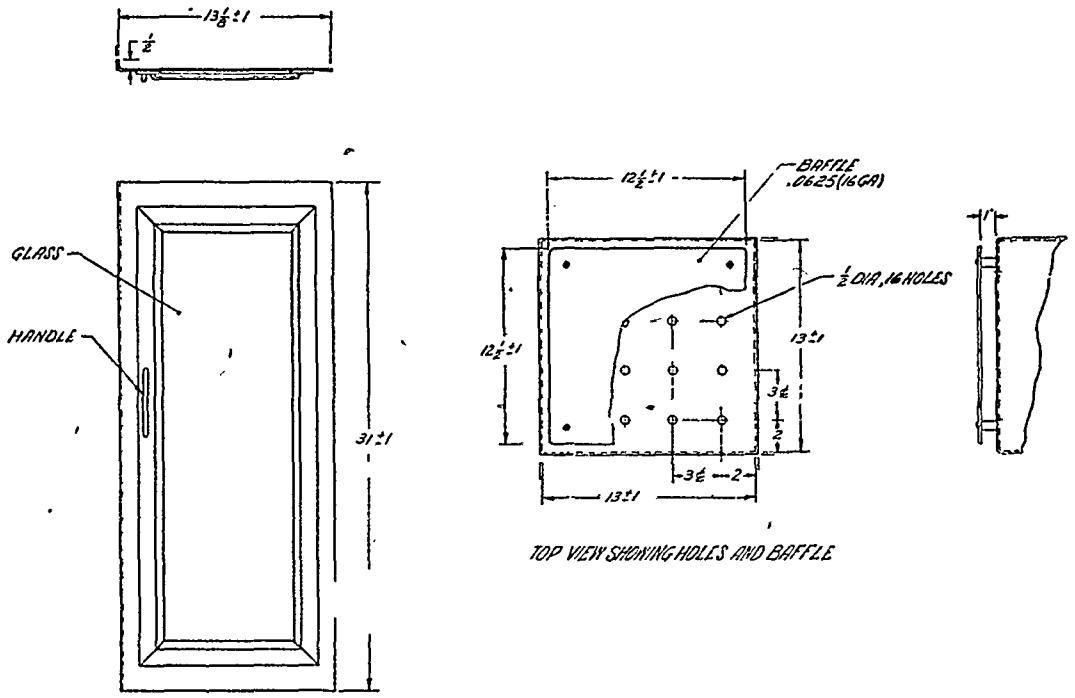

TOP VIEW SHOWING HOLES AND BAFFLE

DOOR

FIGURE L-2 - Vertical flame resistance textile apparatus, door and top view w/baffle.

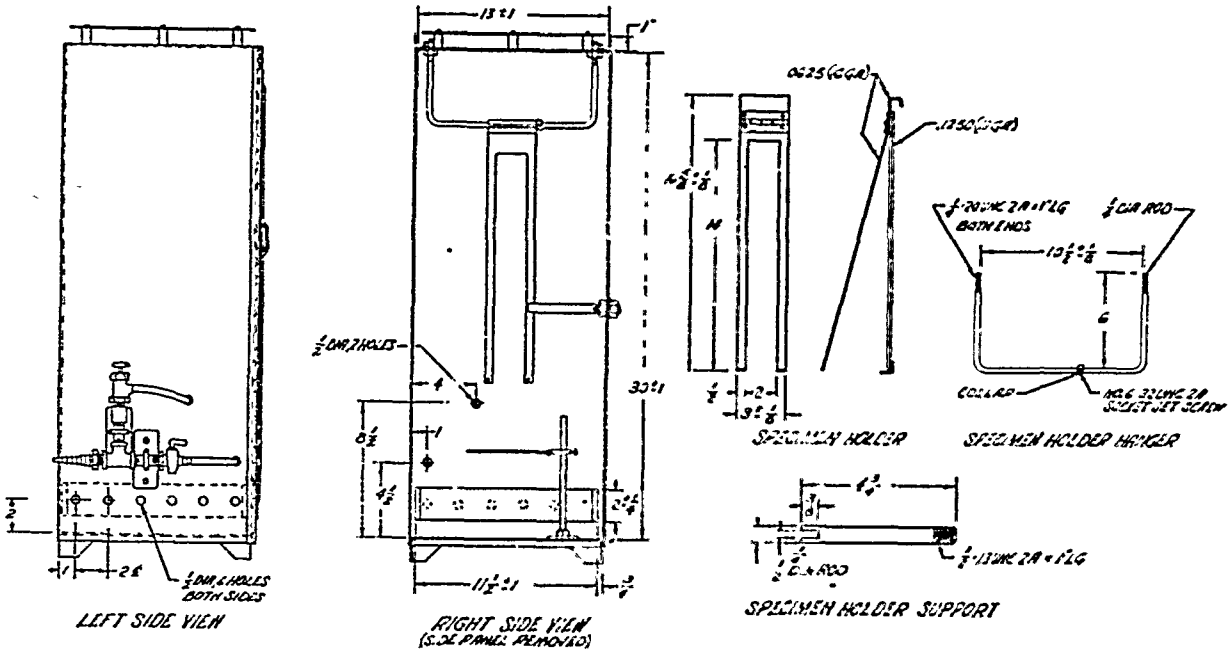

FIGURE L-3 - Verticle flame resistance textile apparatus, views and details.

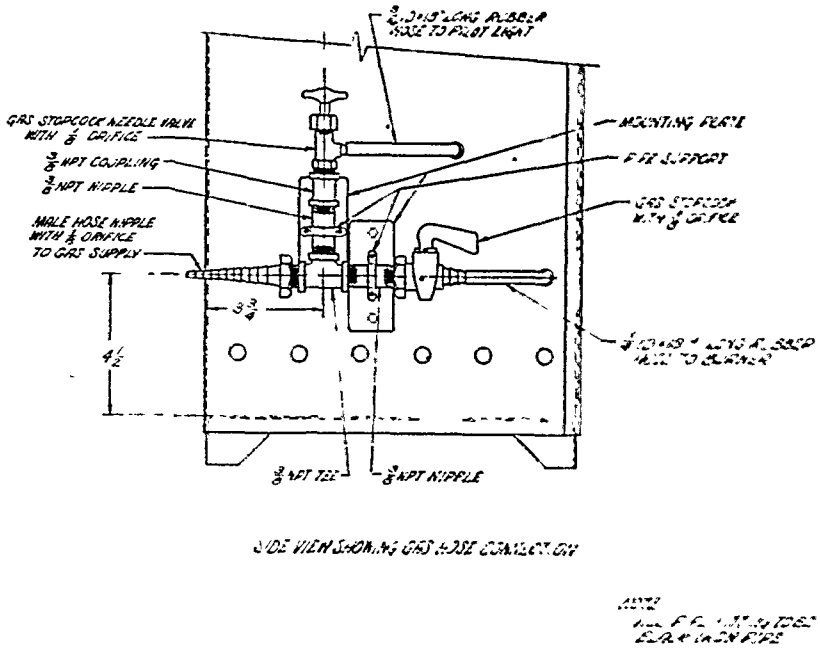

FIGURE L-4 - Vertical flame resistance textile apparatus.

[FR Doc. 80-27781 Filed 9-11-80, 8:45 am]
BILLING CODE 4510-26-C

Federal Register

Friday
September 12, 1980

Part IV

Department of Labor

Employment Standards Administration

Minimum Wages for Federal and Federally Assisted Construction; General Wage Determination Decisions

DEPARTMENT OF LABOR

Employment Standards Administration, Wage and Hour Division

Minimum Wages for Federal and Federally Assisted Construction; General Wage Determination Decisions

General wage determination decisions of the Secretary of Labor specify, in accordance with applicable law and on the basis of information available to the Department of Labor from its study of local wage conditions and from other sources, the basic hourly wage rates and fringe benefit payments which are determined to be prevailing for the described classes of laborers and mechanics employed on construction projects of the character and in the localities specified therein.

The determinations in these decisions of such prevailing rates and fringe benefits have been made by authority of the Secretary of Labor pursuant to the provisions of the Davis-Bacon Act of March 3, 1931, as amended (46 Stat. 1494, as amended, 40 U.S.C. 276a) and of other Federal statutes referred to in 29 CFR 1.1 (including the statutes listed at 36 FR 306 following Secretary of Labor's order No. 24–70) containing provisions of the payment of wages which are dependent upon determination by the Secretary of Labor under the Davis-Bacon Act; and pursuant to the provisions of part 1 of subtitle A of title 29 of Code of Federal Regulations, Procedure for Predetermination of Wage Rates (37 FR 21138) and of Secretary of Labor's Orders 12–71 and 15–71 (36 FR 8755, 8756). The prevailing rates and fringe benefits determined in these decisions shall, in accordance with the provisions of the foregoing statutes, constitute the minimum wages payable on Federal and federally assisted construction projects to laborers and mechanics of the specified classes engaged on contract work of the character and in the localities described therein.

Good cause is hereby found for not utilizing notice and public procedure thereon prior to the issuance of these determinations as prescribed in 5 U.S.C. 553 and not providing for delay in effective date as prescribed in that section, because the necessity to issue construction industry wage determination frequently and in large volume causes procedures to be impractical and contrary to the public interest.

General wage determination decisions are effective from their date of publication in the Federal Register without limitation as to time and are to be used in accordance with the provisions of 29 CFR Parts 1 and 5. Accordingly, the applicable decision together with any modifications issued subsequent to its publication date shall be made a part of every contract for performance of the described work within the geographic area indicated as required by an applicable Federal prevailing wage law and 29 CFR, Part 5. The wage rates contained therein shall be the minimum paid under such contract by contractors and subcontractors on the work.

Modifications and Supersedeas Decisions to General Wage Determination Decisions

Modifications and supersedeas decisions to general wage determination decisions are based upon information obtained concerning changes in prevailing hourly wage rates and fringe benefit payments since the decisions were issued.

The determinations of prevailing rates and fringe benefits made in the modifications and supersedeas decisions have been made by authority of the Secretary of Labor pursuant to the provisions of the Davis-Bacon Act of March 3, 1931, as amended (46 Stat. 1494, as amended, 40 U.S.C. 276a) and of other Federal statutes referred to in 29 CFR 1.1 (including the statutes listed at 36 FR 306 following Secretary of Labor's Order No. 24–70) containing provisions for the payment of wages which are dependent upon determination by the Secretary of Labor under the Davis-Bacon Act; and pursuant to the provisions of part 1 of subtitle A of title 29 of Code of Federal Regulations, Procedure for Predetermination of Wage Rates (37 FR 21138) and of Secretary of Labor's Orders 13–71 and 15–71 (36 FR 8755, 8756). The prevailing rates and fringe benefits determined in foregoing general wage determination decisions, as hereby modified, and/or superseded shall, in accordance with the provisions of the foregoing statutes, constitute the minimum wages payable on Federal and federally assisted construction projects to laborers and mechanics of the specified classes engaged in contract work of the character and in the localities described therein.

Modifications and supersedeas decisions are effective from their date of publication in the Federal Register without limitation as to time and are to be used in accordance with the provisions of 29 CFR Parts 1 and 5.

Any person, organization, or governmental agency having an interest in the wages determined as prevailing is encouraged to submit wage rate information for consideration by the Department. Further information and self-explanatory forms for the purpose of submitting this data may be obtained by writing to the U.S. Department of Labor, Employment Standards Administration, Wage and Hour Division, Office of Government Contract Wage Standards, Division of Government Contract Wage Determination, Washington, D.C. 20210. The cause for not utilizing the rulemaking procedures prescribed in 5 U.S.C. 553 has been set forth in the original General Determination Decision.

New General Wage Determination Decisions

None.

Modifications To General Wage Determination Decisions

The numbers of the decisions being modified and their dates of publication in the Federal Register are listed with each State.

Alabama: AL78-1080	Sept. 22, 1978.
California:	
CA78-5122	May 23, 1978.
CA80-5117	May 23, 1980.
Connecticut:	
CT80-2073	Aug. 15, 1980.
CT80-2074	Aug. 15, 1980.
Illinois: IL79-2053	Aug. 24, 1979.
Michigan: MI80-2042	July 18, 1980.
Mississippi: MS80-1084	July 25, 1980.
Pennsylvania:	
PA78-3078	Oct. 20, 1978.
PA79-3007	Apr. 6, 1979.
PA80-3011	Feb. 22, 1980.
Vermont: VT80-2076	Sept. 5, 1980.

Supersedeas Decisions To General Wage Determination Decisions

The numbers of the decisions being superseded and their dates of publication in the Federal Register are listed with each State. Supersedeas decision numbers are in parentheses following the numbers of the decisions being superseded.

Massachusetts:
MA79-2085 (MA80-2041) ..... Dec. 21, 1979.
MA79-2008 (MA80-2041 ..... Mar. 16, 1979.
MA78-2079 (MA80-2041) ..... Sept. 22, 1978.
MA78-2081 (MA80-2041) ..... Sept. 22, 1978.
MA78-2087 (MA80-2041) ..... Sept. 22, 1978.
MA78-2088 (MA80-2041) ..... Sept. 22, 1978.
MA80-2001 (MA80-2041) ..... Mar. 7, 1980.
Pennsylvania: PA80-3034 (PA80-3056 ..... Apr. 18, 1980.
Wisconsin: WI78-2134 (WI80-2078) ..... Oct. 27, 1978.

Cancellation of General wage Determination Decisions

None.

Signed at Washington, D.C. This 5th Day of September 1980.

Dorothy P. Come,

Assistant Administrator Wage and Hour Division.

BILLING CODE 4510-27-M

Modification Page 1

DECISION #AL78-1080 - Mod. #5
(43 FR 43152 - September 22, 1978)
Calhoun County, Alabama

CHANGE:

	Basic Hourly Rates	Fringe Benefits Payments			
		H & W	Pensions	Vacation	Education and/or Appr Tr
Electricians	$13.05	.55	3%+.40		½ of 1%

Modification page 2

DECISION NO. CA 78-5122 - Mod. #11
(43 FR 35835 - May 23, 1978)
Imperial, Kern, Los Angeles, Orange, Riverside, San Bernardino, San Luis Obispo, Santa Barbara and Ventura Counties, California

Change:

	Basic Hourly Rates	Fringe Benefits Payments			
		H & W	Pensions	Vacation	Education and/or Appr. Tr.
POWER EQUIPMENT OPERATORS:					
GROUP 1	$13.60	1.10	2.65	.90	.14
GROUP 2	13.88	1.10	2.65	.90	.14
GROUP 3	14.17	1.10	2.65	.90	.14
GROUP 4	14.31	1.10	2.65	.90	.14
GROUP 5	14.53	1.10	2.65	.90	.14
GROUP 6	14.64	1.10	2.65	.90	.14
GROUP 7	14.76	1.10	2.65	.90	.14
GROUP 8	14.93	1.10	2.65	.90	.14
GROUP 9	15.06	1.10	2.65	.90	.14

Modification Page 3

DECISION NO. CA80-5117 - Mod. #7
(45 FR 35110 - May 23, 1980)
Imperial, Kern, Los Angeles, Orange, Riverside, San Bernardino, San Luis Obispo, Santa Barbara and Ventura Counties, California

Change:

	Basic Hourly Rates	Fringe Benefits Payments			
		H & W	Pensions	Vacation	Education and/or Appr. Tr.
POWER EQUIPMENT OPERATORS:					
GROUP 1	$13.60	1.10	2.65	.90	.14
GROUP 2	13.88	1.10	2.65	.90	.14
GROUP 3	14.17	1.10	2.65	.90	.14
GROUP 4	14.31	1.10	2.65	.90	.14
GROUP 5	14.53	1.10	2.65	.90	.14
GROUP 6	14.64	1.10	2.65	.90	.14
GROUP 7	14.76	1.10	2.65	.90	.14
GROUP 8	14.93	1.10	2.65	.90	.14
GROUP 9	15.06	1.10	2.65	.90	.14
PLUMBERS; STEAMFITTERS:					
Area 1	15.25	1.53	2.44	1.98	.11
IRONWORKERS:					
Fence Erectors	13.11	1.39	2.57	2.15	.07
Structural, Ornamental	14.00	1.39	2.57	2.15	.07
Rainforcing	14.00	1.39	2.57	2.15	.07

Modification Page 4

DECISION NO. CT80-2073, MOD. #2
(45 FR 54594 Aug. 15, 1980)
Fairfield, Litchfield & Windham Cos., Connecticut

CHANGE:

	Basic Hourly Rates	Fringe Benefits Payments			
		H & W	Pensions	Vacation	Education and/or Appr. Tr.
Bricklayers (heavy & highway Construction)					
All Connecticut except townships of Darien, Greenwich & Stamford	$10.90	.75	.75		
Darien & Stamford	11.32	.83	.25		
Greenwich	10.65	.80	.95		
Litchfield Co.: Bantam, Barkhamsted, Bethlehem, Canaan, Colebrook, Cornwall, Falls Village, Goshen, Harwinton, Kent, Lakeville, Litchfield, Morris, New Hartford, New Norfolk, N. Canaan, Roxbury, Preston, Salisbury, Sharon, Thomastown, Torrington, Warren, Washington, Winchester, Watertown, Winsted & Woodbury.					
CHANGE:					
Plumbers	13.50	.88	.80	t	.05

Modification Page 5

DECISION CT80-2074 MOD. #2
(45FR 54602 Aug. 15, 1980)

Hartford, Middlesex, New Haven, New London, & Tolland Cos., Connecticut	Basic Hourly Rates	Fringe Benefits Payments			
		H & W	Pensions	Vacation	Education and/or Appr. Tr.
CHANGE:					
Bricklayers (heavy & highway construction)	10.90	.75	.75		
New Haven Co.: Ansonia, Beacon Falls, Bethany, Middlebury, Naugatuck, Oxford, Prospect, Seymour, Southbury, S. Britain, Waterbury, & Wolcott					
Hartford Co.: Hartland					
CHANGE:					
Plumbers	13.50	.88	.80	v	.05

Decision No. IL79-2053 - Mod. #2
(44 FR 4883 Aug. 24, 1979)
Madison & St. Clair Counties, Illinois

Change:					
Painters:					
Residential & Commercial: Residential & Commercial	$12.76	.65	.35		

Modification Page 6

DECISION #MI80-2042 - MOD. #1
(45 FR 48417 July 18, 1980)
Statewide, Michigan

	Basic Hourly Rates	Fringe Benefits Payments			
		H & W	Pensions	Vacation	Education and/or Appr. Tr.
CHANGE:					
Carpenters:					
Zone 2E	$12.68	.75	.90		.05
Zone 2W	12.55	.75	.90		.05
Zone 3LP	12.44	.75	.90		.05
Zone 3UP	12.39	.75	.90		.05
Power Equipment Operators:					
Underground Construction					
Zone 1					
Class I	11.91	.95	1.50	11%	.05
Class II	11.79	.95	1.50	11%	.05
Class III	11.14	.95	1.50	11%	.05
Class IV	10.62	.95	1.50	11%	.05
Zone 2					
Class I	10.37	.95	1.50	11%	.05
Class II	10.11	.95	1.50	11%	.05
Class III	9.66	.95	1.50	11%	.05
Class IV	9.41	.95	1.50	11%	.05
ADD:					
Power Equipment Operators:					
Highway Construction					
Zones 1&2					
Class 1					
Swinging Boom Truck (over 12 ton capacity); Roto-Mill					

Modification Page 7

DECISION No. MS80-1084-Mod. #3
(45 FR 49815 - July 25, 1980)
Hinds County, Mississippi

	Basic Hourly Rates	Fringe Benefits Payments			
		H & W	Pensions	Vacation	Education and/or Appr. Tr.
CHANGE:					
Power Equipment Operators:					
GROUP I	$11.03	.50	.30		.05
GORUP II	10.19	.50	.30		.05
GROUP III	9.93	.50	.30		.05
GROUP IV	9.30	.50	.30		.05
GROUP V	7.58	.50	.30		.05
Booms including jib:					
$.50 above regular rate - 100 ft. thru 200 ft.					
$1.00 above regular rate - 201 ft. thru 300 ft.					
$2.00 above regular rate - 301 ft. thru 400 ft.					
$3.00 above regular rate - 401 ft. thru 500 ft.					
$3.25 above regular rate - 501 feet and above					

DECISION NO. PA78-2078
MOD. NO. 4
(43 FR 49205 - October 20, 1978)
Allegheny County, Pennsylvania

CHANGE:					
Electricians (Single or two family houses walk-up garden type apartments up to and including 4 stories	$9.15	.55	3%	.40	

Modification Page 8

DECISION NO. PA79-3007
MOD. NO. 8
(44 FR 20932 - April 6, 1979)
Clinton, Centre, Huntingdon, Fulton & Mifflin Counties, Pennsylvania

	Basic Hourly Rates	Fringe Benefits Payments			
		H & W	Pensions	Vacation	Education and/or Appr. Tr.
CHANGE:					
Asbestos Workers					
Zone 2	$12.26	1.12	.90		.01
Boilermakers	15.57	1.275	1.00		.02
Bricklayers & Stonemasons					
Zone I	11.35	.75	1.00		.01
Zone III	10.80	1.05	.75		.015
Zone IV	12.05	.75	1.00		.01
Carpenters & Soft Floor Layers	11.50	6%	8%	10%	1½%
Cement Masons					
Zone I	12.36				
Zone 2	11.95	9%	7%		
Zone 3	11.33	.80	.80		
Electricians					
Zone I	13.35	.55	3%+.50	.60	.10
Zone 2	12.46	.65	3%+.67		½%
Zone 3	10.58	.65	3%+.95	.75	.02
Ironworkers					
Zone 1	11.75	.975	1.665		.04
Zone 2	12.905	1.34	1.36		.03
Line Construction					
Zone 1					
Lineman	15.40	.45	3%		3/8%
Groundman	9.24	.45	3%		3/8%
Winch truck operator	10.78	.45	3%		3/8%
Millwrights	12.14	6.5%	6%	25%	½%
Piledrivermen	14.05	6%	10%		.5%
Plumbers & Steamfitters					
Zone 1	12.01	.84	1.00		.05
Zone 2	12.78	.83	1.18	.75	.25
Roofers:					
Zone 3					
Composition roofers	14.76	.77	1.50		.16

Modification Page 9

DECISION NO. PA79-3007
MOD. NO. 8, CONT'D.

PAGE 2

	Basic Hourly Rates	Fringe Benefits Payments			
		H & W	Pensions	Vacation	Education and/or Appr. Tr.
TRUCK DRIVERS:					
ZONE 2					
Truck Drivers, Building Pick-ups, dump, service trucks, flat trucks, to and including Z highway license plates	$9.47	d	e		
Transit mix, winch trucks tractors all types euclids, ross lumber and over Z plates	9.72	d	e		

FOOTNOTES:
d. $93.03 to Health & Welfare per month.
e. $57.89 to a pension Fund per month.

Modification Page 10

DECISION NO. PA80-3011
MOD. NO. 2
(45 FR 12118 - February 22, 1980)
Greene, Somerset & Potter Counties, Pennsylvania

	Basic Hourly Rates	Fringe Benefits Payments			
		H & W	Pensions	Vacation	Education and/or Appr. Tr.
CHANGE:					
Asbestos Workers					
Zone 1	$14.12	.95	1.85		
Boilermakers					
Zone 1	15.57	1.275	1.00		.02
Zone 2	13.88	5%	7%+.95		.02
Bricklayers & Stonemasons					
Zone 1	12.97	.90	2.00		.01
Zone 2	12.05	.75	1.00		.01
Carpenters					
Zone 1	11.50	6%	8%	10%	1½%
Zone 2	12.80	6%	8%	10%	
Cement masons					
Zone 1	13.26	.93	2.13		
Zone 2	11.95	9%	7%		
Electricians					
Zone 1	13.35	.55	3%+.50	.60	.10
Zone 2	10.58	.65	3%+.95	.75	.02
Ironworkers					
Zone 1	14.06	.90	1.75		.05
Zone 2	12.75	.975	1.665		.04
Laborers					
Zone 1					
Class 1	10.97	9%	9%		
Class 2	11.10	9%	9%		
Class 3	11.23	9%	9%		
Class 4	11.48	9%	9%		
Class 5	11.65	9%	9%		
Zone 2					
Class 1	11.00	9%	8%		
Class 2	11.25	9%	8%		
Class 3	11.80	9%	8%		
Line Construction					
Zone 2					
Linemen	15.40	.45	3%		3/8%
Groundman	9.24	.45	3%		3/8%
Winch truck operator	10.78	.45	3%		3/8%
Millwrights	12.14	6.5%	6%	25%	1/2%

Modification Page 11

DECISION NO. PA80-3011
MOD. NO. 2, CONT'D.

PAGE 2

	Basic Hourly Rates	Fringe Benefits Payments			
		H & W	Pensions	Vacation	Education and/or Appr. Tr.
Piledrivermen	$14.05	6%	10%		.5%
Plasterers					
Zone 1	12.19	.85	1.55		
Zone 2	13.10				.01
Plumbers					
Zone 1	12.78	.83	1.18	.75	.25
Zone 2	13.98	1.00	1.60		.07
Zone 3	12.01	.84	.80	1.00	.05
POWER EQUIPMENT OPERATORS					
Zone I					
Class I	14.424	1.05	1.00		.09
Class I-A	14.675	1.05	1.00		.09
Class I-B	14.925	1.05	1.00		.09
Class I-C	15.175	1.05	1.00		.09
Class II	14.225	1.05	1.00		.09
Class III	12.66	1.05	1.00		.09
Class III-A	13.16	1.05	1.00		.09
Class IV	11.77	1.05	1.00		.09
Class V	11.48	1.05	1.00		.09
Class V-A	11.58	1.05	1.00		.09
Class V-B	11.73	1.05	1.00		.09
Class V-C	12.48	1.05	1.00		.09
Zone II					
Class 1	13.875	1.05	1.00		.09
Class 1-A	14.125	1.05	1.00		.09
Class 1-B	14.375	1.05	1.00		.09
Class 1-C	14.625	1.05	1.00		.09
Class 2	13.725	1.05	1.00		.09
Class 3	11.85	1.05	1.00		.09
Class 3-A	12.35	1.05	1.00		.09
Class 4	11.20	1.05	1.00		.09
Class 5	10.15	1.05	1.00		.09
Class 6	10.45	1.05	1.00		.09
Class 6-A	10.55	1.05	1.00		.09
Class 6-B	10.70	1.05	1.00		.09
Class 6-C	11.45	1.05	1.00		.09
Roofers					
Zone I	14.76	.77	1.50		.16
Sheet metal workers					
Zone II	11.95	.75	.81		.02

Modification Page 12

DECISION NO. PA80-3011
MOD. NO. 2, CONT'D.

PAGE 3

	Basic Hourly Rates	Fringe Benefits Payments			
		H & W	Pensions	Vacation	Education and/or Appr. Tr.
Soft Floor Layers					
Zone 1	$12.30	.80	.98		.06
Steamfitters					
Zone 1	14.60	.85	1.19		.10
Zone 3	12.01	.84	.84	1.00	.05
Sprinkler Fitters	14.53	.85	1.20		.08
Tile Setters					
Zone 1	12.37	.90	2.30		.01
Terrazzo workers					
Zone II	13.30	.90	1.65		.01
TRUCK DRIVERS					
Zone II					
Class 1	10.86	9.6%	6.9%	a	
Class 2	10.91	9.6%	6.9%	a	
Class 3	10.93	9.6%	6.9%	a	
Class 4	11.01	9.6%	6.9%	a	
Class 5	11.20	9.6%	6.9%	a	
Class 6	11.03	9.6%	6.9%	a	
Class 7	11.19	9.6%	6.9%	a	

DECISION NO. VT80-2076 MOD#1

(45 FR September 5, 1980)
Chittenden County, Vermont

Change:

LABORERS	$ 6.60	.80	1.10		.10

SUPERSEDEAS DECISION

STATE: Massachusetts

COUNTIES: Barnstable, Bristol, Essex, Middlesex, Norfolk, Plymouth, Suffolk

DECISION NUMBER: MA80-2041

DATE: Date of Publication

Supersedes Decision Nos. MA79-2085 dated December 21, 1979 in, 44 FR 75883; MA79-2008 dated March 16, 1979, in 44 FR 16313; MA78-2079 dated Septenber 22, 1978, in 43 FR 43155; MA78-2081 dated September 22, 1978, in 43 FR 43164; MA78-2087 dated September 22, 1978, in 43 FR 43197; MA78-2088 dated September 22, 1978, in 43 FR 43203; and MA80-2001 dated March 7, 1980, in 45 FR 15020

DESCRIPTION OF WORK: Building Projects (including Residential), Heavy and Highway Projects and Marine Projects

	Basic Hourly Rates	Fringe Benefits Payments			
		H & W	Pensions	Vacation	Education and/or Appr. Tr.
ASBESTOS WORKERS:					
BARNSTABLE CO. (Barnstable, Borne, Falmouth, Mashpee, and Sandwich); NORFOLK CO. (Bellingham, Franklin, Plainville and Wrentham); PLYMOUTH CO. (Lakeville, Mattapoisett, Middleboro, Rochester and Wareham); BRISTOL CO. (All except Easton)	$11.38	1.25	1.33		
SUFFOLK, MIDDLESEX, ESSEX COUNTIES; BARNSTABLE (Remainder of County); NORFOLK (Remainder of Co.): PLYMOUTH (Remainder of Co.); BRISTOL (Easton)	12.81	1.20	1.10		.01
BOILERMAKERS	13.50	1.175	10%		.03
BRICKLAYERS: Stone Masons, Plasterers, Cement Masons (except Suffolk, Essex, Middlesex, and Brookline and Milton in Norfolk Co.), Pointers, Caulkers, and Cleaners:					
SUFFOLK CO.; MIDDLESEX (Arlington, Cambridge, Everett, Malden, Melford, Melrose and Somerville); NORFOLK (Brookline and Milton except plasterers)	11.55	.85	1.40		.12
Residential	9.24	.85	1.40		.12
Veneer Plastering	9.24	.84	1.40		.12
NORFOLK (Avon, Holbrook, Randolph and Stoughton); PLYMOUTH (Aington, Bridgewater, Brockton, Carver, Duxbury, E. Bridgewater, Halifax, Hanover, Hanson, Kingston, Marshfield, Middleboro, Pembroke, Plymouth, Norwell (except

DECISION NO. MA80-2041

BRICKLAYERS: Stone Masons, Plasterers, Cement Masons (except Suffolk, Essex, Middlesex, and Brookline and Milton in Norfolk Co.), Pointers, Caulkers, and Cleaners (Cont'd)	Basic Hourly Rates	Fringe Benefits Payments			
		H & W	Pensions	Vacation	Education and/or Appr. Tr.
plasterers) Rockland, W. Bridgewater & Whitman); BRISTOL CO. (Easton, N & S Easton)	11.80	.85	1.15		.09
Residential	9.44	.85	1.15		.10
Veneer Plastering	9.44	.85	1.15		.09
NORFOLK (Bellingham, Canton, Dedham, Foxboro, Franklin, Norfolk, Norwood, Plainville, Sharon, Walpole, Westwood and Wrentham); PLYMOUTH CO. (Lakeville only); BRISTOL (Attleboro, N. Attleboro, Mansfield, Raynham, Barrowsville, Taunton, Berkley, North Dighton, Rehoboth, Seehonk)	11.60	1.40	.80		.09
Residential	9.28	1.40	.80		.10
Veneer Plastering	9.28	1.40	.80		.09
MIDDLESEX (Reading, N. Reading, Wakefield); ESSEX CO.	11.85	.70	1.25		.09
Residential	9.48	.70	1.25		.10
Veneer Plastering	9.48	.70	1.25		.09
MIDDLESEX (Belmont, Burlington, Concord, Lexington, Lincoln, Stoneham Sudbury, Waltham, Watertown, Wayland, Weston, Winchester & Woburn	11.65	.75	1.40		.09
Residential	9.64	.75	1.00		.09
Veneer Plastering	9.64	.75	1.00		.09
MIDDLESEX (Acton, Ashby, Ayer, Bedford, Billerica, Boxboro, Carlisle, Chelmsford, Dracut, Dunstable, Ft. Devens, Groton, Littleton, Lowell, North Acton, Pepperell, Shirley, South Acton, Tewksbury, Townsend,					

Page 3

DECISIN NO. MA80-2041

	Basic Hourly Rates	Fringe Benefits Payments			
		H & W	Pensions	Vacation	Education and/or Appr. Tr.
BRICKLAYERS: Stone Masons, Plasterers, Cement Masons (except Suffolk, Essex, Middlesex, and Brookline and Milton in Norfolk Co.), Pointers, Caulkers, and cleaners (Cont'd)					
Tyngsboro, West Acton, Westford, & Wilmington	12.20	.90	.70		.09
Residential	9.76	.90	.70		.09
Veneer Plasterers	9.76	.90	.70		.09
BARNSTABLE CO.; PLYMOUTH (Marion, Mattapoisett, Rochester, and Wareham); BRISTOL (Acushnet, Dartmouth, Fairhaven, Fall River, Freetown, New Bedford, N. & S. Dartmouth Somerset, Swansea, Westport)	11.60	1.20	1.00		.09
Residential	9.28	1.20	1.00		.09
Veneer Plastering	9.28	1.20	1.00		.09
MIDDLESEX (Ashland, Farmington, Holliston, Hopkington, Hudson, Sherborn, Stow) NORFOLK (Medfield, Medway, Millis)	11.60	1.20	1.00		.09
Residential	9.28	1.20	1.00		.09
Veneer Plastering	9.28	1.20	1.00		.09
MIDDLESEX (Newton only); NORFOLK (Dover, Needham, Wellesley)	11.75	.65	1.40		.12
NORFOLK (Braintree, Cohasset, N. Weymouth, Quincy, S. Weymouth, Weymouth); PLYMOUTH (Hingham, Hull, Scituate, and the Islands of Quincy)	11.70	1.10	1.00		.09
Residential	9.36	1.10	1.00		.09
Veneer Plastering	9.36	1.10	1.00		.09

Page 4

DECISION NO. MA80-2041

	Basic Hourly Rates	Fringe Benefits Payments			
		H & W	Pensions	Vacation	Education and/or Appr. Tr.
CARPENTERS: Soft Floor Layers					
MIDDLESEX (Ashby, Ayer, Lunenburg, Shirley, Lancaster, Harvard, Groton, Pepperell, Townsend, W. Groton, and W. Townsend)	12.20	.75	1.00		.07
ESSEX (Methuen, Lawrence, Andover, N. Andover)	11.95	1.00	1.00		.05
ESSEX (Ipswich, Essex, Gloucester, Rockport, Topsfield, Hamilton, Wenham, Middleton, Danvers, Beverly, Manchester, Peabody, Salem, Marblehead)	11.15	1.00	1.00		.03
SUFFOLK, MIDDLESEX (Remainder of County); Norfolk (all except Avon, Holbrook, Randolph and Stoughton); ESSEX (Remainder of County); PLYMOUTH (Duxbury, Hanover, Hingham, Hull, Marshfield, Norwell, Pembroke, Rockland and Scituate); Bristol (Attleboro, N. Attleboro, & Seekonk)	11.95	1.00	1.00		.07
BARNSTABLE; NORFOLK (Avon, Holbrook, Randolph and Stoughton); PLYMOUTH (Remainder of Co.); BRISTOL (Remainder of County)	12.05	.70	1.00		.04
CEMENT MASONS:					
SUFFOLK; MIDDLESEX (Arlington, Cambridge, Everett, Malden, Medford, Melrose, Somerville, Stoneham, Wakefield, Winchester and Woburn); NORFOLK (Brookline and Milton)	12.15	1.15	.60		.20

DECISION NO. MA80-2041

CEMENT MASONS (CONT'D)

	Basic Hourly Rates	Fringe Benefits Payments			
		H & W	Pensions	Vacation	Education and/or Appr. Tr
MIDDLESEX (Bedford, Burlington, Lowell, Billerica, Tyngsboro, Westford, Tewksbury, Acton, Littleton, Dracut, Wilmington, Dunstable, Chelmsford, Carlisle)	10.40	.90	.70		.02
MIDDLESEX (Ashby, Ayer, Boxboro, Groton, N. Acton, Pepperell, Shirley, S. Acton, Townsend)	12.20	.90	.70		.10
MIDDLESEX (Ashland, Farmingham, Holliston, Hopkinton, Hudson, Marlboro, Maynard, Natick, Sherborne, and Stow	11.60	1.20	1.00		.09
MIDDLESEX (Newton only)	11.75	.65	1.40		.12
MIDDLESEX (Belmont, Concord, Lexington, Sudbury, Waltham, Watertown, Wayland, Weston)	11.65	.75	1.40		.09
MIDDLESEX (Reading, N. Reading); ESSEX (Andover, Amesbury, Boxford, Georgetown, Groveland, Haverhill, Lawrence, Merrimac, Methuen, N. Andover, Salisbury)	11.69	.70	.75		
ESSEX (Remainder of County)	11.85	.70	1.25		.09
ELECTRICIANS:					
MIDDLESEX (Bedford, Billerica, Boxboro, Burlington, Carlisle, Chelmsford, Dracut, Dunstable, Littleton, Lowell, Tewksbury, Tyngsboro, Westford, Wilmington)	12.10	1.15	1.10+3%		.02
MIDDLESEX (Ashby, Ayer, Ft. Devens, Groton, Pepperell, Shirley, Townsend)	12.90	.75	.70+3%		.02
MIDDLESEX (Ashland, Hopkinton, Hudson, Marlboro ans Stow)	12.78	1.02	.94+3%		.01

DECISION NO. MA80-2041

	Basic Hourly Rates	Fringe Benefits Payments			
		H & W	Pensions	Vacation	Education and/or Appr. Tr.
SUFFOLK CO.; MIDDLESEX (Remainder of County); NORFOLK (all except Avon, Holbrook, Randolph, Stoughton and Plainville); ESSEX (Lynn, Lynnfield, Nahant, Saugus, Swampscott); PLYMOUTH (Hingham, Hull)	13.23	.75	1.55+3%		.07
BARNSTABLE CO.; PLYMOUTH (Mattapoisett, Rochester, Wareham); BRISTOL COUNTY (Acushnet, Dartmouth, Fairhaven, New Bedford, N. & S. Dartmouth)	11.75	1.05	.95+3%		f
BRISTOL (Fall River, Freetown, Seekonk, Somerset, Swansea, Westport	11.30	7%	1.00+3%	6%	½%
BRISTOL (Attleboro, N. Attleboro); NORFOLK (Plainville)	12.35	.73	2.05+3%		.02
BRISTOL (Mansfield, Norton, Taunton, Raynham, Rehoboth, Dighton, Berkley)					
PLYMOUTH (Lakeville, Middleboro)	12.50	.75	1.00+3%		1/10of1%
Residential	9.25	.75	1.00+3%		1/10of1%
NORFOLK (Avon, Holbrook, Randolph, Stoughton); PLYMOUTH (Remainder of County); BRISTOL (Easton)					
Electricial Contracts over $50,000	12.78	.77	.51+3%	1.00	1%
Electrical Contracts under $50,000	9.51	.57	.38+3%	1.00	1%
ESSEX (Andover, Lawrence, Methuen, N. Andover, Salisbury, W. Newbury, Amesbury, Boxford, Georgetown, Groveland, Haverhill, Merrimac, Newbury, Newburyport, Rowley	12.37	1.00	.75+3%		.02
ESSEX (Remainder of County)					
Contracts over $30,000	12.25	.92	.31+3%		.02
Contracts $30,000 or less	11.40	.92	.31+3%		.02

DECISION NO. MA80-2041

	Basic Hourly Rates	Fringe Benefits Payments			
		H & W	Pensions	Vacation	Education and/or Appr Tr.
ELEVATOR CONSTRUCTORS	12.81	1.045	.82	a+b	.035
ELEVATOR CONSTRUCTORS' HELPERS	8.97	1.045	.82	a+b	.035
GLAZIERS:					
SUFFOLK; MIDDLESEX; NORFOLK; ESSEX; PLYMOUTH (all except Carver, Lakeville) Middleboro, Marion, Mattapoisett, Rochester, Wareham)	11.85	.77	1.19		.03
BARNSTABLE; PLYMOUTH (Carver, Lakeville, Middleboro, Marion, Mattapoisett, Rochester, Wareham); BRISTOL CO.	10.25	.62	1.38		.01
IRONWORKERS:					
BRISTOL (except Easton); BARNSTABLE; PLYMOUTH (Lakeville, Middleboro, Rochester, Wareham, Marion, Mattapoisett); NORFOLK (Plainville)	12.33	1.15	2.35		.05
SUFFOLK; NORFOLK (Remainder of Co.); ESSEX (Manchester Beverly, Peabody, Salem, Lynn, Lynnfield, Saugus, Swampscott, Marblehead, Nahant); PLYMOUTH (Remainder of County); BRISTOL (Easton, N. Easton); MIDDLESEX (Sherborn, Natick, Framingham, Weston, Newton, Arlington, Belmont, Cambridge, Somerville, Waltham, Medford, Malden, Stoneham, Woburn, Winchester, Burlington, Bedford, Lincoln, Lexington, Sudbury, Maynard, Concord, Everett	12.25	1.15	1.85		.10

DECISION NO. MA80-2041

IRONWORKERS (CONT'D)	Basic Hourly Rates	Fringe Benefits Payments			
		H & W	Pensions	Vacation	Education and/or Appr. Tr.
MIDDLESEX (Ashby, Shirley, Ayer, Boxboro, Stow, Hudson, Marlboro, Ashland, Hopkinton, Holliston)	12.85	1.15	2.05		.10
ESSEX (Remainder of County); MIDDLESEX (Remainder of County)	12.39	1.15	2.55		.06
LATHERS	11.90	1.00	.55		.03
LINE CONSTRUCTION:					
Lineman	13.50	.70	.50+3%	d	3/8of1%
Driver Groundman	9.64	.70	.50+3%	d	3/8of1%
Groundman	8.82	.70	.50+3%	d	3/8of1%
Equipment Operators	12.06	.70	.50+3%	d	3/8of1%
MARBLE, TILE & TERRAZZO WORKERS	10.90	.85	1.50		
MILLWRIGHTS	12.90	1.00	1.00		.10
PAINTERS:					
BARNSTABLE, PLYMOUTH (Marion, Mattapoisett, Rochester, Wareham); BRISTOL (Acushnet, Dartmouth, Fairhaven, New Bedford, N. & S. Dartmouth					
Brush/Roller	10.50	.80	.75		
Taping	10.60	.80	.75		
Spray	11.85	.80	.75		
Sandblast, Chipping Hammer, Power Brush	12.00	.80	.75		
Paperhangers, Vinyl Installer	11.00	.80	.75		
Steel	13.75	.80	.75		
Steel Spray	15.10	.80	.75		
Sandblast, Chipping Hammers, Power Tools (Steel)	15.25	.00	.75		

DECISION NO. MA80-2041

PAINTERS (CONT'D)	Basic Hourly Rates	Fringe Benefits Payments			
		H & W	Pensions	Vacation	Education and/or Appr Tr.
MIDDLESEX (Bedford, Billerica, Burlington, Carlisle, Chelmsford, Dracut, Dunstable, Littleton, Lowell, Tewksbury, Tyngsboro, Westford and Wilmington)					
Brush/Taper/Paper-Hanging	11.81	1.18	1.00		.04
Spray/Steel/Sandblast	13.31	1.18	1.00		.04
Repaint	10.04	1.18	1.00		.04
Residential	10.04	1.18	1.00		.04
MIDDLESEX (Ashby, Townsend, Pepperell, Groton, Shirley, and Ayer)					
Brush	12.38	.90	1.65		.04
Spray/Sandblast	13.38	.90	1.65		.04
Steel	14.50	.90	1.65		.04
Repaint	10.52	.90	1.65		.04
Residential	9.29	.90	1.65		.04
MIDDLESEX (Boxboro, Action, Concord, Stow, Maynard, Lincoln, Lexington, Hudson, Sudbury, Wayland, Weston, Waltham, Watertown, Newton, Marlboro, Framingham, Natick, Ashland, Sherborn, Hopkinton, Holliston); NORFOLK (Dover, Medfield, Medway, Millis, Needham, Wellesley)					
New Construction:					
Brush	9.00	.85	.70		.06
Steel	9.25	.85	.70		.06
Spray	9.95	.85	.70		.06
Repaint:					
Brush	8.45	.85	.70		.06
Steel	8.70	.85	.70		.06
Spray	9.40	.85	.70		.06
SUFFOLK, ESSEX, PLYMOUTH (Remainder of County); BRISTOL (Remainder of Co.); MIDDLESEX (Remainder of County); NORFOLK (Remainder of County)					
New Construction:					
Brush/Taper	12.61	.82	1.40		.04
Spray/Sandblast	13.61	.82	1.40		.04
Steel	14.88	.82	1.40		.04

DECISION NO. MA80-2041

PAINTERS (CONT'D)	Basic Hourly Rates	Fringe Benefits Payments			
		H & W	Pensions	Vacation	Education and/or Appr. Tr.
Repaint:					
Brush/Taper	10.96	.82	1.40		.04
Spray/Sandblast	11.96	.82	1.40		.04
Steel	14.88	.82	1.40		.04
PILEDRIVERMEN	12.80	1.00	1.00		
PLASTERERS:					
SUFFOLK, MIDDLESEX (Arlington, Cambridge, Everett, Malden, Melford, Melrose, Somerville); NORFOLK (Brookline, Milton); PLYMOUTH (Norwell only)	11.53	.85	1.68		.02
PLASTERERS TENDERS	9.80	.75	1.10		.10
PLUMBERS AND STEAMFITTERS:					
BARNSTABLE; BRISTOL (Acushnet, Dartmouth, Fairhaven, Fall River, Freetown, New Bedford, N. & S. Dartmouth, Somerset, Swansea, Westport, ans Seekonk) PLYMOUTH (Marion, Mattapoisett, Rochester, and Wareham)	12.14	1.05	1.63		.20
Residential	10.93	1.05	1.63		.20
MIDDLESEX (Ashby, Townsend, Groton, Shirley, Ft. Devens, Ayer-West of Greenville Branch of The Boston and Maine RR)	11.71	.80	.65	.47	.05
PLUMBERS AND PIPEFITTERS:					
MIDDLESEX (Acton, Ayer - except West of Greenville Branch of the Boston and Maine RR, Bedford, Billerica, Boxboro, Burlington, Carlisle, Chelmsford, Dracut, Dunstable, Littleton, Lowell, Pepperell, Tewksbury, Tyngsboro, Westford and Wilmington)	13.22	1.10	1.10		.02

PLUMBERS AND PIPEFITTERS (CONT'D)	Basic Hourly Rates	Fringe Benefits Payments			
		H & W	Pensions	Vacation	Education and/or Appr. Tr.
MIDDLESEX (Ashland, Belmont, Concord, Framington, Holliston, Hopkington, Lexington, Lincoln, Marlboro, Maynard, Natick, Sherborn, Sudbury, Stow, Waltham, Wayland, Weston, Hudson); NORFOLK (Medway, Medfield, Dover, Wellsley)	12.82	1.30	1.08		.05
SUFFOLK, MIDDLESEX (Remainder of Co.); NORFOLK (except Avon, Holbrook, Randolph, Stoughton, Dover, Medfield, Medway, Wellesley); ESSEX (Lynn, Lynnfield, Nahant, Saugus, Swampscott); PLYMOUTH (Hingham, Hull, Scituate,					
PLUMBERS	13.50	1.02	1.28		.05
PIPEFITTERS	13.36	.94	1.45		.07
PLYMOUTH (Remainder of Co.); BRISTOL (Remainder of County); NORFOLK (Avon, Holbrook, Randolph, Stoughton)	12.10	.95	.80		.05
PLUMBERS, PIPEFITTERS AND STEAMFITTERS:					
ESSEX (Methuen, Lawrence, Groveland, Georgetown, Andover, North Andover)	11.15	.87	1.00		.05
Residential	8.92	.87	1.00		.05
ESSEX (Remainder of Co.)	11.80	1.65	.87		.05
ROOFERS:					
BARNSTABLE CO., PLYMOUTH (Carver, Lakeville, Marion, Mattapoisett, Middleboro, Rochester, Wareham and Hingham); BRISTOL (Seekonk, Rehoboth, Dighton, Berkley, Swansea, Somerset, Fall River, Freetown, Westport, Dartmouth, New Bedford, Acushnet , Fairham)	9.95	.75	.30		

ROOFERS (CONT'D)	Basic Hourly Rates	Fringe Benefits Payments			
		H & W	Pensions	Vacation	Education and/or Appr. Tr.
PLYMOUTH (Brockton)	8.50				
ESSEX (Haverhill)	7.65			e	
SUFFOLK, MIDDLESEX, NORFOLK, ESSEX (Remainder of Co.); BRISTOL (Remainder of co.)					
Journeyman	12.05	.70	1.85		.17
Pitch Work	13.05	.70	1.85		.17
SHEET METAL WORKERS:					
BARNSTABLE, PLYMOUTH (Marion, Mattapoisett, Rochester, Wareham); BRISTOL (Acushnet, Dartmouth, Dighton, Fairhaven, Fall River, Freetown, Rehoboth, Seekonk, Somerset, Swansea, Westport, & New Bedford)	11.24	1.05	1.34		.04
SUFFOLK, MIDDLESEX, NORFOLK, ESSEX, PLYMOUTH (Remainder of County); BRISTOL (Remainder of County)	12.58	1.16	1.55		.10
SPRINKLER FITTERS:					
SUFFOLK COUNTY	12.66	.65	.95		.04
ESSEX, MIDDLESEX, BARNSTABLE, NORFOLK, PLYMOUTH, AND BRISTOL COS.	14.28	.85	1.20		
TILE AND MARBLE FINISHERS	9.90	.90	.75		
TERRAZZO FINISHERS	10.60		1.10		

DECISION NO. MA80-2041

PAID HOLIDAYS:
A-New Year's Day; B-Memorial Day; C-Independence Day; D-Labor Day; E-Thanksgiving Day; F-Christmas Day

FOOTNOTES:

a. Employer contributes 8% of basic hourly rate for 5 years or more of service or 6% of basic hourly rate for 6 months to 5 years of service as vacation pay credit

b. Holidays: A through F and the day after Thanksgiving Day

c. Holidays: A through F, Washington's Birthday, Good Friday & Christmas Eve provided employee has worked at least 45 full days during the 120 calendar days immediately prior to the holiday and the regular scheduled work days immediately preceding and following the holiday

d. Holidays: A through F, Bunker Hill Day, provided the employee has been employed 5 working days prior to any one of the listed holidays

e. Holidays: A through F, Patriots' Day, Washington's Birthday, Columbus Day, Veteran's Day, 1 week of vacation after 1 year's employment

f. Apprentice Training: $1.00 per week per journeyman

DECISION NO. MA80-2041

LABORERS (BUILDING):	Basic Hourly Rates	Fringe Benefits Payments			
		H & W	Pensions	Vacation	Education and/or Appr Tr
CLASS I:					
Laborers, Carpenter Tenders, Wrecking Laborers	9.55	.75	1.10		.10
CLASS II:					
Jackhammer Op., Pavement Breakers, Asphalt Rakers, Carbide Core Drilling Machine, Chain Saw Op., Pipelayer, Barco Type Jumping Tampers; Laser Beam, Concrete Pump, Mason Tenders, Motorized Mixers, Ride-on Motorized Buggy, Fence and Beam Rail Erectors	9.80	.75	1.10		.10
CLASS III:					
Air Track, Block Pavers, Rammers Curb Setter	10.30	.75	1.10		.10
CLASS IV:					
Blasterers, Powdermen	10.55	.75	1.10		.10
CLASS V:					
Pre Cast Floor and Roof Plank Erectors	10.05	.75	1.10		.10

DECISION NO. MA80-2041

HEAVY AND HIGHWAY LABORERS:	Basic Hourly Rates	Fringe Benefits Payments			
		H & W	Pensions	Vacation	Education and/or Appr. Tr.
CLASS I	9.55	.75	1.10		.10
CLASS II	9.80	.75	1.10		.10
CLASS III	10.30	.75	1.10		.10
CLASS IV	10.55	.75	1.10		.10

CLASS I - Carpenter Tenders, Cement Finisher Tenders, Laborers, Wrecking Laborers

CLASS II - Asphalt Rakers, Fence and Guard Rail Erector, Laser Beam Op., Mason Tender, Pipelayer, Pneumatic Drill Op., Pneumatic Tool Op., Wagon Drill Op.

CLASS III - Air Track Op., Block Pavers, Rammer, Curb Setters

CLASS IV - Blasters, Powdermen

DECISION NO. MA80-2041

BUILDING CONSRUCTION: POWER EQUIPMENT OPERATORS:	Basic Hourly Rates	Fringe Benefits Payments			
		H & W	Pensions	Vacation	Education and/or Appr. Tr.
CLASS I	13.41	1.18	1.15	a	.03
CLASS II	13.29	1.18	1.15	a	.03
CLASS III	11.22	1.18	1.15	a	.03
CLASS IV	12.23	1.18	1.15	a	.03
CLASS V	9.97	1.18	1.15	a	.03
CLASS VI	10.54	1.18	1.15	a	.03

CLASS I - Cranes, Shovels, Truck Cranes, Cherry Pickers, Draglines, Trench Hoes, Backhoes, Three Drum Machines, Derricks, Pile Drivers, Elevator Towers, Hoists, Gradalls, Shovel Dozers, Front end Loaders, Fork Lifts, Augers, Boring Machines, Rotary Drills, Post Hole Hammers, Post Hole Diggers, Pumpcrete Machines, Asphalt Plant (on Site), Concrete Batching and/or Mixing Plant (on Site), Crusher Plant (on Site), Paving Concrete Mixers, Timber Jacks, Boom over 150' Including Jib additional $.50 per hour; Boom over 185' including Jib - additional $.90 per hour; Boom over 210' Including Jib - additional $1.25 per hour Boom over 250' including Jib - additional $1.90 per hour; Boom over 295' including Jib-additional $2.65 per hour

CLASS II - Sonic or Vibratory Hammer, Graders, Tandem Scrapers, Concrete Pumps, Bulldozers, Tractors, York Rakers, Mulching Machines, Portable Steam Boiler, Portable Steam Generators, Rollers, Spreaders, Tampers (Self Propelled or Tractor Drawn), Asphalt Pavers, Mechanic Maintenance, Paving Screed Machines, Stationary Steam Boilers, Paving Concrete Finishing Machines, Cal Trucks, Ballast Regulators, Switch Tampers, Rail Anchor Machinery, Tire Trucks (when operated by the Employer on the job site)

CLASS III - Pumps (1-3 Grouped), Compressors, Welding Machines (1-3 Grouped), Generators, Concrete Vibrator, Lighting Plants, Heaters (Power Driven 1-5), Well-Point System (Operating and Installing), Syphones-Pulsometers, Concrete Mixers, Values Controlling Permanent Plant Air to Steam, Conveyors, Jackson Type Tampers, Single Diapragn Pump, Lighting Plants

CLASS IV - Assistant Engineers (Firemen)

CLASS V - Oilers (other than truck cranes and gradalls)

CLASS VI - Oilers on Truck cranes and Gradalls

PAID HOLIDAYS:
A-New Year's Day; B-Memorial Day; C-Independence Day; D-Labor Day
E-Thanksgiving Day; F-Christmas Day

FOOTNOTE: a. HOLIDAY: A through F, Washington's Birthday, Columbus Day, Veterans Day and Patriots Day.

DECISION NO. MA80-2041

HEAVY & HIGHWAY CONSTRUCTION

POWER EQUIPMENT OPERATORS

	Basic Hourly Rates	Fringe Benefits Payments			
		H & W	Pensions	Vacation	Education and/or Appr Tr.
GROUP 1	13.41	1.18	1.15	a	.03
Hourly premium for boom lenghts including jib					
over 150 feet + $.50					
Over 185 feet + $.90					
Over 210 feet + 1.25					
Over 250 feet + 1.90					
Over 295 feet + 2.65					
GROUP 2	13.29	1.18	1.15	a	.03
GROUP 3	11.22	1.18	1.15	a	.03
GROUP 4	12.23	1.18	1.15	a	.03
GROUP 5	9.97	1.18	1.15	a	.03
GROUP 6	10.54	1.18	1.15	a	.03

GROUP 1 - Power Shovels, Cranes, Truck Cranes, Derricks, Pile Driver, Trenching Machines, Mechanical Hoists Pavement Breakers, Cement Concrete Pavers, Draglines, Hoisting Engines, Three Drum Machines, Pumpcrete Machines, Uke Loaders, Shovel Dozer, Front End Loaders, Mucking Machines, Shaft Hoists, Steam Engines, Backhoe, Gradalls, Cable ways, Fork Lifts, Cherry Pickers, Boring Machines, Rotary Drills, Post Hole Hammers, Port Holes Diggers, Asphalt Plant on Job Site, Concrete Batching and/or Mixing Plant on Job Site, Crusher Plant on Job Site, Paving Concrete Mixers, Timber Jacks

GROUP 2 - Sonic or Vibratory Hammers, Graders, Scrapers, Tandem Scrapers, Bulldozer, Tractors, Mechanic Maintenance, York Rakes, Mulching Machines Paving Screed Machines, Stationary Steam Boilers, Paving Concrete Finishing Machines, Grout Pumps, Portable Steam Boilers, Portable Steam Generators, Rollers, Spreaders, Asphalt Pavers, Locomotives or Machines used in Place thereof, Tampers, Self Propelled or Tractor Drawn, Cal Track, Ballast Regulators, Rail Anchor Machines, Switch Tampers

GROUP 3 - Pump (1-3 Grouped), Compressors, Welding Machine (1-3 Grouped), Generators, Lighting Plants, Heaters (Power Driven) (-5), Syphons-Pulsometers, Concrete Mixers, Valves Controlling Permanent Plant Air Steam, Conveyors, Wellpoint System (Operating and Installing)

DECISION NO. MA80-2041

POWER EQUIPMENT OPERATORS (CONT'D)

GROUP 4 - Assistant Engineers (Fireman)

GROUP 5 - Oilers (Other than Truck Cranes & Gradalls)

GROUP 6 - Oilers (on Truck Cranes & Gradalls)

FOOTNOTES:

a. Holidays - New Year's Day, Memorial Day, Independence Day, Labor Day, Thanksgiving Day, Christmas Day, Washington's Birthday, Columbus Day, Veterans Day and Patriots Day

DECISION NO. MA80-2041

MARINE CONSTRUCTION

POWER EQUIPMENT OPERATORS

	Basic Hourly Rates	Fringe Benefits Payments			
		H & W	Pensions	Vacation	Education and/or Appr. Tr.
GROUP I	13.41	1.18	1.15	a	.03
GROUP II	14.64	1.18	1.15	a	.03
GROUP III	13.36	1.18	1.15	a	.03
GROUP IV	13.29	1.18	1.15	a	.03
GROUP V	11.22	1.18	1.15	a	.03
GROUP VI	12.23	1.18	1.15	a	.03
GROUP VII	9.97	1.18	1.15	a	.03
GROUP VIII	10.54	1.18	1.15	a	.03

GROUP I - Shovels, Cranes, Truck Cranes, Cherry Pickers, Derricks, Pile Drivers two or more Drum Machines, Lighters , Derrick Boats, Trenching, Mechanic Hoists Pavement Breakers, Cement Concrete Pavers, Draglines, Hoisting Engines, Pumpcrete Machines, Elevating Graders, Shovels Dozers, Front End Loaders, Backhoe, Gradalls, Cable Way, Boring Machines, Rotary Drills, Post Hole Hammer, Post Hole Diggers, Fork Lifts, Timber Jacks, Asphalt Plant (on site), Concrete Batching &/or Mixing Plant (on site), Crusher Plant, (on site), Paving Concrete Mixers; Boom over 150' including Jib- additional $.50 per hour, Booms over 185' including Jib - additional $.90 per hour; Booms over 210' including Jib - additional $1.25 per hour; Booms over 250' including Jib - additional $1.90 per hour; Booms over 295' including Jib - Additional $2.65 per hour

GROUP II - Master Mechanic

GROUP III - Swinger Engines

GROUP IV - Portable Steam Boilers, Portable Steam Generators, Sonic or Vibratory Hammer, Graders, Scrapers, Tandem Scrapers, Concrete Pumps, Bulldozers, Tractors, York Rakes, Mulching Machines, Rollers, Spreader, Tamper self-propelled or Tractor Drawn, Asphalt Pavers, Concrete Mixers with side Loaders, Mechanics - Maintenance, Cal Trucks, Ballast, Regulator, Switch Tampers, Rail Anchor Machines, Tire Trucks

GROUP V - Pumps, Compressors, Welding Machines, Heaters (Power Driven), Valves controlling Permanent Plan Air or Steam, Well Point Systems, Augers - Powered by Independence Engines & Attached to Pile Drivers, Hydraulic Saws, Genenerators, Lighting Plants, Syphons-Pulsometers, Concrete Mixers, Conveyors

DECISION NO. MA80-2041

POWER EQUIPMENT OPERATORS (CONT'D)

GROUP VI - Assistant Engineers (Fireman)

GROUP VII - Oiler (other than Truck Cranes and Gradalls)

GROUP VIII - Oilers on Truck Cranes and Gradalls

PAID HOLIDAYS:

A-New Year's Day; B-Memorial Day; C-Independence Day; E-Thanksgiving Day; F-Christmas Day

FOOTNOTE:

A. Holidays: A through F; Washington's Birthday; Patriots' Day; Columbus & Veterans' Day

Unlisted classifications needed for work not included within the scope of the classifications listed may be added after award only as provided in the labor standards contract clauses (29 CFR 5.5(a)(1)(ii)).

DECISION NO. MA80-2041

BUILDING, HEAVY & HIGHWAY CONSTRUCTION TRUCK DRIVERS	Basic Hourly Rates	Fringe Benefits Payments			
		H & W	Pensions	Vacation	Education and/or Appr. Tr
CLASS I	9.565	1.00	1.10	a+b	
CLASS II	9.735	1.00	1.10	a+b	
CLASS III	9.805	1.00	1.10	a+b	
CLASS IV	9.925	1.00	1.10	a+b	
CLASS V	10.025	1.00	1.10	a+b	
CLASS VI	10.315	1.00	1.10	a+b	
CLASS VII	10.605	1.00	1.10	a+b	

CLASS I - Station Wagons, Panel Trucks and Pickup Trucks

CLASS II - Two axle Equipment; Helpers on Low Bed When Assigned at the Discretion of the Employer, Warehousemen, Forklift Operators

CLASS III - Three Axle Equipment and Tiremen

CLASS IV - Four and Five Axle Equipment

CLASS V - Specialized Earth Moving Equipment under 35 tons other than Convential type trucks, Low Bed, Vachual, Mechanics, Paving Restoration Equipment, Mechanics

CLASS VI - Specialized Earth Moving Equipment over 35 Tons

CLASS VII - Trailers for Earth Moving Equipment (Double Hookup)

PAID HOLIDAYS:

A. New Year's Day; B-Memorial Day; C-Independence Day; E-Thanksgiving Day; F-Christmas Day

FOOTNOTES:

a. One half day's pay each month in which an employee has worked 15 days provided he has been employed for 4 months.

b. Holidays: A through F, Washington's Birthday, Columbus Day, Veteran's Day and Patriots' Day provided an employee works two days of the calendar week in which the holiday falls

SUPERSEDEAS DECISION

STATE: Pennsylvania

COUNTIES: Lackawanna, Susquehanna, Wayne and Wyoming

DECISION NO. PA80-3056

DATE: Date of Publication

Supersedes Decision No. PA80-3034 dated April 18, 1980, in 45 FR 26651.

DESCRIPTION OF WORK: Building Erection and Foundation Excavation, (does not include single family homes or apartments up to and including 4 stories).

	Basic Hourly Rates	Fringe Benefits Payments			
		H & W	Pensions	Vacation	Education and/or Appr. Tr.
ASBESTOS WORKERS	$12.225	.80	.90		.01
BOILERMAKERS	15.57	1.275	1.00		.02
BRICKLAYERS; Stonemasons:					
Scranton in Lackawanna County	11.85	.90	1.00		.01
Carbondale in Lackawanna Co.	10.45	.85	.70		
Susquehanna and Wyoming Cos.	11.75	.85	.75		
CARPENTERS:					
Lackawanna, Susquehanna and Wayne Counties	11.61	.70	.50		.05
Wyoming County:					
East of Susquehanna River	12.12	.70	.50		.05
West of Susquehanna River	11.79	.60	.70		.05
CEMENT MASONS:					
Wyoming, Wayne Susquehanna Counties, Scranton in Lackawanna County	12.55				
Carbondale in Lackawanna Co.	10.45		1.55		
ELECTRICIANS:					
Lackawanna, Susquehanna and Wayne County	11.75	.85	3%+.50	1.00	.10
Wyoming County:					
East of Susquehanna River	11.75	.85	3%+.50	1.00	.10
West of Susquehanna River	12.54	.65	3%+1.05		.03
ELEVATOR CONSTRUCTORS	11.27	.895	.89	a+b	.03
ELEVATOR CONSTRUCTORS' HELPERS	70%JR	.895	.89	a+b	.03
ELEVATOR CONSTRUCTORS' HELPERS (PROB.)	50%JR				
GLAZIERS	11.00	.65	.85		
IRONWORKERS:					
Lackawanna, Wayne and Wyoming Cos.					
Structural and Ornamental	13.35	e			.10
Reinforcing	13.25	e			.10
Susquehanna County	11.90	.85	1.05		.05

DECISION NO. PA803056

Page 2

	Basic Hourly Rates	Fringe Benefits Payments			
		H & W	Pensions	Vacation	Education and/or Appr. Tr.
LABORERS:					
Lackawanna, Wayne, Susquehanna and Northern part of Wyoming County:					
Unskilled and Window Cleaners	$9.70	.67	1.00		
Semi skilled Laborers; Jackhammer operators, (each man when two required for operation of jackhammer); Vibrator and buster men; Wagon drill and all men handling dynamite; Gas buggies; 2" pumps and concrete mixers (up to 2 bags) and all penumatic tools	9.85	.67	1.00		
Plaster tenders and mason tenders and handling of all material to be used; Masons and Scaffold builders	10.10	.67	1.00		
Non-metallic pipe layers and making of joints, clay, terra cotta, ironstone, vitrified concrete handling of burning torches; Asphalt or other material	9.85	.67	1.00		
Southern part of Wyoming County:					
Unskilled	9.87	.65	.85		
Semi skilled laborers; Pneumatic and other mechanical tool operator; 2" pump or under; Handling and mixing of all material used by masons from stock pile to mason; Non-metallic pipelayer and making of joints, clay, terra cotta, ironstone, vitrified concrete; Handling of burning torches; Asphalt or other hot material; Cement finishers and blasters' helpers	10.07	.65	.85		

DECISION NO. PA80-3056

Page 3

	Basic Hourly Rates	Fringe Benefits Payments			
		H & W	Pensions	Vacation	Education and/or Appr. Tr
LABORERS: (Cont'd)					
Southern part of Wyoming County (Cont'd):					
Plasterers' tenders; Blaster; Wagon drill operators	$10.19	.65	.85		
Mason tenders and scaffold builders	10.27	.65	.85		
LATHERS	12.04		.10		.01
LEADBURNERS	10.75	.40	.25	c	.01
LINE CONSTRUCTION:					
Lineman; Dynamite man	12.37	.55	3%		3/8%
Winch Truck	8.68	.55	3%		3/8%
Groundman	8.30	.55	3%		3/8%
MARBLE SETTERS	10.70		1.30		
MILLWRIGHTS:					
Lackawanna, Susquehanna and Wayne Counties	12.19	.70	.50		.05
Wyoming County:					
East of Susquehanna River	12.12	.70	.50		.05
West of Susquehanna River	13.52	.60	.70		.05
PAINTERS:					
Brush and Roller	10.00		1.20		
Spray	11.50		1.20		
Steel	11.00		1.20		
PILEDRIVERMEN	11.97	2.63	1.40	d	.13
PLASTERERS	12.63				
PLUMBERS	12.54	.80	1.25		.05
POWER EQUIPMENT OPERATORS:					
Group 1	13.14	7.9%	10.3%	a	1.8%
Group 2	12.85	7.9%	10.3%	a	1.8%
Group 3	11.97	7.9%	10.3%	a	1.8%
Group 4	11.20	7.9%	10.3%	a	1.8%
Group 5	10.72	7.9%	10.3%	a	1.8%
Group 6	9.80	7.9%	10.3%	a	1.8%
Group 7	13.39	7.9%	10.3%	a	1.8%
Group 7-A	13.64	7.9%	10.3%	a	1.8%
Group 7-B	13.89	7.9%	10.3%	a	1.8%

FOOTNOTE:

a. Paid Holidays: New Year's Day, Memorial Day, Independence Day, Labor Day, Thanksgiving Day and Christmas Day, provided the employee works the day before and after the holiday.

POWER EQUIPMENT OPERATORS - CLASSIFICATIONS

Group 1: Machines doing hook work; Any machine handling machinery; Cable spinning machines; Helicopters; Machines similar to the above

Group 2: All types of Cranes; All types of backhoes; Cableways; Dragline; Keystones; All types of shovels; Derricks; Trench shovels; Trenching machines; Hoist with two towers; Pavers, 21E and over; All types of overhead cranes; Building hoists (double drum); Gradalls; Mucking machines in tunnel; All front end loaders, 3½ cu. yds. and over; Tandem scrapers; Pippin type backhoes; Boat captains; Batch plant operators (concrete); Drills; Self-contained rotary drills; Fork lifts, 20 ft. lift and over; machine similar to the above

Group 3: Conveyors; Building hoists (single drum); Scrapers and Tournapulls; Spreaders; High or low pressure boilers; Concrete pumps; Well drillers; Bulldozers and tractors; Asphalt plant engineers; Roller (high grade finishing); Ditch witch type trencher; All loaders under 3½ cu. yds.; Mechanic-welder; Motor patrols; Drill helper-self contained rotary drills; Core drill operator; Forklift trucks, under 20 ft. lift; Machine similar to the above

Group 4: Welding machines; Well points; Compressors; Pumps; Heaters; Farm tractors; Form line garders; Fine grade machines; Road finishing machines; Concrete breaking machines; Rollers; Seaman pulverizing mixer; Power broom; Seeding spreaders; Tireman (for power equipment); Machines similar to above

Group 5: Fireman, Grease truck

Group 6: Oilers and deck hands (personnel boats); Core drill helper

Group 7: All machines with booms (including jib, masts, leads, etc.); 100 ft. and over

Group 7-A: 150 ft. and over

Group 7-B: 200 ft. and over

	Basic Hourly Rates	Fringe Benefits Payments			
		H & W	Pensions	Vacation	Education and/or Appr. Tr.
ROOFERS:					
Composition and Kettleman	$11.82		1.13		
SHEET METAL WORKERS	11.95	.75	.81		.02
SOFT FLORR LAYERS:					
Lackawanna, Wayne and Susquehanna Counties	11.61	.70	.50		.05
Wyoming County	10.35	.60	.70		.05
SPRINKLER FITTERS	14.53	.85	1.20		.08
PIPEFITTERS	12.99	.65	.95		.05
TRUCK DRIVERS:					
Class I	10.32				
Class II	10.39				
Class III	10.88				

TRUCK DRIVERS - CLASSIFICATIONS

Class I: Helper; Stake body truck (single axle); Dumpster

Class II: Dump trucks; Tandem and batch trucks; Semi-trailers; Agitator mixer trucks; Ready mix and dumpcrete type vehicles aaphalt distributors; Farm tractor when used for transporation; Stake body truck (tandem)

Class III: Euclid type; Off-highway equipment - back or belly dump trucks and double hitched equipment; Straddle (Ross) carrier; Low-bed trailers

DECISION NO. PA80-3056

Page 6

WELDERS - Receive rate prescribed for craft performing operation to which welding is incidential.

PAID HOLIDAYS:
A-New Year's Day; B-Memorial Day; C-Independence Day; D-Labor Day; E-Thanksgiving Day; F-Christmas Day.

FOOTNOTES:

a. Employer contributes 8% basic hourly rate for 5 years or more of service or 6% basic hourly rate for 6 months to 5 years of service as Vacation Pay Credit.

b. Paid Holidays: A through F, plus the Friday after Thanksgiving Day.

c. Paid Holidays: A through F and Washington's Birthday, Good Friday, and Christmas Eve, provided the employee has worked 45 days for the employer during the 120 days prior to the holiday and is available for work the days preceding and following the holiday.

d. Paid Holidays: Washington's Birthday, Good Friday, Memorial Day, Labor Day; Presidential Election Day; Veterans' Day , Thanksgiving Day.

e. Employer contributes $2.70 to a Combined Health and Welfare and Pension Fund.

SUPERSEDEAS DECISION

STATE: Wisconsin County: Juneau
DECISION NUMBER: WI80-2078 DATE: Date of publication
Supersedes Decision No. WI78-2134, dated Oct. 27, 1978 in 43 FR 50366
DESCRIPTION OF WORK: Building Construction, (exlcuding single family homes and apartments up to and including 4 stories

	Basic Hourly Rates	Fringe Benefits Payments			
		H & W	Pensions	Vacation	Education and/or Appr. Tr.
ASBESTOS WORKERS	$12.55	.95	1.00	1.25	.14
BOILERMAKERS	12.87	1.275	1.00		.05
BRICKLAYERS & STONEMASONS	11.00	.75	.35		
CARPENTERS:					
So. of Hwy. #21 & E. of County Trunk #80					
Carpenters	11.72	.60	.80		.05
Millwrights	12.12	.60	.80		.05
Piledrivermen	12.12	.60	.80		.05
Soft Floor layers	11.72	.60	.80		.05
Camp Douglas, Huster, Elroy & Vic.:					
Carpenters	11.67	.60	.80		.05
Millwrights	12.07	.60	.80		.05
Piledrivermen	12.07	.60	.80		.05
Soft floor layers	11.67	.60	.80		.05
N. E. section of Co. above Camp Douglas					
Carpenters	11.67	.60	.80		.05
Millwrights & Piledrivermen	12.07	.60	.80		.05
CEMENT MASONS	10.23	.75	.40		
ELECTRICIANS	11.64	.55	3%	8%	11/8[d]
ELEVATOR CONSTRUCTORS (Western ½ of Co.)	11.85	1.045	.69	a+b	.035
Elevator Constructors' Helpers (Western ½)	8.295	1.045	.69	a+b	.035
Elevator Constructors' Helpers (Prob.)	50JR				
Elevator Constructors' Eastern ½ of Co.)	12.04	1.045	.82	a+b	.035
Elevator Constructors' Helpers	8.43	1.045	.82	a+b	.035
Elevator Constructors' Helpers (Prob.)	50JR				
GLAZIERS	11.93	.70			.03
IRONWORKERS, Structural, Ornamental & Reinforcing	12.31	1.25	1.00		.07
LABORERS:					
General: Mason Tenders Plasterer Laborer	8.87	.55	.45		.03
Mortar Mixer, Air Hammer & Jack Hammer Operators, Air Spade Operators	9.02	.55	.45		.03

DECISION NO. WI80-2078 (Cont'd)

	Basic Hourly Rates	Fringe Benefits Payments			
		H & W	Pensions	Vacation	Education and/or Appr Tr
LATHERS	$10.30	.55	.20	.50	.01
PAINTERS:					
Brush	9.68		.70		
Structural Steel	9.95		.70		
Swing stage, bos'n chair	10.00		.70		
Spray	10.37		.70		
PLASTERERS	11.05				
PLUMBERS & STEAMFITTERS	12.65	.90	.60		.05
ROOFERS	10.00				
SHEET METAL WORKERS	10.78	.75	.60		.04
TILE SETTERS	9.75	.75	.35		
Welders - receive rate prescribed for craft performing operation to which welding is incidental.					

PAID HOLIDAYS:
A-New Year's Day; B-Memorial Day; C-Independence Day; D-Labor Day; E-Thanksgiving Day; F-Christmas Day

FOOTNOTES:

a. Employer contributes 8% of regular hourly rate to Vacation Pay Credit for employee who has worked in business more than 5 years. Employer contributes 6% of regular rate to Vacation Pay Credit for employee who has worked in business less than 2 years.

b. Holidays: A through F

[FR Doc. 80-27860 Filed 9-11-80; 8:45 am]
BILLING CODE 4510-27-C

DECISION No. WI80-2078 (Cont'd)

POWER EQUIPMENT OPERATORS	Basic Hourly Rates	Fringe Benefits Payments			
		H & W	Pensions	Vacation	Education and/or Appr. Tr.
GROUP I	$12.02	1.05	.90		.05
GROUP II	11.77	1.05	.90		.05
GROUP III	11.47	1.05	.90		.05
GROUP IV	11.37	1.05	.90		.05
GROUP V	10.96	1.05	.90		.05
GROUP VI	10.62	1.05	.90		.05

GROUP I - Cranes, Shovels, Draglines, Backhoes, Clamshells, Derricks, Caisson Rigs, Pile Driver, Skid Rigs, Dredge, Operator and Traveling Crane (Bridge Type), Concrete Paver (over 27E), Concrete Spreader and Distributor

GROUP II - Material Hoist, Tractor or Truck Mounted Hydraulic Backhoe, Tractor or Truck Mounted Hydraulic Crane (5 Tons or Under), Manhoist, Tractor (Over 40 h.p.), Bulldozer, Endloader, (over 40 h.p.), Forklift (25' and over), Motor Patrol, Scraper Operator, Sideboom, Straddle Carrier, Mechanic and Welder, Bituminous Plant and Paver Operator, Roller (over 5 tons), Rotary Drill Operator and Blaster, Trencher (Wheel Type or Chain type having over 8-Inch Bucket)

GROUP III - Concrete and Grout Pumps, Backfiller, Concrete auto Breaker (Large), Concrete Finishing Machine (Road Type), Roller (Rubber Tire), Concrete Batch Hopper, Concrete Conveyor Systems, Concrete Mixers (14S or over), Screw Type Pumps, and Gypsum Pumps, Tractor, Bulldozer, Endloader (under 40 h.p.), Pumps (Well Points), Trencher (Chain Type having Bucket 8-Inch and Under), Industrial Locomotives, Roller (Under 5 Tons) and Firemen-(Pile Drivers and Derricks)

GROUP IV - Hoists (Automatic), Forklift (12' to 25') Tampers-Compactors Auto Breaker, Hydro-Hammer (Small), Booms and Sweeper, Hoists (Tugger) Stump Chipper (Large), Boats, Safety Work, Barges and Launch)

GROUP V - Shoulding Machine Operator, Screed Operator, Farm or Industrial Tractor mounted Equipment, Post Hole Diggers, Stone Crushers and Screening Plants, Firemen (Asphalt Plants), Air Compressor(300 CFM or over)

GROUP VI - Generators over 15 KW, Pumps over 3", Augers (vertical and horizontal), Combination Small Equipment Operator; Air, Electric Hydraulic Jacks (Slip Form), Compressor (Under 300 CFM) Welding Machines Heaters (Mechanical), Prestress Machines, Bobcats, Generators (Under 150 KW), Pumps (3" and under); Winches (Small Electric), Oiler and Greaser, Boiler Operators (Temporary Heat), Rotary Drill Helper, Conveyor, Forklift (12' and Under)

federal register

Friday
September 12, 1980

Part V

Department of Health and Human Services

Food and Drug Administration

Prescription Drugs; Patient Package Inserts Requirements and Draft Guideline Patient Package Inserts

DEPARTMENT OF HEALTH AND HUMAN SERVICES

Food and Drug Administration

21 CFR Part 203

[Docket No. 79N-0186]

Prescription Drug Products; Patient Package Inserts Requirements

AGENCY: Food and Drug Administration.

ACTION: Final rule.

SUMMARY: The Food and Drug Administration (FDA) adopts final regulations establishing requirements and procedures for the preparation and distribution of patient package inserts for prescription drugs for human use. The package inserts will inform the patient about the drug product. This action is intended to promote the safe and effective use of prescription drug products by patients and to ensure that patients have the opportunity to be informed of the benefits and risks involved in the use of prescription drug products. The agency intends to apply the regulations to 10 drugs or drug classes during an initial implementation program. Further evaluation of the costs and benefits of the program will guide the agency in deciding whether to extend, revise, or defer these requirements.

EFFECTIVE DATES: October 14, 1980. The regulations are effective with respect to particular drugs or drug classes 180 days after publication of a notice in the Federal Register applying the regulations to the drug or drug class.

FOR FURTHER INFORMATION CONTACT:

About this rule: Michael C. McGrane, Bureau of Drugs (HFD-30), Food and Drug Administration, 5600 Fishers Lane, Rockville, MD 20857, 301-443-5220.

About the FDA patient package inserts program: Louis A. Morris, Bureau of Drugs (HFD-107), Food and Drug Administration, 5600 Fishers Lane, Rockville, MD 20857, 301-443-4893.

SUPPLEMENTARY INFORMATION: In the Federal Register of July 6, 1979 (44 FR 40016), FDA proposed general regulations that would require manufacturers to distribute patient package inserts to patients for prescription drug products for human use. This proposal resulted from the agency's more than 10 years experience with patient labeling for specific drugs.

Note.—The proposal used the term "patient labeling" to describe these leaflets. The agency has adopted the term "patient package inserts" in the final regulation. That term already enjoys considerable recognition in the health care community. Thus, "patient package inserts" will also be used throughout this preamble.

Purposes and Benefits of Patient Package Inserts

Patient package inserts represent a significant initiative for improving health care for Americans. Through their use patients will be able to participate increasingly in decisions having to do with the use of prescription drugs, substances which, like few others, affect human life. When used properly, prescription drugs have enormous potential for reducing human suffering and economic loss. When used less than optimally, however, this potential can be seriously diluted.

Traditionally, the extent of patient knowledge on prescription drugs rested solely with the treating physician; information on prescription drugs was not available independently to patients. It has been only recently that information on prescription drugs has achieved some degree of general availability. The Physicians' Desk Reference, long the sole province of physicians and pharmacists, is now found in book stores, albiet at substantial prices. Its contents, however, consist of no more than the official professional labeling of drugs, labeling which is fully understood only by health professionals. Other information is available to patients in the form of privately authored treatises on drug actions, such volumes reflect only the views of their authors, consumers are not necessarily aware of their availability or their veracity, and again, they must be purchased at not insubstantial prices. Finally, randomly available information in the press is at best piecemeal, and often confusing. Thus, generally, today's users of prescription drugs are still not routinely exposed to information about proper drug use, except insofar as that information is imparted, usually orally, by the prescribing physician.

FDA believes that providing complete and readily understandable information on drugs to patients can help achieve maximum benefits from their use, and reduce their potential for causing harm. Patient package inserts for prescription drugs, through which information about a drug will be provided in lay language directly to patients at the time the drug is dispensed, are intended to increase patient knowledge about prescription drugs, and thereby promote their optimal use.

FDA's research confirms that patient package inserts will, in fact, fulfill these important purposes. Overall, existing patient package inserts are read and understood by a high proportion of patients. Consumers hold favorable attitudes towards patient package inserts and support developing them for additional drugs. In the case of drugs taken for a short time period (i.e., antibiotics), written information has been found to enhance compliance with prescribed regimens. Additionally, patient package inserts have been found to play a role in decreasing inappropriate drug use (e.g., for estrogens). Possible negative effects—increases in reported side effects or returned prescriptions resulting from patient package inserts—have not emerged in these studies. Indeed, despite continuing controversy about the value of patient package inserts, certain pharmaceutical companies have initiated patient package inserts programs absent Federal compulsion to do so.

Existing FDA Patient Package Inserts Requirements

Since the late 1960's, FDA has on several occasions required that package inserts written in nontechnical language be provided directly to patients when certain prescription drug products are dispensed. In the Federal Register of June 18, 1968 (33 FR 8812), FDA required that each isoproterenol inhalation drug product dispensed to a patient bear a two-sentence warning on the container (now codified in 21 CFR 201.305). In the Federal Register of June 11, 1970 (35 FR 9001), FDA issued a regulation requiring certain information about the use of oral contraceptive drug products to be made available to patients (now codified in 21 CFR 310.501).

In issuing patient labeling requirements (21 CFR 310.515) in the Federal Register of July 22, 1977 (42 FR 37636) for estrogenic drug products, which are drugs used primarily to treat menopausal symptoms in women, FDA expanded significantly the scope of its patient labeling requirements. Unlike oral contraceptives, which are normally marketed in unit-of-use packages that contain a one-cycle supply, estrogenic drug products are usually custom packaged by the dispenser each time a prescription is filled. The unit-of-use packaging of oral contraceptives permitted manufacturers to include the leaflet in the package so the labeling was automatically dispensed with the package. (Separate, longer leaflets were required to be available from prescribing physicians.) Such was not the case, however, for estrogenic drug products, where the labeling is not affixed directly to the dispensing package by the manufacturer. Accordingly, the patient labeling requirement for these products placed significantly greater obligations on the

dispenser to ensure that the labeling is provided with the product.

In the Federal Register of January 31, 1978 (43 FR 4212), FDA substantially revised the patient labeling regulations for oral contraceptives (21 CFR 310.501). The agency abandoned the approach of the earlier regulation, and modeled the new requirements after the recently-issued requirements for estrogenic drugs. Under the revised regulation, significantly more detailed information, some of which reflected newly discovered hazards, is provided when the drug product is dispensed. A summary of the most important information about the use of the drug product, which also calls the patient's attention to the more detailed patient labeling, is also provided as part of the labeling.

FDA has also established a patient labeling requirement for intrauterine devices (IUD's) for contraception that are regulated as prescription drug products (21 CFR 310.502), for IUD's regulated as medical devices (21 CFR 801.427), and for progestational drug products (21 CFR 310.516).

FDA requirements for patient package inserts for prescription drug products have centered on largely elective drug products that present significant risks to patients. They have as a consequence also been intended to afford patients the ability to participate with physicians in choosing whether to use the products. In these cases, FDA concluded that patients needed information upon which to decide whether to take or to continue to use the drug product.

Following the development of the patient labeling requirement for oral contraceptives in 1970, FDA began evaluating the usefulness of patient package inserts for prescription drug products generally and studied ways to present the information to patients. In response to suggestions from the National Food and Drug Advisory Committee, FDA in 1974 began a patient prescription drug labeling project to investigate whether FDA patient package inserts efforts should be expanded to apply to a variety of prescription drug products. Since the project began, FDA has (1) discussed patient package inserts issues with interested and potentially affected persons, (2) reviewed scientific literature about patients' needs and desires for patient package inserts, (3) conducted research projects to evaluate existing and model patient package inserts, and (4) reviewed existing methods for communicating drug information to patients.

Between September 1974 and June 1975, FDA officials met individually with nine organizations representing physicians, pharmacists, and the pharmaceutical industry, and in July 1975 met with consumer representatives to discuss the general concept of patient package inserts. The minutes of each meeting have been placed on file in the office of the Hearing Clerk (HFA-305), Food and Drug Administration, Rm. 4-62, 5600 Fishers Lane, Rockville, MD 20857.

On March 31, 1975, FDA was petitioned by a consortium of consumer organizations to require written warning information on labels of some prescription drug products. The petitioners expressed concern that physicians may not always provide patients with the information needed to use drugs safely and effectively, that patients may not understand the information provided orally and may be reluctant to ask questions, and that patients may need written material in case they forget the information that was provided orally (Onek, et al., 1975). A copy of the petition has been placed on file in the FDA Hearing Clerk's office. A notice published in the Federal Register of November 7, 1975 (40 FR 52075), reviewed briefly the consumer petition and the opinions and views on patient package inserts that had been obtained from the professional, trade, and consumer groups that had met with the agency. The notice asked for comments to help formulate a policy on patient package inserts for prescription drug products. The notice specifically asked for comments on the consumer petition, and also asked for comments on patient package inserts generally. The agency received more than 1,000 comments on the November 7, 1975 notice. The agency carefully reviewed the comments and either adopted them in the proposed patient package inserts regulations or responded to them in its preamble.

To explore and focus further the issues relating to patient package inserts, FDA hosted a series of four separate meetings in May and June 1976, in which FDA officials met with a group of consumer advocates and representatives from the pharmaceutical industry, medical associations, pharmacy associations, and allied health professions. Minutes of these meetings have also been placed on file in the FDA Hearing Clerk's office.

In 1976, FDA invited the Drug Information Association (DIA), an independent nonprofit professional group interested in drug information, to arrange a symposium on patient package inserts for prescription drug products at which a diversity of views could be presented. FDA and DIA were joined by the American Medical Association (AMA) and the Pharmaceutical Manufacturers Association (PMA) as cosponsors of the symposium, which was held in November 1976. The symposium was attended by more than 700 health professionals, consumer representatives, and members of the press, and focused on the issues related to patient package inserts for prescription drug products. The symposium proceedings were published as a special supplement to Volume 11 of the *Drug Information Journal* (January 1977).

FDA continued to solicit public contributions to the patient package inserts program. In December 1978, FDA sponsored a 2-day conference on the content and format of patient package inserts. Approximately 300 participants attended, including pharmaceutical industry representatives, physicians, pharmacists, other health professionals, marketing and advertising representatives, and consumers. The conference was concerned with the information that patient package inserts for prescription drug products should be required to contain and how the information should be presented to benefit people most likely to read it. The proceedings of the conference are on file in the FDA Hearing Clerk's office.

In February 1979, the Institute of Medicine of the National Academy of Sciences, under contract to FDA, sponsored a public hearing to solicit comments on how patient package inserts should be objectively evaluated, once they are used on a widespread basis. A copy of the presentations at that hearing is also on file in the FDA Hearing Clerk's office.

FDA also reviewed the literature on patient information for prescription drug products to determine the extent of current efforts to communicate drug information to patients. A discussion of the agency's literature review appears in the proposal (44 FR 40019-40021; July 6, 1979). FDA's literature review showed that most patients are not exposed to information about prescription drug products. Those that are exposed to oral information are not attentive to it. In addition, health care professionals use language that patients do not understand, and patients are unwilling to ask for clarification. Moreover, even if oral information is provided and patients are attentive to and understand it, they may not accept its validity. Finally, patients often do not remember medical information that is presented orally. Thus, the agency's proposal was based upon its belief that patient

package inserts that are well designed and well written will help overcome the problems that hamper the communication to patients of important information about prescription drug products. Indeed, in 19 studies assessing whether written patient information improves patient knowledge, every one showed significant improvement (Refs. 1 through 19).

In addition, FDA based its proposal on the agency's belief that broad patient support for patient package inserts exists, that the safe and effective use of products requires that the patient be informed about their benefits, risks, and proper uses, and that this information be communicated in a useful form. The proposal also discussed fully patients' failure to use prescription drug products properly (44 FR 40021; July 6, 1979). FDA believes that patient package inserts, by explaining both the importance of taking drug products as directed and the risks of taking them improperly, should reduce the current levels of incorrect drug use by patients.

Summary of Proposed Regulations

FDA proposed patient package inserts requirements under which the manufacturer of a drug product would be responsible for preparing and distributing patient package inserts written in non-technical language. The agency also proposed to make available guideline patient package inserts for use by manufacturers. Adherence to the agency guidelines would constitute compliance with the regulation governing the content of patient package inserts.

Under the proposal, the manufacturer was to ship patient package inserts together with the drug. Ultimately, the dispenser was to give the inserts to the patient whenever a drug subject to the regulations was dispensed. The agency proposed certain alternatives and exemptions from the general requirement to cover situations such as emergency treatment or the patient's legal incompetence. Special rules governing hospitalized patients were also proposed.

The agency proposed to implement the patient package inserts requirements in two phases—a first phase requiring patient package inserts for approximately 50 to 75 drug classes, and after evaluation of the first phase, a second phase to cover most prescription drugs.

The agency recognized that the proposed regulations would have economic costs, as well as benefits. Thus, FDA prepared a draft regulatory analysis of the economic consequences of both the proposed regulations and several alternative means of providing patients with information about prescription drug products. A copy of the draft regulatory analysis was placed on file in the FDA Hearing Clerk's office. FDA estimated that in the fifth year of implementation the total cost of the program would be $90 million.

Public Participation in the Rulemaking Process

In the Federal Register of August 10, 1979 (44 FR 47104), FDA announced three public hearings on the patient package inserts proposal. These hearings were held in Chicago, IL on September 10, 1979, in Los Angeles, CA on September 12, 1979 and in Washington, DC on September 14, 1979. Transcripts of the hearings have been placed on public display in the FDA Hearing Clerk's office.

The proposal asked that written comments on the proposed regulations be submitted to the FDA Hearing Clerk by October 4, 1979. In the Federal Register of October 12, 1979 (44 FR 58918), FDA extended to November 5, 1979, the time for submission of written comments. The agency received approximately 1,500 comments on the proposal. The comments came from trade associations and individual firms involved in the manufacture and distribution of prescription drug products; organizations of health care professionals and individual physicians, pharmacists, and other health care professionals; organized consumer groups and individual consumers, and others.

Most of the comments came from individuals who expressed support for or opposition to the concept of patient labeling, but did not comment on specific aspects of the proposal. Generally, individual consumers favored patient package inserts while individual physicians, pharmacists, and other health care professionals opposed them. Many comments reiterated opinions and views about the general concept of patient package inserts that the agency had heard in public discussions held before the proposal was published and which the agency analyzed in the preamble to the proposed rule (44 FR 40022–40025; July 6, 1979). A summary of the substantive comments on the proposal and the agency's responses appear later in this preamble. Although many of the comments persuaded the agency that it should amend the regulations in some respects, the agency has concluded that patient package inserts requirements should be adopted.

In sum, FDA believes there is ample evidence in the record to support the agency's conclusion that permanent and retainable information for patients about prescription drugs, apart from providing information that patients have a right to have, can significantly improve the quality of health care obtainable from prescription drugs. Improved patient awareness of the need to adhere to dosage regimens, of the need to avoid certain activities, foods, or even other drugs, of adverse reactions, of proper use in pregnancy, all portend improved patient response to drug therapy. Moreover, comprehensive yet preliminary information about possible negative effects of patient package inserts have shown them to be largely imagined. Patients are not generally influenced not to use drugs, nor do they experience unwanted adverse reactions, simply because information about drugs has been brought to their attention. These issues were addressed at length in the preamble to the proposal, and are reviewed here to the extent that they were raised again by comments received.

Overview of the Final Regulations

The final regulations establish general patient package inserts requirements. The agency intends to make them effective for 10 drugs or drug classes during an initial implementation period which the agency now believes will be approximately 3 years.

The regulations require manufacturers and distributors of prescription drug products to provide patient package inserts for prescription drug products to dispensers. Dispensers are then required to provide the package inserts to patients when a drug product subject to the requirements is dispensed. The regulations apply only to new prescriptions, not to refills. Unlike the proposal (which would have required manufacturers and distributors to ship patient package inserts physically with the drug product), the final regulations permit manufacturers and distributors to determine how best to provide the inserts to the person to whom they ship the drug product.

Patient package inserts are required to be written in nontechnical language and to be based primarily on the professional labeling for the product. They may not be promotional in tone or content. They are also required to contain both a summary of information about the drug product and more detailed information that identifies the product and identifies a person responsible for the product, the proper uses of the product, circumstances under which it should not be used, serious adverse reactions, precautions the patients should take when using the

product, information about side effects, and general information about the proper use of prescription drug products. Patient package inserts for a particular drug product need not contain a specific item of required information if the agency determines that the information is unnecessary for patients. The regulations also establish minimum printing specifications for patient package inserts.

Under the regulations, FDA may make available guideline patient package inserts for prescription drug products. Elsewhere in this issue of the Federal Register, the FDA is publishing draft guideline patient package inserts for the 10 drugs or drug classes to which FDA will apply the regulations during the agency's initial program.

In most cases, the patient package inserts are required to be distributed to the patient with the drug product. However, the regulations permit the inserts to be given to the patient's parent or guardian if the patient is legally incompetent. The regulations also permit the dispenser to provide the inserts in the patient's primary language if other than English, or in braille. While providing non-English language patient package inserts is encouraged where appropriate, the dispenser complies with the final regulations by providing them in the English language. The regulations require, however, that manufacturers prepare patient package inserts written in Spanish so that they can provide adequate supplies in Spanish upon request to distributors and dispensers to whom they have shipped the drug. The agency encourages practitioners and dispensers to obtain and provide to their Spanish speaking patients Spanish language patient package inserts.

The agency expects that most patient package inserts will be dispensed by local pharmacists directly to their customers. However, prescription drugs are also frequently provided in other circumstances which the agency believes should be accommodated by different procedures. Accordingly, the final regulations provide special procedures for making patient information available to hospitalized patients, including those admitted for emergency procedures. In addition, the final regulations recognize that some physicians may in a rare case believe that patient information for a given drug is best not provided to a particular patient. Thus, under the regulations, a physician may direct that the dispenser withhold the patient package inserts, and it can be withheld unless the patient specifically requests it.

Limited Implementation of Regulations

A number of comments urged that FDA study further the usefulness and economic soundness of patient package inserts before starting a full scale program requiring patient package inserts for most prescription drugs. Several comments contended that further study was needed because the record did not justify the agency's conclusion that patient package inserts would provide any substantial patient benefits. Several other comments recommended that FDA conduct a pilot program in which patient package inserts would be required for only a few drugs. The results of that program could then be used to evaluate the costs and benefits of a broader program. Other comments suggested that studies in progress at the time of the proposal—in particular the evaluation of patient package inserts by the National Academy of Sciences' Institute of Medicine—be completed before FDA undertakes a broad patient labeling program.

A number of other comments contended that the draft regulatory analysis was deficient in estimating the costs of the proposed regulations. Some comments argued that these deficiencies warranted ending the rulemaking, while others suggested that the deficiencies indicated a need for further studies to assess more accurately the regulations' costs and benefits.

When the proposal was published in July 1979, FDA was expecting to receive a report under an agency contract with the Institute of Medicine (IOM). The agency intended to use the report as a basis for planning its evaluation of patient package inserts. In August 1979, IOM issued its report, "Evaluating Patient Package Inserts." The report assessed the current information about patient labeling, summarized the issues raised for and against it, reviewed existing research and data, and identified and recommended an agenda for future research. Significantly, the IOM report supported the concept of patient package inserts, noting that patients' evaluation of the package inserts have been positive and that little evidence of negative effects has been shown. Nevertheless, IOM concluded that there should be additional research on patient package inserts under actual conditions of use instead of controlled experimental studies.

The Regulatory Analysis Review Group also commented on FDA's proposed patient package inserts program. ("RARG" is a Federal interagency review group created by the President, chaired by the Council of Economic Advisers, staffed by the Council on Wage and Price Stability, and responsible for reviewing regulatory analyses accompanying proposed major regulations.) RARG recommended that FDA limit the scope of the final regulations to a few drugs and use patient package inserts for those drugs as a basis for a pilot program to evaluate the costs and benefits of a broader patient package inserts program. It also urged that FDA commit itself to applying the knowledge gained during the initial implementation of patient package inserts for a few drugs to the expansion of the program to more drugs. RARG recommended that the pilot program explore the merits of alternative distribution systems in addition to FDA's proposed program for providing information about prescription drugs to patients.

The agency has carefully considered the IOM recommendations and RARG's comments, as well as other comments that have urged the agency to proceed incrementally in expanding the patient package inserts program, and has decided to adopt the suggestions that FDA first implement patient package inserts for a small, select number of prescription drugs. Thus, the initial program will implement patient package inserts for 10 drugs or drug classes during an initial implementation period of about three years, and FDA will evaluate the program's results before applying the requirements to additional drugs. The agency will require patient package inserts under these regulations for any other drug during the initial implementation program only if the agency finds that the safe use of a drug necessitates patient labeling.

During this period, FDA will further evaluate the costs and benefits of the requirements. Before applying the requirements to additional drug products or classes, FDA will prepare and publish for public comment a regulatory analysis that applies the information obtained during the initial period to whatever patient labeling requirements the agency intends to implement.

Although FDA believes that there is ample evidence of the value of patient package inserts in helping patients use drug products safely and effectively, the agency agrees that additional studies are needed to confirm the costs of a mandatory, nationwide patient package inserts program, whether those costs are reasonable in terms of the benefits the program provides, and also to verify the best way to convey to consumers information about prescription drug products. The purpose of the initial

program period is to obtain this information on a firsthand basis.

FDA will require patient package inserts for the following 10 drugs or drug classes: ampicillins, benzodiazepines, cimetidine, clofibrate, digoxin, methoxsalen, propoxyphene, phenytoin, thiazides, and warfarin. Elsewhere in this issue of the Federal Register, the agency is publishing draft guideline patient package inserts for those drugs and drug classes and asking for public comments on those guidelines. These drugs and drug classes were selected both because the agency believes that patient package inserts for these products will significantly enhance their safe and effective use and also because the agency believes these drugs and drug classes are appropriate subjects for selection under the criteria stated in the proposal (44 FR 40031; July 6, 1979) for the agency's program to study further the effects of patient package inserts.

Comments on the Proposal

A summary of the substantive comments on the proposal and the agency's responses follow:

1. Several comments contended that FDA lacks the authority to require patient package inserts for prescription drug products. Comments contended that FDA's reliance upon sections 201(n) and 502(a) of the Federal Food, Drug, and Cosmetic Act (the act) as authority for the proposed regulations is misplaced because those provisions were intended to apply only to affirmative statements a manufacturer might choose to make. The comments suggested that any interpretation of those sections to authorize FDA to require patient package inserts for prescription drug products would circumvent the intent of section 503(b)(2) of the act, which expressly exempts prescription drugs from the requirements of section 502(f) of the act relating to adequate directions for use and warnings about drug products.

One comment argued that a decision to require patient package inserts raises policy questions that should be addressed by Congress and not FDA. The comment contended that the act specifically limits the content of the labeling that must accompany a prescription drug to the patient to the directions for use and cautionary statements, if any, contained in the prescription. Thus, the comment argues that the statute expressly provides that the practitioner determine the content and extent of information to be provided to the patient. One comment also contended that the Durham-Humphrey amendment to the act in 1951 and its legislative history show that the content of prescription drug labeling intended for patients is controlled by section 503(b) of the act.

These comments misunderstand the applicable statutory requirements. Sections 502(a) and 201(n) do not apply only to affirmative labeling statements a manufacturer might choose to make. The language of section 201(n), that labeling is misleading if it fails to reveal "facts * * * material with respect to consequences which may result from the use of the article * * * under such conditions as are customary or usual" clearly contemplates that labeling, in order not to be false or misleading, may be required to contain information in addition to that which relates to affirmative statements a manufacturer might wish to make. See, for example, *Pasadena Research Laboratories, Inc.* v. *United States*, 169 F.2d 375, 383 (9th Cir.) cert. den. 335 U.S. 853 (1948); *American Frozen Food Institute* v. *Mathews*, 413 F. Supp. 548, 554 (D.D.C 1976) aff'd 553 F.2d 1059 (D.C. Cir. 1977); *Cosmetic, Toiletry and Fragrance Association* v. *Schmidt*, 409 F. Supp. 57 (D.D.C 1976).

Section 503(b)(2) of the act, even though it exempts prescription drugs from the requirements of section 502(f) of the act, does not prohibit FDA from imposing a requirement under section 502(a) that pharmacists dispense labeling directed to the patient that has been prepared by drug manufacturers and is intended to promote the safe and effective use of drugs. Section 503(b)(2) of the act, enacted as part of the 1951 Durham-Humphrey amendments, was intended to remove for pharmacists certain confusing aspects in the dispensing of prescription drugs that arose from the provisions of the 1938 Federal Food, Drug, and Cosmetic Act. It was not directed in any way toward limiting the government's power to require pharmacists to dispense labeling prepared by the manufacturer that is specifically directed to patients. Indeed, the Durham-Humphrey amendments specifically made labeling dispensed by pharmacists subject to the provisions of section 502(a) of the act and, therefore, section 201(n) of the act, and it is under those provisions that this regulation is based. This interpretation of the act has been upheld with respect to patient labeling for estrogenic drug products in *Pharmaceutical Manufacturers Association* v. *Food and Drug Administration*, 484 F. Supp. 1179 (D. Del. 1980), appeal pending.

FDA disagrees that implementation of its patient package inserts program should await further Congressional action. The FDA believes that existing authority supports issuance of the requirements. Moreover, recent legislative proposals indicate that Congress is aware that these patient package inserts regulations are pending, and demonstrate a Congressional desire that they be placed in effect.

Prescription drugs are by law drugs which may be habit forming, or require professional supervision because of toxicity or other potential for harm. Yet, avoidance of harm, both that which may arise directly from the drug, or that which may arise because of its failure to work properly or even optimally, may oftentimes be wholly contingent upon the patient's proper use of the drug, and his or her ability to recognize a failure of therapy or possibility of harm. Numerous studies document, however, that patients are unaware to a significant extent about the uses, potential side effects, and possible dangers of the drugs they take. For various reasons, patients do not seek to obtain this information from health professionals and frequently forget it even when it is provided. Thus, not only do patients need the information on uses, side effects, proper regimen, etc., that permits effective use, they also need such information to permit safe use of prescription drugs.

General patient package inserts requirements need not be based on a drug-by-drug identification of specific hazards. Rather, general requirements are amply justified by data demonstrating that there is substantial noncompliance by patients with drug therapy, that providing patients with information about drugs increases the degree to which they use them properly, and that existing drug-dispensing mechanisms are not providing the information to patients. Studies demonstrate high rates of patient noncompliance with some drug regimens, from 50 to 80 percent, and consistent noncompliance rates of 30 to 50 percent for a wide range of drugs (44 FR 40021). Data show as well that patient knowledge about drugs improves compliance. Id. The agency's patient package inserts requirement is intended to provide patients with the types of information that will improve their use of drugs. Information on common uses, a drug's proper use, contraindications, adverse effects, and safety hazards is basic to proper drug use, and includes information that patients themselves thought most important (44 FR 40022). Other information that is required reasonably supplements information on drug use so as to provide patients, in total, with comprehensive, yet reasonably short, statements about the drugs they use.

While data show that patient use of prescription drugs would be improved with patient information, studies also show that patients are not exposed to drug information. A great percentage of patients have been shown not to receive drug information from physicians; an even greater number fail to receive it from pharmacists. Moreover, even when provided orally, and understood (although it often is not understood), it is not remembered. Id. These factors justify FDA's conclusion that the failure to provide patients with written information on prescription drugs is a failure to provide them with "facts * * * material with respect to consequences which may result from the use" of those drugs, and justifies, therefore, a requirement that written information for prescription drugs be provided to patients.

The regulations meet the requirements of the law not only because they require that certain information essential to safe and effective use be provided, but also because they permit that information to be organized and emphasized on a drug-by-drug basis to highlight particular problems and to stress important information. Thus, as evidenced in the FDA-prepared patient package inserts guideline for ampicillin, the agency has stressed adherence to dosage regimen rather than the drug's adverse effects because patients taking antibiotics may feel better, and stop taking the drug before it is proper to do so. Similarly, in the case of benzodiazepines, emphasis is again given to particular problems, such as dependence and overuse, which are not necessarily emphasized with respect to other drugs. The regulations are designed, and FDA's guideline package inserts specifically account for, the fact that "straightjacketed" content information with respect to drugs may be counterproductive. In short, the regulations provide for emphasis to be given to that information which is most material to the safe and effective use of a particular prescription drug.

2. One comment argued that FDA failed to identify and to articulate clearly the objectives of its proposed program and that that failure impedes a determination of the program's potential beneficial effects. The comment identified the following possible objectives of a patient package inserts program: (1) To induce physicians to prescribe drugs more rationally, (2) to provide patients with the information they have a right to know about prescription drugs, (3) to encourage and motivate patients to comply with their drug therapy program, or (4) all of the above. The comment suggested that these objectives may be mutually contradictory for a particular drug product, but one of these objectives may justify patient package inserts for a particular product depending upon the nature of the product and the condition or disease it is intended to treat. The comment added that FDA had failed both to state its objectives for the program and to identify the objective of patient package inserts for particular drug products.

Patient package inserts are intended both to provide patients with information about prescription drug products that will promote their safe and effective use and to provide patients with adequate and meaningful information sufficient for them to participate in evaluating the benefits, risks, and proper use of prescription drug products. The agency does not believe the two objectives are necessarily contradictory, but it recognizes that one or the other objective may properly be emphasized in the patient package inserts for a particular product. For example, patient package inserts for a product that is essentially elective might emphasize risks from use of the drug so patients can make an informed decision about taking it. On the other hand, patient package inserts for another product might emphasize the importance of patient compliance with the prescribed therapy. The final regulations have been modified to more clearly permit the intended flexibility. Persons preparing patient package inserts for a particular drug are free to stress certain information pertinent to that drug, and to format the inserts to achieve the desired emphasis.

Although the agency recognizes patient package inserts may affect prescribing habits, that is not among the primary intended effects the agency seeks from patient package inserts.

3. Several comments suggested that the only support for a patient package inserts program comes from a small group of special interest activists and, thus, no real need for the program exists. Comments contended that, although FDA surveys show that patients who had received patient package inserts for oral contraceptives favored patient package inserts for other drugs, the surveys do not show that consumers are willing to pay for this information through increased prescription drug prices. One comment suggested that before issuing a final regulation FDA should conduct a thorough study to determine consumer attitudes towards patient package inserts and whether consumers believe their benefits would justify their costs.

Although support for patient package inserts has been expressed most forcefully by consumer activists, the agency's surveys of consumers, including those who have not been exposed to patient package inserts, confirm that consumer activists' views accurately reflect broad support for them. Agency experience also suggests that consumers are willing to absorb some increased costs as a result of patient package inserts. For example, on April 1, 1980, the Commissioner of Food and Drugs appeared on a show on QUBE television in Columbus, Ohio. The show allowed viewers to signal their responses to questions that appeared on the television screen by means of a small box attached to their television sets. The responses from viewers are immediately tabulated. There were two airings of the television show (at noon and at 7 p.m.) at which time television viewers answered a series of questions about patient package inserts. A copy of the questions and responses are on file in the FDA Hearing Clerk's office. Some highlights of this survey are: Sixty-nine percent of the noon and 57 percent of the evening viewers said they were willing to pay an extra 30 cents a prescription to receive patient package inserts. Of those not willing to pay 30 cents, 69 percent of the noon and 64 percent of the evening viewers said they were willing to pay an extra 10 cents. Sixty-seven percent of the noon viewers and 59 percent of the evening viewers wanted patient package inserts delivered with the prescription (only 8 to 9 percent requested a reference book at the pharmacy). About 39 to 40 percent wanted patient package inserts for all drugs and 33 to 34 percent wanted inserts for those drugs selected by FDA. Only twenty-three percent of the noon viewers and 19 percent of the evening viewers wanted patient package inserts made available only when they requested it. While this television survey does not represent a statistical cross-section of the entire population, it reaffirms other data that patients both want, and are willing to pay for, patient labeling.

4. Several comments contended that health care professionals recognize patients' rights to information about prescription drugs, are sensitive to patients' needs for information, and have already taken action adequate to resolve the problem. Although one comment recognized that some health care professionals do not provide adequate drug information to patients, the comment noted that professional

schools have recently emphasized the responsibility of their graduates to provide drug use information to patients and, thus, health care professionals can be relied upon to provide this information to patients. Another comment suggested that FDA should work with health care professionals to encourage voluntary and individualized patient education activities. Several comments suggested that patient package inserts would replace other current sources of prescription drug information for patients, thus denying patients information at the time the drug is prescribed and providing it only at the time the drug is dispensed and in a form patients may find less useful than a discussion with the dispenser.

FDA has continuously recognized the very important role that health care professionals, particularly physicians, nurses, and pharmacists, play in providing information to patients about prescription drug products. FDA has repeatedly emphasized that patient package inserts are not intended to supersede the important individualized instruction that health care professionals are able to provide patients but, instead, is intended to supplement individualized instruction, in part by promoting a dialogue between health care professionals and patients. There is nothing in FDA's program that is intended, much less that has been shown, to impede such a dialogue. The agency believes that written prescription drug information of the type FDA is requiring will improve communication of important information to patients, will successfully augment the information provided orally by health care professionals, will help patients remember the information and, finally, will likely promote communication between health care professionals and patients.

At the same time, while fully aware of the valuable contribution made by many health professionals, the agency recognizes that in many cases health care professionals fail to provide important information about prescription drugs to patients. Moreover, although comments indicate that there is increased concern on the part of the professions for providing consumers with drug information, there is little to indicate that those programs are having any substantial effect on the quality of information reaching the patient. Several studies cited in the preamble to the proposal show that health care professionals simply do not provide information to patients about prescription drug products (44 FR 40020; July 6, 1979). To supplement these studies, FDA recently conducted a telephone survey of consumers about drug information they received the last time a prescription was filled. About half the consumers in the study stated that the practitioner gave them instructions about use of the drug and disclosed the purpose of the drug; only about one-fourth stated that the pharmacist told them something about the drug. The consumers said that even when information was provided, side effects and precautionary information were rarely mentioned. A copy of this study has been placed on public display in the FDA Hearing Clerk's office.

Another agency study suggests that a significant number of pharmacists do not counsel patients about the prescription products they purchase. FDA employees (who did not identify themselves as being from FDA) visited 271 randomly selected pharmacies in 20 cities to fill prescriptions for estrogenic drugs, for which patient labeling is now required by FDA regulation (21 CFR 310.515). Only 39 percent of the pharmacies spontaneously dispensed patient labeling to the person who presented the prescription and only 28 percent orally counseled the individual. Moreover, because the agency employees asked for patient labeling if it was not delivered spontaneously, it is unclear if the counseling was spontaneous or due to patient initiated questioning. A copy of this study has been placed on public display in the FDA Hearing Clerk's office.

5. Many comments recommended alternative ways of providing patients with information about prescription drugs. Comments suggested the following alternatives to FDA's proposed patient package inserts requirements: Booklets for patients containing general information about prescription drug use; booklets for patients about specific diseases, injuries, or other conditions; less extensive general instructions for patients about use of particular drugs (for example, instructions about whether to take the drug with or before meals), with space for physicians to add individualized information or warnings; and compilations of patient information in pharmacies about most commonly prescribed or other important prescription drug products. One comment suggested that a paperback booklet of patient labeling be placed on sale at pharmacies for patients interested in further information about prescription drugs. A comment suggested that in place of patient package inserts, pharmacists should be required to provide patients with a written statement that the patient can obtain information orally from the pharmacist about prescribed drugs. Comments suggested that FDA require practitioners or dispensers to counsel patients about prescription drug products. Other comments suggested that dispensers be required to make available a book of patient labeling that patients could review when a product is prescribed or dispensed.

The agency now believes that the alternatives suggested are unlikely to meet the needs of patients for prescription drug information. Currently available books about prescription drugs are relatively costly. In addition, labeling information for individual drugs is likely to change over time, requiring the patient to purchase a revised book. Although both reference books available when the drug is dispensed and oral counseling would provide information to the patient, both would also make it difficult for the patient to review the information during the course of therapy. Moreover, the patient is unlikely to remember all of the important information he or she reads in the reference book or obtains from the practitioner or dispenser. Also, many patients do not have their prescriptions filled themselves, but rely upon others to obtain the prescribed drug at the pharmacy, a practice that clearly reduces the patient's exposure to the health professional, and compromises the quality of the information that would result from a face-to-face exchange. Finally, it is impossible to assume that patients who generally are unfamiliar with prescription drugs will, when a drug product is dispensed, initiate a discussion to obtain all of the information they may subsequently need for the safe and effective use of the product.

For these reasons, FDA believes that alternative distribution systems for drug specific information have not yet been shown to be adequate. Nevertheless, during the agency's initial program, FDA intends to permit studies of alternative distribution systems for information about the 10 drugs or drug classes that will be subject to the regulations. A new provision has been added to the regulations, § 203.35 (21 CFR 203.35), which establishes procedures by which manufacturers, distributors, and dispensers may substitute, with FDA approval, alternative dispensing procedures (and the corresponding distribution practices) for those specified in the regulations.

In addition, FDA will welcome studies of voluntary programs for provision of patient information for drugs or drug

classes other than the 10 subject to the regulations. FDA officials are willing to consult with those planning such studies.

6. Comments suggested that sticker labels placed directly on the container dispensed to patients, which are used now by many dispensers, provide adequate information for patients to use prescription drug products properly.

Although the agency believes that sticker labels are important reminders to patients about certain limited aspects of the proper use of prescription drug products, they lack the comprehensiveness of patient package inserts. For example, sticker labels often do not provide enough information to patients for them to monitor and react to adverse reactions that may occur from the use of the drug product. Thus, the agency believes that sticker labels can be useful adjuncts to, but not replacements for, patient package inserts.

7. Some comments suggested that dispensers should be required to provide the patient with the currently available professional labeling for the drug product. According to the comment, providing patients with professional labeling would eliminate the development, production, and review costs of preparing specific patient labeling.

Providing patients with professional labeling rather than patient package inserts would not fulfill the needs of most patients for understandable information about prescription drug products. Although the agency encourages dispensers to provide a drug product's professional labeling to patients who request it, that labeling is too technical for most patients to understand. Thus, the agency believes patient package inserts written in nontechnical language and directed specifically to the patient are more likely to provide the patient with information he or she can rely upon to use the drug product properly. Finally, as reflected in the agency's regulatory analysis, little of the cost of a patient package inserts program is attributable directly to the development of the text of the insert. Thus, the distribution of professional labeling would likely reduce by only a very small amount the overall cost of the program.

8. Comments suggested that FDA can meet its objectives for patient labeling by requiring dispensers to use the United States Pharmacopeia Dispensing Information (U.S.P. DI), a book which contains dispensing information about several thousand drug dosage forms. Other comments expressed the view that the U.S.P. approach for devising patient drug information is superior to that proposed by FDA in that it sets forth a broadly based, coordinated system of widely reviewed written and oral information for patients. A comment noted that national distribution and use of the U.S.P. DI and spinoffs from it are already underway and observed that the U.S.P. program permits the dissemination of drug information in a number of different ways. The comment envisioned that in the short-term, pharmacies and hospitals will purchase and make available to patients copies of the U.S.P. DI and that eventually pharmacies, physicians, and dispensers will photocopy or order printed materials based on the U.S.P. DI texts in the form of leaflets and pads which will then be distributed to individual patients. The comment said that it would be arbitrary and capricious to adopt the agency proposal in the absence of a demonstration that FDA had considered the U.S.P. alternative. The comment stated that FDA should not establish patient package inserts regulations to implement another program until experience with the U.S.P. DI is obtained and evaluated. Finally, the comment offered the opinion that the U.S.P. is the best organization to provide patient information because its expertise lies in developing drug information that is reviewed by hundreds of professionals around the country.

The agency recognizes the expertise and resources of the U.S.P. Indeed, FDA has met on several occasions in the past few years with the U.S.P., and with other private developers of patient information about prescription drugs. Each of these groups has asked FDA to approve its program for providing prescription drug information to patients. The agency does not, however, believe that any private organization should be designated as the sole official source of drug information for patients. Moreover, FDA has reviewed the content and methods of distribution of patient information systems including the U.S.P. DI, and believes that none of them is now an acceptable alternative to its program. Some of them leave out important warnings, while others state that drugs are used in ways not stated in the drug's official labeling. Moreover, there is evidence that very little of the information in these systems actually reaches patients. Thus, the agency has concluded that the program implemented by this final rule will offer benefits measurably greater than available alternatives.

As noted, however, FDA hopes to receive requests from private organizations, including the U.S.P., to implement alternative dispensing schemes.

9. One comment suggested that FDA augment its patient package inserts program with a public awareness campaign to inform consumers that patient package inserts are available. Another comment suggested that FDA require pharmacies to post signs informing patients that they have the right to request inserts for any prescriptions drug. The comment recommended that such signs should state that patients can review the inserts and that the patient may obtain them notwithstanding a direction in the prescription by the practitioner that the patient not be given any written information. A comment also suggested that FDA sponsor a program to make health care professionals aware of the importance of providing information about prescription drugs to patients.

The agency believes that FDA- and privately-sponsored information campaigns about patient package inserts are desirable and in implementing later phases of the program will consider how best to inform the public about the availability of patient package inserts for drugs subject to the program. At present, however, FDA believes it would be premature to develop broad-based promotional campaigns or to require the posting of signs. The final regulations are structured so that patients will receive patient package inserts for the 10 drugs or drug classes without asking for them, and the evaluation program should yield data about whether there is a need to remind patients of their right to obtain them.

10. Several comments complained that FDA has given inadequate attention to the potential effects of the patient package inserts regulations on the civil tort liability of manufacturers, distributors, and dispensers of prescription drug products. One comment noted that the manufacturer of a prescription drug product is now often exempt from strict liability for injuries to a consumer of the product if the product is properly prepared and labeled for professionals. The comment suggested that these patient package inserts requirements will deprive manufacturers of this exemption and, thus, significantly increase their liability exposure. The comment contended that, despite FDA's analysis in the proposal, patient package inserts regulations would create a duty for manufacturers to warn patients, a new duty which is not, as FDA suggested, in keeping with

traditional notions of legal responsibility. Thus, to establish patient package inserts requirements that do not increase the tort liability of drug manufacturers, the comment contended that FDA should require manufacturers to distribute patient package inserts that exactly reproduce a text written by FDA and which FDA finds is adequate to warn patients about the use of the drug product. Another comment suggested that manufacturers would seek to reduce their potential liability exposure by producing very detailed and unbalanced inserts.

The agency has considered the potential effects of the patient package inserts regulations on the civil tort liability of manufacturers, distributors, and dispensers of prescription drug products, and concludes that the commenter's fears about potential increases in liability are exaggerated. No evidence has been presented that patient labeling currently required by FDA regulation has caused a noticeable change in tort rules affecting civil liability. In addition, as stated in the preamble to the proposal (44 FR 40023; July 6, 1979), the agency believes that to the extent that patient package inserts promote the safe and effective use of prescription drugs it is equally likely that patient package inserts will result in reduced potential liability. While the agency is not unconcerned about the effects of patient package inserts on civil tort liability of manufacturers, distributors, and dispensers, it has not been persuaded that the potential effects of the patient package inserts program on their civil liability should be dispositive of whether the agency should establish patient package inserts requirements.

11. Several comments argued that the agency should evaluate its patient package inserts program under the standards for safety and effectiveness that the agency applies to new drugs under section 505 of the act. The comments contended that the agency should not establish final requirements until it has demonstrated through adequate and well-controlled investigations, including clinical investigations, that patient package inserts will not harm patients and that they will have their intended effects.

The statutory standards for determining whether a drug is safe and effective are not applicable to an evaluation of patient package inserts. As noted, however, the agency does intend to conduct a careful evaluation of the initial implementation program.

Definitions

12. Comments asked that the acts of dispensing and administering a drug be clarified.

The definition of the term "dispense" in the regulations includes both the act of giving a quantity of a drug product to the patient, or to the patient's agent, for that patient to self-administer (for example, a 10-day supply of tablets or capsules), and the act of administering the drug directly to the patient (for example, a single injection administered by a health care professional).

13. One comment suggested that the agency adopt the term "prescriber" instead of the term "practitioner" to identify an individual who prescribes drug products, because the term practitioner might be understood to apply to health care professionals who do not prescribe drug products. The comment also suggested that the agency adopt the phrase "professional labeling" instead of the phrase "practitioner labeling" to refer to the labeling currently required under § 201.100 for prescription drugs. The comment contended that the use of the term practitioner labeling suggested that the labeling was intended only for prescribers of drug products although the labeling is intended for, and used by, other health care professionals.

The agency does not believe the term "practitioner" which is defined in the regulations, will be misunderstood. As noted in the proposal, the term is that used in proposed legislation now before Congress. The agency has, however, adopted the term "professional labeling" to refer to the labeling currently required for prescription drugs under § 201.100(d) (21 CFR 201.100(d)).

Content of Patient Package Inserts

14. One comment objected to the requirements in § 203.20(a)(1) that patient package inserts be written in nontechnical language and be nonpromotional in tone or content. One comment contended that the phrase "nontechnical language" must be precisely defined and that certain scientific and medical terms may have to be used in patient package inserts although they are considered to be technical. Another comment asked whether FDA considers an illustration of the drug product in the labeling to be promotional.

Because the use of some technical terms in patient package inserts may be unavoidable, the agency concludes that the occasional use of technical terms, where justified, will comply with the requirement. When the use of technical terms is unavoidable, however, manufacturers are urged to use definitions, examples, or illustrations. The agency will not consider the inclusion in the inserts of an illustration of the drug product to be promotional, and it encourages manufacturers to use illustrations to help patients match the patient package inserts with the drug product.

15. One comment asked whether patient package inserts, which are required under § 201.20(a)(2) to be based on the professional labeling for the drug product required under § 201.100(d) (21 CFR 201.100(d)), would also be required to be revised each time the professional labeling is revised. Another comment urged that the approval of a new drug product should not be delayed by the development of patient package inserts for the product.

The agency advises that a change in the professional labeling of a drug product would require that the patient package inserts be revised if the unrevised patient package inserts could no longer be considered to be based upon the professional labeling.

The agency does not believe that the development of patient package inserts for a new drug would delay its approval. Because patient package inserts are required to be based upon the product's professional labeling, patient package inserts can be developed when the professional labeling is developed, and the agency will review them concurrently. The agency notes that § 203.30(c) provides that patient package inserts may ordinarily be put into use without advance approval by FDA.

16. Some comments stated that information about a prescribed drug product should be directed at each patient individually and, thus, standardized patient package inserts are inappropriate. Other comments suggested providing space on the patient package inserts for the practitioner or pharmacist to personalize the inserts. One comment suggested the use of a "fill in the blank" leaflet that could be personalized by the practitioner or pharmacist.

The agency agrees that patients should be given individualized information about both their condition and their prescribed drugs, but believes that individualized information can best be provided by the patient's practitioner, pharmacist, or other health care professional. Patient package inserts are not intended to be a substitute for the information provided by the patient's physician or pharmacist nor do they preclude them from informing the patient about the drug. Instead, their purpose is to supplement that instruction, a purpose that the agency

believes can be fulfilled by inserts containing standardized information about drugs.

17a. One comment interpreted the proposed regulations as stipulating a particular presentation, and suggested that would result in patient package inserts written in a manner and style indistinguishable from professional labeling. Another comment suggested that the headings required in patient package inserts should be the same as the section headings required for professional labeling under § 201.57 (21 CFR 201.57). The comment suggested that the use of the same headings in both professional and patient package inserts would help patients use and understand the more detailed professional labeling.

The agency believes that patient package inserts should be designed to provide patients with information about prescription drugs independent of other materials, including professional labeling. Although the use of the same section headings and format in both professional and patient package inserts may benefit those patients who review the professional labeling, and may help practitioners locate information in patient package inserts, it may also result in patient package inserts that are more technical than are necessary, and thus less useful to patients. Parroting the format of professional labeling would also restrict the ability of manufacturers to create inserts that are more attractive to patients and more readable. Accordingly, the agency is not persuaded that it should require professional and patient package inserts to share the same format and section headings. Nevertheless, the agency has revised the requirements in § 203.20 for the content of patient package inserts to more closely parallel the requirements in § 201.57 (21 CFR 201.57) on the content of professional labeling to help manufacturers ensure that the inserts are based on the drug's professional labeling. For example, the agency has now grouped under the heading "cautions" requirements concerning drug interactions, use in pregnant or nursing women, children, and the elderly, and the drug's carcinogenic potential, information that is required to appear under the heading "precautions" in professional labeling (21 CFR 201.57(f)).

17b. One comment urged that the regulation require that patient package inserts be standardized in format and content. The comment suggested that to permit manufacturers to adopt various type sizes, type faces, colors, papers, graphics, and other features for patient package inserts would confuse the patient. Moreover, the comment argued that a standard format and content would eliminate the possibility that patient package inserts could be used promotionally. One comment suggested FDA simply require that patient package inserts be a word-for-word reproduction of the FDA-prepared guideline.

FDA advises that it has deliberately established performance rather than design requirements for patient package inserts so that manufacturers, distributors, and dispensers may utilize their own knowledge and experience in designing the inserts, and can compete on the basis of their success in achieving presentations desirable to patients, pharmacists, and practitioners. All that is required is that the patient package inserts comply with the objectives set forth in the underlying regulations. As an aid to small businesses and others who lack resources to or prefer not to design their own patient package inserts, FDA will provide guidelines for the 10 drugs and drug classes to which the initial program applies.

Persons who copy these guidelines and fill in a few specific items of information can be assured that their inserts comply with the final regulations. However, requiring the adoption of the precise wording of FDA guideline would deter others from developing patient package inserts that may be as satisfactory, if not more so, than the FDA-prepared inserts. Moreover, requiring precise wording or formatting through regulations would mean that any revision would require new rulemaking, delaying the incorporation of new important information or better methods of presentation.

18. Several comments objected to the requirement that patient package inserts contain a summary of the product's major indications, contraindications, serious adverse reactions, and potential safety hazards, and urged that the terms be defined. Another comment suggested that the summary minimizes the importance of the patient complying with the drug treatment program, because it does not contain information about the importance of that goal of patient package inserts. One comment urged that information about the effects of the drug on pregnant women and infants should be placed in the summary. One comment stated that it is important that the summary be comprehensible to a large number of people with poor reading skills. A comment suggested that the summary would allow patients to ignore the detailed patient package inserts information. Another comment believed the requirement of a summary in addition to detailed information in patient package inserts would increase the likelihood that more patients would get at least a minimal amount of essential information about the drug product.

The agency believes that the advantages offered by the summary outweigh the potential disadvantages the comments see in the use of a summary. The summary should be especially useful to patients who may be unwilling to read the more detailed information. Patients who read both will benefit from the emphasis given to important information. The requirement provides for flexibility in the content of the summary. Thus, any information about a drug within the general requirements can be emphasized if that information is particularly important for patients.

The language of the final regulation has been modified slightly. The words "common uses" and "when it should not be used" have been substituted for references to indications and contraindications to better reflect that it is a summary that is required. In addition, the agency believes the summary is the proper place to advise patients to read the leaflet and to keep it for future use, and has modified the summary provision accordingly.

19. Several comments urged that the proposed requirement that a dispenser put its name on patient package inserts if the dispenser's name and place of business appears on the drug container label, be deleted. Other comments contended that if under the proposed requirement chain drug stores are required to individualize the inserts for each store belonging to the chain, they could not prepare and distribute generic forms. Thus, a chain drug store with a large number of pharmacies would have to prepare individual inserts for each pharmacy.

The agency advises that the dispenser's name may be used, but its use is not necessary to comply with this requirement. The agency also advises that a chain drug store may comply with this requirement by using a single name and place of business (for example, its corporate headquarters) for all stores in the chain.

20. Comments objected to the requirement that patient package inserts contain a statement about the proper use of the drug product, including its actions and indications, suggesting that such a statement would interfere with the practitioner's judgment about the proper use of the drug product for a particular patient. The comments contended that if a patient has a

question about the drug's action the patient can ask the practitioner about the drug. One comment objected to the inclusion in patient package inserts of any information about indications.

The agency believes patients who are informed about the proper use of a drug product are more likely to use a drug product correctly than are patients who are uninformed. If a drug is intended for relief of a symptom of the patient's condition, the patient will know to take the drug when the symptom occurs. If the patient knows his or her condition is asymptomatic, for example, high blood pressure, the patient will know to take the drug even if he or she is experiencing no apparent problem. The language of the provision has been revised for clarity to reflect that the statement of proper uses is to identify the drug's indications and either a summary of its action or the reason for taking it.

21. A comment asked whether a practitioner could prescribe a drug for an indication not contained in the patient package inserts. Another comment urged that patient package inserts be required to contain a statement that "There may be other indications not yet evaluated by the Food and Drug Administration for this drug." The commenter believed that such a statement would free physicians to use the drug for unapproved indications for which there is scientific evidence of safety and effectiveness and would prompt manufacturers to submit data and information to support labeling changes. Another comment complained that if FDA were to permit a statement that the drug may be prescribed for a use not stated in the labeling it would encourage the unapproved use of prescription drugs.

Several comments urged that patient package inserts not include any information that is not also included in the professional labeling for a drug product. One comment suggested that to require inclusion of such information would permit the Government to use patient package inserts as a vehicle to promote its views about proper drug prescribing.

FDA recognizes that prescription drug labeling, including both professional and patient package inserts, does not always contain the most current information available to practitioners about the proper use of a drug. Because advances in medical knowledge and practice inevitably precede formal changes in prescription drug labeling, good medical practice and patient welfare require that practitioners remain free to use prescription drugs according to their best knowledge and judgment. The Federal Food, Drug, and Cosmetic Act does not prohibit practitioners from prescribing a drug product for a particular patient for an indication not contained in its labeling. The regulations do not depart from the statutory scheme. Moreover, patient package inserts under these final regulations may not need to identify all indications for which a drug product is legally marketed. Thus, the agency agrees that a statement in patient package inserts is appropriate to inform the patient that the practitioner may have prescribed the drug product for a condition not stated in the professional labeling. Nevertheless, the agency believes that the statement suggested by the comment, which refers to indications "not yet evaluated" by FDA, improperly suggests that FDA may be evaluating, or would evaluate the drug in the future, for the indication for which it was prescribed, and accordingly the agency believes that statement is misleading. The agency believes that the following statement, which the agency intends to use in some of its guideline patient package inserts texts, responds to the concerns of the comments: "This drug may be used for other conditions as determined by your doctor." The final regulation has been amended to provide for its use. The statement should not be used, however, if a drug has no significant use outside of the indications identified in the patient package inserts.

The agency notes that patient package inserts are not intended to serve as a vehicle for the Government to present to patients its views of proper drug prescribing practices. Although FDA will prepare and provide guideline patient package inserts that manufacturers, distributors, and dispensers may use to comply with the regulations, those persons are free to prepare their own patient package inserts in compliance with the regulations.

22. Comments suggested that both the provision that would require a statement about the lack of evidence of effectiveness of the drug for an indication, and the provision that would require specific warnings related to a use not included in the professional labeling, represent agency attempts to regulate the practice of medicine.

Because patient package inserts are intended to advise patients about potential hazards of a drug and convey information about its safe and effective use, FDA believes that there is no legitimate basis for limiting them to hazards arising from the approved use of a drug, particularly when there is evidence that dangerous unapproved uses exist. For example, the FDA draft guideline for ampicillin, published elsewhere in this issue of the Federal Register, contains a statement that the drug should not be used to treat the common cold, an indication for which many patients believe it is effective. In addition, the currently required patient labeling for progestational drug products warns patients about the products' potential for causing birth defects if administered to a pregnant woman as a diagnostic test for pregnancy, even though such use is unapproved. The disclosure requirement is neither intended or likely to interfere with the practice of medicine.

23. One comment suggested that warning statements should only be required for elective drug products because the practitioner is responsible for evaluating the risks from nonelective drug products. Comments urged that a statement of the serious adverse reactions and potential safety hazards concerning the use of the drug not be included in patient package inserts because that information would be confusing and incomprehensible, and might frighten patients, thus promoting noncompliance with prescribed drug treatment programs.

FDA does not agree that information about serious adverse reactions and safety hazards should only be required for so-called "elective" drug products. The agency is confident that most patients can participate in the evaluation of the risks and benefits from drug products even when the use is not elective, and has revised the requirement to state specifically that patient package inserts must advise the patient of those adverse reactions and safety hazards that may help the patient evaluate the benefits and risks of the drug. There is no reason to believe that warning information about nonelective products will be any more or less confusing, frightening, or incomprehensible than similar statements about any elective drug. A patient who is informed about the potential adverse effects of a drug product is better able to monitor his or her reactions to the product and to take appropriate action if an adverse effect occurs.

The agency also does not agree that information about serious adverse reactions and potential safety hazards in patient package inserts would lead to greater patient noncompliance with drug treatment programs. As described more fully in the preamble to the proposal (44 FR 40021; July 6, 1979), rates of patient noncompliance with drug treatment programs are already high, and based on an FDA study the agency believes that

patient package inserts can reasonably be expected to lower them. FDA's research on patient labeling for thiazide drug products (for which patient compliance with the treatment program is very important) suggests that patients can be informed about a drug's side effects without being frightened into noncompliance. A copy of a paper describing this study has been placed on file in the FDA Hearing Clerk's office. The requirements for information on contraindications and adverse reactions and safety hazards have been reorganized slightly in the final rule on the basis of FDA's efforts to prepare patient package inserts guidelines. They are now described as information the patient should make known to the physician.

24. One comment suggested that the proposed requirement for a statement identifying activities, drugs, foods, or other substances that the patient should avoid while taking the drug is so broad that it would require the patient package inserts to include all possible activities, drugs, foods, or other substances that could conceivably interact with the drug. Another comment suggested that patient package inserts identify inactive ingredients in the drug product for the benefit of persons who may be allergic to them.

The agency agrees that patient package inserts should only describe those interactions that are known, likely to occur, and likely to have clinical significance. The agency has revised the regulations to reflect this interpretation.

The agency does not believe that patient package inserts should, as a general rule, identify inactive ingredients in drug products. In many cases, little or no data are available on the precise action of inactive prescription drug ingredients. In addition, the use of generic patient package inserts, which may be written by persons other than the manufacturer of the drug product to which it applies, may make it impossible to identify all inactive ingredients in drugs that might be dispensed with the insert. Accordingly, the agency concludes that a general requirement that inactive ingredients be identified in patient package inserts is impracticable. Nevertheless, as information becomes available to the agency showing a relationship between a particular inactive ingredient and a potential hazard to patients, FDA will take appropriate steps either to require inserts to contain information about the hazard or to prohibit the ingredient's use in prescription drugs. The agency has previously required disclosure of the presence of FD&C Yellow #5, a color additive known to cause allergic reactions in some persons. (See the Federal Register of June 26, 1979 (44 FR 37212).)

25. One comment suggested that a discussion of the risks to an unborn child from the use of a drug during pregnancy is unnecessary in patient package inserts for a product that is contraindicated during pregnancy. Another comment suggested that this information should be required for patient package inserts for all drug products including those for which there are no effects on reproduction, pregnant women, or nursing infants, in which case the inserts could state that there is no known effect. One comment suggested that information about the effects of the drug on reproduction, pregnant women, and nursing infants should be required to be isolated and emphasized. Another comment suggested that statements in patient package inserts about pregnancy and lactation should include standardized symbols that could be used by non-English speaking or semi-literate patients, or both. The comment noted that the symbols could also be incorporated into other educational materials.

The agency believes that a discussion of the risks to the unborn from the use of a drug that is contraindicated in pregnant patients may often be useful in patient package inserts. For example, the drug may be prescribed soon after the patient becomes pregnant and before the practitioner, dispenser, and patient are aware of the pregnancy. Moreover, the patient may become pregnant after the drug is initially prescribed, and may subsequently need the information. The final rule has been revised, however, to require a statement that the effects of the drug on an unborn child are unknown if data on both immediate and long-term effects are unavailable. The proposed requirement, which dealt with only long-term effects, is viewed as incomplete.

For purposes of clarity, the provisions concerning risks to the unborn child have been combined in the final rule with those regarding the recognized use of a drug during labor or delivery. Finally, although the agency encourages experimentation in patient package inserts with the use of symbols and other illustrations in addition to the required language, it is not prepared to require use of symbols in place of words.

26. One comment contended that the use of the term "discussion" in § 203.20 suggests that a lengthly dissertation is required. The commenter recommended that the term "statement" be used throughout the regulations or that the difference between "statement" and "discussion" be defined.

"Statement" and "discussion" were intended to be synonymous. To clarify this intent, the agency has used the term "statement" throughout the final regulations.

27. Comments suggested that information about whether a drug is carcinogenic, mutagenic, or affects reproduction should only be required if such effects have been shown to occur in humans. The comments suggested that patients would not be able to evaluate the significance of animal data on human use of a drug.

The agency believes that animal data can provide a basis for statements in patient package inserts. Patients may find the information useful, particularly in the case of elective drugs for which alternative treatments are available. The agency advises, however, that actual references to animal data are not required; the requirement can be satisfied by a statement solely of the information about carcinogenicity, mutagenicity, or reproductive effects, and need not attribute the conclusions to animal data. The agency agrees that patients may be unable to evaluate the significance of animal data given alone. Thus, statements in patient package inserts that specifically refer to animal data should also explain to the patient the significance of the data to the patient's use of the drug. The final rule has been amended accordingly.

28. One comment objected to the requirement for listing frequently occurring side effects because it might result in a very long list for certain products. Another comment objected to the requirement limiting the statement of side effects to those that are frequently occurring.

The agency does not agree that a large number of side effects from the use of a drug should be a basis for omitting that information from the inserts, nor does the agency agree that a list of all side effects is needed. Each patient is entitled to the benefit of information on significant side effects. The list is sufficiently limited in its breadth as it need only include those side effects which are clinically significant, frequently occurring and which the patient can reasonably be expected to detect. Information about these side effects might also help the patient evaluate the benefits and risks of the treatment. The final regulation has been amended to specify the kinds of side effects that should be listed in patient package inserts.

29. One comment suggested that the statement of what the patient should do in the case of drug overdosage or if the patient misses a scheduled dose of the drug should be limited to those measures which may be properly implemented by a lay person.

The agency agrees, but believes that the proposed language is consistent with the comment's interpretation and, thus, no change in the requirement is warranted.

30. Comments contended that FDA should not require that patient package inserts state that the patient may obtain a copy of the product's professional labeling from the practitioner or dispenser. The comments noted that manufacturers usually provide only one copy of the professional labeling in shipments of their products. The comment claimed that a dispenser could not legally provide a patient with the professional labeling if doing so would leave the dispenser's remaining product without professional labeling. Several comments also claimed that pharmacists will be unable to comply with all patients' requests for this labeling because of the limited number of copies available to pharmacists. Comments contended that pharmacists need the professional labeling daily to advise patients and consult with other health care professionals. A comment claimed that it is unclear whether a pharmacist's refusal to provide the professional labeling at the patient's request would violate the regulations.

The agency recognizes that dispensers generally have few copies of the professional labeling of a drug product and thus it is unlikely that the dispenser would have adequate supplies to provide each patient with an individual copy. The agency also recognizes that the dispenser is required to maintain at least one copy of the professional labeling for each drug product that is available for dispensing. The agency advises that practitioners and dispensers are not required either to provide or make available professional labeling upon the patient's request, nor are they prohibited from making it available. Accordingly, the agency has revised the requirement so that patient package inserts will state that the dispenser or practitioner has a more technical leaflet about that drug that the patient may review, but the statement is not required to suggest that the patient has a right to obtain a copy. The agency, however, encourages practitioners and dispensers whenever possible to give copies to patients who request them. FDA believes that patients should not be denied access to this information and, thus, the agency routinely provides copies of the professional labeling for a drug product to any person who requests it. Although the labeling may be too technical for many patients to understand easily, practitioners and dispensers should be able to answer questions about the labeling and reduce the amount of confusion produced by its technical language.

31. One comment suggested that each patient package insert should state that its distribution is required under Federal law, and should advise the patient that it does not contain all information about the drug and the patient should not rely upon it alone to evaluate the risks and benefits from use of the product, but should discuss the use of the drug with the practitioner.

The agency believes a statement that patient package inserts are required under Federal law is neither useful nor necessary for patients, because patients may infer from such a statement that patient package inserts are intended to be the patient's primary source of information about the drug, an inference that is directly contrary to FDA's intent that they merely serve as an adjunct to the practitioner's responsibility to discuss drug therapy with the patient. In addition, because patient package inserts will tell the patient that the practitioner and dispenser have more detailed information about the drug, patient package inserts should satisfy the commenter's second request.

32. One comment suggested that patient package inserts should contain a statement suggesting that the patient retain the insert for future reference, especially women patients who may subsequently become pregnant.

In light of the value of patient package inserts as informational resources for the patient and the agency's conclusion that they need only be distributed for initial and not refill prescriptions, the agency agrees that it is important for patients to retain patient package inserts. Accordingly, the agency has revised the regulations to require that patient package inserts contain a statement in the summary suggesting that the patient retain them for future reference.

Class Labeling

33. One comment urged that FDA not encourage the use of class patient package inserts in which the same information is provided for various products that may not be identical but which are related and therefore comprise a particular drug class. One comment suggested that patient package inserts are best focused and most informative for patients if they apply only to a specific drug product or to small number of very closely related drug products. Another comment suggested that the use of guidelines for a class of prescription drug products might result in the misbranding of individual members of the class if the individual drugs were not approved for all the indications identified in the class inserts. In light of this potential consequence, the comment urged that class patient pacakge inserts be confined to those drug products that have uniform approved indications.

The agency believes that patient package inserts that apply to a class of drugs can be appropriately focused and adequately inform patients where the class is composed of closely related drugs. Patient labeling now required for oral contraceptives, estrogenic drug products, progestational drug products, and intrauterine devices for contraception that are regulated as prescription drugs are all examples of drugs for which patient class labeling is used already. Moreover, class patient package inserts can help reduce the burden on manufacturers, distributors, and dispensers inherent in requiring them to develop and dispense product-specific labeling. The agency intends to establish single guideline under these regulations for the ampicillin, benzodiazepine, and thiazide drug classes in its initial program, described above. The agency concludes, however, that patient package inserts for drug classes under the FDA's program can be adequately regulated under the general regulations applicable to patient package inserts, and the agency has deleted specific regulatory requirements concerning class patient package inserts as unnecessary.

The agency notes that patient package inserts will not incorporate the concept of comparative labeling embodied in its currently evolving professional class labeling program. Professional comparative labeling is intended to help professionals decide which drug in the class is most appropriate for a particular patient. That labeling would, consequently, provide detailed information about the similarities and differences between products in a drug class, information which FDA has no present basis for making available to patients.

34. A comment suggested that a minimum type size requirement should not be established because it might result in lengthy patient package inserts labeling for some drugs.

Minimum specifications are needed to ensure that patient package inserts will be legible. Although printing smaller than that set forth in the proposed

requirements might result in shorter leaflets, the reduction in leaflet length would be accomplished by sacrificing their legibility. The final rule, therefore, retains the proposed minimum printing requirements.

Distribution of Patient Package Inserts

35. One comment asked for clarification of the requirement in § 203.24 that the dispenser provide the patient package inserts as separate leaflets. The comment asked whether the practitioner and dispenser could provide the patient with oral or written information in addition to the insert.

The requirement was intended to prohibit dispensers from appending promotional information to patient package inserts. That requirement was not intended to affect the exercise of the practitioner's and dispenser's professional responsibility to provide additional oral or written information about the drug product to the patient.

The agency emphasizes that it encourages the practitioner and dispenser to discuss with their patients both their drugs and patient package inserts. One of the purposes of patient package inserts is to promote such discussions. The regulations do not concern the providing of oral advice by either practitioners or dispensers. Generally, written or oral advice furnished to a patient about drug therapy by a practitioner falls within the "practice of medicine," with which the agency will not normally interfere.

36. Commenters argued that the practitioner rather than the dispenser should be required to provide patient package inserts to the patient.

In the preamble to the proposal (44 FR 40032–40033; July 6, 1979) FDA discussed fully its rationale for requiring that dispensers rather than practitioners distribute patient package inserts. Nothing in the comments, nor in the studies which have been conducted since the proposal, alters the agency's conclusion that dispensers are better suited to distribute patient package inserts. Pharmacists have traditionally served as dispensers of prescription drug products. The agency finds that they are better able to handle and store the inserts, and to provide them to patients. Drug products are also often prescribed by telephone, and some patients who take drug products on a chronic basis may not visit the practitioner for a significant length of time during which patient package inserts might be established for the drug product or rewritten. Thus, practitioners may not even have the opportunity to provide package inserts to the patient. Some data suggest, moreover, that patients are more attentive at the time of diagnosis to detailed information about their diagnosis than they are to information about the drugs prescribed, and may thus be more willing to read and consider the patient package inserts when the drug products are dispensed.

37. One comment asserted that manufacturers are unable to monitor the practice of drug product dispensers and asked that the regulations clearly state that manufacturers bear no responsibility for ensuring that patient package inserts are provided to patients.

The dispenser of the drug product is resonsible for giving a patient package insert to the patient. The agency advises that if the manufacturer or distributor has complied with its obligation to provide patient package inserts to the dispenser, it will not, except in exceptional circumstances, be proceeded against for the dispenser's failure to provide patient package inserts to the patient. Similarly, if the manufacturer has complied with its obligation to provide patient package inserts to a distributor, it will not, except in exceptional circumstances, be proceeded against for the distributor's failure to provide inserts to the dispenser.

38. One comment objected to the proposal that dispensers establish and follow a procedure to ensure that patients can easily match correct patient package inserts to drug products. The comment suggested that that requirement was unnecessary because proposed § 203.20(b)(2)(i) requires patient package inserts to include the established name of the drug product, and permits the package inserts to include their brand name, and because proposed § 203.20(b)(2)(ii) requires package inserts that identify the product's manufacturer. To the contrary, one comment suggested that FDA require that the dispenser place both the name of the drug on the label of the dispensing container and the prescription number on the package inserts.

The agency does not agree that a requirement that dispensers establish and follow a procedure to ensure that patients can easily match patient package inserts to drug products is unnecessary. The commenter misunderstands the effects of the requirements. Although the patient package inserts are required to contain the established name of the drug product and permit the use of its brand name, neither the act nor FDA regulations require that the established name or brand name of a drug product appear on the label of the dispensing container. The commenter also misunderstands the provision that requires that patient package inserts give the name and place of business of the product's manufacturer, packer, distributor, or dispenser. It does not require that that information appear on the dispensing container label, and moreover, may be met without identifying the manufacturer. Thus, the regulations need a special requirement to ensure that a patient can match correct patient package inserts to drug products.

Even though it is not required under Federal law, many dispensers place the established name or proprietary name, or both, on the label of the dispensing container. (Such labeling is required under many State laws.) FDA believes a specific requirement that the prescription number appear on patient package inserts is unnecessary when dispensers place the drug's name on the label of the dispensing container. Thus, in the interests of minimizing the number of obligations on dispensers, the agency in § 203.24 requires only that dispensers establish and follow a procedure to permit drugs and package inserts to be easily matched. Dispensers may place the prescription number on patient package inserts, or may place the drug's name on the prescription label, or use another equally effective means to give patients a way to match the patient package inserts to the correct drug product.

39. One comment suggested the requirement that the dispenser ensure that the patient can easily match patient package inserts to drug products should not apply to drugs administered by a physician.

The agency agrees that it is unnecessary to require that practitioners establish a procedure for patients to use to match patient package inserts to drug products that the practitioner directly administers. The "matching" requirement is intended to prevent confusion when the patient is taking multiple medications without direct supervision. The agency believes, however, that the comments' interpretation of the requirement is inherent in the regulation, and thus, no change in the wording of the requirement is necessary. Where the practitioner dispenses by other than direct administration in a single dose, the regulation requires that the practitioner match the insert to the drug product just as the pharmacist would do.

40. One comment objected to the proposed requirement that patient package inserts be provided with each bulk container of a drug product. The comment contended that shipping containers would have to be redesigned

to hold the inserts and that drug wholesalers who split up a manufacturer's shipping container and distribute individual bottles to pharmacies will have to assume additional expenses for splitting up the patient package inserts. Comments suggested the agency require manufacturers to provide patient package inserts directly to practitioners and dispensers instead of requiring them to be packaged and distributed physically with the drug product.

FDA recognizes that any patient package insert distribution system must meet the objectives of (1) ensuring that dispensers have adequate numbers of patient package inserts to dispense and (2) making clear the responsibilities of those in the distribution system. At the same time, FDA wishes to provide sufficient flexibility to permit manufacturers and distributors to avoid unnecessary costs. Accordingly, the agency has revised the patient package inserts distribution requirements. Under the final regulations, manufacturers are required to distribute patient package inserts with drug products they manufacture in any way reasonably calculated to ensure that supplies of patient package inserts adequate for ultimate dispensing are received (1) by the party to whom the drug is shipped or (2) by the dispenser. Thus, in the case of drug products shipped to distributors, manufacturers are required to supply those distributors or the dispenser who obtain the products from them with adequate numbers of patient package inserts to accommodate the number of prescriptions (excluding refills) at the retail level that the volume of drug shipped may reasonably be expected to fill. For those drug products shipped directly to dispensers, the manufacturer is required to ship an adequate number of patient package inserts directly to the dispenser. In either case, the obligation may be met directly by the manufacturer or by another person, such as a contractor, who supplies the patient package inserts on the manufacturer's behalf.

This provision will avoid a need for manufacturers to redesign containers to accommodate patient package inserts, a source of complaints in the comments, and to avoid as well the imposition of artificial constraints on manufacturers to limit the number of package inserts shipped due to container size.

Distributor requirements under the regulations parallel those of manufacturers. Patient package inserts shipped from the distributor, or on the distributor's behalf, to dispensers need not physically accompany the drug product, but must be shipped in a way reasonably calculated to provide adequate supplies to dispensers. Alternatively, if the distributor can assure that the dispenser has received patient package inserts from another source, such as the manufacturer or the manufacturer's agent, the distributor need not provide duplicative patient package inserts.

The agency recognizes that even by permitting patient package inserts to be shipped separately from the drug, or directly to the dispenser, distributors will still be required to provide patient package inserts to dispensers in the majority of situations. FDA's objective is to reduce to the extent practicable the shipment burdens on all parties in the chain of distribution and still ensure that dispensers have available sufficient inventories of patient package inserts. In this regard, FDA published in the Federal Register of October 13, 1978 (43 FR 47198) a separate proposal that would specifically permit, among other things, the use of "labeling agreements" under which distributors might be relieved of all labeling responsibilities if the manufacturer, distributor, and dispenser agreed to shift the labeling responsibility to the dispenser. A similar proposal was incorporated into the proposed general patient package inserts requirements. The October 13, 1978, proposal permitted such agreements to be used immediately, but to date, agency records do not indicate that any such agreements have been entered into. Because these agreements have not been used in practice, and because they impose conditions more strict than those the agency now believes necessary, they have not been adopted in these patient labeling regulations. The labeling agreements were an attempt to provide a contract mechanism which the agency believes can be accomplished, for patient package inserts, by a greater variety of means. Under the final rule, manufacturers and distributors are free to utilize additional mechanisms by which their obligation to provide patient package inserts in conjunction with the drug can be met. Manufacturers or distributors may themselves print and ship package inserts directly to dispensers or can arrange with other parties, including dispensers, to make them available. The only constraints are that neither manufacturers nor distributors may shift the burden to request package inserts to distributors or dispensers, nor may they avoid their legal obligation to prepare and provide or see to it that patient package inserts are prepared and provided. Nothing in the revised distribution system is intended to prevent distributors and dispensers from providing "generic" patient package inserts, that is, package inserts that are not required to be product specific and are prepared by the distributor or dispenser.

41. One comment suggested that the regulations do not adequately address the problems involved in the distribution of patient package inserts to health care professionals other than dispensers. Thus, the comment claimed that nondispensing practitioners may not have access to the text of patient package inserts and will not receive sufficient copies to permit practitioners to provide them to patients.

The regulations do not require that patient package inserts be provided to nondispensing practitioners, although the agency encourages manufacturers to provide patient package inserts to them. The regulations permit a manufacturer to distribute to practitioners, as well as to pharmacists and other dispensers, copies of patient package inserts that are in addition to the copies of inserts required to be provided under the regulations. Moreover, under § 201.57 of the agency's general labeling regulations the text of patient package inserts are required to be included in the drug product's professional labeling. In addition, because professional labeling is available to practitioners from manufacturers through salespersons or advertising, and is also found in the "Physicians' Desk Reference", nondispensing practitioners will have access to the text of patient package inserts, although they may not routinely have adequate supplies of the inserts for individual patients.

42. Several comments argued that distributors and dispensers should not be permitted to discard the manufacturer's patient package inserts and substitute distributor or dispenser prepared package inserts because it would be wasteful and because the information in the substituted inserts might be less accurate or less current than the manufacturer's inserts. One comment noted that generic package patient inserts would not identify the specific drug product to which they apply. The comment suggested that patients would benefit by patient package inserts that identify a specific drug product, particularly in the case of an overdose or the occurrence of a serious adverse reaction.

FDA believes that distributors and dispensers of drug products are capable of preparing accurate and current patient package inserts, particularly if FDA guidelines are available for the drug product. Thus, the agency believes

that distributors and dispensers should be free to prepare and use their own patient package inserts if they so desire. In addition, given the distribution requirements discussed above, the agency believes that manufacturers, distributors, and dispensers can work together to avoid unnecessary waste of patient package inserts resulting from the desire of distributors and dispensers to prepare their own package inserts. Finally, although the agency agrees that patients may find benefits in product-specific patient package inserts that they might not realize from generic patient package inserts, the agency is not persuaded that the benefits from product-specific inserts outweigh the reduction in the burdens and costs of the patient package inserts which program distributors and dispensers may obtain from the use of generic inserts. Accordingly, the regulations permit the use of generic patient package inserts.

43. One comment suggested that FDA develop and print all patient package inserts and provide them to dispensers.

FDA simply does not possess the resources that would be needed to print and distribute patient package inserts. Furthermore, it is appropriate that manufacturers, distributors, and dispensers who are in the business of developing and distributing drug products should develop and distribute patient package inserts for their products. FDA will, however, help manufacturers, distributors, and dispensers of drug products through the agency's preparation of guidelines.

44. One comment suggested that distribution problems with patient package inserts could be avoided if drug products subject to patient package inserts requirements were required to be distributed in unit-of-use packages that would contain the package inserts.

The agency agrees that unit-of-use packaging would reduce many of the burdens associated with obtaining, storing, and distributing patient package inserts. At the same time, the agency believes that to mandate the use of unit-of-use packaging would require significant changes in the current practices involving the packaging, prescribing, and dispensing of prescription drugs. Because it is not clear that unit-of-use packaging is essential to the success of a patient package inserts program, FDA is not willing to require manufacturers to ship their products in unit-of-use packages. However, where unit-of-use packaging is chosen by the manufacturer, a patient package insert must be provided in or with each package.

45. A comment suggested that the requirement that a bulk container label provide instructions to the dispenser to provide patient package inserts to patients is unnecessary, and may be misleading given the exemption permitting practitioner withholding patient package inserts. One comment urged that the regulations be clarified to provide that if a dispenser does not receive enough patient package inserts with a bulk shipment, the dispenser may duplicate package inserts until more can be obtained.

The agency believes that the required instruction on the bulk container label to the dispenser to provide patient package inserts when products are dispensed is necessary and not misleading. Because relatively few products will be subject to the patient package inserts regulations during the agency's initial program, it is important that the dispenser be able to identify easily those products that are subject to the requirements, and it is for this reason that bulk drug product containers are required to be labeled with dispenser instructions. Manufacturers and distributors may, however, qualify the instructions on the bulk container labeling to inform dispensers that the labeling is to be dispensed unless otherwise directed by the prescribing physician or the patient asks for it. The agency recognizes that, if a dispenser does not receive enough patient package inserts from the manufacturer or distributor, the dispenser may find it necessary to dispense duplicates of the manufacturer or distributor package inserts in order to fulfill the dispenser's obligations under the regulation.

46. Several comments suggested that the costs and other burdens to manufacturers, distributors, and dispensers of prescription drug products from FDA's patient package inserts regulations could be reduced significantly if patient package inserts were required to be distributed only with new prescriptions and not refill prescriptions. One comment suggested that providing patient package inserts for both new and refill prescriptions would cause patients to become insensitive to the importance of the package inserts.

Other comments, however, argued that an insert should be provided each time a prescription drug is dispensed. These comments contended that providing a patient package insert with each refill would ensure that, if any changes were made, the patient would receive the most up-to-date information. Moreover, the comments suggested that distribution of an insert with each refill would spare the pharmacist the need to keep records about when it was provided. Finally, several comments stressed the importance of distributing an insert with each refill in those situations where the condition of the patient might change, making a previously inapplicable warning pertinent to the patient.

The agency is persuaded that the benefits of using patient package inserts will not be significantly diminished while the costs are likely to be significantly reduced if the leaflets are required for the initial prescription only. More than half of all prescriptions are refills and the agency has estimated the savings from requiring patient package inserts for new prescriptions only to be as high as 40 percent of the costs of requiring distribution of patient package inserts for both new and refill prescriptions. The agency believes these reductions in costs outweigh the advantages in requiring that an insert be provided with each refill prescription. FDA, however, encourages dispensers, relying on their patient records, to provide patient package inserts to patients whose prescriptions are refilled initially after these regulations take effect and to provide patient package inserts to patients whose prescriptions are refilled after a significant change in the inserts. Finally, § 203.26(a) has been amended to require dispensers to give a patient the patient package inserts if the patient asks for a copy, either when a prescription is refilled or when the practitioner may have directed the pharmacist to withhold the labeling.

Alternative Dispensing Provisions

47. One comment interpreted the proposal to mean that distribution of patient package inserts to the parent or legal guardian of a legally incompetent patient was not required, but that the regulations simply permit it as an alternative to providing them directly to the patient. Another comment suggested that the provision should be revised to clarify that a dispenser may provide the parent or legal guardian of a patient with patient package inserts only when the patient has been found to be legally incompetent. The comment also suggested that the definition of mental disability in the proposal is confusing and should be deleted. Another comment asked whether the exemption for legally incompetent patients would permit the dispenser to provide them to an agent of the parent or guardian. One comment urged that the exemption for mentally disabled persons apply only to drug products intended to treat the patient's mental disability and not to products, such as antibiotics, that are intended to treat other conditions.

FDA advises that dispensers are required neither to determine the competency of a patient nor, if the legal incompetence of a patient is established, to seek a parent or guardian to whom they must give the insert. This provision authorizes but does not require dispensers (in most cases this is expected to be the physician administering the drug) to give patient package inserts to parents or guardians where, for example, the drug is administered to a small child in the presence of the child's parent or guardian.

The agency has deleted the definition of mental disability and has clarified that the dispenser may provide the insert to an agent of the parent or guardian of the legally incompetent patient, as well as to the parent or guardian directly. The agency does not agree, however, that this provision should only apply to drug products intended to treat the patient's mental disability. The dispenser's option to give an insert to a parent or guardian is reasonable because the patient is unable to understand and act upon the information provided. This rationale does not depend upon the patient's ailment. Thus, under the final rule, the option applies whether the drug product dispensed is intended to treat mental disability or for some other condition.

48. One comment interpreted the proposal correctly as permitting the distribution of patient package inserts in braille or written in the patient's primary language if it is other than English in place of distributing an English language text of patient package inserts. The comment noted that the agency did not propose an exemption from the distribution requirements, but simply proposed that alternative patient package inserts could be distributed to certain patients. Several comments suggested that the agency should require patient package inserts in Spanish and other languages and in braille to be distributed in the same manner as English patient package inserts texts, while other comments suggested that the agency should encourage voluntary distribution.

The regulations do not exempt dispensers from providing patient package inserts to non-English speaking persons or to blind persons. The provision in the regulations is intended to permit dispensers to provide alternative patient package inserts in languages other than English or special formats such as braille to certain patients who would benefit more from them than from English language inserts. The agency has revised the regulations to clarify the permissive nature of this provision for dispensers.

49. One comment suggested that to deny patient package inserts to non-English speaking consumers denies them equal protection of the law. Another comment suggested that FDA would violate a July 27, 1979 memorandum of understanding between the Office for Civil Rights and the Public Health Service, if the agency establishes regulations that do not require braille and bilingual patient labeling.

The agency does not agree that the agency's failure to require patient package inserts in languages other than English denies non-English speaking patient equal protection of the law. The agency has determined that the costs and logistics associated with mandatory distribution of alternative language inserts are not now justifiable. Except for a very few areas, the population of the United States is too heterogeneous to enable manufacturers, at reasonable cost and with reasonable simplicity, to determine exactly where to provide alternative language inserts.

Nevertheless, the agency believes that the sizable Spanish speaking minority in this country should have access to patient package inserts in its primary language. Thus, FDA is persuaded by the comments, which primarily ask that Spanish language patient package inserts be required in the same manner as English language patient package inserts, that the agency's regulations should provide for the preparation of Spanish language inserts without unnecessarily burdening manufacturers. Thus, the agency has revised the regulations to require that manufacturers prepare an adequate amount of patient package inserts in Spanish so that they can be supplied, upon request, by the person, for example, the local pharmacist, to whom the drugs are shipped. Manufacturers and distributors will not have to determine where to provide Spanish language patient package inserts, but dispensers of prescription drug products in communities that have sizable Spanish-speaking populations will be able to obtain Spanish language inserts for their patients. Dispensing of Spanish language patient package inserts, like other non-English language patient package inserts, is optional; it is not required. Patient package inserts written in braille or in other languages may also be prepared by manufacturers and provided by dispensers. Nothing in the regulation precludes dispensers from using such patient package inserts and the agency encourages organizations with special interests in non-English language publications to work with dispensers, manufacturers and other groups to promote the use of specialized patient package inserts.

The agency has carefully reviewed these regulations with respect to braille and bilingual labeling, and the agency believes it has complied with the memorandum of understanding with the Office for Civil Rights.

Exemptions From Patient Package Inserts Dispensing Requirements

50. Many health care professionals contended that the proposal to permit practitioners to direct the dispenser of a product to withhold the patient package inserts was too restrictive. Health care professionals argued that practitioners should have an absolute right to deny patient package inserts to patients. The comments argued that many patients lack the ability to evaluate the benefits and risks of prescription drug products, and thus patient package inserts would upset them, would lead them to refuse to comply with their treatment program, and would require practitioners and dispensers to devote more time to counseling patients. One comment contended that the withholding exemption should be revised to provide that patient package inserts would not be distributed unless the practitioner directs that they be provided to an individual patient. One comment argued that FDA should give nonprescribing dispensers of prescription drugs, including pharmacists, the same authority as practitioners to withhold patient package inserts from patients.

On the other hand, many comments argued that FDA should not permit practitioners to deny patients access to patient package inserts. The comments contended that patient package inserts can be written in a nonthreatening way so they do not alarm patients. Moreover, some comments argued that given a withholding exemption, some practitioners would arbitrarily deny patient package inserts to their patients. One comment suggested that the practitioner should not be permitted to withhold them unless FDA makes a specific finding that withholding is warranted for a specific drug product. The comment observed that such a withholding exemption was adopted in the Drug Regulation Reform Act of 1979 (S 1075, 96th Cong., 1st Sess. (1979)). Another comment suggested that FDA require the distribution of patient package inserts under all circumstances to avoid confrontations between pharmacists and physicians and pharmacists and patients about whether patient package inserts should be distributed.

While it is impossible to predict precisely how every patient will react to information contained in patient package inserts, the agency believes that a patient's possible reaction to the information may rarely produce adverse emotional or physical effects justifying withholding them. Thus, the regulations allow practitioners to direct dispensers not to provide patient package inserts when a drug is dispensed. The agency concludes, however, that while the potential for patient package inserts to cause adverse effects in some patients justifies permitting the practitioner to direct that labeling be withheld, it cannot justify a broader requirement that they be withheld unless the practitioner directs its distribution. In order to assure that directions to withhold patient package inserts not become routine, for example, by appearing on pre-printed prescription pads, the final regulation has been amended to require that the direction be written in the practitioner's own hand. A similar provision was adopted in the Department's Maximum Allowable Cost (MAC) regulations governing Federal reimbursement for prescription drugs under Medicare and related programs. Because FDA believes dispensers generally are less knowledgeable about the condition of the patient for whom the drug product was prescribed, the agency does not agree that dispensers should be given the same authority as practitioners to withhold patient package inserts. Finally, the agency believes that the patient has the right to make the ultimate decision about his or her own treatment and thus the patient should have the power to overrule the practitioner's direction. Thus, the final regulations provide that the dispenser of a prescription drug product is required to provide patient package inserts to any patient who requests them when the drug product is dispensed, even if the practitioner has directed that they not be provided.

51. One comment asked for clarification of the manufacturer's responsibility if a patient asks the manufacturer for a copy of the patient package insert for a product even though the patient's physician has directed that it not be provided to the patient. The comment suggested that manufacturers should be prohibited from providing patient package inserts directly to patients. One comment suggested that the direct distribution of patient package inserts from manufacturer to patients might be considered promotion of the manufacturer's product, and thus a violation of the regulations.

Because the patient has the opportunity to obtain the patient package inserts when the drug product is dispensed, the agency believes it unnecessary to impose an affirmative requirement on manufacturers to respond to patients' requests. Nevertheless, FDA encourages manufacturers to provide a patient package insert to anyone who asks for a copy. Although the regulations prohibit patient package inserts that are promotional in tone, the agency would not view manufacturers who provide patient package inserts that are identical to those available from practitioners or dispensers directly to patients as violating that prohibition.

52. One comment contended that the emergency exemption provision is too broad for the following reasons: A drug first administered during an emergency may be part of a continuing program of therapy and thus the patient may need the insert later; a woman patient may discover after the emergency administration of a drug that she was pregnant when the drug was dispensed and may want or need to know the potential risks to the unborn child; or a patient may need the insert to monitor potential side effects from the drug after the emergency has passed. In addition, because an emergency may make it impossible for the patient to receive oral information about a drug, several comments noted that patient package inserts may provide the only source of information to the patient. Thus, the comments recommended that the exemption be revised to require dispensers to distribute patient package inserts once the emergency is passed, unless contact between the patient and the dispenser or the dispenser's agent is not reasonably possible. Another comment asked that the agency clarify the exemption to ensure that it is not applied to drug products dispensed in hospital emergency rooms under nonemergency conditions.

The agency is not persuaded that patient package inserts should be required for patients who receive a drug in the course of emergency treatment. Distribution in emergency situations imposes significant logistical problems for practitioners and dispensers who, following an emergency, are generally no longer in contact with the patient. This is particularly true with respect to emergency personnel operating outside of a hospital, such as rescue squads. However, the exemption is limited solely to the emergency treatment. The regulations contemplate that patient package inserts will be made available for drugs administered or prescribed in subsequent treatment through the procedures required for hospitalized patients, if the patient is admitted to a hospital, or through the procedures required for dispensers generally if medication is provided on an outpatient basis.

The agency also agrees with the comment that the exemption should apply only to drug products dispensed in the course of emergency treatment, and not to drugs dispensed to outpatients who may have been treated in an area of an institution, such as its emergency room, where both emergency and nonemergency conditions are treated. The agency has amended the final regulations to make this limitation clear.

53. Several comments objected to the provision under which a drug product is not required to be dispensed with an insert if the drug product is dispensed to an institutionalized patient who is told about the availability of the insert and advised of a right to review it upon request. One comment observed that institutionalized patients are in a unique position to monitor their own drug use and that these patients may need to refer to written information about the drug after they leave the institution. The comment contended that patients too ill to make use of patient package inserts will not be harmed by receiving them and that logistical problems involved in distributing patient package inserts can be overcome. One comment suggested that the system applicable to institutionalized patients should require that a pharmacist counsel the patient about dispensed drug products instead of requiring that patient package inserts be made available to the patient. Another comment suggested that the system be conditioned on the institution informing the patient or guardian about the availability of patient package inserts. One comment suggested that prescriptions filled for institutionalized patients at the time they are discharged should not be exempted from the patient package inserts requirements. One comment suggested that the regulations authorize FDA to require that patient package inserts for particular drug products be provided to institutionalized patients.

To balance the needs of institutionalized patients for drug information with the needs of hospitals, nursing homes, and other health care institutions not to be burdened with complex distribution requirements, the final regulations permit health care institutions to adopt a system that is reasonably calculated to advise patients on admission of the availability of patient package inserts, and to

implement a mechanism that is reasonably calculated to make that information available to patients on request. The information need not be provided as a separate retainable package insert; instead, for example, the use of a compendium of drug information made available to patients is acceptable. Alternatively, the institution may provide patient package inserts to patients in the same way as they would be provided to non-institutionalized patients. Under the final rule the option is left to the institution. Although FDA believes patient information for prescription drug products should be available for institutionalized patients, there are several reasons why the requirements need not be the same as those for patients who obtain drugs from neighborhood pharmacists. Hospitalized patients receive more continuous, if not more intense, medical supervision than out-patients. As a result, health care professionals are available to encourage and ensure adherence to the dosage regimen, and to recognize adverse effects. Moreover, imposing the same patient package inserts requirements in institutions as in pharmacies will create significant logistical difficulties; the number of patients and the number of possible drug combinations for each patient would impose time consuming, costly, and complex obligations.

FDA agrees, however, that the need for patients to have drug information following discharge from a health care institution requires that patient package inserts be provided by the institution in a retainable form if the drug product is to be used outside the institution. The final regulations have been amended accordingly.

FDA believes that to require consultation with pharmacists is impracticable and burdensome. With respect to advising parents or guardians about the availability of patient package inserts, the institution's obligation includes the development of a mechanism that is reasonably calculated to advise patients of the availability of patient package inserts at the time of admission. FDA contemplates that parents or guardians accompanying the patient will be similarly advised. Institutions are required to provide parents or guardians with the information upon request. Finally, the agency believes that a revision of the regulations now to permit FDA to require the distribution of specific patient package inserts in health care institutions is unnecessary in the absence of evidence that institutionalized patients will not have access to patient package inserts under these final regulations.

54. Several comments asked for clarification of the kinds of health care institutions to which a special patient information distributor mechanism may apply. Several comments suggested that it not apply to nursing home patients. Other comments noted that although many of these patients are fully rational and sufficiently healthy to require only minimal care, many nursing homes do not have programs to educate residents about drug products, and staffs are often not available to answer residents' questions about drug products. These comments concluded that the logistical burden on nursing homes did not outweigh the residents' rights to receive patient package inserts.

The alternative distribution mechanism applies to patients in institutions whose primary business is providing health care for institutionalized patients, namely hospitals, nursing homes, college infirmaries, and intermediate care facilities. Accordingly, the applicable regulation, codified in the final rule as § 203.35, refers in the title to "health care institutions." Under this provision patient package inserts will be made available to nursing home residents.

55. Several comments argued that the criteria for health care institutions should apply to drugs dispensed to a woman during labor or delivery, just as they do to other institutionalized patients. The comments observed that the best time to provide information to patients about drug products commonly dispensed during labor or delivery is during prenatal care. The comments noted that many women arrive at the institution in labor and often are under a great deal of stress that may interfere with their ability to consider and thus benefit from patient package inserts.

The agency has concluded that pregnant women have the same need for patient package inserts as all other patients. Therefore, the rules governing the provision of patient package inserts to pregnant women in hospitals will be the same as those applicable to other patients in health care institutions. Thus, a woman admitted through the normal admission procedures will be advised of the availability of patient information and have access to it. An admission of a woman in an advanced stage of labor would likely be subject to the provisions for emergency treatment. The agency encourages health care professionals and health care institutions to avoid the difficulties of discussing drug therapy with women about to give birth by providing pregnant patients with information, including patient package inserts, at the time of prenatal examinations.

Drugs for Which Patient Package Inserts Should Be Required

56. Some comments suggested that the patient package inserts requirements should be applied to prescription drug products that are compounded by pharmacists, while other comments objected to the application of the requirements to those products. The comments in favor of applying the requirements suggested that patient package inserts about the active ingredients used in compounded products should be provided to patients.

The agency does not believe at this time that active ingredients used in pharmacist-compounded prescriptions should be subject to the patient package inserts requirements. Generally, active ingredients used in pharmacist-compounded prescriptions, such as products to treat dermatologic conditions, have so many potential uses and can be used in so many different combinations that it would be very difficult to draft patient package inserts to meet the requirements of these regulations, which are intended to apply to drug products produced by drug manufacturers and distributed to pharmacists and other dispensers.

57. Comments objected to the application of the patient package inserts requirements to drug products administered or prescribed by dentists.

No basis has been presented for exempting drugs administered or prescribed by dentists. Patient package inserts requirements are applied to specific drugs, and no distinction has been presented between the needs of dental patients for information about drug products and needs of patients of other health care professionals.

58. Several comments suggested that certain drugs, such as biologics, allergenic extracts, and diagnostic radiopharmaceuticals be exempt from the patient package inserts requirements. Other comments urged that drugs commonly used in pregnant women during labor and delivery, and antipsychotic, antidepressant, and anticancer drugs be added to the list given in the proposal for the initial application of the patient package inserts regulation. One comment objected to the agency's criterion for selection of drugs based upon whether the drug is "elective." The comment contended that all drug products are elective because a patient may decide to forego treatment based on the patient's evaluation of the risks and benefits associated with the use of the drug product and the lack of treatment. Other

comments suggested that several of the drugs listed are not suitable for election by the patient.

Comments objected specifically to the application of the patient package inserts regulations to chlorpropamide, digoxin, and phenytoin. They contended that these drugs do not met FDA's selection criteria. The comments suggested that it would be difficult to describe in nontechnical language the potential side effects of the drugs, and patient package inserts might increase the rate of noncompliance because of patient fears about the drugs, or reduce the patients' contacts with the health care practitioner because of the patients' reliance on the insert. One commenter also contended that patient package inserts cannot be required for chlorpropamide until the issues raised by FDA's 1975 proposed professional labeling for oral hypoglycemic drug products are resolved.

As stated earlier in this preamble, the agency will require patient package inserts for the following 10 drugs and drug classes during the initial program to implement the agency's general patient package inserts regulations: ampicillins, benzodiazepines, cimetidine, clofibrate, digoxin, methoxsalen, propoxyphene, phenytoin, thiazides, and warfarin.

These drugs or drug classes were selected on the basis of the following criteria: (1) Whether patient package inserts would affect the patient's decision to use the drug, (2) whether patient package inserts would help prevent serious adverse effects, (3) whether patient package inserts would help increase the patient's adherence to the prescribed course of therapy, and (4) the extent to which a particular drug is prescribed. Although all four criteria do not apply to all 10 drugs, each drug, including digoxin and phenytoin, is subject to at least two and most more than two, and the drugs are therefore appropriate subjects for the patient package inserts requirements during the pilot program. Patient package inserts for ampicillins, benzodiazepines, clofibrate, and propoxyphene may affect the patient's decision to use the drug. Patient package inserts for all 10 drugs or drug classes would help prevent serious adverse effects. Patient package inserts for all the drugs, except benzodiazepines, clofibrate, and propoxyphene may increase the patient's adherence to the prescribed course of therapy. All of the drugs, except methoxsalen, are widely used. Elsewhere in this issue of the Federal Register the agency is publishing a notice containing draft guideline patient package inserts for the 10 drugs or drug classes. That notice describes more fully the drugs and drug classes.

The agency concludes that, given its selection of 10 drugs or drug classes for the initial implementation program, it is unnecessary now to consider the application of the patient package inserts requirements to other drug products. During the evaluation program, the agency will review its selection criteria for applying the requirements.

59. Several comments contended that the application of the patient package inserts requirements to specific drugs used to treat a particular condition will give an economic advantage to the manufacturers of those drugs not covered by the regulation. The comments contended that the regulations should be applied at one time to all drugs used to treat a condition (for example, patient package inserts should be required simultaneously for all drugs used to treat high blood pressure). According to the comments, such a requirement would ensure that all patients treated for a particular condition would be uniformly informed of the risks and benefits of use of products prescribed for that condition.

The agency is not persuaded that the application of the patient package inserts requirements to specific drugs used to treat a particular condition gives an economic advantage to the manufacturers of drugs not covered by the regulation. It is equally arguable that the availability of patient package inserts for drugs present an economic advantage because they will be viewed as desirable. It also disputes the implication that the added costs attributed to package inserts will necessarily affect a drug product's share of the market. The agency believes, rather, that practitioners in prescribing drug products rely less on the cost of the product than they do on other considerations, such as the patient's medical history, the specific condition for which the drug product is prescribed, and their own familiarity with the drug. In addition, the agency, as discussed above, intends to prepare guideline patient package inserts for certain classes of drugs (for example, ampicillins, benzodiazepines, and thiazides) which will apply uniformly to manufacturers of the drug products in the class.

60. One comment suggested that patient package inserts should not be required for drug products that are administered over a short period of time and, thus, involve no risk. Another comment suggested that patient package inserts be required only for those drug products for which there is clear evidence that such inserts are essential to the health and safety of the patient.

FDA disagrees with these comments. Duration of treatment is not the only factor to be taken into account in deciding whether patient package inserts will enhance the patient's use of prescription drugs. In some cases, duration of therapy may have little relationship to risks to the patient. In the proposal, FDA identified four criteria for initially identifying those drugs that should be subject to patient package inserts requirements. They are: (1) Whether patient package inserts would affect the patient's decision to use the drug, (2) whether patient package inserts would help prevent serious adverse effects, (3) whether patient package inserts would help increase the patient's adherence to the prescribed course of therapy, and (4) the extent to which a particular drug product is prescribed. The agency believes that these criteria all reflect situations where patient package inserts will promote the safe and effective use of drugs by patients and, thus, are more appropriate than those suggested by the comments.

61. Several comments suggested that the drugs for which patient labeling is currently required by separate regulations should be subject to the dispensing and distribution requirements under these final regulations.

As stated in the patient package inserts proposal, the agency will propose to conform current regulations for specific drugs to the general requirements promulgated in Part 203. However, this final rule currently excludes, in § 203.30(d), drugs subject to patient labeling requirements under separate regulations.

62. Several comments contended that to make the patient package inserts requirements effective for a specific drug 120 days after the publication of a notice in the Federal Register does not provide enough time for printing and distributing the package inserts. Another comment interpreted the phrase "unless a different time period is stated in the notice" only to permit periods longer than 120 days because shorter periods would be unreasonable. Several comments recommended that the requirement for a product be made effective 180 days after the date of publication of the final guideline for that product. A longer effective date would reduce the costs and burdens on manufacturers by minimizing the need to discard obsolete patient package inserts, by permitting larger orders of them at discount prices, and by avoiding

labor costs and repackaging and relabeling operations. A comment also noted that a drug product's professional labeling is required under § 201.57 to include the product's patient package insert and, thus, the professional labeling must be revised when the patient package insert is required for a product. Several comments argued that the regulations should be applied only to drug products packaged after the effective date.

Several comments objected to the provision in § 203.30, which would permit the agency to prohibit the further distribution of a drug product without patient package inserts, notwithstanding the product's lawful initial introduction or initial delivery for introduction into interstate commerce, if the agency determines that such action is necessary to protect the public health. The comment contended that the agency should at least describe those circumstances under which protection of the public health would warrant such an extraordinary disruption of distribution of drug products.

The agency has concluded that the effective date of the patient package inserts requirements should be 180 days after the publication of a notice in the Federal Register that a drug is subject to the regulation. However, the effective date applies to all persons having obligations under the regulations—manufacturers, distributors, and dispensers. Manufacturers should begin the shipment of patient package inserts early enough to permit compliance by dispensers by the effective date, or provide dispensers with copies of patient package inserts so that they can be dispensed after the effective date with existing supplies of drugs. The agency believes that the application of the regulations only to products "initially introduced into interstate commerce" after the effective date, as proposed, or to products packaged after the effective date, would unnecessarily confuse practitioners, dispensers, and patients because the requirements would then apply on a dispenser-by-dispenser basis based upon when the manufacturer or distributor packaged or shipped the dispenser's supply of a drug product. Because FDA believes these patient package inserts requirements should be applied to all dispensers uniformly and the patient package inserts for a product should be available at the same time for all patients who are initially prescribed the drug, the agency has revised the effective date provision to state that the final regulations apply to drug products introduced or delivered for introduction into interstate commerce, or held for sale after shipment in interstate commerce after the effective date. Thus, the effective date applies to drugs dispensed, or available for dispensing, at the pharmacy level. Nevertheless, the agency concludes that public health considerations may require that the regulation apply to a specific product in less than 180 days, if the agency determines that patients should be immediately alerted to new information about a drug product, and that flexibility is retained in the final rule.

63. One comment noted that 21 CFR 601.12 provides that changes in labeling for biological products may not be made effective until the holder of the biologic license has received acceptance from the agency. The comment suggested that FDA clarify whether the requirements for patient package inserts are intended to amend § 601.12.

The patient package inserts regulations do not amend § 601.12. Although the agency does not now intend to apply the patient package inserts regulations to a biological product during the initial implementation program, the establishment of an effective date for patient package inserts for a biological product in a Federal Register notice will take into consideration the time needed for the license holder to obtain approval from the agency.

Evaluation Plan

64. During the next approximately 3 years the agency intends to evaluate in more detail, and based on actual experience, the costs, benefits, and other effects of patient package inserts, both as required by these regulations and as carried out under alternative patient information systems.

The agency plans to acquire data for the evaluation from contracted research studies, from the analysis of large scale archival data bases and from review of routine submissions to the agency, including reports on compliance with the initial implementation program. Studies which FDA is cosponsoring with the National Institute of Mental Health are continuing. These studies are examining the relative importance to patients of various pieces of information for patient labeling and comparing the utility of patient package inserts dealing with a drug class with labeling that simply discusses prescription drugs in general. The agency's major experimental study about variations in selected features of patient package inserts, conducted under FDA contract to the Rand Corp., is also continuing.

In addition, FDA will consider all relevant new data that are voluntarily submitted to the agency for review. Material received will be placed on file with the Hearing Clerk so that the public can review it and comment on it at any time. FDA will review all comments received during the initial implementation program before deciding whether to expand, revise, or defer the patient package inserts program. FDA-sponsored studies will be designed to obtain data on several key issues:

a. What are the costs of patient package inserts? Direct costs for drafting, printing, distributing, and dispensing patient package inserts need to be reliably quantified. Indirect additional costs and cost savings, including those that may result if patient package inserts change the amount and nature of interaction between patients and health professionals, also need to be measured.

b. What are the effects of patient package inserts on patients? How and to what extent do patient package inserts influence adherence to dosage regimens and patient monitoring of drug effects? Do patient package inserts help patients take proper precautions to avoid dangerous drug interactions with other foods and drugs? Do patient package inserts discourage inappropriate drug use? Possible effects will be ascertained through questioning patients and through searching archival data bases, including marketing data and records of third party drug reimbursement plans, that record drug use data and the effects of inappropriate drug use.

c. What is the influence of patient package inserts on the patient/professional relationship? Any influence of patient package inserts will likely be evidenced in changes in the incidence or nature of communications between physicians and patients and pharmacists and patients. FDA intends to study the possible influence of patient package inserts on these communications during the evaluation period.

d. What is the most cost effective method for distributing prescription drug information to patients? As discussed above under paragraphs 5 and 8, before deciding to require dispensers to provide retainable patient package inserts when each new prescription is dispensed, FDA considered several alternative ways of providing patients with information about prescription drug products. These included a reference compendia of patient labeling available in pharmacies for patients to consult, distributing compendia directly to patients and their families, and practitioner distribution. The agency wants to acquire data based on experiments comparing the effectiveness

and efficiency of various distribution schemes.

During the on-going evaluation period, the agency is interested in obtaining data on the comparative effectiveness and costs of alternative distribution systems for products subject to these regulations. FDA encourages interested persons to submit to FDA proposals outlining alternative systems. If an alternative distribution study is accepted by FDA and the protocol for the study requires a waiver of the regulations, FDA will exempt the parties involved in the study from those requirements. To be acceptable, a proposal should describe a research design that permits a comparison of the dispensing system required under these regulations and at least one alternative system. Proposals should seek to measure both the costs and benefits of each alternative. Such proposals should state the kind of system to be tested, the location of the test, and the expected duration of the test. If any requirements of the regulations must be waived to permit the proposed testing, the proposal should specify the applicable provisions. If a waiver is required, the test should not begin until FDA notifies the test sponsor of agency approval. FDA advises that it is unable to fund any pharmacy based distribution tests that result from these proposals. FDA has placed on file in the office of the Hearing Clerk a report, "Distribution Alternatives for Patient Labeling," which describes in greater detail the standards that the agency will use to judge proposals.

Testing may be sponsored by any interested individual or group and may be confined to specific geographical areas or to specific institutions. FDA has added to the regulations a new § 203.35 to provide procedures for the agency to waive requirements to enable the testing of alternative distribution systems. The agency asks that test proposals and requests for waivers from the regulations be submitted in the form of citizen petitions to the agency under § 10.30 (21 CFR 10.30). The use of these procedures provides an efficient mechanism for FDA to rapidly file, route, and review these proposals and requests.

Economic Issues

65. Many comments criticized the draft regulatory analysis, stating that it significantly underestimated the costs of the proposed regulation. The comments contended that a number of cost factors were not considered and that those that were considered were greatly understated. One comment estimated the annual cost of the program to be between $214 and $720 million, or two to seven times FDA's estimate.

On the basis of their estimates of the costs involved, several comments urged that the rulemaking either be ended, because the true costs of the regulation outweigh the demonstrated benefits, or that the rulemaking be delayed until FDA conducts and evaluates further studies of the patient package inserts program and alternative programs.

Finally, a number of commenters urged that in light of the uncertainties about the costs and benefits of patient package inserts, FDA should limit the scope of the patient package inserts program to a pilot program that tests several alternatives for informing patients about prescription drugs. Comments said that a pilot program should (1) establish procedures to better estimate the regulation's actual costs and benefits, (2) evaluate alternatives to the agency's program, and (3) state how the information to be derived from the program would be incorporated into the decisionmaking process.

As noted at the beginning of this notice, these comments influenced the agency in deciding to apply the regulation initially only to 10 drugs or drug classes. The agency will make a thorough evaluation of patient package inserts for these drugs during the intial implementation period.

Comments about specific aspects of the draft regulatory analysis are summarized and discussed below.

66. Comments asserted that the proposal would require significantly greater outlays for developing, printing, and packaging patient package inserts than were identified in the draft regulatory analysis. The comments argued FDA had omitted several factors that add to the estimated cost of patient package inserts such as (1) costs of distribution to wholesalers, including costs entailed in determining the number of patient package inserts to be included in each bulk drug package and costs of redesign or replacement of packaging machinery to accommodate larger packages for drug products that could intergrate the inserts, (2) costs of enlarging physician labeling to include the text of patient package inserts, (3) costs of new printing plates, and (4) costs for new cutting dies for patient package inserts and for new packaging. Also, the comments asserted that FDA underestimated the costs to draft and review patient package inserts because it omitted manufacturers' costs of obtaining their own internal review of draft package inserts texts.

The agency agrees that the draft regulatory analysis did not estimate two potentially significant manufacturing costs: costs of distribution to wholesalers and costs of manufacturers' internal review of patient package inserts. These costs have been considered and estimated in the final regulatory analysis. The agency notes, however, that the costs of printing plates and dies was included in the draft regulatory analysis as part of the costs attributed to printing.

67. A number of comments complained that the proposed regulation would substantially increase costs incurred by wholesalers in storing, retrieving, and shipping drug products. The comments suggested that these costs would be especially great for wholesalers who have adopted automated systems of storage, retrieval, and shipping.

The agency agrees that it understated the impact on wholesalers of a comprehensive patient package inserts program. The final regulatory analysis includes estimates of wholesaler's handling costs.

68. Several comments suggested that patient package inserts requirements would result in increased patient demands on the time of physicians to answer questions prompted by the inserts. One commenter anticipated that 0.5 percent of all patients who receive patient package inserts will return to the prescribing physician's office because of them. The comment suggested that the agency's consideration of the economic impact of the regulation should account for these additional costs.

The agency notes that the evaluation of the limited implementation program will seek data on the effects of patient package inserts on patient/practitioner encounters, including questions, telephone calls, and revisits to physicians. As discussed below in FDA's regulatory analysis, however, evidence to date from an FDA-sponsored study of oral contraceptive patient labeling suggests that patient package inserts create a net decrease in patients' demands on the practitioners' time.

69. Many comments disagreed with the agency's estimates of the costs to pharmacists for receiving, storing, retrieving, and dispensing patient package inserts. A comment suggested that to store them, pharmacies would have to acquire a minimum of two filing cabinets. Other comments suggested that the storage problems caused by the regulations would force pharmacies to remodel their workspace. Estimates of the costs of remodeling ranged up to $10,000 per pharmacy. Comments criticized the agency's failure to estimate the costs of pharmacists' time in addition to the time of pharmacy

clerks. A comment suggested that to verify the distribution of patient package inserts, pharmacies would have to develop systems to document receipt by the patient. Several comments suggested that the patient package inserts regulations would result in significantly increased demands upon the time of pharmacists to permit them to counsel patients about the information contained in them. Other comments also suggested that the patient package inserts regulation would lead some patients to return their prescription drug product for refund and that the costs of refunds would be borne by the pharmacist.

The agency does not agree that the proposed regulations would compel all pharmacies to remodel their space, although this may be the case for some pharmacies. Because the final regulations are limited in their implementation, and FDA plans an extensive evaluation, including observation of storage and handling by pharmacies, before deciding whether to expand their scope, the agency is not now willing to estimate pharmacy costs for a full patient package inserts program. The final regulatory analysis contains estimates of storage costs for the initial program and estimates of the costs of pharmacists' supervision of patient package insert dispensing. The final regulatory analysis also considers the potential extra demands on pharmacists' time and the potential costs associated with returned prescriptions.

Because the regulations do not require pharmacies to establish recordkeeping systems to document distribution of patient package inserts, the agency does not agree that the cost of such systems should be included in a regulatory analysis. Even if such a system is adopted, it should not significantly increase pharmacy costs.

70. Several comments claimed that the cost of making patient package inserts available to institutionalized patients (for example, inpatients in hospitals and residents of skilled nursing facilities) through the maintenance of a system such as a set of compendia, and the updating of the contents of the compendia, would all contribute to increased costs for health care institutions. Additionally, comments complained that the agency failed to consider costs incurred in developing procedures to handle patient package inserts, to notify patients of the availability of patient package inserts upon admission, and to assure the availability of them throughout a patient's stay.

Because estimated costs to health care institutions comprise a relatively small part of the total estimated costs of the patient package inserts program, the agency is not persuaded that the omission of institutional burdens cited in the comments made a significant difference in the estimated total costs of the program. Nevertheless, the final regulatory analysis includes consideration of the additional burdens in an attempt to provide a more comprehensive estimate of the costs to health care institutions.

71. One comment claimed that the proposed regulation would place a disproportionate cost burden on small independent pharmacies. The comment urged that the agency review the relative burdens of the regulation on pharmacies of various sizes.

The possibility of disproportionate burden on small independent pharmacies may be relevant in rare cases, for example, if a particular small pharmacy is required to remodel space to accommodate patient package inserts. The agency believes, however, that in general the costs to pharmacies are commensurate with numbers of prescriptions dispensed. The agency will assess the effects of the regulations on pharmacies of various sizes during the evaluation of the program.

72. Many comments critized the draft regulatory analysis for overlooking a number of cost factors including the costs of enforcing the regulation, costs involved in updating and revising patient package inserts, and the increased costs due to inflation. Some comments faulted the agency for failing to consider the costs to the government of reimbursement to pharmacists under the medicaid program.

The agency agrees that costs of updating and revising patient package inserts should have been included in the draft regulatory analysis. But the agency does not believe those costs will occur to any substantial degree during the agency's initial implementation program. The agency also notes that enforcement costs were purposely excluded because these costs will be absorbed within resources currently available. Also, the omission of inflation factors was intentional, and consistent with established cost accounting principles, although the agency inadvertently omitted noting that all estimates were in 1979 dollars and that such base year citations are accepted practice. Finally, the agency advises that medicaid reimbursement costs shift the burden from the patient to the taxpayer, but do not increase total costs of the program.

73. A number of comments criticized the agency for failing adequately to assess and quantify the potential benefits of the patient package inserts regulation. The comments suggested that in the absence of such an attempt to quantify benefits, the agency could not justify the regulations. Moreover, several comments suggested that the agency's failure to quantify the potential benefits from the alternatives to the agency's proposed program makes it impossible to determine whether the proposed patient package inserts regulations are better suited than the alternatives to achieve the agency's intended results. One comment suggested a method of quantification of benefits that permits a rough estimation of the range of effects.

Available studies, experience and other data demonstrate that patient package inserts will: (1) Reduce prescription drug use because of proper use of initial prescriptions, (2) result in fewer visits to health care professionals, (3) result in fewer hospital admissions for avoidable adverse drug reactions or therapeutic failures due to noncompliance, and (4) cause fewer work days to be lost due to avoidable adverse drug reactions. Precise quantification of these benefits, seen in other but more limited patient information programs, must, of course await detailed evaluation of the program which is being applied to the 10 selected drugs or drug classes.

The agency emphasizes that its inability to quantify with precision the benefits of the yet-to-be implemented program should not be interpreted as skepticism that the benefits will accrue. Available evidence makes clear that informed patients will contribute materially to improvements in health. The agency also believes that by providing patients with important information about prescription drugs, the overall health care system will be supported and advanced. The final regulatory analysis, therefore, presents (and can only be expected to present) an illustration of the benefits of modest improvements in rates of compliance with prescribed therapy and of avoidance of severe adverse reactions.

Regulatory Analysis

In Accordance with Executive Order 12044, FDA has prepared the following regulatory analysis of these final regulations. A copy of the regulatory analysis, including sources for estimates, is on file in the FDA Hearing Clerk's office.

The agency's analysis is confined to estimating the effects of patient package inserts for the first 10 drugs or drug classes. FDA intends, however, to prepare a comprehensive regulatory

analysis for public comment before any extention of the program beyond the initial phase.

FDA believes the analysis is responsive to many of the suggestions made in comments on the draft regulatory analysis. The agency has modified a number of the original estimates and added estimates of effects that had been omitted. Thus, the analysis includes revised estimates of printing and internal review costs to manufacturers and of storage and administrative costs to pharmacies. The agency has added estimates of costs of manufacturer and wholesaler distribution of patient package inserts, reconsidered certain indirect costs, considered costs to small businesses, and made a rough appraisal of benefits.

These changes do not, however, reflect significant improvement in the basic data available to support the cost estimates. That must await the results of the agency's evaluation of the initial implementation program. The projections reflect revised assumptions both to accommodate comments and to over rather than under-estimate costs. In this context, it is important to note that the current cost estimates for the limited 10-drug program do not lend themselves to extrapolation to the costs of patient package inserts for all drugs.

FDA intends to continue what has become an extensive evaluation of patient package inserts. The evaluation will incorporate analyses of the actual effects of the required patient package inserts, including collection of data to measure economic effects. In addition, the agency plans to incorporate data obtained from a variety of other sources relevant to costs and benefits of alternative distribution and dispensory schemes for patient labeling. The agency will collect, organize, and draw conclusions from both its own directed research projects and from privately sponsored research studies of experience with mandatory patient labeling. After a full evaluation has been made, including a public comment period, the agency will consider the following options, and others, to plan the further implementation of the patient package insert program: (1) Whether and to what degree the agency should increase or reduce the number of drugs covered, (2) whether to include coverage of refilled prescriptions, (3) whether alternative delivery systems should be required or permitted, (4) whether voluntary information systems can satisfy consumer needs, and (5) whether the current regulation can be improved by building additional standardization or flexibility into distribution, handling, or delivery of patient package inserts.

Economic Consequences of Initial Implementation Phase

The first phase of the patient package inserts program will cover new prescriptions for only 10 drugs or drug classes. In 1979, 54,000 pharmacies dispensed approximately 245 million new and refilled prescriptions for about 400 manufacturer-specific versions of these drugs and drug classes. Approximately 120 million of these were new prescriptions to which the patient package inserts regulations would apply. Thus, new prescriptions of these drugs and drug classes account for about 8 to 9 percent of the 1.4 billion total prescriptions dispensed per year.

FDA estimates that during the first 3 years the patient package inserts regulation will have total annual costs of $21.0 million. Assuming that these costs pass through in their entirety to the consumer, and that they will be spread equally across both new and refill prescriptions (although patient package inserts are not required for refill prescriptions), they would result in a price increase for the drugs subject to the regulation during the first 3 years amounting to 9 cents for new and refilled prescriptions. If the costs are applied only to new prescriptions, they would amount to about 18 cents per prescription for a drug subject to the regulation.

The agency derived its cost estimates from direct and indirect costs to prescription drug manufacturers, distributors, retail pharmacies, physicians, and hospitals and nursing homes. FDA and other governmental costs are not included because they do not add costs to the economy. FDA costs for writing guideline patient package insert texts, enforcement, and evaluation should not require any additional budget allocation to the agency. For example, FDA Bureau of Drugs staff report that writing guidelines and evaluating proposals which even generally conform to the guidelines will be far less time consuming than responding, on an ad hoc basis, to inquiries and original patient package insert proposals. Medicaid reimbursement, to the extent it occurs, would transfer to the public (and therefore to the taxpayer) the relevant costs here counted in the private sector estimates.

Following is a summary of the costs projected for each of the private sectors of the economy. The estimates represent annual recurring costs or annualized capital costs, as appropriate. All figures are in 1979 dollars unless otherwise noted.

Summary of Private Sector Costs

[Dollars in millions]

Manufacturing sector total	$4.6
Printing	3.6
Distribution	0.5
Internal administrative	0.5
Distributor/wholesaler sector total	4.9
Retail pharmacy sector total	11.0
Storage equipment	0.7
Losses due to displaced sales	2.8
Administrative	7.5
Returned prescriptions	(1)
Consultations	(1)
Hospitals/nursing home total	0.5
Physician total	(1)
	21.0

[1] No additional costs estimated.

Manufacturers' Costs

The regulation places responsibility on the pharmaceutical industry for printing and distributing patient package inserts. In addition, pharmaceutical firms may incur costs for internal review of patient package insert texts and administrative costs associated with printing and handling.

Manufacturers will be required to print patient package inserts in sufficient numbers to cover the selected 10 drugs or drug classes, for which retail pharmacies dispensed approximately 120 million new prescriptions in 1979. The agency assumes this volume of retail prescriptions will continue for 3 years. Estimates of printing costs from a Washington, DC, area print shop and two pharmaceutical manufacturers now voluntarily supplying patient inserts suggest that they will cost from 1 to 2 cents apiece, depending on colors, paper, and other variables. Because it is likely that extra patient package inserts will be needed to ensure adequate supplies (requests for inserts for refills, loss, allowances for some Spanish language texts, etc.), FDA assumes that manufacturers will print 180 million patient package inserts or 50 percent additional. At 2 cents per insert, the estimated maximum printing cost is $3.6 million.

The agency estimated manufacturer distribution costs by assuming that manufacturers, or printers as their agents, would ship patient package inserts in 1-pound units, each containing 450 inserts printed on "bible paper." On this basis, there would be about 400,000 shipments for the 180 million inserts. The commercial cross-country shipping rate for a 1-pound package is about $1.35, and manufacturer distribution costs are projected at $0.5 million. Because alternative distribution methods are possible, the assumptions underlying this estimate are speculative, but the agency believes they provide

adequately for the costs of physical distribution of patient package inserts.

The agency projects the annual administrative cost to pharmaceutical manufacturers to be $0.5 million. FDA recognizes that some costs are attached to the process of acquiring and perhaps adapting guideline texts and preparing these for printing and distribution. The agency assumes these costs will not exceed one-tenth of a $40,000 person-year for each of the nearly 400 manufacturer-specific products that comprise the 10 drugs or drug classes covered by the regulation and spread the total cost of $1.6 million over 3 years.

Distributors' Costs

Where patient package inserts are not distributed directly from manufacturers to retailers, the agency assumes that they will pass from manufacturers to distributors and then to retailers. Thus, distributors will incur costs for handling and shipping patient package inserts.

Pharmaceutical manufacturers ship drugs to wholesalers, hospitals, and retailers. Drugs shipped directly to hospitals are not considered in the calculation of patient package inserts distribution costs because hospitals are not required to distribute them in a retainable form. Excluding drugs shipped to hospitals, manufacturers ship about two-thirds of their drugs to wholesalers and one third to retailers. Some retail chain drug stores operate their own warehouses, and they also will have some distribution costs. FDA assumes that no more than half of the retail shipments follow that pattern. Thus, the agency believes that each year 16.7 percent, or 30 million of the 180 million patient package inserts will be shipped directly to retail drug stores, and distributors will receive and ship the remaining 150 million package inserts to pharmacies. Although manufacturers and distributors may find it advantageous to ship patient package inserts for some drugs to large retail outlets in the same average shipment units in which manufacturers and distributors receive them, i.e, 1 pound packages of 450 inserts, manufacturers and distributors will probably ship smaller units to retailers, perhaps as few as 10 to 20 inserts at a time. Therefore, FDA assumes an average shipping unit of 50 inserts for the 150 million labels distributors send to retailers. If these 3.0 million shipping units are handled at the same average cost that distributors experience for drug shipment transaction ($1.12), the cost of handling patient package inserts will total $3.4 million per year.

Transportation costs may be minimal if the patient package inserts accompany drug deliveries. Assuming that inserts handled by distributors are shipped separately, an additional unit shipping cost of $0.50 for 3.0 million packages of about one-quarter pound would total $1.5 million. Thus, FDA estimates total costs for distributors to be $4.9 million.

Costs to Pharmacies

The initial program directly affects pharmacies and pharmacists in a number of ways. They will have costs for storing the patient package inserts. Also, if storage of the patient package inserts displaces profitable sales, they will forgo some profits and loss of contribution to overhead. Pharmacies will have some administrative costs for filing, retrieving, and dispensing the inserts. Finally, pharmacies may bear the costs of returned prescriptions and extra patient/pharmacist consultations, if these indirect effects occur. Nevertheless, our analysis reveals that the cost of dispensing patient package inserts during the initial program will average approximately $200 per pharmacy.

Because of the limited scope of the first phase of the patient package inserts program, pharmacies are likely to arrange for storage of the inserts without major renovation or remodeling. One possible arrangement is an open file rack (to be placed on a counter or table). The cost of a file rack (about $10) and 100 file folders ($9) to hold 600 inserts for approximately 50 different texts is about $13 per pharmacy per year, if the cost of the rack is spread over 3 years. FDA believes that allowance for 50 different texts accommodates texts from different manufacturers as well as texts in both English and Spanish in cases were the pharmacy serves both populations. Because there are approximately 54,000 retail pharmacies, FDA estimates the total cost of storage files is $0.7 million.

The file rack may displace space in the pharmacy that would otherwise hold saleable goods. If the turnover of goods cannot be increased elsewhere in the pharmacy area to offset the loss of this space, the file rack will impose opportunity costs for lost sales. Sales per square foot of pharmacy space averaged $467 in 1978, and the opportunity cost of displace sales per square foot is $103—the value of sales less the cost of goods sold and the cost of wages. The file rack requires a base area of about 1 square foot and a vertical space of not more than 2 feet. This counter-top design would not preclude storage or display of saleable goods below or above the file. Thus, it appears reasonable to charge the file rack with a displacement of one-half square foot. The estimated total cost for 54,000 pharmacies is therefore $2.8 million.

Pharmacy administrative costs for the patient package inserts program will include filing, retrieving, and dispensing activities. To estimate these costs, FDA allowed 30 seconds per transaction, a reduction from the 50-second figure used in the draft regulatory analysis to reflect the simpler filing and retrieval procedures resulting from the application of the regulations to fewer drugs. FDA assumes the cost of this time to cover a weighted average of 25 percent of pharmacist's time at $15 per hour and 75 percent of a pharmacy clerk's time at $5 per hour. That is, FDA recognized that the professional pharmacist may be involved directly in the transaction or may supervise the activity, but that generally the activities will be performed by an assistant. The total estimated administrative costs, therefore, are $7.5 million (120 million new prescriptions, a patient package insert "processing" time of 30 seconds and an average labor cost of $7.50 per hour).

FDA found no basis for including a cost for additional returned prescriptions. One study that sought data on the incidence of prescription returns and additional consultations with pharmacists revealed no prescription returns for 400 patient package inserts dispensed. Another study found 3 returns in 1,700 prescriptions dispensed. The return rate in this study (0.2 percent) actually represents a smaller return rate than a "baseline" return rate (0.5 percent) for drugs without patient package inserts reported to FDA by a pharmacy chain. These studies suggesting a lower return rate with patient package inserts cannot be considered definitive. On the other hand, FDA has no evidence to suggest that prescription returns will increase. Indeed, some State laws prohibit the resale of returned prescriptions, and thus pharmacists frequently do not accept them.

Regarding the possibility of additional pharmacists' consultation time that may be generated by patient package inserts, FDA found little evidence to document higher consultation levels than might be expected without them. The study cited above found there were three minor (2 minute) consultations for 400 patient package inserts dispensed. In view of the low consultation rate found in that study and because the agency believes the baseline is greater than zero, the

agency finds no basis for projecting either additional costs or savings because of this effect of patient package inserts on consultations.

Health Care Institutions' Costs

Hospitals and nursing homes will bear the costs of informing patients about the availability of information about prescription drugs and assuring that the information is available.

The institutions may satisfy these requirements, for example, by placing a reference book at each nursing station and by revising the admitting form to include a paragraph on the availability of the information. FDA assumes that the unit cost per nursing station for a binder or folder of required patient labeling will not exceed $1. The estimated total number of nursing stations in hospitals and nursing homes is 140,000, assuming that there is one station for every 20 beds. There are about 2.8 million beds (1.4 million in nursing homes and 1.4 million in hospitals). The estimated one-time annualized cost for revised admitting forms is $15 (new printing plate for one page of the form) for each of the 22,000 institutions (short and long-term hospitals and nursing homes). Therefore, the total estimated cost to institutions is $0.5 million.

Physicians' Costs

The agency does not attribute additional costs for physician consultations to patient package inserts because the only available study suggests a net decrease in physician contacts. In a nationwide survey of over 2,500 current and former oral contraceptive users, respondents were asked if patient information increased or decreased their contacts with physicians. About 76 percent reported no change in incidence of contacts, 5 percent reported an increase, and 10 percent reported a decrease. The remaining 9 percent of the respondents said they did not know or they did not answer the question. FDA is not aware of any additional research findings regarding the relationship between patient package inserts and physician contacts.

Small Business Costs

The agency believes there are three reasons why implementation of the first phase of the final rule is unlikely to affect small businesses significantly or disproportionately, or to alter their ability to remain competitive. First, the total costs, which are commensurate with the small scale of the first phase of the program, are small. Second, the costs are nearly all variable costs, tied to the volume of prescriptions handled, and involve no meaningful dollar investment in plant or equipment. Third, manufacturers, distributors, and pharmacies can reasonably expect to pass these costs on to the consumer.

FDA recognizes that small businesses may be more significantly affected when and if the patient package inserts program is extended to many more drugs. The agency's evaluation of the initial implementation program and other research projects will address small business effects specifically.

Benefits

FDA believes that increased patient understanding and awareness of the need for observing precautions and following directions in taking prescription drugs will produce health benefits by reducing the incidence or minimizing the effects of the following kinds of untoward effects:

Excessive or inappropriate use of drugs.
Adverse drug reactions and adverse drug-drug and drug-food interactions.
Therapeutic failures due to poor compliance with drug regimens.

Such effects, which are at least partly avoidable with adequate patient knowledge, may result in additional visits to physicians, prolonged or additional treatment, hospital admissions or prolonged hospital stays, serious drug-induced disability, or death. There are also economic costs to consumers and society in the form of lost work time, reduced productivity, and wasted expenditures on drugs whose efficacy is cancelled or reduced by inappropriate or improper use.

A number of studies (Refs. 1–27) indicate that printed drug information distributed to patients improves patient knowledge and compliance. Nineteen of the studies (Refs. 1 through 19) showed that written patient information significantly improves patient knowledge. Improved knowledge is often achieved for information such as precautions, warning, and side effects. This information is important to aid the patient in taking drugs properly and improving decisions the patient makes in monitoring the course of treatment (i.e., when it is important to contact the physician).

Twelve of 27 studies (Nos. 1, 2, 8, 13, 15, 20–24, 26, and 27) showed that written information on complaince with therapeutic regimens significantly improves patient compliance. Seven other studies (Nos. 3, 4, 7, 11, 12, 16, and 25) showed that written communication did not significantly improve compliance, though some marginal improvements did often occur most frequently for drugs used for short periods of time (e.g., antibiotics) or when written information was used in conjunction with professional counseling or some other supportive technique.

In addition to these studies, which are based upon select populations of patients, FDA has experience with patient package inserts for a few other drugs, notably oral contraceptives and estrogenic drugs. One of the purposes of the estrogenic patient package inserts was to call attention to a need to avoid long-term use of the drug, a factor which had been linked to an increased incidence of cancer. It seems reasonable to believe that patient package inserts contributed to decreased use of this drug (as reflected by sales data) and thus reduced the number of patients at risk of developing cancer (No. 27).

Based upon the results of these studies and experience with patient package inserts, FDA believes that the availability of patient information will translate into tangible health and economic benefits for the consumer. Although information does not always lead to behavior changes, the agency believes that the available evidence supports the agency's position that compliance with drug regimens may be significantly improved by patient package inserts.

FDA believes major potential benefits may result from patient package inserts that reduce patients' rates of noncompliance with prescribed treatment programs. Of the 120 million new prescriptions annually that will be covered initially by the regulation, 75 million are for drugs for which noncompliance is a problem. Based on a noncompliance rate of approximately 40 percent, patient failure to comply would occur with about 30 million new prescriptions each year. Prescription drugs, which represent a small part of total health care costs, are highly cost-effective. Correctly prescribed and properly used, they frequently forestall sickness, death, disability and their associated health care and economic costs.

The possibility of significant benefits from improved compliance may be illustrated by a concrete example. FDA conservatively estimates the costs of certain events associated with noncompliance as follows:

Workday loss	$45
Hospital day	250
Revisit to physician	15
Refilled prescription	7

Assuming 30 million noncomplying prescription uses per year for the 10 drugs and drug classes covered by the

regulations, the agency believes the following incidence ranges and total costs for specified consequence of noncompliance are plausible:

	Assumed incidence (percent)	Cost (dollars in million)
"Unnecessary" prescription refills	10-20	21-42
One additional physician visit	5-10	22.5-45
One additional workday lost	5-10	67.5-135
Two additional workdays lost	5-10	135-270
Hospitalization (1-2%):		
One day	0.25-0.5	18.75-37.5
Two days	0.50-1.0	75-150
Three days	0.25-0.5	56.25-112.5
Total		396.0-792.0

If patient package inserts resulted in a 10-percent reduction of noncomplying prescription uses, benefits of $40-$79 million per year might be realized, a 5-percent improvement might produce benefits of $20-$40 million, and so on.

The agency notes that these figures are only illustrative. FDA believes, however, that the assumptions used are conservative and notes also that the examples used to take no account of the potentially catastrophic effects of noncompliance with prescribed treatment programs, which include avoidable death, permanent disability and prolonged hospitalization. The costs of these more severe consequences, at even very low incidence rates, could greatly exceed the costs illustrated here. Thus, the potential benefits of patient package inserts may be greater than those illustrated in this document.

References

(1) Madden, E. E., "Evaluation of Outpatient Pharmacy Patient Counseling," *Journal of the American Pharmaceutical Association*, 13:437-443, 1973.

(2) Mattar, M. E., J. Markello, and S. J. Yaffee, "Pharmaceutic Factors Affecting Patient Compliance," *Pediatrics*, 54:101-108, 1974.

(3) Eklund, L. H. and A. Wessling, "Evaluation of Package Enclosures for Drug Package," *Lakaridingen*, 73:2319-2320, 1976.

(4) Suveges, L., "The Impact of Counseling by the Pharmacist on Patient Knowledge and Compliance (abstract)," McMaster Symposium on Compliance with Therapeutic Regimens, Hamilton, Ont., Canada, 1977.

(5) Udkow, G. L., L. Lasagna, M. Weintraub, and Z. Tamoshumas, "The Safety and Efficacy of the Estrogen Patient Package Insert, A Questionnaire Study," *Journal of the American Medical Association*, 242(6):536-539, 1979.

(6) Clark, C. M. and E. W. Bayley, "Evaluation of the Use of Programmed Instruction for Patients Maintained on Warfarin Therapy," *American Journal of Public Health*, 62:1135-1139, 1972.

(7) Sackett, D. L., R. B. Haynes, E. S. Gibson, et al, "Randomized Clinical Trial of Strategies for Improving Medication Compliance in Hypertension," *Lancet*, 1:1205-1207, primary 1975.

(8) McKenney, J. M., J. M. Slining, H. R. Henderson, et al., "The Effect of Clinical Pharmacy Services on Patients with Essential Hypertension," *Circulation*, 48:1104-1111, 1973.

(9) Bentz, P. M. and S. G. Deliganis "Protocol: Patient Medication Education," *Northwest Medical Journal*, 3:33-40, 1974.

(10) Rosenberg, S. G., "Patient Education Leads to Better Care for Heart Patients," *HSMA Health Reports*, 86:793-802, 1971.

(11) Kanouse, D. E. and L. A. Morris, "Patient Package Inserts: Effects on Patient Knowledge, Attitudes and Behavior," Paper Presented at the APHA Meeting, Los Angeles, CA, October 1978.

(12) Clinite, J. C. and H. F. Kabat, Improving Patient Compliance," *Journal of the American Pharmaceutical Association*, 16:74-76, 1976.

(13) Beardsley, R. S., C. A. Johnson, and G. Wise, "Privacy as a Factor in Patient Counseling," *Journal of the American Pharmaceutical Association*, 17:366-368, 1977.

(14) Weibert, R. T., "Patient Package Inserts: Potential Distribution Problems," *Drug Information Journal*, 11:45-49, 1977.

(15) MacDonald, E. T., J. B. MacDonald, and M. Phoenix, "Improving Drug Compliance After Hospital Discharge," *British Medical Journal*, 2:618-621, 1977.

(16) Newcomer, D. R. and R. W. Anderson, "Effectiveness of a Combined Drug and Patient Teaching Program," *Drug Intelligence and Clinical Pharmacy*, 8:374-381, 1974.

(17) Paulson, P. T., R. Bauch, M. L. Paulson, and D. A. Zilz, "Medication Data Sheets—An Aid to Patient Education," *Drug Intelligence and Clinical Pharmacy*, 10:448-453, 1976.

(18) Ellis, D. A., J. M. Hopkin, A. G. Leitch, and J. Crofton, "'Doctors' Orders': Controlled Trial of Supplementary, Written Information for Patients," *British Medical Journal*, 1:456, 1979.

(19) Crichton, E. F., "Patient Recall of Medication Information (abstract)," McMaster Symposium on Compliance with Therapeutic Regimens, Hamilton, Ont., Canada, 1977.

(20) Sharpe, T. R. and R. L. Mikeal, "Patient Compliance with Antibiotic Regimens," *American Journal of Hospital Pharmacy*, 31:479-484, 1974.

(21) Lima, J., L. Nazarian, E. Charney, and C. Lahti, "Compliance with Short-Term Antimicrobial Therapy," *Pediatrics*, 57:383-386, 1976.

(22) Linkewich, J. A., R. B. Catalano, and H. L. Flack, "The Effect of Packaging and Instruction on Outpatient Compliance With Medication Regimens," *Drug Intelligence and Clinical Pharmacy*, 8:10-15, 1974.

(23) Colcher, I. S. and J. W. Bass, "Penicillin Treatment of Streptococcal Pharyngitis," *Journal of the American Medical Association*, 222:657-659, 1972.

(24) Ferencz, N., "The Effect of the Estrogen Patient Package Insert on Compliance with Physician Instructions," Unpublished manuscript.

(25) Hecht, A. B., "Improving Patient Compliance by Teaching Outpatients," *Nursing Forum*, 8:112-129, 1974.

(26) Myers, E. D. and E. J. Calvert, "Knowledge of Side Effects and Perseverence with Medication," *British Journal of Psychiatry*, 132:526-527, 1978.

(27) Morris, L. A., Estrogenic drugs: "Patient Package Inserts" chapter in L. Morris, M. Morris, and I. Barofsky (eds.) "Product Labeling and Health Risks, Banbury Reports," 6, Cole Springs Harbor, NY, forthcoming.

Therefore, under the Federal Food, Drug, and Cosmetic Act (secs. 201, 502, 503, 505, 506, 507, 701, 52 Stat. 1041 as amended, 1050-1053 as amended, 1055-1056 as amended, 55 Stat. 851, 59 Stat. 463 as amended (21 U.S.C. 321, 352, 353, 355, 356, 357, 371)) and the Public Health Service Act (sec. 351, 58 Stat. 702 as amended (42 U.S.C. 262)) and under authority delegated to the Commissioner (21 CFR 5.1), Chapter I of Title 21 of the Code of Federal Regulations is amended by adding new Part 203 to read as follows:

PART 203—PATIENT PACKAGE INSERTS FOR PRESCRIPTION DRUG PRODUCTS

Sec.

203.1 Requirements for patient package inserts.
203.3 Definitions.
203.20 Content of patient package inserts.
203.22 Printing specifications for patient package inserts.
203.23 Availability of FDA guideline patient package inserts.
203.24 Distribution and dispensing of patent package inserts.
203.25 Dispensing requirements for health care institutions.
203.26 Exemptions from patient package inserts dispensing requirements.
203.30 Effective dates.
203.31 Drugs which require patient package inserts. [Reserved]
203.35 Alternative dispensing of patient package inserts.

Authority: Secs. 201, 502, 503, 505, 506, 507, 701, 52 Stat. 1041 as amended, 1050-1053 as amended, 1055-1056 as amended, 55 Stat. 851, 59 Stat. 463 as amended (21 U.S.C. 321, 352, 353, 355, 356, 357, 371)); sec. 351, 58 Stat. 702 as amended (42 U.S.C. 262), and as otherwise noted.

§ 203.1 Requirements for patient package inserts.

(a) This part sets forth requirements for patient package inserts for prescription drug products. A prescription drug product that does not comply with all applicable regulations in this part is misbranded under section 502 of the Federal Food, Drug, and Cosmetic Act (21 U.S.C. 352); and the drug product, as well as the person who is responsible for the failure to comply, is subject to regulatory action.

(b) References in this part to regulatory sections of the Code of Federal Regulations are to Chapter I of Title 21, unless otherwise noted.

§ 203.3 Definitions.

The following definitions apply to this part:

"Dispense" means the act of delivering a prescription drug product to a patient or an agent of the patient either:

(a) By a practitioner or an agent of a practitioner, either by direct administration or by transfer to the patient (or agent of the patient) for later administration; or

(b) By a pharmacist or an agent of a pharmacist under a lawful prescription of a practitioner.

"Dispenser" means a person who dispenses a drug product.

"Distribute" means the act of delivering (other than by dispensing) a drug product to any person.

"Distributor" means a person who distributes a drug product.

"Drug product" means a drug that contains the active drug ingredient, alone or combined with one or more components in a finished dosage form capable of being dispensed to a human (except for packaging, labeling, and final manipulation required immediately before dispensing).

"Patient" means any individual with respect to whom a drug product is intended to be, or has been, used.

"Manufacture" means the production, preparation, propagation, compounding, processing, or packaging into containers of a drug product, or the placing of labeling on a drug product. The term "manufacture" does not include the compounding of a drug product by a practitioner or pharmacist necessary for, and as an incident to, preparing the drug product for dispensing to a patient.

"Manufacturer" means (except as used in § 203.20(b)(11)(i)) a person who manufactures a drug product.

"Pharmacist" means an individual licensed, registered, or otherwise permitted by the jurisdiction in which the individual practices to dispense drug products on prescription in the course of professional practice.

"Practitioner" means an individual licensed, registered, or otherwise permitted by the jurisdiction in which the individual practices to prescribe drug products in the course of professional practice.

§ 203.20 Content of patient package inserts.

(a) Patient package inserts are required to meet all of the following conditions:

(1) The patient package inserts are written in English, are in nontechnical language, and are not promotional in tone or content.

(2) The patient package inserts are based primarily on the professional labeling for the drug product under § 201.100(d).

(3) The patient package inserts comply with the requirements of paragraph (b) of this section.

(b) Except as provided in paragraph (c) of this section, patient package inserts for a prescription drug product are required to contain the following:

(1) If the patient package inserts apply to only one drug product, the established name of the drug, or for a licensed biological product, the proper name of the product. If the patient package inserts apply to a class of drug products, the name of the drug class. The patient package inserts may also bear the brand name and a physical description of the drug product or products to which it applies.

(2) A summary section containing a short statement of the drug product's common uses, how to use it properly, situations when it should not be used, its serious adverse reactions and potential safety hazards, and a statement that the patient should read the patient package insert and keep it for future use.

(3) A statement about the proper use of the drug product that identifies its indications for use and includes a summary of the action of the drug or the reason for taking it. Patient package inserts may not identify an indication for use of the product unless the indication is identified in the professional labeling for the product required under § 201.100(d). Patient package inserts may contain the verbatim statement that the drug may be used "for other conditions as determined by your doctor," unless the drug has no significant use outside of the indications identified in the patient package insert. If there is a common belief that the drug product may be effective for an indication that is not included in the drug product's practitioner labeling and the preponderance of the evidence related to that indication suggests that the drug is ineffective for it, the patient package inserts are required to state that there is a lack of evidence that the drug is effective for that indication.

(4) Information which the patient should provide the practitioner before taking the drug, which includes the circumstances under which the drug product should not be used for its labeled indication (its contraindications).

(5) A statement of serious adverse reactions and potential safety hazards that may result from use of the drug about which patients should inform their practitioner or which might help the patient evaluate the benefits and risks of the drug. Patient package inserts are required to contain specific warning related to a known use of the drug that is not included in the professional labeling for the product under § 201.100(d) and for which substantial evidence of the effectiveness of the drug does not exist, if use of the product for that indication is associated with a serious risk or hazard. Serious adverse reactions or safety hazards concerning the use of a drug (particularly those which may lead to death or serious injury) are required to be placed in a prominently displayed box, printed in boldface type, or be otherwise emphasized.

(6) A statement or statements of cautions the patient should observe while taking the drug, including:

(i) A statement that identifies activities (such as driving or sunbathing), and drugs, foods, or other substances (such as tobacco or alcohol) that the patient should avoid because their interactions with the drug are known, likely to occur, and likely to have clinical significance.

(ii) A statement of the risks to the mother and unborn child from the use of the drug during pregnancy, particularly if the drug has a recognized use during labor or delivery. The statement must include the long-term effects of the drug on the child, if any. If data on the immediate and long-term effects of the drug on the child are unavailable, a statement that the effects of the drug on the child are unknown. The term "recognized use" includes a common and widespread use of the drug during labor and delivery, whether or not the drug product is labeled for that use.

(iii) A statement of available data and information about excretion of the drug in human milk and the associated risks to the nursing infant.

(iv) A statement of specific pediatric indications, if any. If the drug has specific hazards associated with its use in pediatric patients, a statement of the risks.

(v) A statement of special precautions, if any, that apply to the safe and effective use of the drug product in other identifiable patient populations, such as elderly patients.

(vi) A statement of the available information about whether the drug is carcinogenic, mutagenic, or whether it affects reproduction, and, if the statement refers specifically to animal studies, an explanation of the relationship of the data to risk in humans.

(7) A statement of the risks, if any, to the patient of developing tolerance to or dependence on the drug.

(8) A statement of what the patient should do in case of overdosage of the drug or if the patient misses a scheduled dose of the drug product.

(9) A statement of possible side effects from the use of the drug which are clinically significant and frequently occurring, and which the patient can reasonably be expected to detect, or which might help the patient evaluate the benefits and risks of the drug product. The list of side effects may be categorized and summarized by organ system, by severity of the reaction, by frequency, by preventative or curative actions the patient may take, or by a combination of these methods. The approximate frequency of each side effect may be expressed in rough estimates or orders of magnitude.

(10) Information about the safe and effective use of prescription drug products, including:

(i) A statement that the drug product has been prescribed for the sole purpose of treating the patient's condition and must not be used for other conditions or given to others.

(ii) A statement that the safety and effectiveness of the drug product depend upon the patient's taking the drug product as directed.

(iii) A statement that the patient's pharmacist or practitioner may have a more technical leaflet about the drug product that the patient may ask to review.

(11) The following information about the drug product and the patient package inserts:

(i) The name and place of business of the manufacturer, packer, or distributor (as required for the label of the drug product under § 201.1), or the name and place of business of the dispenser of the product.

(ii) If the drug product is not for oral use, the route of administration.

(iii) A statement of special handling and storage conditions that apply to the drug product.

(iv) The date, identified as such, of the most recent revision of the patient package insert placed prominently immediately after the last section of the labeling.

(c) The Food and Drug Administration may exempt the patient package inserts for a particular drug product, or class of drug products, from any requirement of paragraph (b) of this section, if the information is clearly inapplicable to the patient's choice or use of the drug product, or the Food and Drug Administration concludes that the application of the requirement is not necessary for the protection of the public health. The Food and Drug Administration's conclusion that patient package inserts for a prescription drug product are exempt from any requirement of paragraph (b) of this section will be stated in the Food and Drug Administration's guideline patient package inserts available for the product under § 203.23, as part of the approval of a new drug application for the product, antibiotic form 5 or 6, a biologic product license application, or in a document which will be placed on file with the Hearing Clerk. A person may also request an advisory opinion from the Food and Drug Administration under § 10.85 about whether information otherwise required may be omitted from a patient package insert for a drug product or class of drug products.

§ 203.22 Printing specifications for patient package inserts.

Patient package inserts are required to be printed in accordance with the following specifications:

(a) The letter height (lowercase letter "o") may not be less than 1/16 inch.

(b) The body copy may not contain any lightface type, condensed type, small capital letters, or less than 1-point leading.

(c) The Food and Drug Administration encourages persons responsible for patient package inserts for prescription drug products to develop improved formats for patient package inserts through the imaginative use of type face, type size, boldness of type, spacing between lines, ink colors, paper type and color, examples and illustrations, and to produce patient package inserts in languages other than English so that patient package inserts will be more easily read, and better understood and remembered by patients.

§ 203.23 Availability of FDA guideline patient package inserts.

The Food and Drug Administration may prepare and make available guideline patient package inserts for a specific drug or class of drugs. Use of guideline patient package inserts constitutes compliance with § 203.20. A list of available guideline patient package inserts for prescription drug products and copies of guideline patient package inserts for specific drug products are available from the Hearing Clerk (HFA-305), Food and Drug Administration, Rm. 4-62, 5600 Fishers Lane, Rockville, MD 20857. Requests for the list and for copies of guideline patient package inserts should be in writing and directed to that office.

§ 203.24 Distribution and dispensing of patient package inserts.

(a) A manufacturer, distributor, or dispenser may provide to practitioners, pharmacists, other dispensers and consumers copies of patient package inserts that are in addition to the copies of patient package inserts required to be provided under this section.

(1) For a drug product in a bulk container:

(i) Each manufacturer shall provide each distributor to which it ships the drug product patient package inserts in sufficient numbers to permit the distributor to comply with paragraph (a)(1)(iii) of this section.

(ii) Each manufacturer shall provide each dispenser to which it ships the drug product patient package inserts in sufficient numbers to permit the dispenser to provide a patient package insert to each patient to whom the drug product is dispensed under paragraph (b) of this section.

(iii) Each distributor shall provide each dispenser to which it ships the drug product patient package inserts in sufficient numbers to permit the dispenser to provide a patient package insert to each patient to whom the drug product is dispensed under paragraph (b) of this section.

The requirements of this paragraph can be met by the manufacturer or distributor or by any other person on behalf of the manufacturer or distributor. Nothing in this section prohibits a manufacturer or distributor from meeting the requirements with patient package inserts prepared by the distributor or dispenser. The label of each bulk container is required to instruct the dispenser to provide patient package inserts to each patient to whom the drug product is dispensed.

(2) For a drug product in a unit-of-use container, the manufacturer and distributor shall provide a patient package insert in or with each package of the drug product that the manufacturer or distributor intends to be dispensed to a patient.

(3) The manufacturer and distributor shall provide Spanish language patient package inserts that meet the requirements of this part upon request of the distributor or dispenser to whom the drug is shipped.

(b) Each dispenser of a prescription drug product subject to this part shall, when the product is dispensed under a new prescription, provide a patient package insert to each patient (or to an agent of the patient) to whom the product is dispensed, unless the product is dispensed or administered in a health care institution meeting the

requirements of § 203.25, or an exemption applies under § 203.26. The dispenser shall provide the patient package insert directly to the patient (or to an agent of the patient) as a separate leaflet. Nothing in this section prohibits a dispenser from meeting these requirements with patient labeling package inserts by the dispenser, or by a distributor.

(1) Patient package inserts for a drug product dispensed to a patient who is legally incompetent to consent to medical treatment in the jurisdiction where the treatment is provided, for example, a child or a mentally disabled patient, may be provided to the parent or legal guardian of the patient (or to the agent of either).

(2) Patient package inserts for a drug product dispensed to a patient whose primary language is not English may be provided in the patient's primary language.

(3) Patient package inserts for a drug product dispensed to a patient who is blind may be provided in braille.

(c) The dispenser of a prescription drug product shall establish and follow a procedure to ensure that a patient can easily match the correct patient package insert text to the drug product, for example, by placing the prescription number on the patient package insert or placing the drug product's name on the label of the product that is dispensed to the patient.

(d) A dispenser is not subject to section 510 of the Federal Food, Drug, and Cosmetic Act (21 U.S.C. 360) which requires the registration of producers of drugs and the listing of drugs in commercial distribution because of an act performed by the dispenser under this part.

§ 203.25 Dispensing requirements for health care institutions.

(a) A drug product dispensed to an institutionalized patient for use in a health care institution shall be provided with patient package inserts in accordance with either:

(1) The requirements of § 203.24(b), or

(2) A program established by the institution that

(i) Is reasonably calculated to inform patients at the time of admission that patient package inserts for prescription drugs are available, and

(ii) Makes patient package inserts available for reading or retention by any patient at his or her request. Patient package inserts may be provided in accordance with § 203.24(b).

(b) Patient package inserts need not be provided as required by paragraph (a) of this section if the drug product is dispensed to a patient undergoing emergency treatment.

(c) This section does not apply to prescription drugs dispensed to a patient for use outside the institution, such as out-patients or discharged patients. Such prescription drugs are governed by § 203.24(b).

§ 203.26 Exemptions from patient package inserts dispensing requirements.

(a) A drug product is not required to be dispensed with a patient package insert if the (1) drug product is dispensed by refilling an existing prescription or (2) if the prescribing practitioner directs in his or her own handwriting in the prescription that patient package inserts not be provided to the patient or, in the case of an oral prescription, directs that patient package inserts not be provided to the patient and this direction is reduced promptly to writing by the dispenser and filed with the prescription. Notwithstanding these exemptions, the dispenser of a prescription drug product shall provide a patient package insert to any patient who requests it when the drug product is dispensed. This exemption also does not apply if the Food and Drug Administration requires, by notice in the Federal Register, that patient package inserts for a particular drug product be provided to all patients under all circumstances.

(b) A drug product is not required to be dispensed with a patient package insert if the product is dispensed to a patient in the course of emergency treatment outside a health care institution subject to § 203.25.

§ 203.30 Effective dates.

(a) Each prescription drug product is required to comply with the requirements of this Part 203 within 180 days after the publication of a notice in the Federal Register announcing the application of the requirements to a drug or drug class unless a different time period is stated in the notice. When the regulations are applied to a drug or drug class, the agency will add the name of the drug or drug class to § 203.31.

(b) A prescription drug product that is introduced or delivered for introduction into interstate commerce or held for sale after introduction in interstate commerce after the effective date for the product established under paragraph (a) of this section is misbranded under section 502 of the Federal Food, Drug, and Cosmetic Act if it does not comply with the requirements of this part. However, a drug product in the possession of a distributor or dispenser before the effective date for the product is not misbranded if adequate numbers of copies of patient package inserts are furnished to the distributor or dispenser to permit any patient after the effective date to obtain a patient package insert with the product. The requirement that any product be dispensed with patient package inserts, as applied to practitioners who dispense or administer the drug, will not be effective for supplies in their possession on the effective date, but will apply only to supplies received after the effective date.

(c) Holders of approved new drug applications for drug products that are subject to this part shall submit supplements under § 314.8(d) to provide for the patient package inserts required by this part. Establishments holding licenses for the manufacture of biological products shall submit amendments to the Bureau of Biologics under § 601.12 to provide for the labeling required by this part. Holders of approved antibiotic form 5's and 6's shall submit amendments under § 431.16. Unless otherwise provided in the Federal Register notice for the product published under paragraph (a) of this section, the patient package inserts may be put into use without advance approval by the Food and Drug Administration.

(d) This part does not apply to the following:

(1) Isoproterenol inhalation drug products that are subject to § 201.305.

(2) Oral contraceptive drug products that are subject to § 310.501(a).

(3) Oral postcoital contraceptive drug products that are subject to § 310.501(b).

(4) Medroxyprogesterone acetate injection drug products that are subject to § 310.501a.

(5) Intrauterine devices that are subject to § 310.502.

(6) Estrogenic drug products that are subject to § 310.515.

(7) Progestational drug products that are subject to § 310.516.

§ 203.31 Drugs which require patient package inserts. [Reserved]

§ 203.35 Alternative dispensing of patient package inserts.

(a) The Commissioner may, at any time, waive any requirement in this part applicable to the dispensing of patient package inserts (and corresponding distribution practices) on the Commissioner's own initiative or on the petition of an interested person.

(b) An interested person may request the Commissioner to waive such a requirement under the condition that manufacturers, distributors, and dispensers to whom a waiver applies adopt an alternative system of

dispensing patient package inserts. A waiver request is required to be submitted in accordance with 21 CFR 10.30. The waiver request is required to identify the following:

(1) The manufacturers, distributors, or dispensers for whom the waiver is sought,

(2) The specific requirements of this part from which the waiver is sought, and

(3) The time period for which the waiver is sought.

(c) No waiver is effective unless first approved by the Commissioner in writing.

Effective date. This regulation becomes effective October 14, 1980.

(Secs. 201, 502, 503, 505, 506, 507, 701, 52 Stat. 1041 as amended, 1050–1053 as amended, 1055–1056 as amended, 55 Stat. 851, 59 Stat. 463 as amended (21 U.S.C. 321, 352, 353, 355, 356, 357, 371); (sec. 351, 58 Stat. 702 as amended (42 U.S.C. 262)))

Dated: September 8, 1980.

Jere E. Goyan,

Commissioner of Food and Drugs.

[FR Doc. 80-28084 Filed 9-10-80; 3:44 pm]

BILLING CODE 4110-03-M

DEPARTMENT OF HEALTH AND HUMAN SERVICES

Food and Drug Administration

[Docket No. 80N-0370]

Prescription Drugs; Draft Guideline Patient Package Inserts

AGENCY: Food and Drug Administration.

ACTION: Notice.

SUMMARY: The Food and Drug Administration (FDA) is issuing for comment draft guideline patient package inserts for ampicillins, benzodiazepines, cimetidine, clofibrate, digoxin, methoxsalen, propoxyphene, phenytoin, thiazides, and warfarin. In a separate notice to be published when the guidelines are final, the agency will amend § 203.31 (21 CFR 203.31) to apply the patient package inserts regulations to these drugs. Use of the final guideline patient package inserts by manufacturers, distributors, and dispensers of these drugs and drug classes will constitute compliance with those provisions of the agency's patient package inserts regulations, § 203.20(b), applicable to drugs made by any manufacturer.

DATE: Comments for October 27, 1980.

ADDRESS: Written comments to the Hearing Clerk (HFA-305), Food and Drug Administration, Rm. 4-62, 5600 Fishers Lane, Rockville, MD 20857.

FOR FURTHER INFORMATION CONTACT: Stephen C. Goft, Bureau of Drugs (HFD-107) Food and Drug Administration, 5600 Fishers Lane, Rockville, MD 20857, 301-443-4893.

SUPPLEMENTARY INFORMATION: The Food and Drug Administration (FDA) is asking for comments on draft guideline patient package inserts for the following 10 drugs or drug classes: Ampicillins, benzo-diazepines, cimetidine, clofibrate, digoxin, methoxsalen, propoxyphene, phenytoin, thiazides, and warfarin. These drugs and drug classes were selected for initial application of the patient package inserts regulations because they meet the agency's criteria justifying priority application of the regulations and because they are appropriate subjects to study further the effects of patient package inserts.

Elsewhere in this issue of the Federal Register, the agency is issuing final regulations that require manufacturers to prepare, and dispensers to provide to patients, patient package inserts for prescription drug products. Under the final regulations, the patient package inserts requirements apply to a drug product 180 days after the agency publishes a notice in the Federal Register announcing the applicability of the requirements to a drug or drug class.

The regulations also provide that FDA may publish guidelines for patient package inserts for drugs or drug classes. Once the guidelines are final, use of them constitutes compliance with the regulations governing the content, of the inserts, except that, as is apparent, the regulations require certain items of information to be filled in by each person responsible for preparing the inserts. Use of the guidelines is not required, however. Before publishing final guideline patient package inserts for the initial 10 drugs or drug classes to which the agency intends to apply the requirements, the agency is issuing draft guideline patient package inserts for these drugs and drug classes and asking for public comment. To facilitate comments on the draft guidelines, the agency is publishing them in a format that will permit commenters to make written comments directly on their Federal Register copy of the guidelines.

After reviewing the comments, the agency will publish final guideline patient package inserts. By separate notice of applicability of the general patient package inserts regulations, patient package inserts for these drugs or drug classes will be required 180 days after the date of publication of the final guidelines. The agency intends to publish guideline patient package inserts in November 1980, for cimetidine, clofibrate, and propoxyphene, in December 1980, for ampicillins, phenytoin, and warfarin, and in January 1981, for benzodiazepines, digoxin, methoxsalen, and thiazides.

Generally, each draft guideline text published with this notice contains information complying with all of the requirements for the content of patient package inserts labeling under § 203.20(b), except for the requirements for (1) the name and place of business of a person responsible for the content of the insert, (2) information about routes of administration for drug products that are not for oral use, (3) statements of special handling or storage conditions (except for liquid ampicillin), and (4) the date of the most recent revision of the insert. This information is largely dependent on a particular person or product, and persons responsible for patient package inserts are required to include that information in their individual leaflets.

The 10 draft guideline patient package insert texts do not contain statements about the use of the drug during labor or delivery, or statement about specific pediatric indications. None of the drugs have a recognized use during labor or delivery nor do they have specific pediatric indications.

A brief description of the drugs and drug classes to which the insert texts apply, and a discussion of the applicability of individual content requirements to each drug or drug class follows. (Certain content requirements apply to only a few of the 10 drugs; these are discussed only when they apply. Others are discussed only with respect to those drugs to which they do not apply.)

Ampicillins. Ampicillins, including ampicillin, amoxicillin, and hetacillin, are broad-spectrum antibiotics that are used widely to treat infections. Although ampicillins are generally prescribed for short-term treatment, a patient's adherence to the treatment program is very important. Nevertheless, patient compliance with short-term treatment programs for antibiotics is often low (see the Federal Register of July 6, 1979; 44 FR 40021). Noncompliance by patients with the treatment program may lead to more patient-prescriber contacts, additional prescriptions, and increased hospitalization because of the failure of ampicillins to have their intended effects. The drugs may also produce side effects which the patient should recognize and report to the prescriber.

Of the 10 guideline patient package insert texts published in this notice, only the guideline for ampicillin contains a statement that the drug is ineffective to treat an indication for which the agency believes there is a common belief among patients that the drug may be effective, that is, a statement that ampicillin is ineffective to treat the common cold. Information in the ampicillin guideline about serious allergic reactions that may occur from the use of the drug is emphasized through the use of type face. Finally, the ampicillin guideline does not contain a statement that identified activities, drugs, foods, or other substances that the patient should avoid while taking the drug because interactions with activities or substances are unlikely.

Benzodiazepines. Benzodiazepines, including clorazepate, chlordiazepoxide, diazepam, lorazepam, oxazepam, and prazepam, are used widely to treat anxiety. They have a high incidence of side effects, and they may produce physical and psychological dependence. The adverse effects, although generally only bothersome, may lead to serious injury or death if these drugs are combined with certain other drugs or alcohol.

The guideline for benzodiazepines includes both a statement that special precautions apply to the use of the drug

in elderly patients and a statement about the risk of the patient developing a dependence on the drug.

Cimetidine. Cimetidine is used widely to treat active duodenal ulcers and other pathological hypersecretory conditions, and used prophylactically to prevent the recurrence of ulcers in patients likely to need surgery. Because ulcer patients generally take an active role in their therapy, they must know exactly when they are to take cimetidine and supplement it with antacids for pain. The guideline informs patients about side effects that may disappear within a few days. In addition, cimetidine is associated with more serious side effects than are the drugs used as alternative therapy for acute peptic ulcers.

The guideline for cimetidine does not include a statement about contraindications; no absolute contraindictions are now known. The guideline also does not contain a statement about serious reactions and hazards from the drug. Reactions and hazards of the type required under that paragraph have not been show to exist. Nor does the guideline contain a statement about what the patient should do in the case of missed dose; here the agency believes the symptoms from an ulcer will lead the patient to comply and, thus, the information is unnecessary. The guideline for cimetidine includes, however, a statement about the use of the drug in elderly patients.

Clofibrate. Clofibrate is used widely to treat elevated cholesterol and triglyceride levels in the blood. Recent data suggest that only a very select patient population should use clofibrate, that is, only those people whose cholesterol and triglycerides have not responded to diet, weight loss, exercise, and other measures. In addition, several serious risks have been identified in patients taking clofibrate, including a doubling of risk of gallbladder inflammation and gallstones requiring surgery and an increased risk of tumors.

The guideline patient package insert for clofibrate includes a statement about the carcinogenic potential of the drug. The guideline does not contain a statement about what the patient should do in the case of a missed dose, but stresses instead the importance of the patient following the latest dosage directions provided by the practitioner.

Digoxin. Digoxin is used widely to treat congestive heart failure and artrial fibrillation. Because heart patients often receive multiple drug therapy, they must be aware of the possibility of drug interactions. For example, use of both digoxin and a potassium-depleting diuretic may lead to increased risk of digoxin toxcity. These side effects can be recognized early by the patient and reported to the physician before they result in hospitalization. In addition, digoxin requires patients to adhere to the prescribed regimen. Improper administration can lead to digoxin toxicity if too much is taken or a return of the original symptoms if doses are missed.

The guideline patient package insert for digoxin contains a specific warning about the use of the drug to treat obesity, a use not included in the professional labeling for the product and a use which presents significant risks to patients. The guideline also contains a prominently displayed box containing information about warning signals for the patient.

Methoxsalen. Methoxsalen is used to treat a condition in which skin pigmentation is lost in patches on different parts of the body. The drug is also used in the investigational treatment of psoriasis and is administered as part of a treatment called PUVA (*P*soralen and *U*ltra *V*iolet *A* light). It is important for the patient to avoid exposure to sunlight after taking methoxsalen. Thus, patients must prevent skin exposure to the sun, wear special sunglasses, and take other precautions. PUVA therapy is associated with an increased risk of skin cancer.

The guideline patient package insert for methoxsalen does not include information about what the patient should do in case of a missed dose because therapy is closely monitored by the health care professional. The guideline includes information about the carcinogenic potential of the drug in animals.

Phenytoin. Phenytoin is used widely to treat epilepsy or seizure disorders. A patient's failure to comply with therapy will result in increased numbers of seizures. Because the occurrence of side effects may deter patients from following their treatment program, information about increased seizure activity from not taking the drug and the occurrence of side effects that may disappear after the patient has adjusted to the medication is expected to improve patient compliance.

The guideline patient package insert for phenytoin contains information about warning signals associated with use of the drug that are placed in a prominently displayed box. The guideline includes information about the use of the drug by elderly patients.

Propoxyphene. Propoxyphene is used widely for the relief of pain. It has a significant abuse potential and may produce both physical and psychological dependence. It has depressant effects on the central nervous system, such as drowsiness or dizziness, and has additive effects when taken with alcohol or other central nervous systems depressants, such as sedatives, tranquilizers, or muscle relaxants, or with antidepressants. Alternative analgesics with similar potency and less abuse potential are available. With the potential for abuse and the reported overdose incidents, it is important for the patient to be informed about the consequences of inappropriate use.

The guideline patient package insert for propoxyphene emphasizes the potential hazards from the use of the drug with alcohol and includes information about the risks of a patient developing dependence on the drug.

Thiazides. Thiazides, including bendroflumethiazide, benzthiazide, chlorothiazide, chlorthalidone, cyclothiazide, hydrochlorothiazide, hydroflumethiazide, methylclothiazide, metolazone, polythiazide, quinethazane, and trichlormethiazide, are used widely to treat high blood pressure (hypertension) and congestive heart failure, liver disease, and kidney disease where fluid accumulation is a problem. The primary action of thiazides is the elimination of excess fluid, as well as sodium, potassium, and chloride, from the body. The loss of these substances may result in serious adverse effects that the patient should report to the treating physician or pharmacist. Because people with high blood pressure generally do not have symptoms of the disease, patient lack of compliance is a major problem associated with therapy. Patient package inserts should inform patients about the need for compliance, the potential side effects, and the consequences of failure to comply with the prescribed regimen. The patient package inserts requirements will apply only to single-entity thiazide drug products listed above.

Warfarin. Warfarin is an oral anticoagulant that is used widely to prevent blood clots from enlarging and more clots from forming and, thus, to prevent heart attacks, strokes, and pulmonary embolisms. Its effectiveness depends upon the patient closely following the prescribed therapy. Because of the serious adverse effect of major and minor bleeding episodes, patients should be knowledgeable about the symptoms from taking too much warfarin. Patient recognition of these symptoms would permit early medical treatment and avoidance of a major bleeding episode.

The guideline patient package insert for warfarin contains information about

warning signals for the patient from the use of the drug that are placed in a prominently displayed box.

In the proposed patient package inserts regulations published in the Federal Register of July 6, 1979 (44 FR 40016), the agency stated its intention to ask for contract proposals from interested private organizations and groups for drafting guideline patient package insert texts that would subsequently be reviewed by FDA staff and consultants. Because the agency has significantly reduced the implementation schedule of the final regulations, the agency believes that it would be impractical now to ask for contract proposals for drafting guideline texts for only 10 drugs or drug classes. In addition, the agency believes that its employees, due to their educational backgrounds and professional experience, have the necessary expertise to prepare draft guideline patient package inserts labeling for use in this phase of the program. FDA will, of course, carefully consider all written comments received on the draft guidelines and make all necessary revisions before issuing them in final.

BILLING CODE 4110-03-M

Ampicillin
(pronounced: am-pi-SILL-in)

Summary

Ampicillin is the name of a group of drugs used to treat bacterial infections. Finish all the prescribed medicine even if you begin to feel better. If you do not take all of the medicine the infection could return.

DO NOT TAKE AMPICILLIN IF YOU HAVE HAD AN ALLERGIC REACTION TO ANY FORM OF PENICILLIN OR TO AMPICILLIN. Ampicillin has produced serious, allergic reactions. In rare cases fatalities have occurred. If you have a rash, hives, itching or difficult breathing after taking ampicillin, call your doctor or hospital immediately. You may need emergency medical treatment.

The rest of this leaflet gives you more information about ampicillin. Please read it and keep it for future use.

Uses of Ampicillin

Ampicillin is a pencillin antibiotic. It is used to treat various types of infection, for example, those in the throat, ears, urinary tract and lungs (bronchitis and pneumonia). Ampicillin kills bacteria but not viruses. It should not be used to treat the common cold.

Before Taking Ampicillin

Allergic Reactions: If you have had an allergic reaction to any form of penicillin, or to ampicillin you should not take ampicillin. Serious and sometimes fatal allergic reactions have occurred but they are rare. They occur more often after an injection than with medicine taken by mouth. If you have a history of an allergic reaction to a penicillin or ampicillin or any kind of allergy including asthma and hay fever be sure to tell your doctor and pharmacist.

If you get hives, itching, rash, or if you start wheezing or have difficulty breathing after taking ampicillin, call your doctor or a hospital immediately. You may need emergency treatment.

How To Take Ampicillin

Most infections take several days or weeks to cure. When you start taking ampicillin, it will kill the bacteria

causing the infection. You may start to feel better within a few days. However, if you do not continue to take the medicine, some of the bacteria may remain alive and multiply. This can cause a return of the symptoms or disease. If you have taken all the medicine and still do not feel better, call your doctor.

It is best to take ampicillin on an empty stomach; one hour before or two hours after meals.

If you miss a dose, but remember later take it as soon as possible. Take the remaining day's doses at the regularly scheduled times. Do not take two doses at the same time.

Cautions—Pregnancy and Breast Feeding

The safe use of ampicillin during pregnancy has not been established. The effects of ampicillins on unborn children are unknown. However, pregnant women with infections are given ampicillin in order that the infection will not harm the child.

Ampicillin may pass, in breast milk from mother to infant. It is unknown whether the child will have any side effects due to the ampicillin.

Possible Side Effects

Ampicillin may cause diarrhea (especially in children). It may also cause irritation of the mouth and tongue, nausea, and vomiting. Some of these effects will often go away after several days as the body gets used to the medicine. If they do not go away or become bothersome, call your doctor.

Other reactions may take longer to develop. A rash with itching over the entire body including the feet, hands, and mouth may occur. This reaction is expected more often for people who have had allergic reactions to penicillin or a history of allergy, asthma, or hay fever.

Other Information

Ampicillin liquid should be kept in the refrigerator. Be sure to shake the bottle before using. Do not use ampicillin liquid after the expiration date. Do not save it to use for a later infection, because it is not effective after this date.

The safe and effective use of this drug depends on your taking it as directed. Ampicillin has been prescribed specifically for you and your present infection.

Do not give this drug to others who may have similar symptoms.

In the event of an accidental overdose, contact your doctor, poison control center, or nearest hospital emergency room immediately. Keep this and all drugs out of the reach of children.

If you would like more information about ampicillin, ask your doctor or pharmacist. They have a more technical leaflet (called a package insert) they can let you read. You may need their help to understand it.

Benzodiazepines

(pronounced: ben-zoe-dye-AZ-e-peens)

Summary

Benzodiazepines are a group of tranquilizer drugs. They are commonly used to relieve anxiety, muscle spasms, and other conditions determined by your doctor. Like other tranquilizers, they should not be used to treat anxiety or tension due to the stress of everyday life. Benzodiazepines have not been shown to be effective in the treatment of anxiety for periods longer than 4 months.

Benzodiazepines may make you drowsy and less coordinated. Be careful when driving a car or using machines until you know how the drug affects you. Taking a benzodiazepine with certain other drugs or alcohol can have serious results. Avoid drinking alcohol or taking drugs which depress the nervous system while taking benzodiazepines. You should not use benzodiazepines if you are pregnant unless your doctor specifically advises you to.

Benzodiazepines may cause dependence. This usually occurs with higher than recommended dosages taken continually for a long time. If you have been taking the drug continuously for a long time, consult your doctor before you stop taking it. Withdrawal symptoms such as anxiety, tremors, and sleeplessness can occur.

The rest of this leaflet gives you more information about benzodiazepines. Please read it and keep it for future use.

Uses of Benzodiazepines

Benzodiazepines are most commonly used to treat anxiety alone (often experienced as difficulty sleeping,

nervousness, and apprehension) or anxiety that occurs with other medical problems (such as heart and stomach conditions). Some benzodiazepines are used to treat muscle spasm, muscle stiffness and soreness that occurs with sprains and strains.

They are also used to treat muscle spasms that occur with cerebral palsy and spinal cord damage, and for certain convulsive disorders. If you want to know more about these or other special uses, ask your doctor or pharmacist.

Before Taking Benzodiazepines

Anxiety or tension that results from the *stress of everyday life* does not usually require treatment with a tranquilizer.

Benzodiazepines should not be used *during pregnancy* unless your doctor specifically tells you to take them. Studies suggest an increased rate of birth defects in children whose mothers took benzodiazepines during the first three months of pregnancy. Be sure to tell your doctor if you are pregnant or planning to become pregnant.

While *breast feeding*, benzodiazepines may pass through the milk to the child. This may cause the baby to become drowsy. Avoid using benzodiazepines while breast feeding.

Do not take a benzodiazepine if you have had an *allergic reaction* to them or if you have *glaucoma* (acute narrow angle type). Be sure to tell your doctor if you have these or liver or kidney problems, and epilepsy or seizure disorders.

If any of these apply, tell your doctor immediately.

How To Take Benzodiazepines

If you miss a dose of this medicine, do not take twice as much the next time. Also, do not change the dosage unless told to do so by your doctor.

If you have been taking benzodiazepines for a month or more your doctor should reassess your condition and your continued use of the drug. The effect of these drugs for the relief of anxiety for periods longer than 4 months has not been studied. If you feel that your medicine is not helping you, discuss it with your doctor.

Cautions—Pregnancy and Breast Feeding

Benzodiazepines should not be used *during preg-*

nancy unless your doctor specifically tells you to take them. Studies suggest an increased rate of birth defects in children whose mothers took benzodiazepines during the first three months of pregnancy. Be sure to tell your doctor if you are pregnant or planning to become pregnant.

While ***breast feeding***, benzodiazepines may pass through the milk to the child. This may cause the baby to become drowsy. Avoid using benzodiazepines while breast feeding.

General Cautions

A benzodiazepine can make you ***drowsy and less coordinated***, especially when you first begin to take the drug. Elderly people may notice these effects more than others. Be careful when driving a car or using machines until you know how the drug affects you.

You should avoid ***drinking alcohol*** while taking a benzodiazepine. The combination of alcohol and tranquilizers dangerously increases the effects of both. This can make you suddenly feel very drowsy or uncoordinated.

Do not take benzodiazepines with certain other drugs unless your doctor knows and approves of their use. These drugs include the following: sleeping pills, cough and cold medicines, antihistamines, antidepressants, pain killers, and other tranquilizers. ***Taking benzodiazepines with other drugs can cause serious, possibly fatal, reactions.***

Dependence

You can become dependent on benzodiazepines. Dependence is a craving for the drug or the inability to function normally without it. Dependence usually occurs when higher than recommended doses are taken over long pzriods of time.

If you have been taking a benzodiazepine for a long time, ***do not suddenly stop taking it.*** Withdrawal symptoms may occur. Some of these symptoms include: anxiety, tremors, sleeplessness, mental confusion, stomach cramps, sweating, or irritability. Some of these symptoms may be similar to your original reasons for taking the drug. To help avoid these symptoms, your doctor can put you on a schedule to gradually reduce the dose.

Overdose

An overdose of benzodiazepines alone or in combination with other drugs or alcohol can be fatal. Signs of an overdose are extreme drowsiness, weakness, staggering, shakiness and confusion. If an overdose is suspected, *get emergency help immediately* from your doctor, poison countrol center or nearest hospital emergency room. Keep this and all drugs out of the reach of children.

Possible Side Effects

When you first start taking a benzodiazepine, you may feel tired, drowsy, or unsteady. These effects may not last for more than a few days as your body adjusts to the medicine. Less frequent side effects include confusion, excitement, depression, rash, blurred vision, and difficulty urinating. If they continue tell your doctor. A lower dose may be needed.

Other Information

The safe and effective use of a benzodiazepine depends on your taking it exactly as directed. This drug has been prescribed specifically for you. Do not give this drug to others who may have similar symptoms or use it for any other reasons.

If you would like more information about benzodiazepines, ask your doctor or pharmacist. They have a more technical leaflet (called the package insert) they can let you read. You may need their help to understand it.

Cimetidine
(pronounced: sye-MET-i-deen)

Summary

Cimetidine is commonly used to treat intestinal (duodenal) ulcers and in certain cases to prevent them from reoccuring. It may take several weeks before you notice its effects. Do not stop taking the drug unless your doctor tells you to stop. You may need to take antacids between doses of cimetidine to relieve ulcer pain.

The rest of this leaflet gives you more information about cimetidine and ulcers. Please read it and keep it for future use.

Uses of Cimetidine

Cimetidine helps heal intestinal ulcers by decreasing the amount of acid made by the stomach. Ulcers and the pain they cause are often relieved by decreasing the amount of acid produced. Most ulcers treated with cimetidine heal within 6 to 8 weeks.

Cimetidine is also used for certain patients to prevent the reoccurence of ulcers. When taken for this, the drug is used at a lower dose and is usually taken only at bedtime. Cimetidine is also used for other conditions as determined by your doctor.

How To Take Cimetidine

Cimetidine is usually taken with meals and at bedtime. If your ulcer causes pain, as most do, your doctor may tell you to take antacids between meals and at bedtime. Antacids help the ulcer to heal and control its symptoms.

Although the healing effects of cimetidine begin in the first week or two of treatment, it will be necessary to take the drug for several weeks. Do not stop taking the cimetidine without first checking with your doctor If ulcer pain lasts or worsens while taking the drug, call your doctor.

Cautions - Other Drugs

Do not use any other drugs, including nonprescription drugs, unless your doctor knows and approves their use. Drugs to be especially careful about are:

- Aspirin or arthritis drugs - may irritate your ulcer and cause more pain.
- anticoagulants ("blood thinners") - when taken together with cimetidine may cause bleeding. Your doctor may need to reduce the dose of the anticoagulant to prevent bleeding.
- drugs to treat anxiety (tranquilizers such as Valium, Librium, Serax) - cimetidine can increase the action of these drugs to make you very sleepy or drowsy.

General Cautions

Avoid any food or drink that may irritate your ulcer. Alcohol, coffee, tea, cola drinks and highly acidic foods (such as tomatoes) may cause some pain. Cigarette smoking may also irritate your ulcer.

Cimetidine should not be used during pregnancy unless your doctor knows you are pregnant and approves its use. Cimetidine passes to the unborn child and the effects, if any, on the unborn child are not known.

Cimetidine also passes to the child in breast milk. It may be safer not to breast feed your child if you are taking the drug. The effect of cimetidine in children (those under 16) is unknown.

Before you take cimetidine, make sure your doctor knows if you have ever had kidney problems.

Possible Side Effects

Side effects have been reported by about 4 patients out of every 100 who took cimetidine. The most frequently reported are: diarrhea, nausea, and vomiting; rash, hives, and itching; fever, dizziness, headache, and sleepiness; stomach pains, cramps, constipation, and gas; dry mouth and muscle pains.

Men have reported slight breast enlargement and sore breasts. Mental confusion can occur, especially for elderly and severely ill patients. This effect disappears after the drug is stopped. If you have any of these side effects tell your doctor at the next visit. If they become bothersome, call your doctor.

Serious but rare blood disorders have been reported. Symptoms of these disorders include fatigue, weakness, pale appearance, increased occurrence of infection, fever, sore throat, easy bruising or bleeding. Rare cases of kidney and liver disease have been reported. Symptoms of these include fatigue, loss of appetite, fever, abdominal pain or yellowing of the skin. If any of these symptoms appear while you are taking cimetidine, call your doctor immediately.

Other Information

The safe and effective use of this drug depends on your taking it as directed. Cimetidine has been prescribed specifically for you. Do not give this drug to others who may have similar symptoms or use it for any other reasons.

In the event of an accidental overdose, contact your doctor, poison control center or nearest hospital emergency room immediately. Keep this and all drugs out of the reach of children.

If you would like more information about cimetidine, ask your doctor or pharmacist. They have a more tech-

nical leaflet (called a package insert) they can let you read. You may need their help to understand it.

Propoxyphene
(pronounced: proe-POX-i-feen)

Summary

Propoxyphene is used to relieve pain but can be dangerous when mixed with other drugs or alcohol. Limit your intake of alcohol while taking this drug. Also do not take any tranquilizers, sleep aids, antidepressants, antihistamines, or any other drugs that make you sleepy unless your doctor tells you to do so. Combining any of these with propoxyphene may lead to an overdose.

Propoxyphene may make you sleepy. Use care driving a car or using machines until you see how the drug affects you. Do not take more of the drug than your doctor prescribed. Dependence has occurred when patients have taken propoxyphene for a long period of time at a dose greater than recommended.

The rest of this leaflet gives you more information about propoxyphene. Please read it and keep it for future use.

Cautions

Other Drugs: Combinations of excessive doses of propoxyphene, alcohol, and tranquilizers may be dangerous. Make sure your doctor knows you are taking tranquilizers, sleep aids, antidepressant drugs, antihistamines, or any other drugs that make your sleepy. The use of these drugs with propoxyphene increases their sedative effects and may lead to overdoses symptoms, including death (see "Overdose" below).

Alcohol: Heavy use of alcohol with propoxyphene is hazardous and may lead to overdosage symptoms (see "Overdose" below). THEREFORE, LIMIT YOUR INTAKE OF ALCOHOL WHILE TAKING PROPOXYPHENE.

Regular Activities: Propoxyphene may cause drowsiness or impair your mental and/or physical abilities; therefore, use caution when driving a vehicle or operating dangerous machinery. DO NOT perform any hazardous task until you have seen your response to this drug.

Who Should Not Take Propoxyphene

Do not take propoxyphene during pregnancy unless your doctor knows you are pregnant and specifically recommends its use.

The effects of propoxyphene in *children under 12* has not been studied. Therefore use of the drug in this group is not recommended.

Make sure your doctor knows if you have ever had an allergic reaction to propoxyphene, aspirin, or acetominophen.

Some forms of propoxyphene contain aspirin to help relieve the pain. Do not take propoxyphene in this form if you have ulcers or if you are taking an anticoagulant ("blood thinner"). The aspirin may irritate the ulcer and cause it to bleed. In a small group of people, aspirin may cause an asthma attack. If you are one of these people, be sure your drug does not contain aspirin.

How To Take Propoxyphene

Follow your doctor's directions exactly. Do not increase the amount you take without your doctor's approval. If you miss a dose of the drug, do *not* take twice as much the next time.

Dependence

You may become dependent on propoxyphene. Physical and psychological dependence occurs when you have a craving for the drug and cannot perform normally without it. Dependence has occurred to people who have taken larger than recommended doses of propoxyphene over a long period of time.

Overdose

An overdose of propoxyphene alone or in combination with other drugs including alcohol is likely to exaggerate the drug's normal effects. It may cause extreme drowsiness, weakness, breathing difficulties, and confusion. A large overdose may lead to unconsciousness and death.

When the propoxyphene product contains acetominophen, overdose symptoms are nausea, vomiting, lack of appetite and abdominal pain. An overdose may lead to liver damage, coma and death.

When the propoxyphene product contains aspirin,

symptoms of taking too much of the drug are headache, dizziness, ringing in the ears, difficulty hearing, dim vision, confusion, drowsiness, sweating, thirst, rapid breathing, nausea, vomiting and occasionally, diarrhea.

In any suspected overdose situation, GET EMERGENCY HELP IMMEDIATELY. Keep this drug and all drugs out of the reach of children.

Possible Side Effects

When propoxyphene is taken as directed, side effects are infrequent. Among those reported are drowsiness, dizziness, nausea, and vomiting. If these effects occur, it may help to lie down and rest.

Less frequently reported side effects are constipation, abdominal pain, skin rashes, lightheadedness, headache, weakness, minor visual disturbances, and feelings of elation or discomfort.

If any of these side effects occur and becomes bothersome, contact your doctor.

Other Information

The safe and effective use of propoxyphene depends on your taking it exactly as directed. This drug has been prescribed specifically for you and your present condition. Do not give this drug to others who may have similar symptoms or use it for any other reason.

If you would like more information about propoxyphene, ask your doctor or pharmacist. They can give you a more technical leaflet (called a package insert) they can let you read. You may need their help to understand it.

Methoxsalen

(pronounced: meth-OX-a-len)

(Psoralen, SOR-ah-len is another name for methoxsalen)

Summary

Methoxsalen capsules are commonly used to treat vitiligo (vit-i-LIE-go). This is a condition where patches of skin color are lost. Methoxsalen is also being studied for the treatment of severe psoriasis that has not been helped by other drugs. For methoxsalen to work, you must take

it and then be exposed to special ultraviolet light 2 or 3 hours later. This combined treatment is called PUVA, which stands for *P*soralen and *U*ltra *V*iolet *A*. (Psoralen is another name for methoxsalen.)

While taking methoxsalen, avoid direct sunlight, both before and after taking the drug. You must protect your eyes with special sunglasses. Report any unusual skin changes to your doctor immediately.

The rest of this leaflet gives you more information about methoxsalen. Please read it and keep it for future use.

Vitiligo - The Loss of Skin Color

Skin color is determined by the amount of pigment (or melanin) in the skin. This pigment is formed by a chemical reaction and ultraviolet light helps quicken this reaction. That is why skin turns darker when sunbathing.

In vitiligo, pigment is lost in patches on different parts of the body. The combination of methoxsalen and ultraviolet light helps restore pigment to the white patches of the skin. Methoxsalen is also being studied for the treatment of severe psoriasis not helped by other durgs.

For methoxsalen to work, you must take it 2 to 3 hours before you are exposed to ultraviolet light. The drug will not work unless you are exposed to the light.

Cautions

Your skin, lips, and eyes will be more sensitive to sunlight while you are taking methoxsalen. Too much exposure to sunlight during this period can cause serious burning of you skin and damage to your eyes. If you must go into the sunlight be sure to use a sunscreen lotion recommended by your doctor for the exposed body parts. Special lipstick to block sunlight should also be used.

It is extremely important that you take the following precautions while using methoxsalen:

- Do not sunbathe 24 hours before or 8 hours after taking methoxsalen.
- Wear ***special sunglasses*** immediately after you take the medicine and for the rest of the day. Ordinary sunglasses usually do not give enough protection. Your doctor can tell you more about them.

Before Taking PUVA Treatments

Other medicines could make your skin more sensitive to the PUVA treatments. Also, certain conditions could be worsened by them. ***Before you have any PUVA treatments, tell your doctor if you:***

- have had any recent x-rays or are planning any.
- are taking any prescription or nonprescription drugs, (including any prescribed after you have started PUVA treatment).
- have or ever had melanoma or any skin cancer.
- have any eye problems (such as cataracts or loss of a lens).
- have any heart or liver problems.
- have any condition that requires you to stay out of the sun.
- are pregnant or plan to become pregnant.

Possible Side Effects

Frequent exposure to the sun over several years causes the skin to age more rapidly and increases the likelihood of getting skin cancer. Since PUVA treatment uses ultraviolet rays that is also present in sunlight, you may have a somewhat greater risk of skin cancer. Patients treated with PUVA for psoriasis have a somewhat higher risk of skin cancer than those not treated. You should routinely examine yourself for the early signs of skin cancer. For example look for a darkening or enlargement of a mole or a small growth on the skin. Report this or any other unexplained skin changes to your doctor immediately.

Have your eyes examined each year after starting PUVA treatments. Some animals given methoxsalen and exposed to ultraviolet light have developed eye problems such as cataracts. It is unknown whether humans will also develop cataracts after receiving PUVA treatment.

The most common side effect of methoxsalen is nausea. You may be able to prevent this by taking the drug with milk or food. If this does not help, tell your doctor.

Another common side effect is redness and itching of the skin. This can usually be helped by bland ointments or lotions recommended by your doctor or pharmacist. If redness or itching lasts longer than a few days, they should be treated by your doctor.

Other Information

Methoxsalen, when combined with ultraviolet radiation or sunlight, is a potent drug. Under no circumstances should you increase the number of capsules you are taking. Do not let anybody else use methoxsalen and do not use it yourself for any other reason.

In the event of an accidental overdosage, contact your doctor, poison control center, or nearest hospital emergency room immediately. Keep this and all drugs out of the reach of children.

If you would like more information about methoxsalen, ask your doctor or pharmacist. They have a more technical leaflet (called a package insert) they can let you read. You may need their help to understand it.

Phenytoin

(pronounced: FEN-i-toyn)

Summary

Phenytoin is commonly used to help control certain types of epilepsy or seizure disorders. Taking the prescribed dose of phenytoin is very important. Too little will not control seizures and too much can lead to toxicity. If you notice any signs of toxicity, call your doctor immediately. These include eye problems (jerky eye movement, blurred or double vision), staggering, or difficulty walking, slurred speech, drowsiness, dizziness, or hallucinations. Do not stop taking phenytoin or change brands unless your doctor tells you. Abruptly stopping the drug can cause seizures to occur.

The rest of this leaflet gives more information about phenytoin. Please read it and keep it for future use.

Why Take Phenytoin?

Phenytoin does not cure seizure disorders. It prevents or reduces the number of epileptic attacks. Sometimes other drugs are also needed to control the attacks. Even if you feel fine continue to take phenytoin or the symptoms will return. Phenytoin is also used for other conditions as determined by your doctor.

Before Taking Phenytoin

Tell your doctor if you have ever had *liver problems*. If your liver is not working properly, the drug can build

up in the body. This can cause toxic signs with ordinary doses.

Diabetics should know that phenytoin may increase your blood sugar levels. Make sure your doctor knows if you have diabetes or if you ever had an allergic reaction to phenytoin.

Cautions—Pregnancy

The effect of phenytoin during *pregnancy* is not clearly known. Reports show that women taking drugs for epilepsy more often give birth to children with birth defects than expected. It is not known whether the disease or the drug cause the birth defects. The great majority of women taking drugs to control seizures, however, deliver normal babies.

How To Take Phenytoin

Your doctor may change the dose during the first few weeks to find the right amount for you. Once you have a regular schedule it is best to take phenytoin at the same time each day. This will help you remember to take each dose.

If you are using phenytoin liquid, shake the bottle well before measuring the dose. The medicine often settles to the bottom. Use a standard measuring spoon (usually available at the pharmacy). If you are taking the chewable tablets, chew them up completely before swallowing.

If You Miss A Dose

If you forget to take the drug at the usual time, take it as soon as you remember. Take the rest of the day's dose at the regular time. If you remember the next day that you missed yesterday's dose, do not take two doses; take only the amount scheduled for that day. If you miss two or more days doses, call you doctor.

General Cautions

Changing Products: The amount of drug absorbed by your body may change if you switch to a different brand of phenytoin. Do not change drug products without telling your doctor.

Drugs: Some drugs interact with phenytoin. These include barbiturates, anticoagulants ("blood thinners" like warfarin), drugs for tuberculosis (isoniazid), and certain drugs for depression (tricyclic antidepressants). Your doctor may have to adjust your dosage of pheny-

toin when you are taking these drugs. While on phenytoin ***do not start or stop taking any drugs without your doctor's knowledge.***

Alcohol: Combining alcohol with phenytoin may cause exteme drowsiness and reduce the effect of phenytoin. It is best to limit your intake of alcohol while on phenytoin.

Mouth Hygiene: Phenytoin often causes red, swollen gums ("gum hyperplasia"), especially in children. Brush your teeth, massage your gums, and use dental floss regularly. Visit your dentist twice a year for checkups.

Harmful Reactions: Certain serious side effects can occur with phenytoin. These are not frequent but can be ***very serious***. If any of these occur, call your doctor immediately:

- rash, especially with blistering, peeling, or bruising;
- liver disorder noticed by yellowing of the skin or eyeballs, fever, fatigue, loss of appetite and abdominal pain;
- dark colored urine or light colored bowel movements;
- blood disorders noticed by weakness, fever, sore throat, abnormal bleeding or bruising.

Lab Tests: You may need to have lab tests to check if the drug is working properly or causing problems. Phenytoin may affect thyroid and another tests.

Warning Signals

It is important to watch out for the signs of phenytoin toxicity and ***report them to your doctor immediately.*** Elderly patients and people with liver problems may show these signs at lower dose levels. Signs of toxicity include the following:

- jerky eye movements, blurred vision, double vision;
- staggering, difficulty walking, muscle incoordination;
- slurred speech;
- drowsiness, dizziness, hallucinations.

Possible Side Effects

Less serious side effects can occur. Phenytoin may cause nausea and vomiting. If this happens, try to take the drug with meals. The drug may color your urine pink, brown, or red. This is not abnormal or serious. Phenytoin may also cause increased hair growth, espe-

cially in young children. If they become bothersome, call your doctor or pharmacist. Do not stop taking the drug.

Other Information

The safe and beneficial use of phenytoin depends on your taking it exactly as directed. This drug has been prescribed specifically for you and your present condition. Do not give this drug to others who may have similar symptoms. In the event of an accidental overdose contact your doctor, poison control center or nearest hospital emergency room immediately. Keep this and all drugs out of the reach of children.

If you would like more information about phenytoin, ask your doctor or pharmacist. They have a more technical leaflet (called a package insert) they can let you read. You may need their help to understand it.

Digoxin
(pronounced: di-JOX-in)

Summary

Digoxin helps the heart beat more strongly and, sometimes more regularly. This helps the blood circulate better throughout the body. Keep taking digoxin exactly as directed even if you are feeling better. Check with your doctor before making any change in the dosage schedule.

While taking digoxin look for the warning signals of too much digoxin in your body. This is often referred to as digoxin toxicity. Call your doctor immediately if you have any of the following symptoms: a loss of appetite, nausea, vomiting, diarrhea; blurry vision, seeing spots, halos (rings), yellow vision, or weakness.

The rest of this leaflet gives you more information about digoxin. Please read it and keep it for future use.

Why Take Digoxin?

Digoxin is commonly used to treat heart failure and to slow the heart rate. Heart failure occurs when the heart cannot pump enough blood through the body. Symptoms of heart failure are fatigue, difficulty breathing, swelling (especially in the legs and ankles), and rapid or "galloping" heartbeats. You may have had some of these symptoms before taking digoxin. They may return if you stop taking digoxin.

Digoxin may be used for fast or irregular heart rates. It increases the strength of the heartbeat and may slow down the heart rate. This allows the heart to pump blood more regularly.

> Digoxin should never be used to help you lose weight. Using digoxin for this purpose is dangerous and may cause death.

How To Take Digoxin

There is a narrow range between the helpful and harmful amount of digoxin in your body. If you have too much you may have toxic signs. If you have too little, you may have signs of heart failure or too rapid heart beat. That's why it is so important to follow the dosage directions carefully.

Digoxin *does not cure* heart failure but helps control it. Therefore, you must take it even when you are feeling better. When you first start taking digoxin, the dose may be changed to find the right amount for you. Make sure your doctor knows if you have liver, kidney, or thyroid conditions or if you are taking any other drugs.

Try to take digoxin at the same time every day. This may help you to remember to take it. Do not skip any doses. If you miss a dose, take the tablet as soon as you remember it that day. If you do not remember until the next day, do not take two doses. Take only the dose scheduled for that day. If you forget to take two or more doses in a row, contact your doctor.

Warning Signals

Call your doctor immediately if you notice nausea, vomiting, diarrhea, loss of appetite, change in vision ("halo" effect, spots, blurred or yellow vision) or weakness. You should watch for such signals particularly after starting treatment or when your doctor increases the dose.

Pulse rate: Changes in your pulse rate are a good way of telling if you are taking the right amount of the drug. Every day before taking digoxin check your pulse while resting. If you do not know how to take your pulse, ask your doctor. Call your doctor immediately if you have an increase or decrease of 20 beats or more a minute from your normal pulse.

Cautions

Other drugs: Other drugs may change the amount of digoxin in the body. For example, antacids can prevent the digoxin from being absorbed by the body. Laxatives can cause the drug to be removed from the body faster than normal. If you start taking any new drug while on digoxin, be sure to tell your doctor and pharmacist.

Diuretics: Your doctor may tell you to take diuretics ("water pills") with digoxin. Diuretics may cause your body to lose potassium. Signs of excess potassium loss are leg cramps, muscle pains, fatigue or nausea. If these appear, tell your doctor. You may need to eat more foods containing potassium or take a potassium supplement. Foods rich in potassium are bananas, oranges, tomato juice, and dried fruits.

ECG/lab tests: You may need to have tests while taking digoxin. These include an electrocardiogram (ECG) and may include blood tests to make sure the drug is working properly and safely.

Other illnesses: Any illness that causes vomiting, diarrhea, or other fluid loss for more than a day or two should be reported to your doctor.

Possible Side Effects

After you start taking digoxin, you may need to urinate more often. Other side effects occur rarely. If a side effect occurs or becomes bothersome, call your doctor.

Other Information

The safe and effective use of digoxin depends on your taking it as directed. This drug has been prescribed specifically for you. Do not give this drug to others who may have similar symptoms or use it for any other reasons.

In the event of an accidental overdose, contact you doctor, poison control center or nearest hospital emergency room immediately. Keep this and all drugs out of the reach of children.

If you would like more information about digoxin, ask your doctor or pharmacist. They have a more technical leaflet (called a package insert) they can let you read. You may need their help to understand it.

Clofibrate
(pronounced: kloe-FYE-brate)

Summary

Clofibrate is used to lower the amount of fatty substances in the blood, namely, cholesterol and triglycerides. People with high levels of fats in their blood have a greater risk of heart disease. However, taking clofibrate may increase your risk of having gallbladder trouble or getting tumors.

Therefore, clofibrate is not for everyone with high cholesterol and triglycerides. It should be used only by people who have not responded to diet, weight loss, exercise, or other measures prescribed by their doctor.

While taking clofibrate, it is important to have regular blood tests. The rest of this leaflet gives you more information about clofibrate. Please read it and keep it for future use.

Why Reduce Cholesterol and Triglycerides?

When large amounts of fatty substances are in the blood, they can harden and build up along the walls of the arteries (blood vessels coming from the heart). This buildup is called plaque. Having too much plaque can decrease the flow of blood. This can cause heart disease, such as angina (chest pain), heart attack, or stroke. These are among the leading causes of death in the United States.

People with low levels of cholesterol and triglycerides in their blood have a lower risk of heart attack than people with high levels. It has not been clearly shown that lowering cholesterol and triglyceride levels is beneficial. In one large study, there was a 33 percent decrease of ***nonfatal heart attacks*** for patients whose cholesterol levels were reduced by the drug. However, there was no decrease in ***fatal heart attacks***. In another study of patients who had had at least one heart attack, neither clofibrate nor other drugs which lower cholesterol decreased the rate of fatal heart attacks.

You may ask, "what is the benefit of taking drugs to lower cholesterol?" If you begin treatment early and get good control of cholesterol and triglycerides with diet, exercise, and drugs, you may get some benefit from the treatment. It is not certain how much that benefit will be.

Who Should Not Take Clofibrate

Do not take this drug if you:

- are pregnant or breast feeding. The effects on the unborn or nursing child are not known.
- have serious liver or kidney disease.

Women capable of becoming pregnant should practice some form of birth control while taking clofibrate. Women who plan to become pregnant should stop taking clofibrate several months before trying to become pregnant.

Risks of Taking Clofibrate

In two very large studies, serious risks of taking clofibrate for several years have been shown or suggested. These studies show a doubling of the risk of getting gallstones and an inflammation of the gallbladder requiring it to be removed by surgery. Thus, for people taking clofibrate for 5 years, 1 of 100 patients would require gallbladder surgery.

One of the studies suggested a 30% increased risk of getting cancer. In this study, of people aged 40-59 who took clofibrate for 5 years, 22 out of 2,000 got cancer. For people with high cholesterol who did not take clofibrate, 17 out of 2,000 got cancer during the same time period. For those patients aged 40-59, an additional 1 person out of 400 would be expected to get cancer over a 5 year period while taking clofibrate. Mice and rats that have been given clofibrate at five to eight times the human dose showed an increased risk of getting liver tumors, some of which were cancerous.

Several other problems relating to the heart and circulation of blood have been noticed. These include heart arrhythmias (abnormal heart beat), blood clotting, angina (chest pain) and blood circulation problems (noticed by pain in the legs).

Because of these risks and the uncertain benefits of this drug, (and others used to treat high cholesterol and triglycerides), relatively few patients should take clofibrate. If your doctor prescribed this drug, you should have regular blood tests to find out how it is working. In addition, your doctor may want to do other tests to find out if clofibrate is causing any harmful effects. Your doctor may decide to stop prescribing clofibrate after a few months if fats in the blood do not decrease. To make sure your doctor can tell how well it is working, it is important to take clofibrate on the schedule prescribed.

Cautions

Before taking clofibrate, tell your doctor if you:

- are taking an anticoagulant drug (a blood thinner). Your doctor may have to decrease the dose of the blood thinner.
- have diabetes. If you can control your diabetes by diet or drugs, you may not need to take this drug.
- have a stomach or intestinal ulcer. Taking clofibrate may make your ulcer worse.
- have had jaundice or liver disease. Your doctor may switch to another drug.

Possible Side Effects

In addition to the risks already mentioned, there are some side effects that could occur while taking clofibrate. Most of these are not too serious. If any of these side effects are bothersome, contact your doctor.

You may get "flu-like" symptoms such as muscle aches, soreness, or cramping. Some other side effects include stomach problems (such as nausea, diarrhea, vomiting, and bloating); skin reactions (such as itching, rash); loss of hair and dry, brittle hair; headache; dizziness; increased appetite and weight gain; decreased sexual desire; painful or difficult urination; liver problems; anemia or a decrease of white blood cells.

Other Information

The safe and effective use of clofibrate depends on your taking it as directed. This drug has been prescribed specifically for you and your present condition. Do not give this drug to others who may have similar symptoms.

In the event of an accidental overdose, contact your doctor, poison control center or nearest hospital emergency room immediately. Keep this and all drugs out of the reach of children.

If you would like more information about clofibrate, ask your doctor or pharmacist. They have a more technical leaflet (called a package insert) they can let you read. You may need their help to understand it.

Warfarin
(pronounced: WAR-far-in)

Summary

Warfarin is commonly used to help stop blood clots from forming or getting larger. It is extremely important to take warfarin exactly on schedule. Do not change the amount or stop taking it without the approval of your doctor.

Warfarin can dangerously interact with other drugs, even *aspirin*. Check with your doctor or pharmacist before starting or stopping any other drugs, including those available without a prescription. If you receive any medical treatment be sure to tell your doctor or dentist that you are taking warfarin.

Report any unusual or excessive bruising or bleeding to your doctor at once. Signs of internal bleeding are: black and blue marks on the skin; black or bloody bowel movements, red or dark brown urine; and prolonged headaches, stomach pains, or backaches.

Before taking the drug tell your doctor if you are taking any other drugs, if you have any other medical conditions, or if you are or plan to become pregnant.

The rest of this leaflet gives you more information about warfarin. Please read it and keep it for future use.

Why Take Warfarin?

Warfarin is an anticoagulant, often called a blood thinner. It is commonly used to prevent or treat blood clots and other conditions as determined by your doctor. Clots in the veins can break off and travel to the lungs. Clots can also cause a heart attack or a stroke.

Anticoagulants are used to prevent clots from getting larger and to keep new ones from forming. They do not dissolve clots you already have.

Before Taking Warfarin

Your doctor and pharmacist should know all the *other drugs* that you take including nonprescription drugs.

Warfarin is almost never used during *pregnancy*. Make sure your doctor knows if you plan to get pregnant. During pregnancy, warfarin passes to the child

and may cause fatal bleeding. Some women who took warfarin while pregnant have had children with birth defects.

You should avoid ***breast feeding*** if you are taking warfarin. Warfarin passes in milk to the child. It could cause a bleeding problem in the child.

Be sure your doctor knows about any other ***medical conditions*** you have, especially those involving bleeding (ulcers or long or heavy menstrual periods), diabetes, kidney or liver disease, or high blood pressure.

How To Take Warfarin

It is extremely important to control the amount of warfarin you take. Your doctor may change the dosage schedule often to find the right amount for you. If you take too much, you may start bleeding. If you take too little, you may get more blood clots.

Do not change the amount or stop taking the drug without first talking to your doctor. You must continue taking warfarin for as long as your doctor tells you to take it. Taking the drug at the same time each day may help you to remember to take each dose. It may also be helpful to keep a dosage calendar record of each day's doses.

If you ***miss a dose***, take it as soon as possible. If you do not remember until the next day, do not take two doses, take only the one scheduled. Never take a double dose of warfarin. If you miss two or more days' doses, call your doctor.

Warning Signals

Even patients who take warfarin as scheduled can have serious bleeding. Call your doctor *IMMEDIATELY* if any of these signals occur:

- unusual nosebleeds or bloody gums after brushing your teeth
- prolonged bleeding from cuts, a heavy menstrual period or blood oozing from a clot
- vomiting or spitting blood that looks either red or brown and resembles coffee grounds
- sudden appearance of black and blue marks on the skin
- black or bloody bowel movements or red or dark brown urine
- new or unexpected pain like headaches, stomach pain, or backaches

All these could be signs of too much warfarin in your body.

Cautions

Other Drugs: ***Before you start or stop taking any other drugs***, tell your doctor or pharmacist you are taking warfarin. Many drugs like aspirin, drugs for the treatment of arthritis and muscle pains, phenobarbital, antibiotics, clofibrate, disulfiram, phenylbutazone, phenytoin, thyroid hormones and others interact with warfarin. These drug interactions can cause dangerous bleeding or interfere with the beneficial effect of warfarin.

Lab Tests: It is important to have frequent blood tests to find out how long it takes your blood to clot. On the basis of these tests, the amount of warfarin you take may need to be changed. Be sure to keep all appointments.

Eating/Drinking: Avoid excessive use of alcohol while taking warfarin. Alcohol can cause stomach irritation and more bleeding. Ask your doctor how much, if any, alcohol you may drink while taking warfarin. Some foods change the effect of the drug. Do not make any major changes in diet, especially fish, liver, onions, spinach, kale, cauliflower, and cabbage. These foods contain Vitamin K which reduces the effect of warfarin.

Surgery and Dental Work: Your doctor and dentist should know that you are taking warfarin before you have surgery or dental work.

Other Illnesses: Any illness that causes vomiting, diarrhea, or fever can change the effect of the drug. Contact your doctor if these symptoms continue for a couple of days.

Possible Side Effects

Warfarin can cause bothersome side effects. These include rash, hives, loss of hair, fever, nausea, vomiting, and diarrhea. If these problems last for more than a few days, call your doctor.

Other Information

Many doctors and pharmacists can give you a card stating that you are being treated with warfarin. Some people wear bracelets with this information. You should always have a card or bracelet with you in case of an accident or emergency.

The safe and effective use of this drug depends on your taking it as directed. Do not give this drug to others who may have similar symptoms or use it for any other reason.

In the event of an accidental overdose, contact your doctor, poison control center or nearest hospital emergency room immediately. Because of the severe effects of an overdose, keep this medicine out of the reach of children.

If you would like more information, ask your doctor or pharmacist. They have a more technical leaflet (called a package insert) they can let you read. You may need their help to understand it.

Thiazide
(pronounced: THYE-a-zide)

Summary

Thiazides are a group of drugs commonly used for high blood pressure and to reduce excess fluid in the body. Thiazides can control but not cure high blood pressure and excess fluid. Unless your doctor tells you to stop, continue to take this drug even if you feel good.

Some side effects may occur within the first few days of taking the drug but they often go away a few days later. While taking thiazides, body salts such as potassium can get too low. If you notice signs such as muscle

cramps, nausea, or weakness, call your doctor right away.

The rest of this leaflet gives you more information about thiazide drugs. Please read it and keep it for future use.

Why Take Thiazides?

There are two major uses for thiazide drugs. They treat high blood pressure and keep it under control. They also help the body get rid of excess salt and water. This excess fluid or edema may be due to heart, liver, or kidney disease or may be a side effect of taking other drugs, such as estrogens or cortisone-like drugs. Thiazides are also used for other conditions as determined by your doctor.

It is important to take the drug even if you feel good. If you have edema or high blood pressure, you will usually have to take this drug and possibly others for the rest of your life. Symptoms of too much fluid and salt in the body are shortness of breath and swelling of the hands and feet. High blood pressure usually has no symptoms but if not treated can cause serious complications including an increased risk of a stroke, kidney problems, or heart disease.

Before Taking Thiazides

Before starting thiazide drugs be sure to tell your doctor if you have:

- ever had an allergic reaction to these drugs in the past or are allergic to other drugs containing sulfa such as drugs for the treatment of diabetes and infections. Patients who are allergic to other drugs or have asthma may be more likely to be allergic to thiazides.
- any kidney disease. If your kidneys are not working properly, the amount or the type of drug you are taking may need to be changed.
- liver disease. The loss of potassium, sodium, chloride, and water caused by thiazide can sometimes worsen problems for people with liver disease.
- diabetes. Thiazides can increase blood sugar. A change in diet or dose of diabetes medicine may be needed.
- gout. Thiazides can cause a gout attack.
- Lupus erythematosus. Thiazides can sometimes worsen or activate lupus erythematosus.
- been taking other drugs such as cortisone, digitalis

heart medicines, lithium carbonate, and diabetic drugs. The effects from these drugs can be changed by taking a thiazide diuretic.

Cautions—Pregnancy and Breast Feeding

Tell your doctor if you are pregnant or plan to become pregnant. Unless you have high blood pressure or a serious complication of pregnancy, you should not use this drug while pregnant.

Thiazide drugs may pass in breast milk from mother to infant. If you must take a thiazide, it is recommended you stop nursing.

How To Take Thiazides

Take thiazide (along with any other drugs prescribed for edema or high blood pressure) at the same time on scheduled days. Unless your doctor tells you otherwise, take thiazide in the morning. If you forget to take a dose and remember late at night, skip that day's dose. Take the next dose at the regularly scheduled time.

If you take two doses a day, take the second one before 6 p.m. to avoid having to go to the bathroom after you go to bed. If you miss the first dose, take only your usual amount at the second dose. Do not take two doses at the same time.

Potassium Loss

After taking thiazides, you may need to urinate more often. This is due to thiazide getting rid of excess water. In addition water, thiazide also causes the body to lose mineral salts such as sodium, chloride and especially potassium. If you lose too much of these substances, some symptoms may appear. If you notice any of these, call your doctor right away:

excess thirst, tiredness, drowsiness, restlessness, muscle pains or cramps, nausea, vomiting and increased heart rate or pulse.

It may be necessary to eat foods rich in potassium (such as bananas, oranges and other fruits) or take a potassium supplement. If you are taking a thiazide in combination with certain other diuretic drugs, this combination may cause your body to save potassium.

Possible Side Effects

Side effects of thiazides are not too common and often go away after your body gets used to the drug. If side effects become bothersome or last for more than a few days, call your doctor. You may become dizzy, or lightheaded, especially when standing up or lying down. Taking alcohol and certain drugs (such as narcotic pain medicine and phenobarbital) can increase the chance of this side effect occurring.

Other side effects include allergic reactions such as: skin rash or hives and increased sensitivity to sunlight (that can lead to severe sunburn or a rash); reduced appetite, indigestion, nausea, vomiting, stomach cramps, or diarrhea; and headache, dizziness, or blurred vision.

Other Information

While taking thiazides avoid too much heat that can cause loss of water and salt by sweating. If you work in a hot place or travel to a hot area tell your doctor.

The safe and effective use of this drug depends on your taking it as directed. This drug has been prescribed specifically for you. Do not give this drug to others who may have similar symptoms.

In the event of an accidental overdose, contact your doctor, poison control center or nearest hospital emergency room immediately. Keep this and all drugs out of the reach of children.

If you would like more information, ask your doctor or pharmacist. They have a more technical leaflet (called a package insert) they can let you read. You may need their help to understand it.

BILLING CODE 4110-03-C

Interested persons may submit written comments by October 27, 1980 on the draft guidelines to the Hearing Clerk (HFA-305), Food and Drug Administration, Rm. 4-62, 5600 Fishers Lane, Rockville, MD 20857. If comments are not written directly on the Federal Register copy, please identify them with the Hearing Clerk docket number found in brackets in the heading of this document. Received comments may be seen in the Hearing Clerk's office between 9 a.m. and 4 p.m., Monday through Friday.

Dated: September 8, 1980.

Jere E. Goyan,

Commissioner of Food and Drugs.

[FR Doc. 80-28065 Filed 9-10-80; 3:44 pm]

BILLING CODE 4110-03-M

Federal Register

Friday
September 12, 1980

Part VI

Department of Housing and Urban Development

Office of Assistant Secretary for Housing—Federal Housing Commissioner

Delegations of Authority; Revision and Update

DEPARTMENT OF HOUSING AND URBAN DEVELOPMENT

Office of Assistant Secretary for Housing—Federal Housing Commissioner

[Docket No. D-80-619]

Delegations of Authority; Revision and Update

AGENCY: Department of Housing and Urban Development.

ACTION: Notice of delegation of authority.

SUMMARY: The Assistant Secretary for Housing—Federal Housing Commissioner is revising and updating the programmatic redelegations of authority setting forth responsibilities for programs and functions authorized by the various Housing Statutes, Executive Orders and Intergovernmental Agreements. This revision is necessitated by major reorganizational changes, effecting realignment of programmatic responsibility. A withdrawal of the codified delegations presently contained in title 24, Chapter II, Subpart D, but which are superseded by this notice of delegation has been prepared and will be published in the near future under the rules and regulations section.

EFFECTIVE DATE: September 12, 1980.

FOR FURTHER INFORMATION CONTACT: Barbara Hunter, Office of Management, Department of Housing and Urban Development, 451 Seventh Street, S.W., Washington, D.C. 20410, (202) 755-6623. This is not a toll free number.

SUPPLEMENTARY INFORMATION: These redelegations of authority supersede all previously published programmatic redelegations of authority, for Headquarters, with respect to the powers and authorities to administer the Multifamily Housing Programs as described herein. Since the revision involves only internal matters of agency management, it does not require comment or public procedure. Accordingly, the redelegations of authority for Headquarters Multifamily Housing programmatic responsibilities and functions are revised to read as follows:

Deputy Assistant Secretary for Multifamily Housing Programs, et al.

Redelegations of Authority

Section A. Deputy and Associate Deputy Assistant Secretary for Multifamily Housing Programs. To the position of Deputy Assistant Secretary for Multifamily Housing Programs, and to the Associate Deputy Assistant Secretary for Multifamily Housing Programs, there is redelegated the following authority:

To exercise the authority of the Assistant Secretary for Housing—Federal Housing Commissioner with respect to the multifamily programs and functions of the following:

- Titles II, V, VI, VII, VIII, IX, X, XI of the National Housing Act (12 U.S.C. 1701 et seq.).
- Section 202 of the Housing Act of 1959 (12 U.S.C. 1701q) with respect to the program of loans for Housing for the Elderly or Handicapped.
- Section 101 of the Housing and Urban Development Act of 1965 (12 U.S.C. 1701s), with respect to the Rent Supplement program for disadvantaged persons, including the authority to administer contracts and requirements for rent supplements.
- Section 207 of the Appalachian Regional Development Act of 1965 (40 U.S.C. Appendix A, Section 207) for expenses of planning and of obtaining an insured mortgage for a housing project under Section 221 or 236 of the National Housing Act (12 U.S.C. 1715L and 1715Z-1).
- Section 8 Housing assistance under the United States Housing Act of 1937 (42 U.S.C. 1401 et seq.), as amended, including the authority delegated under Executive Order 11196, to approve the undertaking of any annual contribution, grant or loan, or any agreement or contract for any annual contribution, grant or loan, with the following exceptions:

(Sec. 8 Existing (except for the Loan Management and Property Disposition Special Allocation Programs), and Moderate Rehabilitation)

- Compensation of condemnees under sections 402 and 403 of the Housing and Urban Development Act of 1965 (42 U.S.C. 3072 and 3073) and Title III of the Uniform Relocation Assistance and Real Property Acquisitions Policies Act of 1970 (Public Law 91-646, 84 Stat. 1904), and grants for relocation payments under section 404 of the Housing and Urben Development Act of 1965 (42 U.S.C. 3074).
- Section 1004 of the Demonstration Cities and Metropolitan Development Act of 1966 (42 U.S.C. 3371) with respect to the program of loan or grant assistance for housing in Alaska, except the authority to approve the Statewide program prepared by the State of Alaska or any duly authorized agency or instrumentality.
- Delegation of Authority under Article VII of the agreement between the Department of Defense and the Department of Housing and Urban Development dated June 8 and June 18, 1968, respectively (published at 34 FR 18031, (Nov. 7, 1969)) concerning section 1013 of the Demonstration Cities and Metropolitan Development Act of 1966 (42 U.S.C. 3374): With respect to acquired properties to acquire title to, hold, manage, sell for cash or credit by taking a purchase money mortgage in the name of the Secretary of Housing and Urban Development and in connection therewith to execute deeds of conveyance and all other instruments necessary to fulfill the purposes of section 1013 of the Demonstration Cities and Metropolitan Development Act of 1966 (42 U.S.C. 3374) and to make any or all determinations and to take any or all further actions in connection with acquired properties which the Secretary of Defense is authorized to undertake pursuant to the provisions of the Act.
- Section 234 of the National Housing Act with respect to Condominium housing.
- Title IV of the Housing Act of 1949 (42 U.S.C. 1441), with respect to condominium housing.

Section 106(a) of the Housing and Urban Development Act of 1968 (12 U.S.C. 1701X), for the provision of information and technical assistance with respect to the construction and rehabilitation by public bodies, nonprofit organizations or cooperative organizations of housing for low or moderate income families including assistance with respect to self-help and mutual self-help programs.

- Section 201 of the Housing and Community Development Amendments of 1978, with respect to providing operating assistance (flexible subsidies) to troubled multifamily projects.
- Section 802 of the Housing and Community Development Act of 1974, State Agency Housing Programs.

Specific responsibilities under these programs include the authority:

1. To approve and issue commitments and modifications of commitments for mortgage insurance, and to insure mortgages, under any multifamily insured or state agency and bond financed housing program.
2. To approve the extension of construction contracts, change orders and advances for construction, planning and land acquisition.
3. To approve or disapprove New Construction or Substantial Rehabilitation projects, and Existing Loan Management and Property Disposition Special Allocation Program set-aside under Section 8 of the Housing Act of 1937, as amended, including preliminary and final proposals; to execute HAP agreements; to authorize increases and amendments to such HAP

agreements; to approve requests for acceptance of projects upon completion of construction; and to executive HAP contracts.

4. To approve use of 120 percent of published Fair Market Rents.

5. To approve cost certification submissions; and to approve high cost factors.

6. To approve loans and grants under Section 207 of the Appalachian Regional Development Act of 1965, to nonprofit, limited dividend or cooperative organizations, or to public bodies for expenses of planning and of obtaining an insured mortgage for a housing construction or substantial rehabilitation project, under Section 221 or 236 of the National Housing Act, in any area of the Appalachian region determined by the Appalachian Regional Commission to have significant potential for future growth.

7. To approve applications for and to make mortgage interest assistance payments.

8. To authorize refunds of fees.

9. To approve waiver of interest on loans made to nonprofit organizations, and to approve or disapprove waiver of loans repayment, in whole or in part, under Section 207 of the Appalachian Regional Development Act of 1965, as amended.

10. To approve or disapprove loans for housing for the Elderly or Handicapped under Section 202 of the Housing Act of 1959, including full authority to make contracts, sign and execute agreements, and take any action incident thereto.

11. To approve loans to nonprofit sponsors or organizations for necessary expenses, prior to construction of planning and of obtaining financing, for rehabilitation or construction of multifamily housing.

12. To approve and insure loans to provide rental or cooperative housing and related facilities including loans under Section 526 of the National Housing Act of 1949, as amended, to provide condominium housing, for persons and families of low income in multifamily housing, and to approve and contract to make, assistance payments to the owners of such housing.

13. To determine feasibility and issue commitments for mortgage insurance under Section 236 of the National Housing Act, and to insure such mortgages pursuant to such commitments, including approval of insured advances during construction.

14. To approve or disapprove, following initial endorsement, increases in project mortgage amounts.

15. To approve and issue feasibility letters, and site appraisal and market analysis (SAMA) letters.

16. To approve financial requirements for closing and execute and approve effective date Section 236 interest reduction payments contracts.

17. To issue commitments and mortgage insurance certificates for the HUD State Agency Co-Insurance Program.

18. To approve or disapprove Housing Finance and Development Agencies for participation in the HUD State Agency Co-Insurance and Section 8 programs.

19. To take corrective actions, necessary for the satisfactory performance of State Agencies or for the operations of State Agency programs.

20. To approve or contract to make interest subsidy grants to or on behalf of State Housing Finance or State Development Agencies to cover not to exceed 33⅓ per centum of the interest payable on bonds, debentures, notes and other obligations issued by such agencies to finance development activities.

21. To approve selection of or modifications to Neighborhood Strategy Areas.

22. To administer annual contribution contracts under section 8 of the U.S. Housing Act of 1937, as amended, for New Construction or Substantial Rehabilitation Projects where there is a private owner/PHA arrangements; to waive the provisions of Annual Contribution Contracts for New Construction, Substantial Rehabilitation, and State Agency conflict of interest provisions for individuals who voluntarily acquire an interest in the program or in a project, or who had acquired, prior to the beginning of their tenure, any such interest.

23. To approve or modify increases of rents or carrying charges.

24. To approve the transfer of physical assets of a nonprofit corporation to a limited dividend corporation.

25. To approve flexible subsidy contracts when unit costs are $5,000 or more.

26. To approve and execute management agreements and to take action necessary with respect to violation of corporate charters, management, and regulatory agreement provisions; and to amend regulatory agreement provisions.

27. To approve increases in Rent Supplement Contracts.

28. To approve increases in Section 236 Rental Assistance Contracts.

29. To grant extensions of the time within which a mortgagee must take any action required by the insured multifamily program regulations.

30. To approve forbearance and recasting arrangements of insured mortgages.

31. To approve forbearance and recasting arrangements of Secretary-held mortgages, to take necessary action to preserve the security, and to approve and execute releases, assignments, and satisfactions of such mortgages and other liens.

32. To approve the modification in the terms of the payment term of HUD-held mortgages or authorize the foreclosure of any project mortgage acquired and held as a result of assignment under the terms of the insurance contract or taken back and held in connection with the sale of an acquired property.

33. To approve the acceptance of an offer of a deed-in-lieu of foreclosure.

34. To approve and execute provisional work out arrangements for the continued holding of project mortgages although in default.

35. To exercise the authority of the Assistant Secretary for Housing—Federal Housing Commissioner as holder of the preferred stock in any corporation or under any regulatory agreement or other agreement made for the purpose of controlling or regulating a housing project on which there is a mortgage held or insured by the Secretary.

36. To waive the fees for transfer of physical assets in the sale of property where there is an insured mortgage or where there is a HUD-held mortgage.

37. To waive all or part of the 1-percent deduction upon assignment of a project mortgage to the Secretary.

38. To determine that the decision or delay of a local rent control board, or other authority regulating rents pursuant to state or local law, in approving a rental increase in an unsubsidized project with a mortgage insured or held by the Department will jeopardize the Departments' economic interest in the project, and to issue a formal certification that the Department has preempted local rent controls as to the rentals of such project in order to protect the Departments' economic interest in the project.

39. To approve prepayment of mortgages.

40. To approve offers to rent or purchase, except that offers to purchase 12 or more living units acquired by the Secretary under any Title of the National Housing Act (12 U.S.C. 1701 et seq.) shall be subject to the approval of the Department's Property Disposition Committee.

41. To approve and contract to make repairs, alternations and improvements on acquired projects; to compromise and settle claims by or against HUD with respect to such properties; and to execute releases and other instruments

required in connection with such compromise or settlement.

42. In connection with the sale, rental, maintenance, or management of acquired properties or properties of the United States over which the Secretary has been granted custody or possession by another agency of the United States or properties held as mortgagee in possession, to execute contracts for supplies and services and to issue orders for the publication of notices and advertisements in various media as deemed necessary for management, operation and disposition of acquired properties.

43. To approve offers to rent or purchase projects acquired in connection with HUD insurance claims and properties over which the Secretary has been granted custody or possession by another agency of the United States; to approve the terms of mortgages taken as security in connection with such sales; and to execute such contracts, leases, assignments, and instruments as may be necessary in the rental or sale of such properties, including deeds or other documents in connection with the conveyance of title.

44. To compromise and settle claims by or against tenants or former tenants of HUD-acquired properties, as well as properties held by HUD as mortgagee in possession, and execute releases or other instruments required in connection with such compromise or settlement.

45. To compromise and settle contract claims by or against HUD with respect to acquired properties and execute releases and other instruments required in connection with such compromise or settlement.

46. To approve expenditures to correct or compensate for defects in multifamily properties sold by the Secretary to comply with any warranty provisions incorporated in the sales contract and to initiate such action as might be indicated.

47. To enter into and administer procurement contracts for multifamily housing and make related determinations except determinations under Sections 302(c))(11), (12), and (13), of the Federal Property and Administrative Services Act, as amended (41 U.S.C. 252(c)(11), (12), and (13), with respect to all contracts for goods and services for repair, construction, improvement, removal, demolition or alteration, maintenance, and operation of acquired properties, including properties held by HUD as mortgagee in possession, and broker management services in connection with such properties, the publication of notices and advertisements in various media as deemed necessary for management, operation, and disposition of acquired properties; and contracts for credit reports.

48. To exercise the functions, powers, and duties authorized by Executive Order 10657 of February 14, 1956 (21 FR 1063, Feb. 16, 1956), as amended by Executive Order 10734 of October 17, 1957 (22 FR 8275, October 22, 1957), and Executive Order 11105 of April 18, 1963 (28 FR 3903, April 20, 1963), with respect to servicing mortgages and the disposition of certain Government-owned property at the Atomic Energy Commission Communities of Oak Ridge, Tenn., Richland, Washington, and Los Alamos, New Mexico, pursuant to the Atomic Energy Community Act of 1955, as amended (42 U.S.C. 2301), except the Secretary's power to make the finding required under Section 51 of the Act (42 U.S.C. 2341).

49. To endorse any checks or drafts in payment of insurance losses on which the United States of America is a payee.

Section B. Director and Deputy Director, Office of Mutifamily Housing Development. To the position of Director, Office of Multifamily Housing Development, and to the Deputy Director, Office of Multifamily Housing Development, there is redelegated the following authority for all Multifamily loan origination and development programs, except as they pertain to State Agencies and as further excepted under Sections A and I.

1. To approve and issue commitments and modifications of commitments for mortgage insurance, and to insure mortgages, under any multifamily insured housing and direct loan programs.

2. To approve the extension of construction contracts, change orders and advances for construction, planning and land acquisition.

3. To approve or disapprove New Construction or Substantial Rehabilitation projects under Section 8 of the U.S. Housing Act of 1937, as amended, including preliminary and final proposals; to execute HAP agreements; to authorize increases and amendments to such HAP agreements; to approve requests for acceptance of projects upon completion of construction; and to execute HAP contracts.

4. To approve use of 120 percent of published Fair Market Rents.

5. To approve cost certification submissions; and to approve high cost factors.

6. To approve loans and grants under Section 207 of the Appalachian Regional Development Act of 1965, to nonprofit, limited dividend or cooperative organizations, or to public bodies for expenses of planning and of obtaining an insured mortgage for a housing construction or substantial rehabilitation project, under Section 221 or 236 of the National Housing Act, in any area of the Appalachian region determined by the Appalachian Regional Commission to have significant potential for future growth.

7. To approve applications for and to make interest assistance payments.

8. To authorize refunds of fees.

9. Prior to final endorsement of the mortgage, approve waiver of interest on loans made to nonprofit organizations and approve or disapprove waiver of loan repayment, in whole or in part, under Section 207 of the Appalachian Regional Development Act of 1965, as amended.

10. To approve or disapprove loans for Housing for the Elderly or Handicapped under Section 202 of the Housing Act of 1959, including full authority to make contracts, sign and execute agreements, and take any action incident thereto.

11. To determine feasibility and issue commitments for mortgage insurance under Section 236, and to ensure such mortgages pursuant to such commitments, including approval of insured advances during construction.

12. To approve or disapprove, following initial endorsement, increases in project mortgage amounts.

13. To approve or modify increases of rents or carrying charges prior to final endorsement.

14. To approve forbearance and recasting arrangements of insured mortgages; prior to final insurance endorsement, to take necessary action to preserve the security during the construction phase, and to approve and execute releases, assignments, and satisfactions of such mortgages and other liens.

15. To approve and issue feasibility letters and site appraisal and market analysis (SAMA) letters.

16. To approve financial requirements for closing and execute and approve effective date interest reduction payment contracts.

17. To approve selection of or modification to Neighborhood Strategy Areas.

18. To approve and insure loans to provide rental or cooperative housing and related facilities including loans under Section 526 of the National Housing Act of 1949, as amended, to provide condominimum housing, for persons and families of low income in multifamily housing, and to approve and contract to make, assistance payments to the owners of such housing.

19. To approve loans to nonprofit sponsors or organizations for necessary

expenses, prior to construction of planning and of obtaining financing for the rehabilitation or construction of multifamily housing.

20. To administer annual contribution contracts under Section 8 of the U.S. Housing Act of 1937, as amended, for New Construction or Substantial Rehabilitation Projects where there is a private owner/PHA arrangement; to waive the provisions of Annual Contribution Contracts for New Construction or Substantial Rehabilitation conflict of interest provisions for individuals who voluntarily acquire an interest in the program or in a project, or who had acquired, prior to the beginning of their tenure, any such interest.

Section C. Director and Deputy Director, Office of State Agency and Bond Financed Programs. To the positions of Director, Office of State Agency and Bond Financed Programs, and to the Deputy Director, Office of State Agency and Bond Financed Programs, there is redelegated the following authority; with the exceptions under Sections A and I.

1. To issue commitments and mortgage insurance certificates for the HUD State Agency Co-Insurance Program.

2. To approve or disapprove Housing Finance and Development Agencies for participation in the HUD State Agency Co-Insurance Program.

3. To approve or disapprove Housing Finance and Development Agencies for participation in the HUD State Agency Section 8 Program.

4. To take corrective actions necessary for the satisfactory operation of State Agencies.

5. To approve or contract to make interest subsidy grants to or on behalf of State Housing Finance or State Development Agencies to cover not to exceed 33⅓ per centum of the interest payable on bonds, debentures, notes and other obligations issued by such agencies to finance development activities.

6. To administer Annual Contribution Contracts under section 8 of the U.S. Housing Act of 1937, as amended, for state agency projects where there is a private owner/PHA arrangement; to waive the provisions of Annual Contribution Contracts for State Agency conflict of interest provisions for individuals who voluntarily acquire an interest in the program or in a project, or who had acquired, prior to the beginning of their tenure any such interest.

Section D. Director and Deputy Director, Office of Multifamily Housing Management and Occupancy. To the position of Director, Office of Multifamily Housing Management and Occupancy, and to the Deputy Director, Office of Multifamily Housing Management and Occupancy, there is redelegated the following authority for all multifamily loan management programs, except as it pertains to State Agencies and as further excepted under Sections A and I.

1. To grant extensions of time within which the mortgagee must make its election either to assign the mortgage or to tender title to the property under the contract of mortgage insurance.

2. To approve and execute forbearance agreements or the modification in the terms of project mortgages subsequent to final insurance endorsement under the terms of the insurance contract, including the approval of a one percent interest rate during the term of the modification.

3. To exercise the authority of the Assistant Secretary for Housing-Federal Housing Commissioner as holder of the preferred stock in any corporation or under any regulatory agreement or other agreement made for the purpose of controlling or regulating a housing project on which there is a mortgage insured by HUD.

4. To waive the fees for transfer of physical assets in the sale of property on which there is an insured mortgage.

5. To approve or modify increases of rents or carrying charges, subsequent to final endorsement.

6. To approve or disapprove Loan Management set-aside under the Special Allocation Program, under Section 8, Existing, of the U.S. Housing Act of 1937, as amended, including preliminary and final proposals; to execute HAP agreements; to authorize increases and amendments to such HAP agreements; and to execute HAP contracts.

7. To authorize increases and amendments to HAP agreements, after final endorsement, for New Construction and Substantial Rehabilitation projects under Section 8 of the U.S. Housing Act of 1937, as amended; and to execute HAP contracts.

8. Subsequent to final endorsement of the mortgage, to approve waiver of interest on loans made to nonprofit organizations, and approve or disapprove waiver of loan repayment, in whole or in part, under Section 207 of the Appalachian Regional Development Act of 1965, as amended.

9. To approve the transfer of physical assets of a nonprofit corporation to a limited dividend corporation, on an insured mortgage project.

10. To determine that a decision or delay of a local rent control board, or other authority regulating rents pursuant to State or local law, in approving a rental increase in an unsubsidized project with a mortgage insured or held by the Department will jeopardize the Department's economic interest in the project, and to issue a formal certification that the Department has preempted local rent controls as to the rentals of such project in order to protect the Department's economic interest in the project.

11. To take action necessary for the preservation of an insured mortgage security.

12. To approve prepayment of an insured mortgage.

13. To approve Flexible Subsidy contracts when unit costs are $5,000 or more.

14. To approve and execute management agreements and to take action necessary with respect to violation of corporate charters, management, and regulatory agreement provisions; and to amend regulatory agreement provisions.

15. To approve increases in Rent Supplement contracts.

16. to approve increases in Section 236 rental assistance contracts.

Section E. Director and Deputy Director, Office of Multifamily Financing and Preservation. To the position of Director, Office of Multifamily Financing and Preservation, and to the Deputy Director, Office of Multifamily Financing and Preservation, there is redelegated the following authority for multifamily financing and preservation, except as it pertains to State Agencies, and as further excepted under Sections A and I.

1. To approve forbearance and recasting arrangements of Secretary-held mortgages, to take necessary action to preserve the security after assignment and to approve and execute releases, assignments, and satisfactions of such mortgages and other liens.

2. To approve the modification in the terms of the payment term of HUD-held mortgages or authorize the foreclosure of any project mortgage acquired and held as a result of assignment under the terms of the insurance contract or taken back and held in connection with the sale of an acquired property.

3. To approve the acceptance of an offer of a deed in lieu of foreclosure.

4. To approve and execute provisional work out arrangements for the continued halding of project mortgages although in default.

5. To exercise the authority of the Assistant Secretary for Housing—Federal Housing Commissioner as holder of the preferred stock in any corporation or under any regulatory agreement or other agreement made for the purpose of controlling or regulating a

housing project on which there is a mortgage held by the Secretary.

6. To approve prepayment of HUD-held mortgages.

7. To service loans for Housing for the Elderly or Handicapped under Section 202 of the Housing Act of 1959.

8. To service loans or grants to educational institutions for the construction or purchase of housing or facilities for students or faculties, under the National Housing Act of 1950.

9. To approve or disapprove Property Disposition set-aside under the Special Allocation Program, under Section 8 of the U.S. Housing Act of 1937, as amended, including preliminary and final proposals; to execute HAP agreements; to authorize increases and amendments to such HAP agreements; and to execute HAP contracts.

10. To waive the fees for transfer of physical assets in the sale of property on which there is a HUD-held mortgage.

11. To approve the transfer of physical assets of a nonprofit corporation to a limited dividend corporation on a project with a HUD-held mortgage.

12. To waive all or part of the 1-percent deduction upon assignment of a project mortgage to the Secretary.

13. To approve offers to rent or purchase, except that offers to purchase 12 or more living units acquired by the Secretary under any title of the National Housing Act (12 U.S.C. 1701 et seq.) shall be subject to the approval of the Department's Property Disposition Committee.

14. In connection with the sale, rental, maintenance; or management of acquired properties or properties of the United States over which the Secretary has been granted custody or possession by another agency of the United States or properties held as mortgagee in possession, to execute contracts for supplies and services and to issue orders for the publication of notices and advertisements in various media as deemed necessary for management, operation and disposition of acquired properties.

15. To make repairs, alterations and improvements on acquired projects; to compromise and settle claims by or against HUD with respect to such projects; and to execute releases and other instruments required in connection with such compromise or settlement.

16. To approve offers to rent or purchase insured multifamily properties acquired in connection with HUD insurance claims and properties over which the Secretary has been granted custody or possession by another agency of the United States; to approve the terms of mortgages taken as security in connection with such sales; and to execute such contracts, leases, assignments, and instruments as may be necessary in the rental or sale of such properties, including deeds or other documents in connection with the conveyance of title.

17. To authorize refunds of fees.

18. To compromise and settle claims by or against tenants or former tenants of acquired projects, as well as properties held by HUD as mortgagee in possession, and execute releases or other instruments required in connection with such compromise or settlement.

19. To compromise and settle contract claims by or against HUD with respect to acquired projects and execute releases and other instruments required in connection with such compromise or settlement.

20. To approve expenditures to correct or compensate for defects in multifamily properties sold by the Secretary to comply with any warranty provisions incorporated in the sales contract and to initiate such action as might be indicated.

21. To enter into and administer procurement contracts, for multifamily housing and make related determinations except determinations under Sections 302(c)(11), (12), and (13) of the Federal Property and Administrative Services Act, as amended (41 U.S.C. 252(c)(11), (12), and (13)), with respect to all contracts for goods and services for repair, construction, improvement, removal, demolition or alteration, maintenance, and operation of acquired properties, including properties held by HUD as mortgagee in possession, and broker management services in connection with such properties, the publication of notices and advertisements in various media as deemed necessary for management, operation and disposition of acquired properties; and contracts for credit reports.

22. To execute the functions, powers, and duties authorized by Executive Order 10657 of February 14, 1956 (21 FR 1063, Feb. 16, 1956), as amended by Executive Order 10734 of October 17, 1957 (22 FR 8275, Oct. 22, 1957), and Executive Order 11105 of April 18, 1963 (28 FR 3909, Apr. 20, 1963), with respect to servicing mortgages and the disposition of certain Government-owned property at the Energy Commission Communities of Oak Ridge, Tenn., Richland, Wash., and Los Alamos, New Mexico, pursuant to the Atomic Energy Community Act of 1955, as amended (42 U.S.C. 2301), except the Secretary's power to make the finding required under Section 51 of the Act (42 U.S.C. 2341).

23. To endorse any checks or drafts in payment of insurance losses on which the United States of America is a payee.

Section F. Director, Reconditioning and Contracting Division. To the position of Director, Reconditioning and Contracting, there is redelegated the following authority for multifamily and single family procurement Contracts:

1. As contracting officer, to enter into and administer procurement contracts, for *both* multifamily and single family housing and make related determinations except determinations under Sections 302(c)(11), (12), and (13) of the Federal Property and Administrative Services Act, as amended (41 U.S.C. 252(c)(11), (12), and (13)), with respect to all contracts for goods and services for repair, construction, improvement, removal, demolition or alteration, maintenance, and operation of acquired properties, including properties held by HUD as mortgagee in possession, and broker management services in connection with such properties, the publication of notices and advertisements in various media as deemed necessary for management, operation and disposition of acquired properties; and contracts for credit reports.

Section G. Special Assistant for Cooperative Housing. To the position of Special Assistant for Cooperative Housing, there is redelegated the following authority:

To exercise the authority of the Assistant Secretary for Housing-Federal Housing Commissioner with respect to Cooperative Housing.

- Sections 213, 221(d)(3), 235, 236, 241, 243, 246, and 203(n) of the National Housing Act (12 U.S.C. 1701 et seq.), as amended.
- Section 101 of the Housing and Urban Development Act of 1965, as amended.
- Section 8 of the United States Housing Act of 1937, as amended.

The performance of the functions, powers, and duties as prescribed under these sections shall be exercised only insofar as the provisions of such sections relate to cooperative housing.

Section H. Conclusive evidence of authority. Any instrument or document executed in the name of the Secretary by an employee of the Department of Housing and Urban Development under the authority of this redelegation purporting to relinquish or transfer any right, title, or interest in or to real or personal property shall be conclusive evidence of the authority of such employee to act for the Secretary in executing such instrument or document.

Section I. Authority Excepted. There is excepted from the authority

redelegated under Sections A through G, the power to:

1. Establish the rate of interest on Federal loans.

2. Issue notes or other obligations for purchase by the Secretary of the Treasury.

3. Exercise the powers under Section 402(a) of the Housing Act of 1950, as amended (12 U.S.C. 1749a(a)).

4. Sue and be sued.

5. Issue rules and regulations.

6. Exercise the authority to perform the technological aspects of experimental housing under Section 233 of the National Housing Act (12 U.S.C. 1715x), including determination of the technological acceptability of proposals and evaluation and dissemination of result.

Section J. Exercise of Redelegated Authority. Redelegations of Authority made under Sections A through H shall not be construed to modify or otherwise affect the outstanding authority redelegated to the Regional and Field Offices.

(Sec. 7(d), Department of Housing and Urban Development Act (42 U.S.C. 3535(d)); Secretary's authority to redelegate published at 36 FR 5005 (1971); 36 FR 5007 (1971); 41 FR 32635 (1976); and 41 FR 24755 (1976))

Issued at Washington, D.C. September 4, 1980.

Clyde McHenry,

Deputy Assistant Secretary for Housing-Federal Housing Commissioner.

[FR Doc. 80-28129 Filed 9-11-80; 8:45 am]

BILLING CODE 4210-01-M

[Docket No. D-80-618]

Delegations of Authority; Revision and Update

AGENCY: Department of Housing and Urban Development.

ACTION: Notice of delegation of authority.

SUMMARY: The Assistant Secretary for Housing-Federal Housing Commissioner is revising and updating the programmatic redelegations of authority setting forth responsibilities for programs and functions authorized by the various Housing Statutes, Executive Orders and Intergovernmental Agreements. This revision is necessitated by major reorganizational changes, effecting realignment of programmatic responsibility. A withdrawal of the codified delegations presently contained in title 24, Chapter II, Subpart D, but which are superseded by this notice of delegation, has been prepared and will be published in the near future under the rules and regulations section.

EFFECTIVE DATE: September 12, 1980.

FOR FURTHER INFORMATION CONTACT: Barbara Hunter, Office of Management, Department of Housing and Urban Development, 451 Seventh Street, SW., Washington, D.C. 20410, (202) 755-6623. This is not a toll free number.

SUPPLEMENTARY INFORMATION: These redelegations of authority supersede all previously published programmatic redelegations of authority, for Headquarters, with respect to the powers and authorities to administer the Single Family Housing Programs and Mortgagee Activities as described herein. Since the revision involves only internal matters of agency managment, it does not require comment or public procedure. Accordingly, the redelegations of authority for Headquarters Single Family Housing and Mortgagee Activities programmatic responsiblities and functions are revised to read as follows:

Deputy Assistant Secretary for Single Family Housing and Mortgagee Activities, et al.

Redelegations of Authority

Section A. Deputy Assistant Secretary for Single Family Housing and Mortgagee Activities. To the position of Deputy Assistant Secretary for Single Family Housing and Mortgagee Activities, there is redelegated the following authority:

To exercise the authority of the Assistant Secretary for Housing-Federal Housing Commissioner with respect to the Single Family programs, and the authority with respect to Mortgagee Activities for both Single Family and Multifamily programs, of the following:

- Titles I, II, V, VI, VIII, IX, X of the National Housing Act (12 U.S.C. 1701 et seq.).
- Section 106(a) of the Housing and Urban Development Act of 1968 (12 U.S.C. 1701x), for the provision of information and technical assistance with respect to the construction and rehabilitation by public bodies, nonprofit sponsors or organizations or cooperative organizations of housing for low or moderate income families, including assistance with respect to self-help and mutual self-help programs.
- Compensation of Condemnees under Sections 402 and 403 of the Housing and Urban Development Act of 1965 (42 U.S.C. 3073) and Title III of the Uniform Relocation Assistance and Real Property Acquisitions Policies Act of 1970 (Public Law 91-646, 84 Stat. 1904), and grants for relocation payments under Section 404 of the Housing and Urban Development Act of 1965 (42 U.S.C. 3074).
- Section 1004 of the Demonstration Cities and Metropolitan Development Act of 1966 (42 U.S.C. 3371) with respect to the program of loan or grant assistance for housing in Alaska, except the authority to approve the statewide program prepared by the State of Alaska or any duly authorized agency or instrumentality.
- Delegation of authority under Article VII of the agreement between the Department of Defense and the Department of Housing and Urban Development dated June 8 and June 18, 1968, respectively (published at 24 FR 18031, (Nov. 7, 1969) concerning Section 1013 of the Demonstration Cities and Metropolitan Development Act of 1966 (42 U.S.C. 3374): With respect to acquired properties to acquire title to, hold, manage, sell for cash or credit by taking a purchase money mortgage in the name of the Secretary of Housing and Urban Development and, in connection therewith to execute deeds of conveyance and all other instruments necessary to fulfill the purposes of Section 1013 of the Demonstration Cities and Metropolitan Development Act of 1966 (42 U.S.C. 3374) and to make any or all determinations and to take any or all further actions in connection with acquired properties which the Secretary of Defense is authorized to undertake pursuant to the provisions of the Act.

Specific responsibilities under these programs include the authority:

1. To approve and issue commitments and modifications of commitments for mortgage insurance, and to insure mortgages, under any 1-to-4 family housing program and the Title X Land Development program.

2. To approve and issue feasibility letters.

3. To approve applications for and to make mortgage interest assistance payments.

4. To grant extensions of the time within which a mortgagee must take any action required by the 1-to-4 family and Title X regulations.

5. To approve the extension of construction contracts, change orders and advances for construction, planning and land acquisition under Title X.

6. To approve forbearance and recasting arrangements of insured mortgages.

7. To approve forbearance and recasting arrangements of Secretary-held mortgages, to take necessary action to preserve the security, and to approve and execute releases, assignments, and satisfactions of such mortgages and other liens.

8. To approve the acceptance of an offer of a deed-in-lieu of foreclosure.

9. To make repairs, alterations and improvements on acquired properties; to compromise and settle claims by or against HUD with respect to such properties; and to execute releases and other instruments required in connection with such compromise or settlement.

10. To approve offers to rent or purchase 1-to-4 family properties acquired in connection with HUD insurance claims and properties over which the Secretary has been granted custody or possession by another agency of the United States; to approve the terms of mortgages taken as security in connection with such sales; and to execute such contracts, leases, assignments, and instruments as may be necessary in the rental or sale of such properties, including deeds or other documents in connection with the conveyance of title.

11. To authorize refunds of fees.

12. To approve or disapprove those procurement contract actions entered into and administered by the Contracting Officer of the Multifamily Office of Financing and Preservation, pertaining single family housing, and to make related determinations except determinations under Sections 302(c)(11), and (13) of the Federal Property and Administrative Services Act, as amended (41 U.S.C. 252(c) (11), (12) and (13), with respect to all contracts for goods and services for repair, construction, improvement, removal, demolition or alteration, maintenance, and operation of acquired properties, including properties held by HUD as mortgagee in possession, and broker management services in connection with such properties, the publication of notices and advertisements in various media as deemed necessary for management, operation and disposition of acquired properties; and contracts for credit reports.

13. In connection with the sale, rental, maintenance, or management of acquired properties or properties of the United States over which the Secretary has been granted custody or possession by another agency of the United States or properties held as mortgagee in possession, to issue orders for the publication of notices and advertisements in various media as deemed necessary for management, operation and disposition of acquired properties.

14. To compromise and settle claims by or against tenants or former tenants of acquired properties, as well as properties held by HUD as mortgagee in possession, and execute releases or other instruments required in connection with such compromise or settlement.

15. To approve expenditures to correct or compensate for defects in Single Family properties sold by the Secretary to comply with any warranty provisions incorporated in the sales contract and for defects meeting requirements of Section 518 of the National Housing Act.

16. To endorse any checks or drafts in payment of insurance losses on which the United States of America is a payee.

17. To administer terms of regulatory agreements for condominums, after final endorsement of the mortgage.

18. To make the high cost determinations for the Federal National Mortgage Association prescribed in Section 305(g) of the National Housing Act.

19. To execute the functions, powers, and duties authorized by Executive Order 10657 of February 14, 1956 (21 FR 1063, Feb. 16, 1956), as amended by Executive Order 10734 of October 17, 1957 (22 FR 8275, Oct. 22, 1957), and Executive Order 11105 of April 18, 1963 (28 FR 3909, Apr. 20, 1963), with respect to servicing mortgages and the disposition of certain properties at the Atomic Energy Commission communities of Oak Ridge, Tennessee, Richland, Washington, and Los Alamos, New Mexico, pursuant to the Atomic Energy Community Act of 1955, as amended (42 U.S.C. 2301) except the Secretary's power to make the finding required under Section 51 of the Act (42 U.S.C. 2341.)

20. To grant prior credit approval under Title I of the National Housing Act and regulations thereunder.

21. To approve or cancel the approval of financial institutions to make Title I property improvement and mobile home loans; to issue or cancel contracts of insurance with such institutions.

22. To determine eligibility of innovative improvements for Title I financing.

23. To approve or disapprove, on matters other than liquidation of notes, the transfer of contracts and the rights and benefits accruing thereunder, between approved Title I and mobile home financial institutions.

24. To determine noncompliance with statutes, rules, regulations, policies and procedures governing Title I property improvement and mobile home loan operations; and to direct remedial action with respect to any dealer or contractor.

25. To execute documents necessary to transfer title in and to any debt, contract, claim, property, or security, and to execute compromise agreements.

26. To execute proofs of claim against bankrupt, insolvent or decedent estates, and to execute releases of obligations, including notes, judgements and other evidences of indebtedness, and to release liens of any sort held as security for such obligation, those areas where the obligation has been paid in full.

27. To present cases to the Substantial Compliance Committee together with recommendations for decisions on the payment of claims where regulations have been violated.

28. To take action necessary for the final disposition of "uncollectable" defaulted Title I loans either through foreclosure, write-off, or legal action against the debtor or his/her estate.

29. To review yearly financial statements and recertifications of approved mortgagees.

30. To present cases to the Department's Mortgagee Review Board together with recommendations on the appropriate action to be taken against mortgagees.

31. To approve or disapprove financial institutions as approved mortgagees, to originate and/or hold insured mortgages and of firms or individuals as authorized agents of such approved mortgagees; and to establish performance standards and maintain surveillance over the activities of such institutions as they relate to the origination or servicing of insured mortgages.

32. To take necessary action to suspend or withdraw approval of approved mortgagees, loan correspondents or authorized agents at the request of the financial institution involved.

Section B. Director and Deputy Director, Office of Single Family Housing. To the position of Director, Office of Single Family Housing and to the Deputy Director, Office of Single Family Housing there is redelegated the following authority:

1. To approve and issue commitments and modifications of commitements for mortgage insurance, and to insure mortgages, under any 1- to 4-family housing program and the Title X Land Development program.

2. To approve and issue feasibility letters.

3. To approve applications for and to make mortgage interest assistance payments.

4. To grant extensions of the time within which a mortgagee must take any action required by the 1-to-4 family and Title X regulations.

5. To approve the extension of construction contracts, change orders and advances for construction, planning and land acquisition under Title X.

6. To approve forbearance and recasting arrangements of insured mortgages.

7. To approve forbearance and recasting arrangements of Secretary-held mortgages, to take necessary action

to preserve the security, and to approve and execute releases, assignments, and satisfactions of such mortgages and other liens.

8. To approve the acceptance of an offer of a deed-in-lieu of foreclosure.

9. To make repairs, alterations and improvements on acquired properties; to compromise and settle claims by or against HUD with respect to such properties; and to execute releases and other instruments required in conection with such compromise or settlement.

10. To approve offers to rent or purchase 1-to-4 family properties acquired in connection with HUD insurance claims and properties over which the Secretary has been granted custody or possession by another agency of the United States; to approve the terms of mortgages taken as security in connection with such sales; and to execute such contracts, leases, assignments, and instruments as may be necessary in the rental or sale of such properties, including deeds or other documents in connection with the conveyance of title.

11. To authorized refunds of fees.

12. To approve or disapprove those procurement contract actions entered into and administered by the Contracting Officer of the Multifamily Office of Financing and Preservation, pertaining to single family housing, and to make related determinations except determinations under Section 302(c) (11), (12), and (13) of the Federal Property and Administrative Services Act, as amended (41 U.S.C. 252(c)(11), (12) and (13), with respect to all contracts for goods and services for repair, construction, improvement, removal, demolition or alteration, maintenance, and operation of acquired properties, including properties held by HUD as mortgagee in possession, and broker management services in connection with such properties, the publication of notices and advertisements in various media as deemed necessary for management, operation and disposition of acquired properties; and contracts for credit reports.

13. In connection with the sale, rental maintenance, or management of acquired properties or properties of the United States over which the Secretary has been granted custody or possession by another agency of the United States or properties held as morgagee in possession, to issue orders for the publication of notices and advertisements in various media as deemed necessary for management, operation and disposition of acquired properties.

14. To compromise and settle claims by or against tenants or former tenants of acquired properties, as well as properties held by HUD as mortgagee in possession, and execute releases or other instruments required in connection with such compromise or settlement.

15. To approve expenditures to correct or compensate for defects in Single Family properties sold by the Secretary to comply with any warranty provisions incorporated in the sales contract and for defects meeting the requirements of Section 518 of the National Housing Act.

16. To endorse any checks or drafts in payment of insurance losses on which United States of American is a payee.

17. To administer terms of regulatory agreements for condominiums, after final endorsement of the mortgage.

18. To make the high cost determinations for the Federal National Mortgage Association prescribed in Section 305(g) of the National Housing Act.

19. To execute the functions, powers, and duties authorized by Executive Order 10657 of February 14, 1956 (21 FR 1063, Feb. 16, 1956), as amended by Executive Order 10734 of October 17, 1957 (22 FR 8275, Oct. 22, 1957), and Executive Order 11105 of April 18, 1963 (28 FR 3909, Apr. 20, 1963), with respect to servicing mortgages and the disposition of certain properties at the Atomic Energy Commission communities of Oak Ridge, Tenn., Richland, Wash., and Los Alamos, New Mexico, pursuant to the Atomic Energy Community Act of 1955, as amended (42 U.S.C. 2301) except the Secretary's power to make the finding required under Section 51 of the Act (42 U.S.C. 2341).

Section C. Director and Deputy Director, Office of Mortgagee Activities. To the position of Director, Office of Mortgagee Activities, and to the Deputy Director, Office of Mortgagee Activities, there is redelegated the following authority:

1. To approve or disapprove financial institutions as approved mortgagees to originate and/or hold insured mortgages and of firms or individuals as authorized agents of such approved mortgagees; and to establish performance standards and maintain surveillance over the activities of such institutions as they relate to the origination of mortgages.

2. To approve or cancel the approval of financial institutions to make Title I Property Improvement and Mobil Home Loans.

3. To take necessary action to suspend or withdraw approval of approved mortgagees, loan correspondents or authorized agent at the request of the financial institution involved.

4. To review yearly financial statements and recertifications of approved mortgagees.

5. To monitor the activities of approved mortgagees relative to the origination of insured mortgages.

6. To monitor the activities of approved mortgagees relative to the servicing of insured mortgages.

7. To present cases to the Department's Mortgagee Review Board together with recommendations on the appropriate action to be taken against mortgagees.

Section D. Director and Deputy Director, Office of Title I Insured Loans and Director, Compliance and Liquidation Division. To the position of Director, Office of Title I Insured Loans; to the Deputy Director, Office of Title I Insured Loans; and to the Director, Compliance and Liquidation Division, there is redelegated the followng authority:

1. To grant prior credit approval under Title I of the National Housing Act and regulations thereunder.

2. To issue or cancel contracts of insurance with Title I and mobile home financing institutions.

3. To determine eligibility of innovative improvements for Title I financing.

4. To approve or disapprove, on matters other than liquidation of notes, the transfer of contracts and the rights and benefits accruing thereunder, between approved Title I and mobile home financial institutions.

5. To determine noncompliance with statutes, rules, regulations, policies and procedures governing Title I property Improvement and mobile home loan operations; and to direct remedial action with respect to any dealer or contractor.

6. To execute documents necessary to transfer title in and to any debt, contract, claim, property, or security, and to execute compromise agreements.

7. To excute proofs of claim against bankrupt, insolvent or decedent estates, and to execute releases of obligations, including notes, judgements and other evidences of indebtedness, and to release liens of any sort held as security for such obligation, in those areas where the obligation has been paid in full.

8. To present cases to the Substantial Compliance Committee together with recommendations for decisions on the payment of claims where regulations have been violated.

9. To take action necessary for the final disposition of "uncollectable" defaulted Title I loans either through foreclosure, write-off, or legal action against the debtor or his/her estate.

10. To endorse any checks or drafts in payment of insurance losses on which the United States of America is a payee.

Section E. Conclusive evidence of authority. Any instrument or document executed in the name of the Secretary by an employee of the Department of Housing and Urban Development under the authority of this redelegation purporting to relinquish or transfer any right, title or interest in or to real or personal property shall be conclusive evidence of the authority of such employee to act for the Secretary in executing such instrument or document.

Section F. Authority excepted. There is excepted from the authority redelegated under Sections A through D, the power to:

1. Establish the rate of interest on Federal loans.
2. Issue notes or other obligations for purchase by the Secretary of the Treasury.
3. Exercise the powers under Section 402(a) of the Housing Act of 1950, as amended (12 U.S.C. 1749a(a)).
4. Sue and be sued.
5. Issue rules and regulations.
6. Exercise the authority to perform the technological aspects of experimental housing under Section 233 of the National Housing Act (12 U.S.C. 1715x) including determination of the technological acceptability of proposals and evaluation and dissemination of results.

Section G. Exercise of Redelegated Authority. Redelegations of Authority made under Sections A through E shall not be construed to modify or otherwise affect the outstanding authorities redelegated to the Regional and Field Offices.

(Sec. 7(d), Department of Housing and Urban Development Act (42 U.S.C. 3535(d)); Secretary's authority to redelegate published at 36 FR 5005 (1971); 36 FR 5007 (1971); 41 FR 32635 (1976); and 41 FR 24755 (1976))

Issued at Washington, D.C., September 4, 1980.

Clyde McHenry,

Deputy Assistant Secretary for Housing—Federal Housing Commissioner.

[FR Doc. 80-28130 Filed 9-11-80; 8:45 am]

BILLING CODE 4210-01-M

[Docket No. D-80-617]

Delegations of Authority; Revision and Update

AGENCY: Department of Housing and Urban Development.

ACTION: Notice of delegation of authority.

SUMMARY: The Assistant Secretary for Housing-Federal Housing Commissioner is revising and updating the programmatic redelegations of authority setting forth responsibilities for programs and functions authorized by the various Housing Statutes, Executive Orders and Intergovernmental Agreements. This revision is necessitated by major reorganizational changes, effecting realignment of programmatic responsibility. A withdrawal of the codified delegations presently contained in title 24, Chapter II, Subpart D, but which are superceded by this notice of delegation, has been prepared and will be published in the near future under the rules and regulations section.

EFFECTIVE DATE: September 12, 1980.

FOR FURTHER INFORMATION CONTACT: Barbara Hunter, Office of Management, Department of Housing and Urban Development, 451 Seventh Street, S.W., Washington, D.C. 20410, (202) 755-6623. This is not a toll free number.

SUPPLEMENTARY INFORMATION: These redelegations of authority supersede all previously published programmatic redelegations of authority, for Headquarters, with respect to the powers and authorities to administer the Architectural and engineering Standards of the Housing Programs as described herein. Since the revision involves only internal matters of agency management, it does not require comment or public procedure. Accordingly, the redelegations of authority for Headquarters Architectural and Engineering Standards responsibilities and functions are revised to read as follows;

Office of Architecture and Engineering Standards, et al.

Redelegations of Authority

Section A. Director and Deputy Director, Office of Architecture and Engineering Standards. To the position of Director, Office of Architecture and Engineering Standards and to the Deputy Director, Office of Architecture and Engineering Standards, there is redelegated the following authority:

1. To prescribe standards for the design, construction, and alternation of structures for the programs under the National Housing Act (12 U.S.C. 1701 et seq.) as amended, and the United States Housing Act of 1937, (42 U.S.C. 1401 et seq.) as amended.
2. To approve or disapprove variances from the design or construction standards for all programs under the National Housing Act (12 U.S.C. 1701 et seq.) as amended, and the United States Housing Act of 1937, (42 U.S.C. 1401 et seq.).
3. To exercise the authority of the Assistant Secretary for Housing-Federal Housing Commissioner with respect to all matters and requirements of the Architectural Barriers Act of 1968, as amended, (42 U.S.C. 4151 et seq.) (hereafter referred to as the "Act") applicable to the Department of Housing and Urban Development, including the authority:

(a) To prescribe standards for the design, construction, and alteration of buildings which are residential structures subject to this Act to insure whenever possible that physically handicapped persons will have ready access to, and use of, such buildings.

(b) To modify or waive any such standard, on a case-by-case basis, upon a determination that such modification or waiver is clearly necessary.

4. To evaluate and determine the technical suitability of housing products and materials under Section 521 of the National Housing Act (12 U.S.C. 1701 et. seq.) and to issue engineering and technical bulletins governing the acceptability of housing system components, and materials and methods of construction.

Section B. Conclusive evidence of authority. Any instrument or document executed in the name of the Secretary by an employee of the Department of Housing and Urban Development under the authority of this redelegation shall be conclusive evidence of the authority of such employee to act for the Secretary in executing such instrument or document.

Section C. Authority Excepted. There is excepted from the authority redelegated under Section A, the power to issue rules and regulations.

Section D. Exercise of Redelegated Authority. Redelegations of Authority made under Sections A through B shall not be construed to modify or otherwise affect the outstanding authorities redelegated to the Regional and Field Offices.

(Sec. 7(d), Department of Housing and Urban Development Act 42 U.S.C. 3535(d); Secretary's authority to redelegate published at 36 FR 5005 (1971); 36 FR 5007 (1971); 41 FR 32635 (1976); and 41 FR 24755 (1976))

Issued at Washington, D.C., September 4, 1980.

Clyde McHenry,

Deputy Assistant Secretary for Housing, Federal Housing Commissioner.

[FR Doc. 80-28131 Filed 9-11-80; 8:45 am]

BILLING CODE 4210-01-M

[Docket No. D-80-616]

Delegations of Authority; Revision and Update

AGENCY: Department of Housing and Urban Development.

ACTION: Notice of delegation of authority.

SUMMARY: The Assistant Secretary for Housing—Federal Housing Commissioner is revising and updating the programmatic redelegations of authority setting forth responsibilities for programs and functions authorized by the various Housing Statutes, Executive Orders and Intergovernmental Agreements. This revision is necessitated by major reorganizational changes, effecting realignment of programmatic responsibility. A withdrawal of the codified delegations presently contained in title 24, Chapter II, Subpart D, but which are superseded by this notice of delegation, has been prepared and will be published in the near future under the rules and regulations section.

EFFECTIVE DATE: September 12, 1980.

FOR FURTHER INFORMATION CONTACT: Barbara Hunter, Office of Management, Department of Housing and Urban Development, 451 Seventh Street, S.W., Washington, D.C. 20410, (202) 755-6623. This is not a toll free number.

SUPPLEMENTARY INFORMATION: These regulations of authority supersede all previously published programmatic redelegations of authority, for Headquarters, with respect to the previous participation of principals for the Multifamily Housing Programs as described herein. Since the revision involves only internal matters of agency management, it does not require comment or public procedure. Accordingly, the redelegations of authority for Headquarters participant control and supervison responsibilities and functions are revised to read as follows:

Director, Office of Management, et al.

Redelegations of Authority

Section A. Director and Deputy Director, Office of Management. To the position of Director, Office of Management, the Deputy Director, Office of Management, and the Director, Participation and Compliance Division, there is redelegated the following authority:

To exercise the authority of the Assistant Secretary for Housing—Federal Housing Commissioner with respect to compliance by contractors or grantees involved in projects to be financed with mortgages to be insured under the National Housing Act and in connection with all Housing programs except those under Section 2, Title I of the National Housing Act. (12 U.S.C. 1701 et seq.)

Specific responsibilities under these programs include the authority:

1. To approve, with respect to the previous participation of principals, mortgage insurance proposals for Multifamily housing, nursing homes and intermediate care facilities, proprietary hospitals, group practice medical facilities and land development projects.
2. To present cases and relevant information to the Multifamily Participation Review Committee for determination.
3. To execute Committee decisions.
4. To initiate notifications of intent to debar, suspend, and declare ineligible contractors or grantees in connection with all Housing programs except those under Section 2, Title I of the National Housing Act. (12 U.S.C. 1701 et seq.).

Section B. Conclusive evidence of authority. Any instrument or document executed in the name of the Secretary by an employee of the Department of Housing and Urban Development under the authority of this redelegation shall be conclusive evidence of the authority of such employee to act for the Secretary in executing such instrument or document.

Section C. Authority Excepted. There is excepted from the authority redelegated under Section A, the power to:

1. Sue and be sued.
2. Issue rules and regulations.

Section D. Exercise of redelegated Authority. Redelegations of authority made under Sections A through B shall not be construed to modify or otherwise affect the outstanding authority redelegated to the Regional and Field Offices.

(Sec. 7(d), Department of Housing and Urban Development Act (42 U.S.C. 3535(d)); Secretary's authority to redelegate published at 36 FR 5003 (1971); 36 FR 5097 (1971); 41 FR 32635 (1976); and 41 FR 24755 (1976))

Issued at Washington, D.C., September 4, 1980.

Clyde McHenry,

Deputy Assistant Secretary for Housing, Federal Housing Commissioner.

[FR Doc. 80-2613[illegible] Filed 9-11-80; 8:45 am]

BILLING CODE 4210-01-M

Federal Register

Friday
September 12, 1980

Part VII

Equal Employment Opportunity Commission

Layoffs and Equal Employment Opportunity

EQUAL EMPLOYMENT OPPORTUNITY COMMISSION

Layoffs and Equal Employment Opportunity

The Equal Employment Opportunity Commission ("EEOC", "the Commission") enforces, among other statutes, Title VII of the Civil Rights Act of 1964, ("Title VII", "the Act") which makes it illegal to discriminate in employment on the basis of race, color, religion, sex, or national origin, and the Age Discrimination in Employment Act of 1967 ("ADEA") which makes it illegal to discriminate in employment on the basis of age.

Congress enacted Title VII to improve the economic and social conditions for minorities and women by providing equal opportunities in the workplace. As a result of this legislation, in the late 1960's and early 1970's, many new employment opportunities opened up to minorities and women in areas where they had been previously denied access.

As many minorities and women have only recently been hired, many of them have not yet had time to accrue seniority sufficient to withstand layoffs. In recessionary periods, such as the current one, they are therefore usually the first to be laid off when an employer finds it necessary to reduce its labor needs. The Commission is greatly concerned that because such layoffs usually have an adverse impact on minorities and women, the routine use of layoffs on a last-hired, first-fired basis, is beginning to eradicate many recent affirmative gains made in the workplace. The Commission is, therefore, interested in investigating alternative approaches to layoffs which would satisfy the employer's reduced labor needs with a minimum of adverse impact on minorities and women. In this regard, the Commission is seeking information from the widest range of people and organizations who are affected by layoffs.

The Commission, which has only assumed jurisdiction over the Age Discrimination in Employment Act in the past year, is also concerned that layoffs by employers may be directed against older workers in particular. This trend is well documented by complaints received from charging parties and cases brought in courts both recently and during previous periods of recession. The Commission is therefore seeking information from older workers, their organizations and others familiar with this problem as well as from employers who have developed sensitivity and mechanisms to avoid discriminatory layoffs of older workers.

In *Griggs* v. *Duke Power Co.*, 401 U.S. 424 (1971), the Supreme Court held that netural employment practices are discriminatory where they have an adverse impact on minorities and women and cannot be justified by business necessity. The Court of Appeals in *Robinson* v. *Lorillard*, 444 F. 2d 791 (4th Cir. 1971), held that in order to establish a business necessity for using an employment practice which has such an adverse impact, the employer must demonstrate that there are no available alternative which would accomplish the employer's business purposes with a lesser adverse impact on minorities or women.

Section 703(h) provides that ". . . it shall not be an unlawful employment practice for an employer to apply different standards of compensation, or different terms, conditions, or privileges of employment pursuant to a bona fide seniority . . . system. . . ." The Supreme in *International Brotherhood of Teamsters* v. *U.S.*, *431* U.S. 324 (1977), while recognizing that but for § 703(h) employment practices which freeze the status quo of pre-Title VII discriminatory employment practices violate Title VII, held that the Congressional intent in enacting § 703(h) was to protect bona fide seniority systems. Nonetheless, under *Teamsters*, a seniority system is not bona fide if there is a demonstration that there was a discriminatory intent in the genesis or maintenance of the system.

However, even where a particular layoff may not be violative of Title VII, an employer may find itself vulnerable to private litigation or enforcement action by the EEOC or other governmental agencies, such as the Office of Federal Contract Compliance Programs, at a later date when the employer is in a new hiring phase. The employer may then be confronted with a situation where it has to institute or reinstitute affirmative action plans because its earlier efforts to correct past discrimination were largely nullified by intervening layoffs.

There are very substantial incentives which should prompt employers to consider alternatives to layoffs. For example, as noted above, by not routinely resorting to layoffs, an employer may be able to avoid potential liability under Title VII as well as Executive Order 11246. Additionally, as the economy has become increasingly dependent on technology, the cost of training new employees has become a much greater part of the employers' investment, as compared to prior periods when the economy was dominated by unskilled and semi-skilled manufacturing jobs and workers. When an employer lays off a worker today the employer often loses the considerable investment that an experienced and trained workforce represents. Therefore, in today's economy, it is to the employer's advantage to explore alternative means of reducing labor costs which to the greatest extent possible avoid laying off workers.

There are substantial incentives for labor organizations too. Some alternative approaches would result in most workers, not only the minority and female workers, keeping their jobs, and thus affording protection against layoffs to all union members generally. For example, if worksharing were the selected alternative, greater job security would also be afforded to the less senior white workers who might otherwise be subject to being laid off. Furthermore, any approach that would keep most of its members employed, would also provide the union with the strength that an active dues paying membership provides.

As the Commission has stated in a resolution adopted on April 1, 1980, in exercising its discretionary enforcement authority, "the Commission shall recognize the 'good faith' efforts of unions and employers to eliminate discriminatory employment practices, whether undertake in cooperation with each other or unilaterally . . ." 65 Daily Labor Report at D-2 (4/2/80).

Congress in enacting Title VII intended not only to prohibit employment discrimination, but also to encourage employers, labor organizations, and others, to voluntarily modify employment practices which constitute barriers to equal employment opportunity for minorities and women. Such voluntary action is not to be necessary by the standard of whether it would have been required had there been litigation, for this standard would undermine the legislative purpose of first encouraging voluntary action without litigation. As the Supreme Court stated in *United Steelworkers of America, AFL-CIO* v. *Weber*, 443 U.S. 193 (1979), where an employer's—

> plan was adopted voluntarily, we are not concerned with what Title VII requires or with what a court might order to remedy a past proven violation of the Act. The only question before us is the narrow statutory issue of whether Title VII *forbids* private employers and unions from voluntarily agreeing upon bona fide . . . [measures] designed to break down old patterns of . . . segregation and hierarchy. [At pp. 200 and 208].

The Court concluded that such voluntary measures are permissible under Title VII.

The Commission therefore strongly urges employers, labor organizations and other persons affected by Title VII to make serious efforts to find alternative methods of reducing the labor costs which do not have a disproportionately adverse impact on minorities and women. If it is absolutely necessary to resort to a layoff, methods should be explored to effectuate the layoff according to plantwide seniority as opposed to departmental seniority—the former method usually has a lesser adverse impact on minorities and women. However, whenever layoffs are not required, employers should look to other methods of reducing labor cost that retain the greatest number of workers, especially newly hired or promoted minorities and women.

Worksharing, usually through a reduced work week, is an example of such an alternative to layoffs which has been recognized by many employers and unions, with almost one-third of union contracts providing for this option. California law now allows unemployment insurance to be used to pay for unemployed days as an alternative to traditional payments for total unemployment. Employers and unions should undertake to achieve this option through their own state legislatures in order to make worksharing a more attractive method for reducing labor costs, thereby benefiting all workers and reducing the adverse impact on minorities and women in particular. The governors and state legislators of the fifty states are urged to effect the minor change in state unemployment compensation laws that would allow unemployment insurance to be used to subsidize shortened work weeks as a measure to reduce unemployment in their states.

The Commission is interested in receiving information and suggestions as to types of alternative approaches that are now in use or may be feasible. The Commission is particularly interested in receiving such information from employers, labor organizations, and the affected individuals, including older workers, or groups. Pending further development of alternative approaches, the Commission will continue its vigorous enforcement of Title VII as to employment practices that have an adverse impact on minorities and women; and will very closely and strictly analyze and claims that such employment practices are protected under section 703(h) of Title VII. The Commission will similarly vigorously enforce the ADEA wherever there is evidence of discriminatory layoffs of workers protected under that statute.

DATE: Comments must be received on or before December 11, 1980.

ADDRESS: Address all comments to: Executive Secretariat, Equal Employment Opportunity Commission, 2401 E Street, NW, Washington, D.C. 20506.

FOR FURTHER INFORMATION CONTACT: Karen Danart, Acting Director, or Raj K. Gupta, Supervisory Attorney, Office of Policy Implementation, Room 4002, E Street, NW, Washington, D.C. 20506; telephone (202) 634-7060.

Signed at Washington, D.C., this 9th day of September 1980.

For the Commission.

Eleanor Holmes Norton,

Chair, Equal Employment Opportunity Commission.

[FR Doc. 80-28193 Filed 9-11-80; 8:45 am]

BILLING CODE 6570-06-M

federal register

Friday
September 12, 1980

Part VIII

Department of Housing and Urban Development

Office of Assistant Secretary for Housing—Federal Housing Commissioner

Low-Income Public Housing Development; Processing Procedures

DEPARTMENT OF HOUSING AND URBAN DEVELOPMENT

Office of Assistant Secretary for Housing—Federal Housing Commissioner

24 CFR Part 841

[Docket No. R-80-690]

Low-Income Public Housing Development; Processing Procedures

AGENCY: Office of the Assistant Secretary for Housing—Federal Housing Commissioner, HUD.

ACTION: Final rule.

SUMMARY: This rule revises the requirements for the development of low-income public housing by simplifying and streamlining the current processing procedures. The revisions are intended to achieve savings in both time and cost by speeding-up the process and eliminating processing delays.

EFFECTIVE DATE: October 1, 1980.

FOR FURTHER INFORMATION CONTACT: Raymond W. Hamilton, Director, Public Housing Development Division, Office of Public Housing, Office of the Deputy Assistant Secretary for Public Housing and Indian Programs, Department of Housing and Urban Development, Washington, D.C 20410 (202-755-5846). This is not a toll-free number.

SUPPLEMENTARY INFORMATION: The public housing development regulation (24 CFR 841) was codified for the first time in February 1977. In August 1979, a complete revision was published as an interim rule in the Federal Register at 44 FR 46996 to be effective November 7, 1979. Interested parties had until October 9, 1979, to submit comments on the interim rule. Written comments were received from 87 organizations and individuals. As a result of these comments the Department, on November 2, 1979, deferred the effective date of the interim rule until further notice. The final rule incorporates changes necessitated by the comments on the interim rule.

A. Summary of Major Issues

The interim rule, among other things, sought to expedite the development process by combining elements of the current Public Housing Agency (PHA) application and development program into a single PHA proposal comprising evidence of site control or availability and other data currently submitted at the development program stage. Project funding was proposed to be based on selection of competing proposals within an allocation area, hence initial applications, program reservations, and preliminary loans were eliminated. Comments were solicited particularly on these major issues. Based on the great number of comments objecting to a requirement for a complete initial submission, without a preliminary loan and with no assurance of selection, the Department in this final rule is implementing a two-track system which is explained under paragraph B, below.

B. Discussion of Comments and Revisions

The following is a summary of the concerns raised by the public and an explanation of how the final rule addresses them.

1. *Need for "front-end" funding.* Seventy-two commentors stated that eliminating applications, program reservations, and preliminary loans would preclude participation in the program by all but the largest and most experienced PHAs. They indicated that a comprehensive proposal submission would require a greater expenditure of time and money than is needed under the current system and that many PHAs lacked funds to meet these expenses.

The Department believes that large and experienced PHAs have access to other sources of funds and are capable of submitting proposals without the need for preliminary loans. The Department also recognizes that some PHAs may require an advance of funds for proposal preparation. The Department expects that Community Development Block Grant (CDBG) funds will be used to assist in the preparation of public housing proposals. In order to accommodate the needs of diverse PHAs, the final rule retains the expanded proposal concept of the interim rule to implement the Department's goal of expediting processing wherever possible. However, small PHAs which lack front-end funds will be given an opportunity to execute an ACC and request funds to prepare proposals. (Note: the program reservation, preliminary loan, and preliminary loan contract will no longer be used under the procedures identified in the final rule).

2. *Funding selection system.* The interim rule would have established a funding selection system based on rating and ranking of complete proposals to be maintained in a field office proposal pipeline. Under that concept, the highest rated proposals within each allocation area would have been selected for development when funds became available. Thirty commentors noted that proposals could remain in the pipeline for extended periods, while evidence of site control would "stale" quickly, rendering the proposals nonfunctional. They also pointed out that with no assurances of selection, architects, developers, and others involved in proposal preparation would be reluctant to participate on a speculative basis or, if willing to participate, might not put forth their best efforts to produce top-quality proposals.

The final rule establishes two different procedures for submitting proposals under the public housing program. These procedures complement the fund allocation procedures (24 CFR 891) and provide a method to "target" all public housing funds to specific PHAs on an equitable basis.

Central cities of a standard metropolitan statistical area or selected CDBG entitlement recipients, whenever feasible, are established as separate allocation areas by the field office. After consultation with representatives of the units of general local government in such cities, public housing funds are allocated or "set-aside" for use by the PHAs having jurisdiction in the cities established as a separate allocation area. After receipt of advice of a specific allocation of funds, the PHA in such an allocation area will have assurance of funding from HUD because public housing funds will have been "targeted." Accordingly, the PHA will be required to submit a complete proposal for consideration by the field office as was proposed in the interim rule.

There is not a similar method to "target" funds to PHAs located in allocation areas which encompass more than one PHA and where competition among PHAs is made necessary because of the limited availability of public housing funds. The final rule permits a PHA located in such an allocation area to submit an application at any time and to follow-up with a complete proposal only after funds have been allocated and the field office invites the PHA to submit a proposal. The application provides competing PHAs a low-cost opportunity to advise the field office of their interest in public housing to meet local housing needs and to identify the relationship of the proposed housing to other local activities (e.g., CDBG, neighborhood revitalization, relocation). Approvable applications will be assigned a general priority rating and will be retained in an application pipeline by the field office. The pipeline applications will be considered when the field office develops its fiscal year allocation plan and, when public housing funds become available, the PHAs with high priority applications will be invited to submit proposals. It should be noted that the field office evaluation of each application will be

subject to a preliminary review for compatibility with any applicable three-year goals identified in housing assistance plans (HAPs) and areawide housing opportunity plans (AHOPs). This preliminary review for compatibility does not substitute for the Section 213 review pursuant to 24 CFR 891 which is done at the proposal stage during technical processing (Section 841.405) on the basis of any HAPs or AHOPs in effect at that time. In this way public housing funds will be "targeted" to those PHAs that have high priority applications and thereby such PHAs will be given the necessary assurances to permit preparation of a quality proposal.

3. *Completeness of proposals.* The provision in the interim rule that sites be identified and site control documents or evidence of site availability be included in a proposal competing for selection and funding was a source of concern to thirty-eight commentors. They argued that "evidence of availability" had no meaning in a volatile housing market; that many PHAs lacked the financial capability to obtain speculative long-term options; and that sites could be lost prior to proposal selection, which would necessitate proposal withdrawal, repreparation, and resubmission. They indicated that the proposal requirements were too stringent for the risks involved at the early stage.

The Department believes that these concerns are met with the two-track system. First, competition among PHAs at the proposal stage is eliminated, since proposals will be invited either on the basis of selected pipeline applications or on the basis of a specific allocation for the central city allocation area within which the PHA may operate. PHAs in either case are assured of funding provided that the proposal is sufficient, meets all requirements, and is received in a timely manner. Second, no element of the proposal will "stale" by being held indefinitely in the pipeline and the risks assumed by PHAs, architects or developers will be greatly reduced.

The final rule eliminates competition at the proposal stage and targets funds to PHAs. With these changes, the requirement that proposals include site identification and control regardless of the development method should be acceptable. Moreover, as provided in Sections 841.402 and 841.403, the field office may authorize execution of the ACC to provide front-end funding to prepare proposals.

4. *Field Office preparation of PHA packets.* Fifteen commentors objected to HUD preparation of the development packet which would instruct PHAs, developers and other interested parties as to program requirements prior to proposal submission. They pointed out that local circumstances might require the PHA to revise, withdraw or prepare a supplement to the packet which would lead to confusion. They believed that HUD preparation of the packet would lessen the concept of local control over development.

It was not HUD's intent to reduce the concept of local control but rather to standardize the Federal statutory and regulatory requirements for the public housing program in a packet. Although dropped from the final rule, a standard turnkey developer's packet will be made available for PHA use pursuant to the implementing Handbook.

5. *PHA contracts.* Fourteen commentors noted that the prohibition against contracting before ACC execution would preclude the PHA from acquiring architectural, engineering or legal services needed to prepare proposals. They also indicated that the requirement for HUD to approve each contract without financial obligation for its payment was unduly restrictive and a hindrance to PHAs.

HUD approval of contracts is an existing requirement of the current regulation and ACC and is retained in the final rule. The Department must be assured that all contracts which provide for payment or reimbursement with Federal funds will be within approvable amounts and in compliance with the ACC.

6. *Administrative plans.* The interim rule would have required that the proposal include an administrative plan demonstrating the PHA's capability to develop and operate the proposed project. Thirteen commentors objected that established PHAs should not have to demonstrate their administrative capabilities with each new project and, barring changes, such information should be required from new PHAs only.

The Department agrees that PHAs should not have to submit duplicative administrative plans. Established PHAs will only be required to provide new or updated information on administrative capability.

7. *Development methods.* A total of forty-four comments were received concerning the three development methods. These ranged from general misunderstandings on how developers or contractors were to be selected to technical objections on the need for contractors to provide 100 percent performance and payment bonds.

The Department has no intention of contravening State laws relating to either competitive bidding or turnkey developer selection. The invitation to PHAs to submit proposals will provide a deadline for submission that is sufficient to allow the PHAs time to prepare a turnkey developer's packet, advertise, and select the best turnkey submission. Under the conventional development method, selection of a contractor will occur following advertisement for competitive bids after proposal approval, ACC execution and construction document approval.

Bidders under the conventional method will normally continue to provide assurance in the form of 100 percent performance and payment bonds to protect the Federal interest. However, where the soundness of firms wishing to do business with PHAs is otherwise established, the final rule permits the field office to approve acceptance of assurance other than 100 percent bonds.

Limiting language on the selection of development methods has been deleted. The PHA will be responsible for identifying the method most suitable for meeting the housing needs of the community for which the project is proposed.

One commentor recommended the possibility of allowing "mixed" proposals utilizing more than one development method so that PHAs would have maximum flexibility, especially when proposing a scattered-site project. Although the idea has merit, it was not accepted because the kinds of submissions and the development costs vary greatly and coordination problems would be time-consuming and cumbersome.

It should also be noted that the turnkey preliminary contract of sale will no longer be used. The preliminary contract of sale was dropped because experience has shown that it is rarely used. Acquisition with rehabilitation is no longer listed as a separate development method. Acquisition with rehabilitation will occur under either the turnkey or conventional development method because the scope of work to be done generally requires capabilities beyond the level of PHA staff expertise and is normally processed in the same manner as new construction projects. Acquisition projects will be limited to existing properties requiring little or no repair work.

One commentor objected to limiting acquisition under scattered-site projects to four units in any dwelling structure and recommended the ceiling be raised to twelve "to meet various regulatory requirements such as Davis-Bacon, relocation, etc." The number of units in a structure does not determine applicability of the Davis-Bacon Act and the Uniform Relocation Assistance and Real Property Acquisition Policies Act

of 1970 to the public housing program. Nevertheless, the Department agrees that the final rule should permit flexibility. The limit of four units per dwelling structure has been deleted from the final rule and is being addressed in the implementing Handbook.

8. *Prototype Costs.* Fourteen comments were related to the effects of prototype costs on development. Most of the comments were either supportive or indicated a misunderstanding of the proposed procedure. However, five commentors expressed dissatisfaction with prototype costs as being either too low or too inflexible.

The Department recognizes that difficulties in processing occur because the prototype costs reflect construction costs at a given time. The final rule provides for a prototype cost limit for specific projects adjusted to reflect actual cost increases, based on a commercial construction cost index, from the date of publication of the prototype costs in the Federal Register to the date of execution of the construction contract or contract of sale. This procedure was devised to permit use of the same base project prototype cost for all processing actions from proposal approval to execution of the construction contract or contract of sale. The Department expects that this revised procedure will permit continuous project processing and alleviate much of the stop and go action which has been characteristic of the current procedure.

9. *Financial feasibility test.* Eight commentors objected to the test for financial feasibility proposed in the interim rule as being a hindrance and unworkable because the Performance Funding System (PFS) needs to be revised. The Department is studying the current PFS but, until the study is completed no changes can be made. However, the financial feasibility test has been revised to clarify that consideration under either a consolidated ACC or a separate ACC is permitted. Also, when a separate ACC is used, the allowable expense level to be used must be that of a comparable PHA. This test is similar to that which is now in use but, under the final rule the test will only be required at proposal submission.

10. *Other comments.* Fifteen comments offered alternatives to the interim rule. These comments were in the spirit of the streamlining and simplification effort and served as the basis for some of the restructuring under the final rule. Some comments were made moot by the major changes already discussed and other comments formed the basis for language and organizational clarifications in the final rule. Some comments concerned details that are inappropriate for a regulation but which will be reflected in the implementing Handbook.

Others commented on subjects more appropriately addressed in other regulations. For example, 24 CFR 891 sets forth criteria for allocating funds and reviewing applications for housing assistance; therefore, these subjects are not appropriate for this final rule. The requirements for tenant selection are stated at 24 CFR 860 and none of these criteria are repeated.

It should be noted that when the final rule becomes effective, use of the current Notification of Housing Assistance Availability (NOHAA) will cease. PHAs should consider preparing applications before the effective date of this final rule so that such applications may be considered by the field office when allocating funds for Fiscal Year 1981 pursuant to 24 CFR 891.

All comments were useful and the Department appreciates the time and interest shown.

C. Site and Neighborhood Standards

The interim rule adopted the Section 8 site and neighborhood standards in lieu of the Project Selection Criteria. The final rule retains the Section 8 standards for purposes of uniformity. Conforming amendments to the Project Selection Criteria are being published at 24 CFR 200, Subpart N, to delete all references and applicability to the public housing program effective October 1, 1980.

D. Displacement

The acquisition of a site or property from an owner by a turnkey developer is a private transaction and not subject to the Uniform Relocation Assistance and Real Property Acquisition Policies Act (Uniform Act). Section 841.207(d) provides that residential renter occupants who are required to move for purposes of developing a turnkey project are entitled to relocation assistance. The type of relocation assistance to be provided is similar to that which is administratively required for other HUD programs that are not covered by the Uniform Act.

E. Applicability

This final rule will be applicable to all proposals received in response to a field office invitation issued after the effective date of this rule. Other projects for which a program reservation was issued prior to the effective date of this final rule will continue to be processed in accordance with the requirements established under the February 1977 regulation at 24 CFR 841. Separate instructions for transferring projects, currently in processing, to the new procedures established in this final rule will be issued by this Department at a later date.

A finding of inapplicability respecting the National Environmental Policy Act of 1969 has been made in accordance with HUD procedures. A copy of this finding will be available for public inspection during regular business hours at the Office of the Rules Docket Clerk, Office of General Counsel, Room 5218, Department of Housing and Urban Development, 451—7th Street, S.W., Washington, D.C. 20410.

The legislative review provisions of Section 7(o) of the Department of HUD Act, 42 U.S.C. 3535(o) have been met.

This rule is listed as item number H-1-79 (Revision of Public Housing Development Regulations) in the Department's semiannual agenda of significant rules, published pursuant to Executive Order 12044.

Accordingly, 24 CFR 841 is revised in its entirety, including the title of the Part and Subparts, to read as follows:

PART 841—PUBLIC HOUSING DEVELOPMENT

Subpart A—General

Sec.
841.101 Purpose and scope.
841.102 Development methods.
841.103 Definitions.

Subpart B—PHA Eligibility and Program Requirements

841.201 PHA eligibility.
841.202 Site and neighborhood standards.
841.203 Design and construction standards.
841.204 Prototype costs.
841.205 PHA contracts.
841.206 Properties assisted under the Act.
841.207 Uniform Act.
841.208 Other Federal requirements.

Subpart C—Application

841.301 General.
841.302 Content.
841.303 Pipeline.

Subpart D—Proposal

841.401 Fund allocation.
841.402 PHAs inside central city allocation areas.
841.403 PHAs outside central city allocation areas.
841.404 Proposal content.
841.405 Technical processing and approval.
841.406 Maximum development cost and advances.

Subpart E—Project Development

841.501 Site and property acquisition.
841.502 Project design and execution of contracts.
841.503 Construction requirements.
841.504 Acceptance of work and contract settlement.
841.505 Completion of development.

Authority: Sec. 7(d) Department of Housing and Urban Development Act, 42 U.S.C. 3535(d); U.S. Housing Act of 1937, 42 U.S.C. 1437.

Subpart A—General

§ 841.101 Purpose and scope.

(a) *Purpose.* The United States Housing Act of 1937 (Act) authorizes HUD to provide technical assistance to public housing agencies (PHAs) for the development and operation of low-income housing projects and financial assistance in the form of loans and annual contributions under Sections 4, 5 and 9 of the Act. This Part is the regulation under which low-income housing (excluding Indian housing), herein called public housing, is developed. The regulations for development of other types of housing assisted under the Act, including Section 8 and Indian housing, are contained in other Parts of 24 CFR Chapter VIII. The requirements for the administration of a PHA and for the operation and management of public housing projects also are stated in 24 CFR Chapter VIII and in the annual contributions contract (ACC). Some of the regulations in 24 CFR Chapter VIII that relate to the public housing program are:

(1) Part 812—Definition of family and single person occupancy.
(2) Part 860—Income limits, tenant selection, and rents.
(3) Part 861—Rent increases.
(4) Part 865—Project management.
(5) Part 866—Lease and grievance procedure.
(6) Part 867—Personnel policies and compensation.
(7) Part 868—Modernization.
(8) Part 869—Demolition and disposition.
(9) Part 890—Operating subsidy.
(10) Part 891—Application review and fund allocations.

(b) *Scope.* This regulation establishes two different procedures to be followed for inviting proposals for public housing projects from PHAs based on whether the PHA is located inside or outside a central city allocation area.

(1) A PHA located inside a central city allocation area will not be required to submit an application. Such PHAs will be invited to submit proposals (Subpart D) when funds are allocated pursuant to 24 CFR 891.

(2) A PHA located outside a central city allocation area will be required to submit an application (Subpart C) which provides sufficient data for the field office to evaluate the community's housing needs and priorities relative to other communities within the field office jurisdiction. The applications will be rated by the field office and placed in an application pipeline. Such PHAs, based on the priority rating of their pipeline applications, will be invited to submit proposals (Subpart D) when funds are allocated pursuant to 24 CFR 891.

§ 841.102 Development methods.

A PHA may use one of three different methods to develop a project. The following are brief summaries of these development methods.

(a) *Conventional.* The conventional method may be used for either new construction or rehabilitation. The PHA is responsible for selecting a site or property and designing the project. After field office approval of a PHA proposal which identifies a site or property, the ACC is executed, site engineering studies or property inspections are performed, and the PHA acquires the site or property. The PHA contracts with an architect to prepare the project design and construction documents. Following field office approval of these documents, the PHA advertises for competitive bids to build or rehabilitate the project on the PHA-owned site and, after field office approval, awards a construction contract to the lowest responsible bidder. The contractor is required to furnish a 100 percent performance and payment bond or other assurances approved by the field office. The contractor receives progress payments from the PHA during construction or rehabilitation and a final payment upon completion of the project in accordance with the construction contract.

(b) *Turnkey.* The turnkey method may be used for either new construction or rehabilitation. The PHA advertises for and selects the turnkey developer who submits the best housing package for a site or property owned or to be purchased by the developer. The PHA then submits a proposal, incorporating the turnkey developer's submission, to the field office for approval. After field office approval of the PHA proposal, the ACC is executed and the developer prepares the design and construction documents. Following PHA and field office approval of these documents, the developer and PHA enter into a contract of sale which is approved by the field office. The developer is responsible for providing a completed housing project, which includes obtaining construction financing. Upon completion of project construction or rehabilitation in accordance with the contract of sale, the PHA purchases the project from the developer.

(c) *Acquisition.* The acquisition method may be used only to purchase existing properties that require little or no repair work (not to exceed in the aggregate 10 percent of the project total development cost). The PHA identifies the specific properties and after an appraisal and field office approval, the ACC is executed, and the PHA acquires the properties. Repair work is completed after acquisition, either by the PHA contracting to have the work done or by having the staff of the PHA perform the work.

§ 841.103 Definitions.

Act. The United States Housing Act of 1937 (42 U.S.C. 1437).

Allocation Area. A municipality, county, or group of contiguous municipalities or counties identified by the field office or in an approved areawide housing opportunity plan for the purpose of allocating housing assistance to support economically feasible housing projects (24 CFR 891).

Annual Contributions Contract (ACC). A contract (in the form prescribed by HUD) for loans and annual contributions whereby HUD agrees to provide financial assistance and the PHA agrees to comply with HUD requirements for the development and operation of a public housing project.

Application. A preliminary submission pursuant to Subpart C by a PHA located outside a central city allocation area which addresses local housing need and development priority. The application is used by the field office to determine the extent that public housing funds will be allocated to specific allocation areas and which of several PHAs, competing for contract authority within an allocation area, should be given the first opportunity to submit a proposal for developing a project.

Central City Allocation Area. The central city of a standard metropolitan statistical area, or a formula entitlement community development block grant recipient, either of which is established as a separate allocation area by the field office pursuant to 24 CFR 891.

Community. A municipality or other general purpose political subdivision below the county level.

Construction Contract. A contract (in the form prescribed by HUD) between the PHA and a contractor to build or rehabilitate a project using the conventional development method.

Construction Documents. The working drawings and construction specifications and the rehabilitation work write-ups, where applicable, that set forth the work to be done under a construction contract or contract of sale.

Contract of Sale. A contract (in the form prescribed by HUD) between the

PHA and a developer whereby the PHA agrees to purchase a completed project after construction or rehabilitation by a developer using the turnkey development method.

Cooperation Agreement. An agreement between a PHA and the applicable local governing body or bodies which assures exemption from real and personal property taxes, provides for local support and services for the development and operation of a public housing project, and provides for PHA payments in lieu of taxes.

Design Documents. The preliminary drawings and specifications and the preliminary rehabilitation work write-ups, where applicable, in sufficient detail to define the extent of construction or rehabilitation and demonstrate compliance with HUD design and construction standards.

Field Office. See HUD.

Housing Assistance Plan. A local housing assistance plan approved by the field office meeting the requirements of the community development block grant regulation (24 CFR 570) whether or not the unit of general local government submitting the plan is a participant in the block grant program.

Household Type. The three household types are (1) elderly and handicapped, (2) family, and (3) large family (24 CFR 891; 24 CFR 812 defines elderly, family and handicapped).

Housing Type. The three housing types are (1) new construction, (2) rehabilitation and (3) existing housing (24 CFR 891).

HUD. The Department of Housing and Urban Development, including the Regional Office and the Area or Service Office (herein called field office) which has been delegated authority to perform functions pertaining to this Part.

Proposal. A detailed PHA submission pursuant to Subpart D of all information, including identification and evidence of site control, necessary for the field office to approve a public housing project.

Public Housing Agency (PHA). Any State, county, municipality, or other governmental entity or public body (or agency or instrumentality thereof) which is authorized to engage in or assist in the development and operation of low-income housing under this Part.

Total Development Cost. The sum of all HUD approved costs for planning, (including proposal preparation), administration, site acquisition, relocation, demolition, construction and equipment, interest and carrying charges, on-site streets and utilities, non-dwelling facilities, a contingency allowance, insurance premiums, off-site facilities, any initial operating deficit, and other costs necessary to develop the project. The total development cost in the proposal when reviewed and approved by the field office becomes the maximum total development cost stated in the ACC. Upon completion of the project, the actual development cost is determined and this becomes the maximum total development cost of the project for purposes of the ACC.

Subpart B—PHA Eligibility and Program Requirements

§ 841.201 PHA eligibility.

(a) *General.* In order to participate in the public housing program, a PHA must be approved as an eligible PHA. The field office will determine eligibility based on a showing that the PHA has the legal authority and local cooperation required by this Part.

(b) *Legal Authority.* The PHA must demonstrate that it has the legal authority to develop, own, and operate a public housing project under the Act.

(c) *Local Cooperation.* The PHA must provide a cooperation agreement between the PHA and the applicable local governing body for the area in which the public housing project is to be located as evidence that the local governing body will provide the local cooperation required by HUD pursuant to the Act. This local cooperation shall include exemption from real and personal property taxes, acceptance of PHA payments in lieu of taxes, and the provision at no cost or at no greater cost by the local governing body of the same public services and facilities normally furnished to others in the community.

§ 841.202 Site and nighborhood standards.

Proposed sites for public housing projects to be newly constructed or rehabilitated must be approved by the field office as meeting the following standards:

(a) The site must be adequate in size, exposure and contour to accommodate the number and type of units proposed, and adequate utilities (e.g., water, sewer, gas and electricity) and streets must be available to service the site.

(b) The site and neighborhood must be suitable from the standpoint of facilitating and furthering full compliance with the applicable provisions of Title VI of the Civil Rights Act of 1964, Title VIII of the Civil Rights Act of 1968, Executive Order 11063, and HUD regulations issued pursuant thereto.

(c) The site for new construction projects must not be located in: (1) An area of minority concentration unless (i) sufficient, comparable opportunities exist for housing for minority families, in the income range to be served by the proposed project, outside areas of minority concentration, or (ii) the project is necessary to meet overriding housing needs which cannot otherwise feasibly be met in that housing market area. An "overriding need" may not serve as the basis for determining that a site is acceptable if the only reason the need cannot otherwise feasibly be met is that discrimination on the basis of race, color, religion, creed, sex, or national origin renders sites outside areas of minority concentration unavailable; or

(2) A racially mixed area if the project will cause a significant increase in the proportion of minority to non-minority residents in the area.

(d) The site must promote greater choice of housing opportunities and avoid undue concentration of assisted persons in areas containing a high proportion of low-income persons.

(e) The site must be free from adverse environmental conditions, natural or manmade, such as instability, flooding, septic tank back-ups, sewage hazards or mudslides; harmful air pollution, smoke or dust; excessive noise vibration, vehicular traffic, rodent or vermin infestation; or fire hazards. The neighborhood must not be one which is seriously detrimental to family life or in which substandard dwellings or other undesirable elements predominate, unless there is actively in progress a concerted program to remedy the undesirable conditions.

(f) The site must comply with any applicable conditions in the local housing assistance plan approved by the field office.

(g) The housing must be accessible to social, recreational, educational, commercial, and health facilities and services, and other municipal facilities and services that are at least equivalent to those typically found in neighborhoods consisting largely of similar unassisted standard housing.

(h) Travel time and cost via public transportation or private automobile, from the neighborhood to places of employment providing a range of jobs for lower-income workers, must not be excessive. (While it is important that elderly housing not be totally isolated from employment opportunities, this requirement need not be adhered to rigidly for such projects.)

(i) The project may not be built on a site that has occupants unless the relocation requirements referred to in Section 841.207 are met.

(j) The project may not be built in an area that has been identified by HUD as having special flood hazards and in which the sale of flood insurance has been made available under the National

Flood Insurance Act of 1968, unless the project is covered by flood insurance as required by the Flood Disaster Protection Act of 1973, and it meets any relevant HUD standards and local requirements.

§ 841.203 Design and construction standards.

Projects shall not be of elaborate or extravagant design or materials, and shall be developed to promote serviceability, efficiency, economy, and stability, and to promote the economic and social well being and advancement of the prospective occupants. Projects must comply with: (a) HUD Minimum Property Standards or, if applicable, the HUD Minimum Design Standards for Rehabilitation for Residential Properties.

(b) HUD requirements pursuant to Section 209 of the Housing and Community Development Act of 1974 for projects for the elderly or handicapped.

(c) Section 6(b) of the Act which includes: (1) The extra durability required for safety and security and economical maintenance of such housing;

(2) The provision of amenities designed to guarantee a safe and healthy family life and neighborhood environment;

(3) The application of good design as an essential component of such housing for safety and security as well as other purposes;

(4) The maintenance of quality in architecture to reflect the standards of the neighborhood and community;

(5) The need for maximizing the conservation of energy for heating, lighting, and other purposes;

(6) The effectiveness of existing cost limits in the area; and

(7) The advice and recommendations of local housing producers.

(d) HUD requirements pertaining to noise abatement and control.

(e) Applicable State and local laws, codes, ordinances, and regulations.

(f) Projects for families with children shall to the maximum extent practicable consist of low-density housing (e.g., non-elevator structures, scattered sites or other types of low-density developments appropriate in the community).

(g) High-rise elevator structures shall not be provided for families with children regardless of density unless the PHA demonstrates and the field office determines that there is no practical alternative. High-rise buildings for the elderly may be used if the PHA demonstrates and the field office determines that such construction is appropriate taking into consideration land costs, the safety and security of the prospective occupants, and the availability of community services.

§ 841.204 Prototype costs.

The prototype costs established by HUD represent the ceiling amounts that may be approved for dwelling construction and equipment for projects involving new construction. Dwelling construction and equipment costs do not include the cost of land, demolition, site improvements, non-dwelling facilities and PHA administrative costs for project development activities.

(a) *Prototype Cost Areas.* The field office shall establish prototype cost areas by determining the boundaries within which trade conditions and economic influences tend to make construction costs substantially the same. A separate prototype cost area may be established if construction costs in a community consistently differ from other communities within the same prototype cost area. A PHA may request a change in the boundaries of a prototype cost area or establishment of a separate area by presenting evidence supporting the difference in construction costs to the field office.

(b) *Unit Prototype Cost.* The field office shall recommend the unit prototype cost for various unit sizes (number of bedrooms) and structure types (i.e., detached and semidetached, row, walkup, elevator) for each prototype cost area. The unit prototype cost represents the current dwelling construction and equipment cost for modest housing that is built in compliance with the Minimum Property Standards, local building codes and requirements, and the additional public housing program standards identified in § 841.203(c). The field office recommendations of unit prototype cost are submitted to the Assistant Secretary for Housing for review and approval. The unit prototype costs for each area shall be published at least annually in the Federal Register. A PHA may request a change in the unit prototype cost by presenting supporting construction cost information to the field office.

(c) *Base Project Prototype Cost.* The field office shall establish the base project prototype cost at the time it invites proposals from PHAs located outside central city allocation areas, or at the time it approves a proposal submitted by a PHA located inside a central city allocation area. The base project prototype cost shall be computed by multiplying the then current applicable unit prototype cost by the number of units for that unit size and structure type and then adding the amounts for all units in the proposed project.

(d) *Prototype Cost Adjustment Factor.* The field office, using a commercial construction cost index specified by the Assistant Secretary for Housing, shall determine the percentage of actual changes (increases or decreases) in construction costs from the effective date of the unit prototype cost to the execution date of the construction contract or the contract of sale. The resulting percentage is the prototype cost adjustment factor.

(e) *Project Prototype Cost Limit.* The field office shall determine the project prototype cost limit by multiplying the base project prototype cost by the prototype cost adjustment factor. The amount approvable by the field office for dwelling construction and equipment may not exceed the project prototype cost limit, except that the limit may be exceeded (in accordance with Section 6(b) of the Act) by up to ten (10) percent if there is an increase in dwelling construction and equipment costs for the project attributable to: (1) Changes in the HUD Minimum Property Standards, the public housing program standards identified in Section 841.203, or local building requirements which were not considered when the applicable unit prototype cost was developed;

(2) The development of low-density housing on scattered sites;

(3) Construction, design or material changes approved by the field office; or

(4) Other specific causes approved by the Assistant Secretary for Housing.

§ 841.205 PHA contracts.

(a) *ACC Requirements.* In order to be considered as eligible project expenses, all development related contracts entered into by the PHA shall provide for compliance with the provisions of the ACC.

(b) *Contract Forms.* All development related contracts shall be in the form prescribed by the field office.

(c) *Field Office Approval.* The PHA, unless otherwise authorized, shall obtain the written approval of the field office prior to executing, or making payments pursuant to, any development related contracts. This includes but is not limited to contracts for project design, site and property acquisition, construction contracts, contracts of sale, and contracts for construction inspections.

§ 841.206 Properties assisted under the act.

Proposals involving properties already assisted under the Act, or which received assistance within one year of the date the application or proposal is

submitted to the field office, may not be approved without the prior written approval of the Assistant Secretary for Housing.

§ 841.207 Uniform Act.

(a) *Applicability.* The Uniform Relocation Assistance and Real Property Acquisition Policies Act of 1970 (42 U.S.C. 4601) and HUD implementing regulation at 24 CFR 42 apply to the acquisition of real property by a PHA for a project assisted under this Part and to any displacement that results from such acquisition.

(b) *Exceptions.* The provisions of the Uniform Act do not apply to the following:

(1) PHA acquisition of sites or properties that are offered for sale by owners in response to a PHA public invitation or solicitation for offers or that are voluntarily offered for sale by the owner, except that Title II shall apply to any renter occupants of such sites or properties; or

(2) Acquisition of any property by a turnkey developer [but see paragraph (d) of this Section].

(c) *Acquisition Subject to the Uniform Act.* For purposes of 24 CFR 42, the following shall apply to displacements that are not exempt under paragraph (b) of this Section: (1) The date of "initiation of negotiations" shall be the date the PHA executes the offer to purchase the property from the owner; and

(2) The PHA shall issue "notices of displacement" or "notices of right to continue in occupancy" within thirty (30) calendar days, or such later date approved by the field office, of the date of "initiation of negotiations". The PHA may only issue "notices of right to continue in occupancy" to those occupants who meet the continued occupancy requirements of 24 CFR 860.

(d) *Displacement Resulting from Turnkey Development.* (1) Residential renter occupants who were in occupancy on the date the proposal was approved by the field office and are required to move (other than for cause) for purposes of developing the turnkey project, shall be entitled to relocation assistance. Each eligible occupant shall be provided with the following as prescribed by HUD: (i) appropriate advisory services to minimize hardships in adjusting to temporary or permanent relocation;

(ii) permanent relocation to a suitable replacement dwelling unit or temporary relocation followed by permanent relocation when a suitable replacement dwelling unit becomes available;

(iii) reimbursement for reasonable moving and related expenses; and

(iv) advance written notice, of at least thirty (30) days, indicating the date by which the occupant is expected to move.

(2) Residential renter occupants who move into a property after field office approval of the proposal shall not be eligible for relocation assistance if, prior to occupancy, they are given written notification of their potential displacement because the property has been approved for development as public housing. The turnkey developer shall be responsible for assuring that prior notification is given to any such occupant.

(3) If a residential renter occupant moves into a property after field office approval of the proposal and is not given prior written notice and is thereafter required to move (other than for cause), the turnkey developer shall be responsible for reimbursing such occupant for reasonable moving and related expenses without cost to the project or the PHA. In addition, (i) any such occupant who meets the Section 8 eligibility requirements shall be provided advisory services and permanent relocation in a HUD assisted housing unit in accordance with the priority criteria for displacees; or (ii) any such occupant who does not meet the Section 8 eligibility requirements shall be provided advisory services and assistance in finding a suitable replacement dwelling unit.

§ 841.208 Other Federal requirements.

(a) *Equal Opportunity Requirements.* Participation in this program requires compliance with Title VI of the Civil Rights Acts of 1964 (42 U.S.C. 2000d), Title VIII of the Civil Rights Act of 1968 (42 U.S.C. 3601), Executive Orders 11063, 11246, and 11375, Section 3 of the Housing and Urban Development Act of 1968 (12 U.S.C. 1701u), and all related rules, regulations and requirements.

(b) *Environmental Requirements.* Participation in this program requires compliance with the National Environmental Policy Act of 1969 (42 U.S.C. 4321), the Clean Air Act (42 U.S.C. 1857), the Federal Water Pollution Control Act (33 U.S.C. 1151), the Flood Disaster Protection Act of 1973 (42 U.S.C. 4001), the National Historic Preservation Act of 1966 (P.L. 89-665), the Archeological and Historic Preservation Act of 1974 (P.L. 93-291), Executive Order 11593 relating to the Protection and Enhancement of the Cultural Environment (including the procedures prescribed by the Advisory Council on Historic Preservation at 36 CFR 800), Executive Order 11988 on Floodplain Management, Executive Order 11990 for the Protection of Wetlands, and all related rules, regulations and requirements.

(c) *Rehabilitation Act.* Participation in this program requires compliance with Section 504 of the Rehabilitation Act of 1973 (29 U.S.C. 794), relating to nondiscrimination against the handicapped, Executive Order 11914, and all related rules, regulations and requirements.

(d) *Prevailing Wages.* Participation in this program requires that not less than the wages prevailing in the locality, as determined by the Secretary of Labor pursuant to the Davis-Bacon Act (40 U.S.C. 276) shall be paid to all laborers and mechanics employed in the development of a project. All architects, technical engineers, draftsmen and technicians shall be paid not less than the wages prevailing in the locality as determined or adopted by HUD (42 U.S.C. 1437j).

(e) *Minority Business Enterprise.* Participation in this program requires compliance with Executive Order 11625, Prescribing Arrangements for Developing and Coordinating a National Program for Minority Business Enterprise.

(f) *Age Discrimination.* Participation in this program requires compliance with the Age Discrimination Act of 1975, and all related rules, regulations, and requirements.

Subpart C—Application

§ 841.301 General.

(a) *Applicability.* Applications under this Subpart may be filed only by PHAs located outside a central city allocation area. Such a PHA may submit one or more applications for a public housing project or projects at any time.

(b) *Purpose.* The application gives a PHA which must compete with other PHAs in the same allocation area an opportunity to advise the field office of the extent to which the application would address local housing needs, of the relationship of the proposed public housing project to other local development activities, and of any factors entitling the application to a priority rating. Applications with a high priority rating will be retained in the field office pipeline and, when funds become available to the field office, PHA with pipeline applications will be invited to submit proposals pursuant to Subpart D. In this way, a PHA will not have to make front-end expenditures to prepare proposals and option sites until the PHA has a reasonable assurance of obtaining funding for a project.

(c) *Revisions.* Each PHA with an application being held in the field office pipeline pursuant to Section 841.303,

during the month of July shall notify the field office in writing that the PHA has reviewed the contents of its application and determined that no changes are required or, if applicable, the PHA shall submit a revised application.

§ 841.302 Content.

(a) *General.* Each application shall be for a specific project, and separate applications shall be submitted by housing type, development method, and community for which the project is proposed. If a PHA submits more than one application for a community, the PHA shall assign a priority rating to each application for that community based on the PHA assessment of local housing need and priorities.

(b) *PHA Eligibility.* The application shall include a showing that the PHA has met the eligibility and local cooperation requirements of Section 841.201.

(c) *PHA Administrative Capability.* The application shall include evidence from a new PHA or updated information, if any, that the PHA has the capability to develop the project and operate all of its projects in compliance with the program requirements.

(d) *Tenant Selection Experience.* The application shall include:

(1) A statement of the PHA experience in selecting tenants whose habits or practices may reasonably be expected to have a positive effect on the project or other tenants; and

(2) A statement of the PHA experience in selecting a cross section of tenants with a broad range of incomes and rent paying abilities that is representative of the range of incomes for lower income families in the community.

(e) *Housing Need and Local Priorities.* The application shall include:

(1) A statement of the extent the application would address local housing need in the community for which the project is proposed to meet any applicable three-year HAP goals or, in the absence of a HAP, other housing needs identified in State, regional, or local housing surveys or plans;

(2) Information concerning local housing priorities and relationship of the proposed project to local community development activities.

(f) *Project Description.* The application shall indicate the:

(1) Community for which the housing is proposed;

(2) Development method;

(3) Housing type; and

(4) Number of units by household type, unit size (number of bedrooms) and structure type.

§ 841.303 Pipeline.

(a) *Application Review.* Each application shall be reviewed by the field office for completeness and consistency with the program requirements.

(b) *Application Rating.* Each approval application will be assigned a general priority rating based on housing need and relationship of the proposed project to other local activities. In establishing the priority rating, consideration also shall be given to local priorities identified in the application and the PHA's ability to develop additional public housing.

(c) *Retention in Application Pipeline.* Approvable applications shall be retained in the application pipeline by the field office until sufficient funds become available or until applications with a higher priority rating are received. The number of units in the pipeline applications shall not exceed the number of units that can reasonably be expected to be funded in a three-year period. If the number of units in pipeline applications exceeds this level, only the applications with the highest priority rating shall be retained by the field office.

(d) *Disposition of Applications.* Unapprovable applications and those receiving a rating which places them below the anticipated three-year funding level will be returned to the PHA with an explanation of the reasons for the action.

Subpart D—Proposal

§ 841.401 Fund allocation.

Funds for public housing projects are allocated to each field office and specific allocation areas pursuant to 24 CFR 891, Subpart D. Each field office develops an allocation plan which establishes the amount of public housing funds to be made available for specific allocation areas and announces the estimated number of units, by housing type and household type, that these funds are expected to produce in such allocation areas.

§ 841.402 PHAs inside central city allocation areas.

(a) *Issuance of Invitation.* When public housing funds become available for a central city allocation area, the field office shall send an invitation to the PHA, identifying the amount of public housing funds allocated and inviting the PHA to submit proposals pursuant to this Subpart. Prior to proposal submission, the PHA shall be invited to provide the following information within a specified time: (1) Evidence that the PHA has met the eligibility and local cooperation requirements of Section 841.201;

(2) Evidence of the PHA administrative capability and tenant selection experience pursuant to Sections 841.302(c) and 841.302(d);

(3) Identify, for each proposal the development method and the housing type;

(4) Identify, for each proposal the number of units by household type; unit size (number of bedrooms) and structure type, and the total units;

(5) A schedule for the submission of each proposal (all proposals must be received by the field office prior to June 30 of the fiscal year for which the allocation was made).

(b) *Project Planning Conference.* The field office invitation will advise the PHA that a project planning conference has been scheduled for a specified date to discuss the program requirements and the PHA and field office actions related to project planning and development.

(c) *Front-End Expenditures.* A PHA inside a central city allocation area is expected to provide necessary funding related to the preparation and submission of proposals. Such a PHA may request front-end funding assistance by HUD only for: (1) scattered-site housing involving rehabilitation under the conventional method; or

(2) scattered-site existing housing to be purchased under the acquisition method.

(d) *ACC Preparation and Execution.* The ACC shall be prepared and sent to the PHA upon approval of the proposal. The PHA shall be requested to execute the ACC and return it to the field office for execution. However, if execution of an ACC has been approved to provide front-end funding assistance, the PHA shall be requested to execute the ACC and return it to the field office for execution prior to submission of the proposal.

§ 841.403 PHAs outside central city allocation areas.

(a) *Issuance of invitation.* When funds become available for other than central city allocation areas, the field office shall invite PHAs with high rated applications in the pipeline to submit proposals pursuant to this Subpart. If there are insufficient pipeline applications for a particular housing type or household type, the field office may send letters requesting PHAs to submit additional applications prior to inviting proposals.

(b) *Project Planning Conference.* The field office invitation will advise the PHA that a project planning conference has been scheduled for a specified date

to discuss the program requirements and the PHA and field office actions related to project planning and development and to establish a deadline date for proposal submission.

(c) *Front-End Expenditures.* Except as provided in this paragraph, PHAs outside a central city allocation area are expected to provide necessary funding related to the preparation and submission of proposals. Such a PHA may request front-end funding assistance by HUD only if the PHA is:

(1) A newly established or small PHA proposing to build, rehabilitate, or acquire housing in communities that are not entitlement cities under the community development block grant program;

(2) Proposing to build or rehabilitate scattered-site housing under the conventional method or proposing to purchase scattered-site existing housing under the acquisition method; or

(3) Other specific causes approved by the Assistant Secretary for Housing to permit a PHA, that would otherwise be precluded, to participate in the public housing program without front-end funding assistance by HUD.

(d) *ACC Preparation and Execution.* The ACC shall be prepared on the basis of the PHA application and will be sent to the PHA by the field office. The PHA shall be requested to execute the ACC and return it to the field office with its proposal, so that the field office can execute the ACC when the proposal is approved. However, if execution of an ACC has been approved to provide front-end funding assistance, the PHA shall be requested to execute the ACC and return it to the field office for execution prior to submission of the proposal.

§ 841.404 Proposal content.

Each proposal shall be prepared in the form prescribed by HUD and shall include at least the following: (a) *Project Description.* A description of the housing, including the number of units, schematic drawings of the proposed building and unit plans, outline specifications or rehabilitation work write-ups, and the types and amounts of non-dwelling space to be provided.

(b) *Site Information.* An identification and description of the proposed site, site plan, neighborhood, and evidence of PHA or turnkey developer control of the site for at least sixty (60) days after proposal submission.

(c) *Project Construction Cost Estimate.* For conventional projects, a preliminary project construction cost estimate based on the schematic drawings and outline specifications and current construction costs prevailing in the area. For turnkey projects, the developer's price for the project based on the deadline date specified in the PHA's advertisement for turnkey developers.

(d) *Zoning.* Evidence that construction or rehabilitation is permitted by current zoning ordinances or regulations or evidence to indicate that needed rezoning is likely and will not delay the project.

(e) *Facilities.* A statement addressing the adequacy of existing or proposed facilities and services for the prospective occupants of the project and, if applicable, a statement addressing the minority enrollment and capacity of the school system to absorb the number of school aged children expected to reside in the project.

(f) *Relocation.* Information concerning any displacement of site occupants, including identification of each displacee, the PHA distribution plan for notices, and the anticipated cost and source of funding for relocation benefits.

(g) *Financial Feasibility.* A PHA subject to the performance funding system shall demonstrate the financial feasibility of the project by showing that the estimated operating expenses will not exceed the estimated operating income for the first fiscal year of operation. If expenses are greater than income, the PHA may consider the amount of operating subsidy that would be made available to the project under a separate or consolidated ACC. A PHA that is not subject to the performance funding system shall provide a demonstration of financial feasibility in accordance with the procedures determined by the Assistant Secretary for Housing.

(h) *Utility Analysis.* An analysis of utility costs demonstrating that the best utility combination is being proposed, based on initial installation costs and long term operation and maintenance costs, energy conservation, and evidence that the selected utilities will be available for the proposed project.

(i) *Contracts.* A copy of the proposed contract between the PHA and its design or inspecting architect and, if applicable, the PHA executed ACC.

(j) *Turnkey Projects.* For projects being developed using the turnkey method, a copy of the PHA advertisement and information furnished to developers, the housing package submitted by the PHA selected turnkey developer, and a certification that the PHA selection was based on an objective rating system using such factors as site location, project design, price, and developer experience.

(k) *Acquisition Projects.* For existing housing, a certification by the PHA and owner that the property was not constructed with the intent that it would be sold to the PHA.

(l) *Project Development Schedule.* A copy of the PHA development schedule, including the PHA architect or turnkey developer estimates of the time required to complete each major development stage.

§ 841.405 Technical processing and approval.

(a) *Initial Screening.* The field office shall perform an initial screening to determine that all required documentation has been submitted. The field office shall advise the PHA of any deficiencies in the proposal and that additional information will be accepted if it is received by a specified date.

(b) *Technical Processing.* Upon determining that a proposal is acceptable for technical processing, the field office shall: (1) Send a copy of each proposal subject to A-95 clearance to the appropriate clearinghouse for review pursuant to OMB Circular A-95, inviting a response within thirty-four (34) calendar days from the date of the field office transmittal letter;

(2) Send a notification to the chief executive officer (or designee) of the unit of general local government pursuant to Section 213 of the Housing and Community Development Act of 1974 (42 U.S.C. 1439), inviting a response within thirty (30) calendar days from the date of the field office transmittal letter;

(3) Evaluate the proposal to determine compliance with all program requirements and, if applicable, the comments received from the A-95 clearinghouse and the unit of general local government;

(4) Complete an environmental review in accordance with the requirements of the National Environmental Policy Act of 1969; and

(5) Determine the appraised value of the site or property.

(c) *Proposal Approval.* The field office shall send a notification letter to the PHA stating that the proposal has been approved or disapproved. For approved proposals, the field office letter shall indicate the approved total development cost and the appraised value of the site or property. The ACC will be sent to the PHA for execution or, where the PHA has already executed the ACC, the field office will execute the ACC and send a copy to the PHA.

§ 841.406 Maximum development cost and advances.

(a) *Maximum Total Development Cost.* The total development cost stated in the ACC is the maximum amount authorized for development of a project.

The PHA shall not make any commitments to pay costs in excess of the amount provided for such purposes in the latest development cost budget approved by the field office. The field office shall not approve a development cost budget with a total development cost in excess of the amount specified in the ACC unless additional funds are provided by an amendment to the ACC.

(b) *Development Advances.* Funds shall only be advanced to the PHA after execution of the ACC by the PHA and the field office. Funds shall be advanced pursuant to a PHA requisition approved by the field office.

(1) Advances may be provided to pay for materials and services related to proposal development, such as PHA staff salaries and travel, professional services for selection of sites or preparation of invitations for housing projects under the turnkey method, site options, site engineering studies and site acquisition.

(2) For projects being developed under the turnkey method, advances prior to execution of the contract of sale shall be limited to one percent of the total development cost stated in the executed ACC.

(3) For projects being developed under the conventional or acquisition method, advances prior to recordation of the deed and the declaration of trust for sites or properties shall be limited to one percent of the total development cost stated in the executed ACC. However, after approval of the proposal by the field office, an additional amount may be advanced for site or property acquisition not to exceed the amount approved by the field office for site and property acquisition.

(c) *Termination of Advances.* The field office may terminate advances if the PHA fails to develop the project in accordance with the approved project development schedule. In the event the PHA defaults on its obligations with regard to development of the project, the amount of advances made to the PHA shall be repaid by the PHA from any funds or assets available for such purposes.

(d) *Recapture of Funds.* In the event that the development of a project is terminated by the field office, any unused or uncommitted funds (including repayments) will be recaptured.

Subpart E—Project Development

§ 841.501 Site and property acquisition.

(a) *Applicability.* The provisions of this Section apply to projects being developed under the conventional or acquisition methods.

(b) *Purchase Agreement.* The PHA, upon approval of the proposal, shall exercise its site option and execute a purchase agreement with the owner. The purchase agreement shall reflect any conditions established by the field office such as the appraised value for the site or property or site engineering studies that must be completed to determine whether the site is suitable for development of the project.

(c) *Title.* The field office shall notify the PHA that it is authorized to take title to the site or property. The PHA shall be required to obtain a title insurance policy or other title evidence acceptable to the field office which guarantees that the title is good and marketable. The PHA shall ensure that the deed and declaration of trust in the form prescribed by HUD are promptly recorded.

§ 841.502 Project design and execution of contracts.

(a) *General.* The PHA, unless otherwise authorized by the field office, shall submit interim or preliminary design documents for field office approval prior to preparing and submitting the detailed construction documents. The field office shall review both the design documents and the construction documents for consistency with the proposal, to determine that all HUD design and construction standards have been met, and to ensure that the project development costs are reasonable and are within the applicable cost limitations.

(b) *Conventional Method.* (1) The design documents and the construction documents shall be prepared in accordance with HUD criteria for approval by the field office.

(2) The project total development cost estimates (excluding site or property purchase) shall be adjusted on the basis of a commercial construction cost index to reflect actual changes in construction costs between the date the proposal was submitted and the date the construction documents are approved. An additional adjustment shall be made to reflect anticipated changes in construction costs from the date the construction documents are approved to the scheduled date for execution of the construction contract.

(3) After the field office has approved the construction documents and construction cost estimates, the PHA shall advertise for bids. In order to approve execution of the construction contract, the field office shall determine that the low bid is responsive to the PHA invitation, that the project total development cost does not exceed the field office estimate of replacement cost and that the amount for dwelling construction and equipment does not exceed the project prototype cost limit.

(4) After field office approval, the construction contract shall be executed by the PHA and the contractor and the PHA shall issue a notice to proceed with construction or rehabilitation in accordance with the construction contract and the approved construction documents.

(c) *Turnkey Method.* (1) The design documents and the construction documents shall be prepared in accordance with HUD criteria for approval by the field office.

(2) The developer's price (excluding site or property purchase and interest during construction) shall be adjusted on the basis of a commercial construction cost index to reflect actual changes in construction costs between the deadline date specified in the PHA invitation for project submissions under the turnkey method and the date that the contract of sale is executed. However, such adjustments shall not be made for any time period attributable to developer caused delays.

(3) The developer's amount for interest during construction shall be adjusted to reflect the actual construction loan interest rate prevailing in the area at the time the contract of sale is executed.

(4) In order to approve execution of the contract of sale, the field office shall determine that the developer's price does not exceed the field office estimate of replacement cost and that the amount for dwelling construction and equipment does not exceed the project prototype cost limit.

(5) After field office approval, the contract of sale shall be executed by the PHA and the developer and by the field office to indicate HUD approval. The developer shall then proceed with construction or rehabilitation of the project in accordance with the contract of sale and the approved construction documents.

(d) *Acquisition Method.* The field office shall determine that the PHA estimate of the project total development cost, including the acquisition price and the cost for minor repairs, is reasonable and does not exceed the field office estimate of replacement cost. After field office approval, the PHA shall purchase the property and complete the required repairs in accordance with HUD requirements.

§ 841.503 Construction requirements.

(a) *Economy.* The PHA shall complete development of the project, in accordance with the project

development schedule, at the lowest possible cost, within the total development cost identified in the ACC, and consistent with HUD construction requirements.

(b) *Contract Changes.* The PHA shall not agree to any changes or additions to the work required under the construction contract or contract of sale or as agreed to under the acquisition method, except as authorized by the provisions of these contracts or by the field office.

(c) *Contract Administration.* The PHA shall be responsible for contract administration and shall contract for the services of an architect, or other person licensed under State law, to assist and advise the PHA in contract administration and inspections to assure that the work is done in accordance with HUD requirements. A field office representative will periodically visit the project site to monitor PHA contract administration.

§ 841.504 Acceptance of work and contract settlement.

(a) *Notification of Completion.* The contractor or developer shall notify the PHA in writing when the contract work, including any approved off-site work, will be completed and ready for inspection. No work shall be accepted by the PHA without prior field office approval. The final inspection will be made jointly by representatives of the PHA, the field office and the contractor or developer.

(b) *Acceptance.* If upon inspection, the PHA and the field office determine that the work is complete and satisfactory, except for work that is appropriate for delayed completion, the work shall be accepted. The PHA shall determine any hold-back for items of delayed completion, the amount due and payable for the work that has been accepted including any conditions precedent to payment that are stated in the construction contract or contract of sale. The field office shall review and, if acceptable, approve the PHA determination concerning work to be accepted and the amount to be paid to the contractor or developer. The contractor or developer shall be paid for items of delayed construction only after inspection and acceptance of this work by the PHA and the field office.

(c) *Title.* If the PHA and field office determine that the turnkey developer completed the work in accordance with the contract of sale, the field office shall notify the PHA that it is authorized to take title to the completed project. The PHA shall be required to obtain a title insurance policy or other title evidence acceptable to the field office which guarantees that the title is good and marketable. The PHA shall ensure that the deed and declaration of trust in the form prescribed by HUD are promptly recorded.

(d) *Guarantees and Warranties.* The construction contract or contract of sale shall specify the project guaranty period and amounts to be withheld and shall provide for assignment to the PHA of all manufacturer and supplier warranties required by the construction documents. The PHA shall inspect each dwelling unit and the overall project approximately three months after the beginning of the project guaranty period and three months before its expiration and also as may be necessary to exercise its rights before expiration of any warranties. The PHA shall require repair or replacement, prior to the expiration of the guaranty or warranty periods, of any defective items.

§ 841.505 Completion of development.

(a) *Initial Operating Period.* Total development cost shall include an amount for any net PHA operating deficit incurred during an initial operating period commencing with the date of execution of the ACC and ending on the date established by the field office pursuant to the ACC.

(b) *Actual Development Cost.* When all development has been completed and paid for, but not later than 12 months after the end of the initial operating period unless a longer period is approved by the field office, the PHA shall submit a statement of the actual development cost. The field office shall review the statement and establish the actual development cost of the project which becomes the maximum total development cost for purposes of the ACC.

Authority: Section 7(d) Department of HUD Act, 42 U.S.C. 3535(d); U.S. Housing Act of 1937, 42 U.S.C. 1437.

Issued at Washington, D.C., September 8, 1980.

Clyde McHenry,

Deputy Assistant Secretary for Housing, Federal Housing Commissioner.

[FR Doc. 80-28210 Filed 9-11-80; 8:45 am]

BILLING CODE 4210-01-M

Federal Register

Friday
September 12, 1980

Part IX

Department of Agriculture

Federal Grain Inspection Service

Standards for Barley, Request for Public Comment

DEPARTMENT OF AGRICULTURE

Federal Grain Inspection Service

7 CFR Part 810

Standards for Barley; Request for Public Comment

AGENCY: Federal Grain Inspection Service (FGIS).

ACTION: Request for public comment.

SUMMARY: In compliance with requirements for periodic review of existing regulations, the Federal Grain Inspection Service proposes studying and evaluating the U.S. Standards for Barley to determine their effectiveness and responsiveness to current marketing needs. Views and comments are solicited from interested parties to help in the study and evaluation of the standards for barley and in the development of any recommendations for change.

DATE: Comments must be submitted by November 12, 1980.

ADDRESS: Comments should be submitted in writing, in duplicate, to Director, Issuance and Coordination Staff, Federal Grain Inspection Service, USDA, Room 1127, Auditor's Building, 1400 Independence Avenue, SW, Washington, DC 20250. Comments received will be made available for public inspection at the above address during regular business hours (7 CFR 1.27(b)).

FOR FURTHER INFORMATION CONTACT: James L. Driscoll, Director, Standardization Division, FGIS, USDA, Richards-Gebaur Air Force Base, Building 221, Grandview, Missouri 64030. Telephone (816) 348-2861.

SUPPLEMENTARY INFORMATION: Standards for wheat, corn, barley, oats, rye, sorghum, flaxseed, soybeans, triticale, and mixed grain (7 CFR Part 810) have been established under the authority of the United States Grain Standards Act, (7 U.S.C. 71 *et seq.*). To comply with Executive Order 12044 and Departmental policy that no regulation exists for more than 5 years without review or repromulgation, the Federal Grain Inspection Service proposes to review the standards for barley (7 CFR 810.201 through 810.211 inclusive) during 1980-1981.

Items to be considered in this review include the continued need for the standards, improvement thereof, the need to clarify or simplify language, the possible incorporation of factors that are better indicators of end-use properties, and the degree to which technology and economic conditions have changed the effectiveness of the barley standards.

Although all aspects of the barley standards will be examined, particular attention will be focused on the malting designation and mold damage specifications. Accurate identification of malting varieties in conjunction with differing marketing trends has demonstrated a need to evaluate the malting barley designation. Interpretation and classification of mold damaged kernels according to the present standards will be reviewed to evaluate if this factor determination meets the needs of the industry.

It is the intent of FGIS, in keeping with recommendations by Congress and industry advisory committees, to propose revision of standards to more accurately reflect end-use properties utilizing objective inspection procedures whenever possible.

(Secs. 5, 18, Pub. L. 94-582, 90 Stat. 2869, 2884 (7 U.S.C. 76, 87(e)))

Done in Washington, D.C. on: September 9, 1980.

L. E. Bartelt,

Administrator.

[FR Doc. 80-28244 Filed 9-11-80; 8:45 am]

BILLING CODE 3410-02-M

federal register

Friday
September 12, 1980

Part X

Department of Commerce

Bureau of Economic Analysis

Direct Investment Surveys; Content of Survey Forms; Public Meeting

DEPARTMENT OF COMMERCE

Bureau of Economic Analysis

15 CFR Part 806

Direct Investment Surveys; Solicitation of Public Input Into Content of Survey Form; Notice of Public Meeting

AGENCY: Bureau of Economic Analysis, Commerce.

ACTIONS: (1) Solicitation of written public suggestions concerning the content of the report form for the mandatory BE-12, Benchmark Survey of Foreign Direct Investment in the United States—1980 (1980 BE-12); and

(2) Announcement of a public meeting to discuss the written suggestions submitted pursuant to action (1) and to receive verbal suggestions concerning the content of the 1980 BE-12 report form.

SUMMARY: Section 4(b) of the International Investment Survey Act of 1976, Pub. L. 94-472, 90 Stat. 2059, 22 U.S.C. 3101-3108 (the Act), requires that a benchmark survey of foreign direct investment in the United States be conducted at least once every five years. Such a survey will be conducted early in 1981 to cover the year 1980.

The Act, in Section 8(a), provides that "Officials performing functions pursuant to this Act shall secure balanced, diverse, and responsible views from qualified persons representing business, organized labor, and the academic community * * *" Because of the widespread interest in the subject matter and in order to obtain maximum input as to what information should be collected, BEA is soliciting written suggestions from the public and is also scheduling a public meeting to consider the written suggestions and to receive verbal suggestions. Both potential users of the 1980 BE-12 data and those who will be filing the 1980 BE-12 are invited to participate.

DATES: (1) Written suggestions should be received by BEA no later than October 13, 1980.

(2) The public meeting will be held on October 20, 1980 commencing at 9:30 a.m.

ADDRESSES: Room 6802, U.S. Department of Commerce, 14th Street and Constitution Avenue, N.W., Washington, D.C. (enter at center entrance on 14th Street).

Written suggestions should be sent to: U.S. Department of Commerce, Bureau of Economic Analysis, International Investment Division (BE-50), Washington, D.C. 20230. All comments, material, questions, etc., in response to this notice will be available for public inspection from 8:00 a.m. to 4:00 p.m., in room 608, 1401 K Street, N.W., Washington, D.C. 20230.

FOR FURTHER INFORMATION CONTACT: Betty L. Barker, Assistant Chief, International Investment Division, Bureau of Economic Analysis, U.S. Department of Commerce, Washington, D.C. 20230, (202) 523-0659.

SUPPLEMENTARY INFORMATION: The Act, in Section 4(b), states that the benchmark survey, "* * * shall, among other things and to the extent he (the President) determines necessary and feasible—

(1) Identify the location, nature, and magnitude of, and changes in total investment by any parent in each of its affiliates and the financial transactions between any parent and each of its affiliates;

(2) Obtain (A) information on the balance sheet of parents and affiliates and related financial data. (B) income statements, including the gross sales by primary line of business (with as much product line detail as is necessary and feasible) of parents and affiliates in each country in which they have significant operations, and (C) related information regarding trade between a parent and each of its affiliates and between each parent or affiliate and any other person;

(3) Collect employment data showing both the number of United States and foreign employees of each parent and affiliate and the levels of compensation, by country, industry, and skill level;

(4) Obtain information on tax payments by parents and affiliates by country; and

(5) Determine, by industry and country, the total dollar amount of research and development expenditures by each parent and affiliate, payments or other compensation for the transfer of technology between parents and their affiliates, and payments or other compensation received by parents or affiliates from the transfer of technology to other persons.

Regulations implementing the Act in regard to direct investment are contained in 15 CFR Part 806. Definitions and rules contained therein in regard to foreign direct investment in the United States will apply to the 1980 BE-12, with perhaps some minor modifications. Specific rules for the 1980 BE-12, including any modifications of the present rules, will appear in the Federal Register at a later date.

To assist the public in making suggestions, two report forms have been reprinted as part of this notice—the report form for the last BE-12, Survey of Foreign Direct Investment in the United States—1974, and the report form for the BE-15, Interim Survey of Foreign Direct Investment in the United States—1979. These forms illustrate the types of data collected in previous surveys. (Data collected in the 1974 BE-12 survey were published in the "Report to the Congress, Foreign Direct Investment in the United States, Volume 2: Report of the Secretary of Commerce: Benchmark Survey, 1974," April 1976; data from the 1977 BE-15 survey, which was basically the same as the 1979 BE-15 survey, were published in the July 1980 Survey of Current Business, the monthly journal of BEA.) Suggestions should be as precise as possible, preferably posing specific questions to be asked.

Written suggestions should be received by BEA no later than October 13, 1980 so that there will be time to review and summarize them for the October 20 public meeting. Written suggestions will also be accepted at the public meeting; however, the primary purpose of the meeting will be to discuss and evaluate the previously received written suggestions, including BEA's position and recommendations. Several possible changes from the 1974 BE-12 Survey that BEA is considering are:

1. Permit reporting on a fiscal year basis, rather than a calendar your basis;

2. Require reports to be submitted on a consolidated basis which was the practice for the BE-15 surveys, rather than requiring each separate legal entity to file a separate report as was done on the 1974 BE-12 survey;

3. Require identification of the ultimate beneficial owner of the investment without exception; and

4. Prepare either a special, shorter, report form for banks or require banks to complete only selected sections of the report form. This is being considered in order to reduce the reporting burden since foreign-owned U.S. banks already report the detailed information needed for policy making purposes to U.S. monetary authorities.

Following the public meeting, BEA will prepare a draft report form which will be submitted to the Office of Management and Budget for clearance pursuant to the Federal Reports Act (Pub. L. 831, 77th Congress). At the same time, BEA will also publish the draft 1980 BE-12 form, and the proposed changes to its rules to provide for the 1980 BE-12 survey, in the Federal Register. Thus, the public will at that time have the opportunity to comment on the draft BE-12 report form and on the proposed rules.

The public should be aware that decisions concerning the content and coverage of the BE-12 survey will affect other BEA forms currently used to report information on foreign direct investment in the United States—the annual interim survey (the BE-15), the quarterly surveys (the BE-605, 606, and 606B), and the Report on a Foreign Person's Establishment, Acquisition, or Purchase of the Operating Assets of a U.S.

Business Enterprise, Including Real Estate (the BE-13). For example, (1) if fiscal year reporting is permitted on the BE-12, this also will apply to the BE-15; (2) if consolidated reporting is required on the BE-12, it will continue to be required on the BE-15; (3) if identification of the ultimate beneficial owner is required on the BE-12, it will continue to be required on the BE-13. Thus, the 1980 BE-12 will determine certain aspects of the other surveys since such rule changes are generally not considered until the next BE-12 survey.

George R. Kruer,

Chief, International Investment Division, Bureau of Economic Analysis.

BILLING CODE 3510-26-M

Form Approved: OMB No. 41-R2791

FORM BE-15 (Report for U.S. Affiliate)
(REV. 8-80)

U.S. DEPARTMENT OF COMMERCE
BUREAU OF ECONOMIC ANALYSIS

INTERIM SURVEY OF
FOREIGN DIRECT INVESTMENT IN THE U.S.

1979

(This form has been approved for use as an annual report.)

RETURN REPORTS TO: U.S. Department of Commerce, Bureau of Economic Analysis BE-50(IN), Washington, D.C. 20230

NOTE: A single original copy of each form or supplement shall be filed with the Bureau of Economic Analysis; for Form BE-15, this should be the copy with the address label if such a labeled copy has been provided.

Response to this inquiry is required by law. By the same law your report to this Bureau is CONFIDENTIAL. It may be used only for analytical or statistical purposes and CANNOT be used for purposes of taxation, investigation, or regulation. The law also provides that copies retained in your files are immune from legal process.

Important

Read Instructions before completing form. The instructions given below are only a brief summary of certain ones relating to this form.

Insurance companies – See the Instructions, page 10 before completing form.

NOTE: Data to be provided in this report should represent calendar year 1979.

■ 1. **DEFINITION OF FOREIGN DIRECT INVESTMENT IN THE U.S.** – The ownership or control, directly or indirectly, by one foreign person of 10 per centum or more of the voting securities of an incorporated U.S. business enterprise or an equivalent interest in an unincorporated U.S. business enterprise, including a branch.

■ 2. **DEFINITION OF AFFILIATE** – A business enterprise located in one country which is directly or indirectly owned or controlled by a person of another country to the extent of 10 per centum or more of its voting stock for an incorporated business or an equivalent interest for an unincorporated business, including a branch.

■ 3. **DEFINITION OF U.S. AFFILIATE** – An affiliate located in the United States in which a foreign person has a direct investment.

■ 4. **WHO MUST REPORT** – Reports on Form BE-15 are required for each U.S. affiliate (except a bank), i.e., for each U.S. business enterprise in which a foreign person owned or controlled, directly or indirectly, 10 percent or more of the voting securities if an incorporated U.S. business enterprise, or an equivalent interest if an unincorporated U.S. business enterprise, at anytime during the year ending December 31, 1979.

■ 5. **CONSOLIDATED REPORTING** – A U.S. affiliate shall file on a fully consolidated basis, including in the consolidation all other U.S. affiliates in which it directly or indirectly owns more than 50 percent of the outstanding voting interest. Hereinafter, the fully consolidated entity is considered to be one U.S. affiliate. See Instructions, page 10.

■ 6. **EXEMPTION** – A U.S. affiliate as consolidated, is not required to file a report if:

(a) Each of the following three items for the U.S. affiliate (not the foreign parent's share) was between −$5 million and +$5 million during the reporting period:
   (1) Total assets,
   (2) Net sales or gross operating revenues, excluding sales taxes, and
   (3) Net income after provision for U.S. income taxes;

and

(b) The U.S. affiliate did not own 200 acres or more of U.S. land during the reporting period (if the U.S. affiliate owned 200 acres or more of U.S. land, it must report regardless of the value of the three items listed above);

or

(c) The U.S. affiliate is a bank, i.e., a business enterprise in which over 50 percent of its total revenues are generated by activities classified in industry code 600.

■ 7. **ASSISTANCE** – Telephone (202) 523–0547

■ 8. **DUE DATE** – A completed report on Form BE-15 shall be due no later than August 31, 1980.

■ 9. **GENERAL NOTES:**

A. Figures such as the number of acres, the number of employees and hours worked should be reported to the nearest whole unit.

B. Currency amounts should be reported in U.S. dollars rounded to thousands (omitting 000). Do not enter amounts in the shaded portions of each line.

EXAMPLE: If amount is $1,334,615.00, report as:

BIL.	MIL.	THOU.	DOLS.
		1,335	

C. If an item is between + or −$500.00 enter "0."

D. Use parentheses to indicate negative numbers.

E. All questions should be answered in the context of the reporting period given in items 4 and 5.

Part I – IDENTIFICATION OF U.S. AFFILIATE

1. Name and address of U.S. affiliate *(Enter name and mailing address in blocks below. Skip a single block between words.)*

1001 [ ] ← BEA USE ONLY   BEA USE ONLY → [ ]

Name of U.S. Affiliate
1002 [ ]

Street or P.O. Box
1003 [ ]

City and State   ZIP Code
1004 [ ]

2. Enter primary employer identification number used by U.S. affiliate to file income and payroll taxes.

1005 [ ] ← E.I. Number

3. Is the reported U.S. affiliate named in item 1 above separately incorporated in the United States, including its territories and possessions? *(Mark one)*

1006 1 ☐ Yes 2 ☐ No

REPORTING PERIOD

Report should be for the calendar year 1979; see Instructions, Reporting Period.		Month	Day	Year
4. The term "Opening balance" in this report always refers to data as of →	1007			19
5. The term "Closing balance" in this report always refers to data as of →	1008			19

Direct Ownership of U.S. affiliate Named in Item 1 – Percent of voting stock, for an incorporated U.S. affiliate or an equivalent interest for an unincorporated U.S. affiliate, owned:		BEA USE ONLY	Reporting Period Closing	Reporting Period Opening
Directly by Foreign parent(s) of this U.S. affiliate – *(If more than two, continue on a separate sheet)* Name of each foreign parent:	Country of Location of Foreign Parent			
6. 1009			%	%
7. 1010			%	%
Directly by another U.S. affiliate(s) of foreign parent(s) – *(If more than two, continue on a separate sheet)* Name of each other U.S. affiliate holding a direct interest in the U.S. affiliate identified in item 1 above:	Country of Foreign Parent of each other U.S. Affiliate			
8. 1019			%	%
9. 1020			%	%
10. Directly by other persons (do not list names): give percentage of direct interests held by all other persons 1029			%	%
TOTAL →			100.0 %	100.0 %

11. Complete this item only if a U.S. affiliate listed in 8 or 9 is not in turn directly foreign-owned to the extent of 10 percent or more; if it is not, give the name and address of the U.S. affiliate in the ownership chain which is directly foreign-owned *(If more than two, continue on a separate sheet)*:	BEA USE ONLY	Country of Foreign Parent of each affiliate named here
Name of U.S. affiliate which is directly foreign-owned Street or P.O. Box City, State and ZIP Code 1030		
Name of U.S. affiliate (additional) directly foreign-owned Street or P.O. Box City, State and ZIP Code 1031		

12. Number of U.S. affiliates fully consolidated *(Enter number)* If this report is for a single U.S. affiliate enter "1" in the box. If more than one U.S. affiliate is fully consolidated in this report, enter the number of U.S. affiliates fully consolidated. (Hereinafter they are considered to be one U.S. affiliate.) Exclude all foreign business enterprises owned by this U.S. affiliate from full consolidation. *See consolidation instructions, page 10 of Instructions.*

1032 [ ] *If number is greater than one, Supplement A must be completed.*

13. **U.S. Affiliates NOT fully consolidated** – Number of U.S. affiliates in which this U.S. affiliate held a direct equity interest but which ARE NOT fully consolidated in this report.

1033 [ ] *If an entry here, Supplement B must be completed.*

PURPOSE – Reports on this form are required in order to update the data reported in the Benchmark Survey of Foreign Direct Investment in the United States – 1974 on the operations of foreign owned U.S. business enterprises, except banks.

MANDATORY – This survey is being conducted pursuant to the International Investment Survey Act of 1976 (P.L. 94–472, 90 Stat. 2059, 22 U.S.C. 3101 to 3108 — hereinafter "the Act"), and the filing of reports is mandatory pursuant to Section 5(b)(2) of the Act (22 U.S.C. 3104).

PENALTIES – Whoever fails to report may be subject to a civil penalty not exceeding $10,000 and to injunctive relief commanding such person to comply, or both. Whoever willfully fails to report shall be fined not more than $10,000 and, if an individual, may be imprisoned for not more than one year, or both. Any officer, director, employee, or agent of any corporation who knowingly participates in such violations, upon conviction, may be punished by a like fine, imprisonment or both. (See Section 6 of the Act, 22 U.S.C. 3105).

CONFIDENTIALITY – The information filed in this report may be used only for analytical and statistical purposes and access to the information shall be available only to officials and employees (including consultants and contractors and their employees) of agencies designated by the President to perform functions under the Act. The President may authorize the exchange of the information between agencies or officials designated to perform functions under the Act, but only for analytical and statistical purposes. No official or employee (including consultants and contractors and their employees) shall publish or make available any information collected under the Act in such a manner that the person to whom the information relates can be specifically identified. Reports and copies of reports prepared pursuant to the Act are confidential and their submission or disclosure shall not be compelled by any person without the prior written permission of the person filing the report and the customer of such person where the information supplied is identifiable as being derived from the records of such customer (22 U.S.C. 3104).

PERSON TO CONSULT CONCERNING QUESTIONS ABOUT THIS REPORT	Print name and address	TELEPHONE NUMBER Area Code	Number	Extension

CERTIFICATION The undersigned official certifies that the information contained in this report is correct and complete to the best of his/her knowledge.

Authorized Official's Signature	Type Name and Title	Date

USCOMM-DC 92860-P79

Part I – IDENTIFICATION OF U.S. AFFILIATE (Continued)

14. Does any U.S. affiliate fully consolidated in this report own, directly or indirectly, over 50 percent of the outstanding voting stock of a domestic corporation that is not a U.S. affiliate? (See definition of U.S. affiliate) (Mark one) If "Yes," do not fully consolidate them in this report – include them on the equity basis only. [ ] 1 Yes [ ] 2 No

15. Accounting changes and prior period adjustments – Has this reporting U.S. affiliate, as consolidated, restated the financial statements of the prior period (1978), resulting in opening balances on this report different from the closing balances as reported on the 1978 Form BE-15? (Mark one) If "Yes," briefly describe the nature of and the reason for the restatement. [ ] 1 Yes [ ] 2 No

16. Major activity of the U.S. affiliate (Mark one)
- a. Extracting oil or minerals (including exploration and development) [ ] 1
- b. Manufacturing (fabricating, assembling, processing) [ ] 2
- c. Selling or distributing goods [ ] 3
- d. Providing a service [ ] 4
- e. Real estate (investing in or engaging in as an operator, manager, developer, lessor, agent, or broker) [ ] 5
- f. Other – (Specify) _____ [ ] 6

17. Major product or service involved in this activity

See Instructions, II.G., regarding the filing of Form BE-607, Industry Classification Questionnaire, by a new affiliate or by an existing affiliate whose industry classification has changed.

BEA USE ONLY

1037 [1]

1038 [1]

1039 [1]

1040 [1]

Part II – FINANCIAL AND OPERATING DATA OF U.S. AFFILIATE (Report all amounts in thousands of U.S. dollars)

SECTION A – BALANCE SHEET OF U.S. AFFILIATE

ASSETS	Balance Closing (1) Bil. Mil. Thous. Dols.	Balance Opening (2) Bil. Mil. Thous. Dols.
Current Assets:		
18. Trade accounts and notes receivable – Net of allowance for doubtful accounts	$	$
19. Other current receivables		
20. Inventories – land development companies should exclude land held for resale (include in item 21) finance and insurance companies should exclude their inventories of marketable securities (include in item 23)		
21. Other current assets, including cash		
INVESTMENTS		
22. Investment in foreign affiliates and unconsolidated U.S. affiliates – Include, under the equity method of accounting, material investments in all foreign affiliates, both incorporated and unincorporated, and all unconsolidated U.S. affiliates owned 20 percent or more		
23. Other investments		
Fixed Assets:		
24. Property, plant and equipment at historical (gross) cost		
25. Less: Accumulated depreciation, amortization and depletion		
26. Property, plant and equipment, net – Item 24 less Item 25		
27. Other non-current assets		
28. TOTAL ASSETS – Sum of items 18 thru 23 and 26 and 27 →	$	$
LIABILITIES AND OWNER'S EQUITY		
Current liabilities:		
29. Trade accounts and notes payable	$	$
30. Other current liabilities – Include current portion of long-term debt		
Long-term debt and other non-current liabilities:		
31. Long-term debt – Exclude current portion, but include capitalized lease obligations		
32. Other non-current liabilities – Items other than those identified as long-term debt, such as deferred taxes. Include minority interests in consolidated U.S. subsidiaries.		
33. TOTAL LIABILITIES – Sum of items 29 thru 32 →	$	$
Owner's equity: Incorporated in U.S. Only		
34. Capital stock and additional paid-in-capital	$	$
35. Retained earnings (deficit)		
36. Less: Treasury stock		
Incorporated and unincorporated		
37. TOTAL OWNERS' EQUITY – Sum of items 34 + 35 – 36 for U.S. incorporated business enterprise or total equity for unincorporated business enterprise such as a branch, partnership, etc.	$	$
38. TOTAL LIABILITIES AND OWNER'S EQUITY – Item 33 plus Item 37 →	$	$

SECTION B – INCOME STATEMENT OF U.S. AFFILIATE

Net income must be calculated in accordance with the "all inclusive" concept of the income statement	Amount (3) Bil. Mil. Thous. Dols.
39. Net sales or gross operating revenues, excluding sales taxes – Gross sales and operating revenues less returns and allowances, and discounts, and excluding sales and excise taxes. All sales, and commissions therefor, should be included, whether or not physical possession was taken of the goods	$
40. Cost of goods sold and other expenses relating to operations	
41. Income from operations – Items 39 less item 40	$
42. Equity in net income of unconsolidated business enterprises (domestic and foreign) in which this U.S. affiliate has equity investment – Equity in net income (distributed and undistributed) after income taxes	$
43. Other income – (Specify)	
Other expenses:	
44. U.S. income taxes – Federal, state and local	$
45. Minority interests in net income (loss) of consolidated U.S. affiliates	
46. Other – (Specify)	
47. Net income – Equals items 41 + 42 + 43 – 44 – 45 – 46	$

Part II – FINANCIAL AND OPERATING DATA OF U.S. AFFILIATE (Continued) (Report all amounts in thousands of U.S. dollars)

SECTION C — STATEMENT OF RETAINED EARNINGS

To be completed only by a U.S. affiliate that is incorporated in the U.S.

		Amount (1) Bil. Mil. Thous. Dols.
46. Balance at beginning of period as previously reported	2071	$
47. Adjustments to opening balance – Specify	2072	
50. Balance at beginning of period as restated – Same as item 35, column 2	2073	
51. Net income – Same as item 47	2074	
52. Less: Cash dividends declared	2075	
53. Other changes; increase or (decrease), including stock dividends – Specify	2076	
54. Retained earnings at end of period – Same as item 35, column 1. Equals items 50 + 51 – 52 ± 53	2077	$

SECTION D — MISCELLANEOUS ITEMS

		Amount (1) Bil. Mil. Thous. Dols.
Expenditures for plant and equipment during the year – Include all acquisitions, improvements, and additions to plant and equipment which are part of fixed assets (item 24 above) on the balance sheet. Include capitalized exploration and development costs charged to plant and equipment. Do not include expenditures for land. Do not include as expenditures plant and equipment acquired as the result of the acquisition by, of the merger into, this U.S. affiliate of another U.S. business enterprise.		
55. Amount for 1979 – Include capitalized portion of item 56 below, except charges for land	2078	$
56. Expenditures for new plant and equipment – Include that portion of item 55 which represents expenditures for new plant and equipment during 1979	2079	$
57. Exploration and development charges, total – Include capitalized E & D costs charged to fixed assets, including land considerations. Any shown in item 55 above should also be picked-up here.	2080	$
Depreciation and like charges as incurred during the year for items included in fixed assets accounts, item 24.		
58. Depletion, etc. – charge to the income statement for 1979 relating to gross costs of property	2081	$
59. Depreciation, etc. – charge to the income statement for 1979 relating to gross costs of plant and equipment	2082	$
60. Research and development (R & D) expenditures, calculated in accordance with FASB 2 – All R & D costs incurred, including depreciation, amortization, wages and salaries, taxes, costs of materials and supplies, allocated overhead, indirect R & D costs, and the cost of R & D conducted by others on behalf of the U.S. affiliate. Exclude costs incurred in R & D activities conducted for others under a contractual arrangement.	2083	$
61. Taxes (other than income and payroll taxes) and non-tax payments (other than production royalty payments) – Include amounts paid or accrued for the year, net of refunds or credits, to Federal, State, and local governments, their subdivisions and agencies for sales, consumption, and excise taxes; property and other taxes on the value of assets and capital; any remaining taxes (other than income and payroll taxes); and all payments of non-tax liabilities (other than production royalty payments), such as import and export duties, license fees, fines, penalties, and similar items	2084	$
62. LAND: Total value, at historical (gross) costs, of all land owned at end of 1979 – Sum of items 63 through 65	2085	$
63. Carried in investments, item 23, column 1	2086	
64. Carried in fixed assets, item 24, column 1	2087	
65. Carried elsewhere in the balance sheet, including land held for resale carried in item 21, or land carried in other concurrent assets, item 27, among other places	2088	

66. Number of acres of land used at the end of 1979 for agricultural purposes, including timber growing, i.e., for one of the purposes included in codes 010, agricultural production-crops; 020, agricultural production – livestock, except beef cattle feedlots; 021, agricultural production – beef cattle feedlots; and 080, forestry. (See Industry Classifications and Export and Import Trade Classifications Booklets) 2089	Acres owned (1)	Acres leased from others (2)
	1	2

SECTION E — EMPLOYMENT AND EMPLOYEE COMPENSATION (See Instructions, page 12, for details of data requirements)

NOTE: CERTAIN ITEMS TO BE COMPLETED ONLY BY U.S. AFFILIATES CLASSIFIED IN THE MANUFACTURING INDUSTRY – The data cells in columns 2 and 3 for items 67, 68, and 70 are to be completed only by U.S. affiliates classified in manufacturing (i.e., in BEA industry codes 210 through 390). Column 1 must be completed by all U.S. affiliates. See page 11, Instructions, V.A., for determination of industry code. Production and related workers for manufacturing are those employees up to and including working foreman, but excluding other supervisory employees, who are involved in the physical production of goods, handling and storage of goods, related services (e.g., maintenance and repair), and auxiliary production for plant's own use (e.g., power plant). For affiliates classified in manufacturing which also have activities in industries outside manufacturing, consider as production workers only those employees, as defined, who are associated with manufacturing activities; all employees associated with non-manufacturing activities should be considered as non-production workers.

		To be completed by all U.S. affiliates: Total (1)	To be completed only by U.S. affiliates classified in manufacturing industry: Production and related workers (Read note at left before completing) (2)	Nonproduction workers (Read note at left before completing) (3)
		NUMBER	NUMBER	NUMBER
67. Number of employees – Average for the reporting period, including part-time employees	2090	1	2	3
68. Hours worked by production and related workers – See Instructions, page 11.	2091		2	
		Bil. Mil. Thous. Dols.	Bil. Mil. Thous. Dols.	Bil. Mil. Thous. Dols.
69. Employee compensation – For column (1), equals sum of items 70 and 71	2092	1 $		
70. Wages and salaries	2093	1 $	2 $	3 $
71. Employee benefit plans	2094	1 $		

SECTION F — COMPOSITION OF EXTERNAL FINANCING

CLOSING BALANCES		Total – Sum of Columns (2) through (4) (1)	Position with: Foreign parent(s) and foreign affiliates of foreign parent(s) (2)	Other foreign persons (3)	All U.S. persons (4)
Current Liabilities: Sum of items 72 and 73, col. 1, must equal sum of items 29 and 30, col. 1.		Bil. Mil. Thous. Dols.	Bil. Mil. Thous. Dols.	Bil. Mil. Thous. Dols.	Bil. Mil. Thous. Dols.
72. To banks	2095	1 $	2 $	3 $	4 $
73. To other than banks	2096	1 $	2 $	3 $	4 $
Long-term debt: Sum of items 74 and 75, col. 1, must equal item 31, col. 1.					
74. To banks	2097	1 $	2 $	3 $	4 $
75. To other than banks	2098	1 $	2 $	3 $	4 $
76. Current Receivables: Col. 1 must equal sum of items 18 and 19, col. 1	2099	1 $	2 $	3 $	4 $
BEA USE ONLY	2100		2		4

SECTION G — EXPORTS AND IMPORTS OF U.S. AFFILIATES (GOODS ONLY, DO NOT INCLUDE SERVICES)

Note: The value of exports or imports requested in this section is not synonymous with sales to, or purchases from, a foreign person. Data in this section are to cover only goods which physically left or entered the U.S. customs area in 1979. Include capital goods.

See page 12, Instructions, V.B., for details of data requirements.		TOTAL (1)	Shipped to (by) foreign parent(s) and foreign affiliate(s) of foreign parent(s) (2)	Shipped to (by) all other foreigners (3)
		Bil. Mil. Thous. Dols.	Bil. Mil. Thous. Dols.	Bil. Mil. Thous. Dols.
77. Total exports, including capital goods – Shipped by U.S. affiliate to foreigners (valued f.a.s. U.S. port)	2101	1 $	2 $	3 $
78. Total imports, including capital goods – Shipped to U.S. affiliate by foreigners (valued f.a.s. foreign port)	2102	1 $	2 $	3 $

USCOMM-DC 69727-P80

Part III – SCHEDULE OF EMPLOYEES, LAND AND MINERAL RIGHTS, AND PROPERTY, PLANT AND EQUIPMENT, BY STATE OF LOCATION

State	BEA USE ONLY	State Code	Number of employees (Total must equal Item 67 column 1)	Number of acres of land and mineral rights (Do not duplicate in column 5 acres reported as land owned in column 4) – Owned: Land	Owned: Mineral rights	Land and mineral rights leased from others	Historical (gross) value of all land and other property, plant, and equipment – Land – Total must equal the total value given in Item 72, column 1	Other property, plant and equipment – Total must equal Item 24, column 1, less Item 64, column 1
	(1)	(2)	(3)	(4)	(5)	(6)	(7)	(8)
			NUMBER	NUMBER	NUMBER	NUMBER	Bil. Mil. Thous. Dolls.	Bil. Mil. Thous. Dolls.
79. Total at end of year, or for number of employees, average for year – For each column, total must equal sum of data for all States and other geographic areas, Items 80 through 138 3103	1		3	4	5	6	7 $	8 $
80. Alabama 3104	1	2 01	3	4	5	6	7 $	8 $
81. Alaska 3105	1	2 02	3	4	5	6	7 $	8 $
82. Arizona 3106	1	2 04	3	4	5	6	7 $	8 $
83. Arkansas 3107	1	2 05	3	4	5	6	7 $	8 $
84. California 3108	1	2 06	3	4	5	6	7 $	8 $
85. Colorado 3109	1	2 08	3	4	5	6	7 $	8 $
86. Connecticut 3110	1	2 09	3	4	5	6	7 $	8 $
87. Delaware 3111	1	2 10	3	4	5	6	7 $	8 $
88. Florida 3112	1	2 12	3	4	5	6	7 $	8 $
89. Georgia 3113	1	2 13	3	4	5	6	7 $	8 $
90. Hawaii 3114	1	2 15	3	4	5	6	7 $	8 $
91. Idaho 3115	1	2 16	3	4	5	6	7 $	8 $
92. Illinois 3116	1	2 17	3	4	5	6	7 $	8 $
93. Indiana 3117	1	2 18	3	4	5	6	7 $	8 $
94. Iowa 3118	1	2 19	3	4	5	6	7 $	8 $
95. Kansas 3119	1	2 20	3	4	5	6	7 $	8 $
96. Kentucky 3120	1	2 21	3	4	5	6	7 $	8 $
97. Louisiana 3121	1	2 22	3	4	5	6	7 $	8 $
98. Maine 3122	1	2 23	3	4	5	6	7 $	8 $
99. Maryland 3123	1	2 24	3	4	5	6	7 $	8 $
100. Massachusetts 3124	1	2 25	3	4	5	6	7 $	8 $
101. Michigan 3125	1	2 26	3	4	5	6	7 $	8 $
102. Minnesota 3126	1	2 27	3	4	5	6	7 $	8 $
103. Mississippi 3127	1	2 28	3	4	5	6	7 $	8 $
104. Missouri 3128	1	2 29	3	4	5	6	7 $	8 $
105. Montana 3129	1	2 30	3	4	5	6	7 $	8 $
106. Nebraska 3130	1	2 31	3	4	5	6	7 $	8 $
107. Nevada 3131	1	2 32	3	4	5	6	7 $	8 $
108. New Hampshire 3132	1	2 33	3	4	5	6	7 $	8 $
109. New Jersey 3133	1	2 34	3	4	5	6	7 $	8 $
110. New Mexico 3134	1	2 35	3	4	5	6	7 $	8 $
111. New York 3135	1	2 36	3	4	5	6	7 $	8 $
112. North Carolina 3136	1	2 37	3	4	5	6	7 $	8 $
113. North Dakota 3137	1	2 38	3	4	5	6	7 $	8 $
114. Ohio 3138	1	2 39	3	4	5	6	7 $	8 $
115. Oklahoma 3139	1	2 40	3	4	5	6	7 $	8 $
116. Oregon 3140	1	2 41	3	4	5	6	7 $	8 $
117. Pennsylvania 3141	1	2 42	3	4	5	6	7 $	8 $
118. Rhode Island 3142	1	2 44	3	4	5	6	7 $	8 $
119. South Carolina 3143	1	2 45	3	4	5	6	7 $	8 $
120. South Dakota 3144	1	2 46	3	4	5	6	7 $	8 $
121. Tennessee 3145	1	2 47	3	4	5	6	7 $	8 $
122. Texas 3146	1	2 48	3	4	5	6	7 $	8 $
123. Utah 3147	1	2 49	3	4	5	6	7 $	8 $
124. Vermont 3148	1	2 50	3	4	5	6	7 $	8 $
125. Virginia 3149	1	2 51	3	4	5	6	7 $	8 $
126. Washington 3150	1	2 53	3	4	5	6	7 $	8 $
127. West Virginia 3151	1	2 54	3	4	5	6	7 $	8 $
128. Wisconsin 3152	1	2 55	3	4	5	6	7 $	8 $
129. Wyoming 3153	1	2 56	3	4	5	6	7 $	8 $
130. District of Columbia 3154	1	2 11	3	4	5	6	7 $	8 $
131. Panama Canal Zone 3155	1	2 07	3	4	5	6	7 $	8 $
132. Puerto Rico 3156	1	2 43	3	4	5	6	7 $	8 $
133. Virgin Islands 3157	1	2 52	3	4	5	6	7 $	8 $
134. Guam 3158	1	2 14	3	4	5	6	7 $	8 $
135. American Samoa 3159	1	2 03	3	4	5	6	7 $	8 $
136. Other U.S. Territories and Possessions 3160	1	2 60	3	4	5	6	7 $	8 $
137. U.S. Offshore Oil and Gas Sites 3161	1	2 65	3	4	5	6	7 $	8 $
138. Foreign * (See below) 3162	1	2 70	3	4	5	6	7 $	8 $

* Include only that of U.S. business enterprises fully consolidated into the U.S. affiliate. No foreign affiliates, incorporated or unincorporated, can be considered part of the reporting U.S. affiliate.

FORM BE-15 (REV. 5-80)

Form Approved: OMB No. 41-R2991

FORM BE-15 Supplement A
(REV. 2-79)

U.S. DEPARTMENT OF COMMERCE
BUREAU OF ECONOMIC ANALYSIS

BEA USE ONLY ▶ Page No.

LIST OF ALL U.S. CORPORATIONS FULLY CONSOLIDATED INTO THE REPORTING U.S. AFFILIATE

NOTE: If you filed a Supplement A with your 1977 or 1978 BE-15 report, in lieu of completing a new Supplement A, you may substitute a copy of the 1977 or 1978 Supplement A which you have updated to show any additions, deletions, or other changes.

Name of U.S. affiliate as shown in Item 1, Part I of BE-15

Supplement A – List of All U.S. Corporations Fully Consolidated into the Reporting U.S. Affiliate, must be completed by a reporting affiliate which consolidates financial and operating data of any other U.S. affiliate(s). The number of U.S. affiliates listed below plus the reporting U.S. affiliate must agree with Item 12, Part I of BE-15. Continue listing onto as many additional copied pages as necessary.

Employer Identification Number as shown in Item 2, Part I of BE-15 → 4163

BEA USE ONLY (1)	Name of each U.S. affiliate consolidated (as represented in Item 12, Part I) (2)	Employer Identification Number used by U.S. affiliate listed in Column 2 to file income and payroll taxes (3)	Name of U.S. affiliate which holds the direct equity interest in the U.S. affiliate listed in Column 2 (4)	Percentage of direct ownership which the U.S. affiliate listed in Column 4 has in the U.S. affiliate listed in Column 2. (Enter percentage to nearest tenth.) (5)
4164				%
4165				%
4166				%
4167				%
4168				%
4169				%
4170				%
4171				%
4172				%
4173				%
4174				%
4175				%
4176				%
4177				%
4178				%
4179				%
4180				%
4181				%
4182				%
4183				%
4184				%
4185				%
4186				%

USCOMM-DC 8127-P-80

FORM BE-15 (REV. 9-80)

BE-15 SUPPLEMENT A – LIST OF ALL U.S. CORPORATIONS FULLY CONSOLIDATED INTO THE REPORTING U.S. AFFILIATE – Continued

Page No. _____

BEA USE ONLY (1)	Name of each U.S. affiliate consolidated (as represented in Item 12, Part I) (2)	Employer Identification Number used by U.S. affiliate listed in Column 2 to file income and payroll taxes (3)	Name of U.S. affiliate which holds the direct equity interest in the U.S. affiliate listed in Column 2 (4)	Percentage of direct ownership which the U.S. affiliate listed in Column 4 has in the U.S. affiliate listed in Column 2. (Enter percentage to nearest tenth) (5)
4187				. %
4188				. %
4189				. %
4190				. %
4191				. %
4192				. %
4193				. %
4194				. %
4195				. %
4196				. %
4197				. %
4198				. %
4199				. %
4200				. %
4201				. %
4202				. %
4203				. %
4204				. %
4205				. %
4206				. %
4207				. %
4208				. %
4209				. %
4210				. %

Form Approved: OMB No. 41-R2991

FORM BE-15 Supplement B
(REV. 9-80)

U.S. DEPARTMENT OF COMMERCE
BUREAU OF ECONOMIC ANALYSIS

BEA USE ONLY ▶ _____ (Page No. _____

Name of U.S. affiliate as shown in Item 1, Part I of BE-15 _____

LIST OF ALL U.S. AFFILIATES IN WHICH THE REPORTING AFFILIATE (AS CONSOLIDATED) HAS A DIRECT EQUITY INTEREST BUT WHICH ARE NOT FULLY CONSOLIDATED

NOTE: If you filed a Supplement B with your 1977 or 1978 report, in lieu of completing a new Supplement B, you may substitute a copy of the 1977 or 1978 Supplement B which has been updated to show any additions, deletions, or other changes.

Supplement B – List of All U.S. Affiliates in Which the Reporting Affiliate (as Consolidated) Has a Direct Equity Interest but Which Are Not Fully Consolidated must be completed by a reporting affiliate which filed a BE-15 and has a direct ownership interest in a U.S. affiliate(s) which is (are) not fully consolidated. The number of U.S. affiliates listed below must agree with Item 13, Part I, of BE-15. Continue listing onto as many additional copied pages as necessary.

Employer Identification Number as shown in Item 2, Part I of BE-15 _____ 5211 [ ] - [ ]

BEA USE ONLY (1)	Name of each U.S. affiliate in which a direct interest is held but which is not listed in Supplement A (2)	[illegible] (3)	[illegible] (4)	Percentage of direct ownership in the U.S. affiliate listed in Column 2 held by the reporting affiliate shown in Item 1, Part I of BE-15. (Enter percentage to nearest 0.1%) (5)
5212 1	2	3	4	5 %
5213 1	2	3	4	5 %
5214 1	2	3	4	5 %
5215 1	2	3	4	5 %
5216 1	2	3	4	5 %
5217 1	2	3	4	5 %
5218 1	2	3	4	5 %
5219 1	2	3	4	5 %
5220 1	2	3	4	5 %
5221 1	2	3	4	5 %
5222 1	2	3	4	5 %

FORM BE-15 INDEX-5-80

BE-15 Supplement B – LIST OF ALL U.S. AFFILIATES IN WHICH THE REPORTING AFFILIATE (AS CONSOLIDATED) HAS DIRECT EQUITY INTEREST BUT WHICH ARE NOT FULLY CONSOLIDATED (Continued)

Page No. ____

BEA USE ONLY (1)	Name of each U.S. affiliate in which a direct interest is held but which is not listed in Supplement A (2)	Address of each U.S. affiliate listed in Column 2. Give number, street, city, State, and ZIP Code. (3)	Employer Identification Number used by U.S. affiliate listed in Column 2 to file income and payroll taxes (4)	Percentage of direct ownership in the U.S. affiliate listed in Column 2 held by the reporting affiliate named in Item 1, Part I of BE-15. (Enter percentage to nearest tenth.) (5)
1	2	3	4	5
9223				. %
9224				. %
9225				. %
9226				. %
9227				. %
9228				. %
9229				. %
9230				. %
9231				. %
9232				. %
9233				. %

INTERIM SURVEY OF FOREIGN DIRECT INVESTMENT IN THE U.S. 1979

INSTRUCTIONS

Purpose – Reports on this form are required in order to update the data reported in the Benchmark Survey of Foreign Direct Investment in the United States – 1974 on the operations of foreign-owned U.S. business enterprises, except banks. However, filing this report is not contingent upon having filed a report in the 1974 Benchmark Survey.

Authority – Reports on Form BE-15 are mandatory under Section 5(b) (2) of the International Investment Survey Act of 1976 (P.L. 94–472, 90 Stat. 2059, 22 U.S.C. 3101–3108––hereinafter "the Act"). In Section 3 of Executive Order 11961, the President designated the Department of Commerce as the federal agency responsible for collecting the required data on direct investment, and the Secretary of Commerce has assigned this responsibility to the Bureau of Economic Analysis. The implementing regulations are contained in Title 15, CFR, Part 806.

This report has been approved by the Office of Management and Budget under the Federal Reports Act (Public Law No. 831, 77th Congress).

Penalties – Whoever fails to report may be subject to a civil penalty not exceeding $10,000 and to injunctive relief commanding such person to comply, or both. Whoever willfully fails to report shall be fined not more than $10,000 and, if an individual, may be imprisoned for not more than one year, or both. Any officer, director, employee, or agent of any corporation who knowingly participates in such violation, upon conviction, may be punished by a like fine, imprisonment, or both. (See Section 6 of the Act, 22 U.S.C. 3105.)

Confidentiality – The information filed in this report may be used only for analytical and statistical purposes and access to the information shall be available only to officials and employees (including consultants and contractors and their employees) of agencies designated by the President to perform functions under the Act. The President may authorize the exchange of the information between agencies or officials designated to perform functions under the Act, but only for analytical and statistical purposes. No official or employee (including consultants and contractors and their employees) shall publish or make available any information collected under the Act in such a manner that the person to whom the information relates can be specifically identified. Reports and copies of reports prepared pursuant to the Act are confidential and their submission or disclosure shall not be compelled by any person without the prior written permission of the person filing the report and the customer of such person where the information supplied is identifiable as being derived from the records of such customer (22 U.S.C. 3104).

I. DEFINITIONS

A. **United States**, when used in a geographic sense, means the several States, the District of Columbia, the Commonwealth of Puerto Rico, the Canal Zone, and all territories and possessions of the United States.

B. **Foreign**, when used in a geographic sense, means that which is situated outside the United States or which belongs to or is characteristic of a country other than the United States.

C. **Person** means any individual, branch, partnership, association, estate, trust, corporation, or other organization (whether or not organized under the laws of any State), and any government (including a foreign government, the United States Government, a State or local government, and any agency, corporation, financial institution, or other entity or instrumentality thereof, including a government-sponsored agency).

D. **Foreign person** means any person resident outside the United States or subject to the jurisdiction of a country other than the United States.

E. **Direct investment** means the ownership or control, directly or indirectly, by one person of 10 per centum or more of the voting securities of an incorporated business enterprise or an equivalent interest in an unincorporated business enterprise.

F. **Foreign direct investment in the United States** means the ownership or control, directly or indirectly, by one foreign person of 10 per centum or more of the voting securities of an incorporated U.S. business enterprise or an equivalent interest in an unincorporated U.S. business enterprise, including a branch.

G. **Branch** means the operations or activities conducted by a person in a different location in its own name rather than through an incorporated entity.

H. **Affiliate** means a business enterprise located in one country which is directly or indirectly owned or controlled by a person of another country to the extent of 10 per centum or more of its voting stock for an incorporated business or an equivalent interest for an unincorporated business, including a branch.

I. **U.S. affiliate** means an affiliate located in the United States in which a foreign person has a direct investment.

J. **Foreign parent** means the foreign person, or the first person outside the United States in a foreign chain of ownership, which has direct investment in a U.S. business enterprise, including a branch.

K. **Affiliated foreign group** means (i) the foreign parent, (ii) any foreign person, proceeding up the foreign parent ownership chain, which owns more than 50 per centum of the person below it up to and including that person which is not owned more than 50 per centum by another foreign person, and (iii) any foreign person, proceeding down the ownership chain(s) of each of these members, which is owned more than 50 per centum by the person above it.

L. **Foreign affiliate of foreign parent** means, with reference to a given U.S. affiliate, any member of the affiliated foreign group owning the affiliate that is not a foreign parent of the affiliate.

M. **U.S. corporation** means a business enterprise incorporated in the United States.

N. **Business enterprise** means any organization, association, branch, or venture which exists for profitmaking purposes or to otherwise secure economic advantage, and any ownership of any real estate.

O. **Lease** is a contract by which one person gives another person the use and possession of tangible property (other than real estate) for a specified time in return for agreed-upon payments.

P. **Banking** includes business enterprises engaged in deposit banking, Edge Act corporations engaged in international or foreign banking, U.S. branches and agencies of foreign banks whether or not they accept domestic deposits, and bank holding companies, i.e., holding companies for which over 50 percent of their total income is from banks which they hold.

USCOMM-DC 59727-P80

INSTRUCTIONS FOR BE-15 (Continued)

II. GENERAL INSTRUCTIONS

A. Who must report – Reports on Form BE-15 are required for each U.S. business enterprise (except a bank), in which a foreign person owned or controlled, directly or indirectly, 10 percent or more of the voting securities if an incorporated U.S. business enterprise, or an equivalent interest if an unincorporated U.S. business enterprise, at anytime during the year ending December 31, 1978. Reports are required even though the U.S. business enterprise may have been established, acquired, liquidated, sold, or inactivated during the reporting period.

B. Consolidated reporting by U.S. affiliates – A U.S. affiliate shall file on a fully consolidated basis, including in the consolidation all other **U.S. affiliates** in which it directly or indirectly owns more than 50 per cent of the outstanding voting interest. (Foreign subsidiaries of the U.S. affiliate are **not** to be included in the consolidation, except as provided below under the equity method of accounting.) However, separate reports may be filed where a given U.S. affiliate is not normally fully consolidated due to unrelated operations or lack of control, provided written permission has been requested from and granted by BEA. Hereinafter the fully consolidated entity is considered to be one U.S. affiliate.

A U.S. affiliate which is not fully consolidated into its U.S. parent's report and so noted on Supplement B must file its own Form BE-15.

C. Equity method of accounting – Investments by the U.S. affiliate in business enterprises not fully consolidated and which are 20 percent or more owned shall be accounted for following the equity method of accounting. However, for investments in foreign affiliates, intercompany items are not to be eliminated.

D. Reporting by unincorporated U.S. affiliates – A Form BE-15 shall be filed for each unincorporated U.S. affiliate, except a bank, but including a branch, which is directly owned 10 percent or more by a foreign person. Two or more such directly owned U.S. affiliates may not be combined on a single BE-15. An indirectly owned unincorporated U.S. affiliate should be consolidated on the report with the U.S. affiliate which holds the equity interest in it, provided it meets the usual consolidation criterion of being more than 50 percent owned. Otherwise, a separate report is required for each indirectly owned unincorporated U.S. affiliate.

E. Exemption – A U.S. affiliate as consolidated, is not required to file a report if:

(a) Each of the following three items for the U.S. affiliate (not the foreign parent's share) was between –$5 million and +$5 million during the reporting period:

(1) Total assets,

(2) Net sales or gross operating revenues, excluding sales taxes, and

(3) Net income after provision for U.S. income taxes,

and

(b) The U.S. affiliate did not own 200 acres or more of U.S. land during the reporting period (if the U.S. affiliate owned 200 acres or more of U.S. land, it must report regardless of the value of the three items listed above);

or

(c) The U.S. affiliate is a bank, i.e., a business enterprise in which over 50 percent of its total revenues are generated by activities classified in industry code 600.

F. Reporting period – Reports should be submitted on a calendar year basis for the year ending December 31, 1979. If the estimation of annual data based upon interim reports is necessary in order to present the data on or closely relating to a calendar year basis, such estimates are acceptable. If it would cause an undue burden on a company to provide data on a calendar year basis, a report may be submitted concerning a year ending between November 16, 1979 and February 15, 1980, inclusive, the actual date coinciding with the actual ending date of a fiscal year or a fiscal quarter within that period.

G. Industry Classification Questionnaire – A Form BE-607, Industry Classification Questionnaire, which is included in this mailing, must be filed by an affiliate for which a prelabeled Form BE-15 has not been provided. If a prelabeled Form BE-15 has been provided for the affiliate, then no Form BE-607 must be filed unless the affiliate's industry classification has changed, i.e., unless the industry classification code of the affiliate, as indicated following the "IND" on the bottom of the label, does not accurately reflect the current industry classification of the affiliate.

See Form BE-607 for a list of industry classifications for a detailed explanation of each classification, see "Industry Classifications and Export and Import Trade Classifications Booklet," BE-799, which was previously furnished to you or which, for new affiliates, is included as part of this mailing.

H. Special instructions for U.S. affiliates that are insurance companies – When there is a difference, the Financial Schedules in Part II of this form are to be prepared on the same basis as an annual report to the stockholders, rather than on the basis of an annual statement to an insurance department. Valuation should be according to normal commercial accounting procedures, not at the rates promulgated by the National Association of Insurance Commissioners. Include assets not acceptable for the annual statement to an insurance department.

Item

18 **Trade accounts and notes receivable** – Include current items such as agents' balances or uncollected premiums, amounts recoverable from reinsurers, and other current notes and accounts receivable (net of allowances for doubtful items) arising from the ordinary course of business.

29 **Trade accounts and notes payable** – Include current items such as loss liabilities, policy claims, commissions due, and other current liabilities arising from the ordinary course of business. Policy reserves are to be included in "Other noncurrent liabilities," item 32, unless they are clearly current liabilities.

39 **Net sales or gross operating revenues, excluding sales taxes** – Include items such as earned premiums, and annuity considerations, gross investment income, and items of a similar nature. Exclude income from unconsolidated affiliates that is to be reported in item 42.

40 **Costs and expenses relating to operations** – Include costs relating to net sales or gross operating revenues, item 39, such as policy losses incurred, death benefits, matured endowments, other policy benefits, increases in liabilities for future policy benefits, other underwriting expenses, and investment expenses.

III. ACCOUNTING METHODS AND REPORTING PROCEDURES

A. Accounting methods and records – Generally accepted U.S. accounting principles should be followed. Corporations should generally use the same methods and records that are used to generate reports to stockholders except where the instructions indicate a variance.

B. Annual stockholder's report – Business enterprises issuing annual reports to stockholders are requested to furnish a copy of their annual reports to this Bureau.

C. Estimates – If actual figures are not available, estimates should be supplied and labeled as such. When a data item cannot be fully subdivided as required, a total and an estimated breakdown of the total should be supplied.

D. Space on form insufficient – When space on a form is insufficient to permit a full answer to any item, the required information should be submitted on supplementary sheets, appropriately labeled and referenced to the item number and the form.

INSTRUCTIONS FOR BE-15 (Continued)

IV. FILING REPORT

A. **Due date** – Form BE-15 is an annual report and shall be due no later than August 31, 1980.

B. **Extension** – Requests for an extension of the reporting deadline will not normally be granted. However, in a hardship case, a written request for an extension will be considered provided it is received at least 15 days prior to the due date of the report and enumerates substantive reasons necessitating the extension. BEA will provide a written response to such requests.

C. **Assistance** – If there are any questions concerning the report, telephone (202) 523–0547 for assistance.

D. **Number of copies** – A single original copy of each form or supplement shall be filed with the Bureau of Economic Analysis. For Form BE-15, this should be the copy with the address label if such a labeled copy has been provided. In addition, each U.S. affiliate must retain a copy of its report to facilitate resolution of any problems which may arise covering the data reported. (Both copies are protected by law; see statement on confidentiality in the Introduction.) File copies should be retained for 3 years after the date on which an annual report is due.

E. **Where to send report** – Return the report to U.S. Department of Commerce, Bureau of Economic Analysis, BE-50(IN), Washington, D.C. 20230.

V. INSTRUCTIONS FOR SPECIFIC PARTS OF THE REPORT FORM

A. Employment and Employee Compensation (Part II, Section E)

Employment and employee compensation data should be based on payroll records for the reporting period. They should relate, therefore, to activities during the reporting period regardless of whether the costs of such activities were charged as an expense on the income statement, charged to inventories, or capitalized. Do not include data related to activities taking place in periods prior to the reporting period, such as those whose costs were charged to inventories or capitalized in prior years.

NOTE: CERTAIN ITEMS TO BE COMPLETED ONLY BY AFFILIATES CLASSIFIED IN MANUFACTURING – The data cells in columns 2 and 3 for items 67, 68, and 70 are to be completed only by U.S. affiliates classified in manufacturing (i.e., in BEA industry codes 201 through 390). Items 64, 69, 70, and 71, column 1 must be completed for all affiliates. For those affiliates for which a pre-labeled BE-15 form is provided, the industry code is as appears at the bottom of the label following "IND=." For all other affiliates, the industry code may be determined by references to Form BE-607 (see Instructions II.G.). If, in the Form BE-607 completed in a given U.S. affiliate, a larger percentage of the affiliate's total sales is classified in manufacturing than in any other major industry group – mining, wholesale trade, services, etc. – then the affiliate's industry code is in manufacturing. If the information for production/non-production workers is not contained in the report as filed but it is subsequently determined that the affiliate is in manufacturing, you will be required to furnish the data retroactively. If you are unsure as to an affiliate's correct industry classification, call (202) 523–0547 for guidance.

Production and related workers for manufacturing are those employees, up to and including working foremen, but excluding other supervisory employees, who are involved in the physical production of goods, handling and storage of goods, related services (e.g., maintenance and repair), and auxiliary production for plant's own use (e.g., power plant). For affiliates classified in manufacturing which also have activities in industries outside manufacturing, consider as production workers only those employees, as defined, who are associated with manufacturing activities; all employees associated with non-manufacturing activities should be considered as non-production workers.

1. Employment is the average number of employees for the reporting period, including part-time employees but excluding home workers and independent sales personnel who are not employees. If possible, the average should be the average for the year of the number of persons on the payroll at the end of each payroll period, month, or quarter. If precise figures are not available, give your best estimate of the average number of employees for the annual reporting period. Employment at the end of the reporting period may be used as an estimate of average employment only if employment throughout the reporting period did not vary significantly due to seasonal operations, a strike, temporary shutdowns, etc. This definition of employment applies both to total employment and to its subdivisions, which are given below.

2. Employee compensation consists of wages and salaries of employees and employer expenditures for all employee benefit plans.

   a. Wages and salaries are the gross earnings of all employees before deduction of employees' payroll withholding tax, social insurance contributions, group insurance premiums, union dues, etc. Include basic time and piece-rate payments, cost of living adjustments, overtime pay and shift differentials, regularly paid bonuses, premiums, personal allowances, summer and yearend bonuses, profit-sharing allocations, and commissions. Exclude commissions paid to independent sales personnel and piece-rate payments made to home workers who are not employees. For incorporated business enterprises, include salaries of officers; for unincorporated business enterprises, exclude payments to proprietors or partners.

   Also include in wages and salaries any other direct payments by employers to employees, such as those for holiday and vacation pay, paid sick leave, severance (redundancy) pay, etc.

   If the employer contributes to benefit funds and also makes direct payments to employees, include the direct payments in "wages and salaries." However, exclude direct payments if the employer pays employees as an agent of benefit funds and is reimbursed for the payments by the funds. Exclude all payments made by benefit funds rather than by the employer. (Employer contributions to benefit funds are included in "employee benefit plans" as discussed below.)

   Also include wages and salaries paid in-kind, valued at the cost to the employer. Pay in-kind should include the actual cost to the employer of those goods and services furnished to employees free or at a significant discount which are clearly and primarily of benefit to employees as consumers, such as food, fuel, and housing. For goods sold to the employee below cost, include the difference between the cost of the goods to the employer and the prices paid by the employee. Housing costs should include depreciation of buildings and equipment, interest, taxes, insurance, repairs and maintenance, and other costs, less grants-in-aid or tax rebates received from public authorities and rent charged to workers. Allowances paid to employees in lieu of pay in-kind should also be included. Do not include expenditures that benefit employers as well as employees, such as for plant facilities, employee training programs, and reimbursements for business expenses.

   b. Employee benefit plans are employer expenditures for all employee benefit plans, including those required by government statute, those resulting from a collective-bargaining contract, or those that are voluntary. Employee benefit plans include retirement plans, life and disability insurance, guaranteed sick pay programs, workers' compensation insurance, medical insurance, family allowances, unemployment insurance, severance (redundancy) pay funds, etc. If plans are financed jointly by the employer and the employee, only the contributions of the employer should be included.

3. Hours worked by production and related workers – Report total number of hours worked during the reporting period by production and related workers included in item 67, column 2. Include stand-by or reporting time; exclude hours paid for holidays, vacations, sick leave, or other paid leave.

USCOMM-DC 59727-P80

INSTRUCTIONS FOR BE-15 (Continued)

V. INSTRUCTIONS FOR SPECIFIC PARTS OF THE REPORT FORM (Continued)

B. U.S. Exports and Imports (Part II, Section G)

The section of the report form on U.S. export and import trade between U.S. affiliates and foreigners attempts to obtain data on a "shipped" basis, i.e., on the basis of when, where, and to (or by) whom the goods were shipped. This is the basis used in compiling official U.S. trade statistics to which the data will be compared.

A. **Definition of U.S. exports and imports** – U.S. exports and imports refer to physical movements of goods, to include capital goods to be used in the business, between the customs area of the United States and the customs area of a foreign country. For purposes of this report, consigned goods that are shipped during the period must be included in the trade figures even though not normally recorded as sales or purchases, or entered into intercompany accounts when initially consigned.

B. **Timing** – Only goods actually shipped between the United States and a foreign country in calendar year 1979 should be included, regardless of when the goods were charged or consigned. For example, goods shipped by the U.S. affiliate to a foreign parent in 1979 that were charged or consigned to the foreign parent in 1980 should be included, but goods shipped to a foreigner in 1978 that were charged or consigned to the foreigner in 1979 should be excluded.

(Note: Goods shipped by an independent carrier or a freight forwarder at the expense of an entity are shipments by that entity.)

C. **Valuation of exports** – U.S. exports should be valued f.a.s. at the U.S. port of exportation. This includes all costs incurred up to the point of loading the goods aboard the export carrier at the U.S. port of exportation, including the selling price at the interior point of shipment (or cost if not sold), packaging costs, and inland freight and insurance. It excludes all subsequent costs, such as loading costs, foreign import duties, and freight and insurance from the U.S. port of exportation to the foreign port of entry.

D. **Valuation of imports** – U.S. imports should be valued at the actual contract price agreed upon between buyer and seller, adjusted to an f.a.s. foreign-port-of-exportation basis. This includes all costs incurred up to the point of loading the goods aboard the export carrier at the foreign port of exportation, including the selling price at the interior point of shipment (or cost if not sold), packaging costs, and inland freight and insurance. It excludes all subsequent costs, such as loading costs, U.S. import duties, and freight and insurance from the foreign port of exportation to the U.S. port of entry.

DO NOT RETURN INSTRUCTION PAGES WITH THE FORM

O.M.B. No. 41-S74085. Approval Expires April 26, 1976

FORM BE-12
(12-16-74)

U.S. DEPARTMENT OF COMMERCE
SOCIAL AND ECONOMIC STATISTICS ADMINISTRATION
BUREAU OF ECONOMIC ANALYSIS

CONFIDENTIAL

SURVEY OF FOREIGN DIRECT INVESTMENT IN THE UNITED STATES 1974

RETURN TO
Bureau of Economic Analysis
ATTN: International Investment Division – BE-50(LM)
U.S. Department of Commerce
Washington, D.C. 20230

NOTICE – The filing of this report is MANDATORY pursuant to Public Law 93–479. The information reported on this form will be used exclusively for statistical purposes. It will be held in strictest confidence by this Department and published only in such aggregates which preclude the disclosure of data supplied by individual Reporters.

Control number

Part I - IDENTIFICATION OF REPORTER

1. Name and address of Reporter (Enter name and mailing address in blocks below. Skip a single block between words.)

10001 [01] ◀ COMMERCE USE ONLY

Name of Reporter
002 [01]

Street or P.O. box
003 [01]

City and State ▶ ZIP code
004 [01]

2. Code and name of U.S. State or territory of principal office of Reporter *(See list of codes, PART IV, page 11)*

005 State code [01] Name of State

3. Code and name of U.S. State or territory of incorporation or organization of Reporter *(See list of codes, PART IV, page 11)*

006 State code [01] Name of State

4. Enter all Employer Identification Number(s) used to file income and payroll taxes.

007 [01] – 008 [01] –

5. Year Reporter or the original U.S. business enterprise was first established

009 [01] ← Year

6. Year ten percent or more equity or beneficial ownership was acquired by the foreign parent

010 [01] ← Year

7. Form of organization of Reporter *(Mark "X" one)*

011 [01]
[1] Partnership
[2] Sole proprietorship
[3] Branch
[4] Corporation
[5] Other – *Specify*

8. Coverage of form *(See general instructions, page 4, for rules.* If there are any questions regarding consolidation of more than one U.S. business enterprise in this report, consult this Bureau before completing form.)

012 [01] { If this report is for a single U.S. business enterprise enter "1" in the box. If there is more than one U.S. business enterprise consolidated in this report (hereinafter considered one) enter the number of U.S. business enterprises in the box.

9. Names and addresses of all business enterprises consolidated (as indicated in item 8)

10. Number of PART II schedules required to be filed by Reporter *(See rules covering filing of multiple PART II schedules, page 5, of general instructions)*

013 [01] ← Number

11. Ownership – Percent of voting stock, for an unincorporated Reporter or an equivalent interest for an unincorporated Reporter, owned directly by – NOTE – *Enter percent of ownership to tenth of one percent*		REPORTING PERIOD Ending (a)	Beginning (b)
a. All foreign parents for which PART II schedules are filed to report direct ownership lines	014	[01]	[02]
b. All U.S. parents (U.S. affiliates of the same foreign person) for which PART II schedules are filed to report direct ownership lines	015	[01]	[02]
c. Other U.S. persons	016	[01]	[02]
d. Other foreign persons	017	[01]	[02]
e. TOTAL ⟶		100 .0	100

12. Reporting period		Year (Last 2 digits)	Month	Day
a. The terms "Opening balance" or "Beginning of reporting period" in this report always refer to data as of ⟶	018	[01]		
b. The terms "Closing balance" or "End of reporting period" in this report always refer to data as of ⟶	019	[01]		

IMPORTANT—Please read all instructions carefully

1. DUE DATE

A completed report on Form BE-12 shall be filed by April 30, 1975 or no later than 60 days after publication of the reporting requirements in the Federal Register, whichever is later.

2. FILING

A completed Form BE-12 is required for each U.S. business enterprise which was controlled by a foreign person during any part of the year ending December 31, 1974. For purposes of this survey, foreign control is defined as the direct, indirect, or a combination of direct and indirect ownership, of ten percent or more of the voting stock of an incorporated U.S. business enterprise, or the equivalent interest in an unincorporated U.S. business enterprise. A separate PART II, Investment and Transactions Between Reporter and Parent, is required from a single Reporter to report the following:

a. Each direct line of ownership in the Reporter which was held by a foreign parent(s)

b. Each direct line of ownership in the Reporter held by a U.S. parent which was a U.S. affiliate of the same foreign person

See rules governing filing of multiple PART II schedules, page 5, of the general instructions.)

3. EXEMPTIONS

If total assets as of December 31, 1974 and total revenues for 1974 were each less than $100,000.00, only PART I of BE-12 is required with a notation in item 20 that both total assets and total revenues were each less than $100,000.00. (See general instructions, page 3.)

4. GENERAL NOTES

a. Currency amounts should be reported in U.S. dollars and should be rounded to the nearest thousand.

b. If an item is between ± $500.00 enter "0."

c. Use parentheses to indicate negative numbers.

d. Every question on the form should be answered except where reporting is specifically exempt. If certain information cannot be supplied, give best estimate.

5. All questions should be answered in the context of the reporting period given in items 12a and 12b, unless another time period is specified in the instructions.

PERSON TO CONSULT CONCERNING QUESTIONS ABOUT THIS REPORT

Name and address (Print)

Is report being completed by an intermediary of a foreign beneficial owner? YES NO

TELEPHONE: Area code | Number | Extension

CERTIFICATION The undersigned Reporter, and the official executing this certification on its behalf, hereby certify that the information contained in this report, including any BE-12 PART II (Additional) schedules, is correct and complete to the best of their knowledge and belief.

Name of Reporter	Authorized official's signature	Title	Date

The U.S. Code, Title 18 (Crimes and Criminal Procedure), Section 1001, makes it a criminal offense to willfully make a false statement or representation to any department or agency of the United States as to any matter within its jurisdiction. Persons who have access to individual company information are subject to penalties for unauthorized disclosure.

Part I - IDENTIFICATION OF REPORTER—Continued

13. Percent of Reporter's net sales (same as Item 123, PART IV) accounted for by each classification. Account for all classifications which comprise five percent or more of net sales; account for no less than seventy-five percent of net sales. (Holding companies should use total income.) See the "Industry Classifications" portion of the INDUSTRY CLASSIFICATIONS AND EXPORT AND IMPORT TRADE CLASSIFICATIONS BOOKLET for a full description of each industry.

Code (a)	Percent of sales (b)	Industry (c)
10020		**AGRICULTURE, FORESTRY, AND FISHING**
010		Agricultural production — crops
020		Agricultural production — livestock, except beef cattle feedlots
021		Agricultural production — beef cattle feedlots
070		Agricultural services
080		Forestry
090		Fishing, hunting, and trapping
		MINING
101		Iron
102		Copper, lead, zinc, gold and silver
103		Bauxite and other aluminum ores
109		Other metallic ores and metal mining services
110		Coal and other nonmetallic minerals, except oil and gas
131		Crude petroleum extraction (no refining) and natural gas
138		Oil and gas field services
		CONSTRUCTION
150		Construction
		MANUFACTURING
201		Meat products
202		Dairy products
203		Canned and preserved fruits and vegetables
204		Grain mill products
205		Bakery products
208		Beverages
209		Other food and kindred products
210		Tobacco manufactures
220		Textile mill products
230		Apparel and other finished products made from fabrics and similar materials
240		Lumber and wood products, except furniture
250		Furniture and fixtures
262		Pulp, paper and board mills
264		Miscellaneous converted paper products
265		Paperboard containers and boxes
270		Printing, publishing, and allied industries
281		Industrial chemicals, plastics materials, and synthetics
283		Drugs
284		Soap, cleaners, and toilet goods
285		Paints and allied products
287		Agricultural chemicals
289		Chemical products, n.e.c.

Code (a)	Percent of sales (b)	Industry (c)
		MANUFACTURING — Continued
291		Integrated petroleum refining and extraction
292		Petroleum refining without extraction
299		Petroleum and coal products, n.e.c.
301		Rubber products
307		Miscellaneous plastics products
310		Leather and leather products
321		Glass products
329		Stone, clay, cement, and concrete products
331		Primary metal products, ferrous
335		Primary metal products, non-ferrous
341		Metal cans and shipping containers
342		Cutlery, hand tools and hardware
343		Metal plumbing fixtures and heating equipment, except electric and warm air
344		Fabricated structural metal products
345		Screw machine products, bolts, nuts, screws, rivets, and washers
346		Metal stampings and forgings
349		Fabricated metal products, n.e.c., ordnance, and coating, engraving, and allied services
351		Engines and turbines
352		Farm and garden machinery and equipment
353		Construction, mining, and materials handling machinery and equipment
354		Metalworking machinery and equipment
355		Special industry machinery
356		General industrial machinery and equipment
357		Office, computing, and accounting machines
358		Refrigeration and service industry machinery
359		Machinery, except electrical, n.e.c.
363		Household electrical appliances
364		Electrical lighting and wiring equipment
366		Radio, television, and communication equipment
367		Electronic components and accessories
369		Electrical machinery, n.e.c.
371		Motor vehicles and equipment
379		Other transportation equipment, n.e.c.
381		Scientific instruments and measuring and controlling devices
383		Optical and ophthalmic goods
384		Surgical, medical, and dental instruments and supplies
386		Photographic equipment and supplies
387		Watches, clocks, and watchcases
390		Miscellaneous manufactured products, n.e.c.

Code (a)	Percent of sales (b)	Industry (c)
		TRANSPORTATION, COMMUNICATION, ELECTRIC, GAS, AND SANITARY SERVICES
441		Petroleum tanker operations
449		Other water transportation
450		Transportation by air
461		Pipeline transportation, including natural gas transmission
479		Transportation, n.e.c.
480		Communication
490		Electric, gas, and sanitary services
		WHOLESALE TRADE
501		Motor vehicles and automotive parts and supplies
503		Lumber and other construction materials
504		Metals and minerals, except petroleum
505		Electrical goods
506		Hardware, plumbing and heating equipment and supplies
507		Machinery, equipment and supplies, except farm and garden
508		Farm and garden machinery, equipment and supplies
509		Miscellaneous durable goods, n.e.c.
511		Paper and paper products
512		Drugs, proprietaries, and sundries
513		Apparel, piece goods, and notions
514		Groceries and related products
515		Farm-product raw materials
517		Petroleum and petroleum products
519		Miscellaneous non-durable goods, n.e.c.
		RETAIL TRADE
520		Retail trade, except food stores and eating and drinking places
540		Food stores and eating and drinking places
		FINANCE, INSURANCE, AND REAL ESTATE
600		Banking
610		Credit agencies other than banks
620		Security, commodity brokers, and services, and investment companies
630		Insurance carriers, agents, brokers, and services
650		Real estate
660		Combinations of real estate, insurance, loans, and law offices
671		Holding companies
		SERVICES
700		Hotels, rooming houses, camps, and other lodging places
731		Advertising
760		Motion pictures, including television tape and film
891		Engineering, architectural, and surveying services
893		Accounting, auditing and bookkeeping services
899		Other personal and business services, n.e.c.

FORM BE-12 (12-16-78)

Part I - IDENTIFICATION OF REPORTER—Continued

14. Activity and product or service of Reporter

a. Major activity of this Reporter *(Mark "X" one)*

- [ ] Extracting of oil or minerals (including exploration and development)
- [ ] Manufacturing (fabricating, assembling, processing)
- [ ] Selling or distributing goods
- [ ] Providing a service
- [ ] Investing in real estate
- [ ] Other – *Specify*

b. Major product or service involved in this activity

15. Number of establishments this business enterprise operates

10021 [01]

(An establishment is an economic unit at a single physical location where business is conducted or services or industrial operations are performed. Where distinct and separate economic activities are performed at a single location, each should be considered as a separate establishment if employment in such activity is significant and establishment data, such as number of employees, their wages and salaries, and receipts, are available.)

16. Identification of business enterprises in which Reporter held a voting interest

a. Reporter held a ten percent or more DIRECT interest in one or more foreign business enterprises

022 [01] 1 No

[01] 2 Yes

b. Reporter held a DIRECT voting ownership interest in one or more U.S. business enterprises in which a ten percent or more ownership interest is held, directly and/or indirectly, by this Reporter's foreign parent(s)

023 [01] 1 No

[01] 2 Yes – *Give name, address, and percent of DIRECT ownership in each at end of reporting period*

Name and address	Percent of ownership
1)	%
2)	%
3)	%
4)	%

17. Identification of other U.S. affiliates of foreign parent

a. Name and address of each U.S. business enterprise in which a ten percent or more ownership interest was held, directly and/or indirectly, by this Reporter's foreign parent, and which is not given in item 16b, or for which a separate report is not being filed.

Continue with item 17b, at top of page →

17b. If the DIRECT foreign ownership in Reporter, item 11a, is less than ten percent give the name and address of the U.S. affiliate which is DIRECTLY foreign-owned to the extent of ten percent or more and which, in turn, has a direct or indirect ownership interest in this Reporter.

Name and address

024 [01] ◀ COMMERCE USE ONLY

025 [01]

026 [01]

c. If an entry in 17b, give the country of location of the foreign person DIRECTLY owning ten percent or more of the U.S. affiliate identified in item 17b.

Country of foreign owner

027 [01] ◀ COMMERCE USE ONLY

18. Identification of "other U.S. persons" having an ownership interest of more than fifty percent in this Reporter.

Did a single "other U.S. person," reported in item 11c, hold a more than fifty percent ownership interest in this Reporter any time during the year ending December 31, 1974?

028 [01] 1 [ ] No

[01] 2 [ ] Yes – *Give name, address and percent of ownership for such U.S. person*

Name and address	Percent of ownership
	%

19. Number of directors and principal officers

Enter the number of this Reporter's directors and principal officers. An individual serving in both capacities should be counted once in each category.		Number: Directors (a)	Number: Principal officers (b)
a. TOTAL →	029	[01]	[02]
b. Number who are U.S. citizens	030	[01]	[02]
c. Number who are NOT U.S. citizens	031	[01]	[02]

20. Notation of partial exemption – Were the value of total assets including real property investments, as of December 31, 1974, and total revenues for the year 1974, each less than $100,000.00?

032 [01] 1 [ ] No – *GO to page 4*

[01] 2 [ ] Yes – *Complete a, b, and c below*

Assets and revenues		Thousands of dollars (a)
a. Total assets at end of year 1974	039	[01] $
b. Total revenues during the year 1974	034	[01] $
c. Country of foreign person having a ten percent or more, direct or indirect, ownership interest in this Reporter	035	COMMERCE USE ONLY [01]

You are not required to file the remaining parts of this Form BE-12 if both (a) and (b) above are less than $100,000.00.

COMMERCE USE ONLY

INDN 036 [01]

ENTN 037 [01]

XIFN 038 [01]

Part II—INVESTMENT AND TRANSACTIONS BETWEEN REPORTER AND PARENT

REPORT ALL AMOUNTS IN THOUSANDS OF U.S. DOLLARS

NOTE – All Reporters – A separate PART II must be filed for each line of direct ownership included in item 11a and 11b, PART I. The term "Parent" in PART II of this completed Form BE-12 refers to the one line of direct ownership being reported and identified in PART II, section A. If multiple PART II's are required from this Reporter, the term "Parent" on a given PART II (Additional) refers to the one line of direct ownership being reported and identified in section A of that PART II (Additional). See general instructions, page 5, for requirements on filing multiple PART II's.

NOTE – Banks, Insurance Companies, Securities Dealers, Brokers, etc. – In order to avoid duplication in U.S. Government statistics, do not include in inter-company transactions or accounts between this Reporter and its foreign parent the data on claims and liabilities and purchases or sales of foreign securities which are reportable on Treasury Foreign Exchange Forms B-1, B-2, B-3, S-1, and/or S-4. Permanent investments and related earnings, income, fees, and other items remitted or credited between the Reporter and its foreign parent, or foreign affiliate(s) of the foreign parent, should be reported on the appropriate lines of PART II. Exclude interest and fees relating to the items reportable on the Treasury Foreign Exchange Forms.

Important example	*Dollar figures should be reported as illustrated.* EXAMPLE: If figure is $1,125,628,000.00 →	Billions (000)	Millions (000)	Thousands (000)
		1,	125,	628

Section A IDENTIFICATION OF PARENT HOLDING DIRECT LINE OF OWNERSHIP IN REPORTER

21. Name and address of parent →

COMMERCE USE ONLY →

20039 01

22. Country of location of parent (Mark "X" one)

040 | 01 000 ☐ United States
01 100 ☐ Canada
01 302 ☐ Belgium
01 307 ☐ France
01 308 ☐ Germany
01 314 ☐ Italy
01 319 ☐ Netherlands
01 324 ☐ Sweden
01 325 ☐ Switzerland
01 327 ☐ United Kingdom
01 601 ☐ Australia
01 614 ☐ Japan
01 ☐ Other – Specify

23. Major industry of parent (Mark "X" one)

041 | 01 010 ☐ Agriculture
01 020 ☐ Mining
01 030 ☐ Construction
01 040 ☐ Manufacturing
01 050 ☐ Transportation
01 060 ☐ Communications
01 070 ☐ Electric, gas, and sanitary services
01 080 ☐ Wholesale Trade
01 090 ☐ Retail Trade
01 100 ☐ Holding company
01 110 ☐ Other finance, insurance, and real estate
01 120 ☐ Services
01 130 ☐ Governmental or quasi-governmental
01 140 ☐ Individual
01 150 ☐ Other – Specify

Continue with item 24 above →

24. Parent's percent of direct voting ownership in Reporter (Enter percent of ownership to tenths of one percent) 042

REPORTING PERIOD	Ending (a)	Beginning (b)
	%	%

25. Parent's total assets and revenues – If the actual data cannot be obtained, give best estimates

		Thousands of dollars (a)
a. Total assets at end of year 1974	043	$
b. Total revenues during 1974	044	$

26. If the parent is a member of an affiliated foreign group, is the parent the member which is NOT owned more than fifty percent by any other foreign person? (See definition of affiliated foreign group, page 2, general instructions.)

045 | 01 1 ☐ Yes – GO to item 28 below
01 2 ☐ No – Complete and item 27 below

a. Give name and address (including country) of the member of the affiliated foreign group which is not owned more than fifty percent by any other foreign person.

		Thousands of dollars (a)
b. Total assets of this foreign person at end of 1974	047	$
c. Total revenues of this foreign person during 1974	048	$
d. Industry of foreign person – Refer to industries and codes in item 23 and enter the code best describing industry of foreign person	049	

049 ◄ COMMERCE USE ONLY

27. Is foreign parent, or person identified in item 26, in turn owned by a U.S. person to the extent of ten percent or more of its voting stock if incorporated, or an equivalent interest if unincorporated?

050 | 01 1 ☐ Yes → Give name & address of U.S. owner
01 2 ☐ No

Section B INVESTMENT BETWEEN REPORTER AND PARENT (According to books of Reporter)

		Closing balance (a)	Opening balance (b)
UNINCORPORATED REPORTER			
28. Parent's equity in unincorporated Reporter – Home office account of branch, net proprietorship account, or parent's share of partnership account or the equity account of other unincorporated Reporter	071	$	$
INCORPORATED REPORTER			
• CURRENT ITEMS			
29. Current liabilities owed to parent – Exclude current portion of long-term debt	072	$	$
30. Current portion of long-term debt owed to parent	073		
31. Current claims due Reporter from parent	074		
• LONG-TERM ITEMS			
32. Long-term debt owed to parent, excluding current portion	075		
33. Long-term claims due Reporter from parent	076		
• OWNERS' EQUITY ITEMS			
34. Capital stock of this Reporter owned by parent	077		
35. Parent's equity in additional paid-in-capital of Reporter	078		
36. Parent's equity in retained earnings of Reporter	079		
37. Capital stock of parent owned by Reporter, including any premium paid	080		
38. TOTAL FOR INCORPORATED REPORTER (Sum of items 29, 30, 32, 34, 35, and 36 minus sum of items 31, 33, and 37) →	081	$	$

		Total (a)	Due to exchange rate fluctuations (b)	Due to other reasons (c)
39. Gain (loss) realized by Reporter on settlement of debt – Difference according to books of Reporter, between the change in debt balances minus amount received or paid by Reporter in settlement of the debt items during period, which settlement would be reflected in a change in one or more of items 29 through 33	082	$	$	$
40. Unrealized gain (loss) on outstanding debt – Amount of the difference between the closing and opening balances of items 29 through 33 which represents an unrealized gain (loss) on amounts outstanding at the close of the reporting period	083	$	$	$

FORM BE-12 (12-16-74)

Part II—INVESTMENT AND TRANSACTIONS BETWEEN REPORTER AND PARENT—Continued

REPORT ALL AMOUNTS IN THOUSANDS OF U.S. DOLLARS

Section C — NET INCREASE (DECREASE) IN EQUITY HOLDINGS BETWEEN REPORTER AND PARENT

This section is to identify items causing change in such a way as to be able to discern which items result in capital inflows to (capital outflows from) the United States as defined for balance of payments purposes.

NOTE – Entries should be made in column (c) only when actual market or transactions value of equity instruments sold or acquired by the parent differed from the values recorded on the books of this Reporter. For example, such a difference would occur if the parent sold or acquired stock of the Reporter on the open securities market. Entries should reflect the actual market or transactions value, with the gain or loss necessary to reconcile to book value specified in Item 55—Other.

		COMMERCE USE ONLY	Means of settlement codes (Listed below Item 59) (a)	Increase (decrease) according to books of Reporter (b)	Increase (decrease) according to books of parent (c)
• NET INCREASE (DECREASE) IN PARENT'S EQUITY HOLDINGS IN REPORTER (exclude share in retained earnings)					
41. Unincorporated Reporter – Enter amount for Item 28, column (a) minus column (b). Incorporated Reporter – Enter amount for Item 34 plus Item 35, column (a) minus column (b). Equals sum of Items 42, 43, 45 through 49, 54, and 55 minus sum of Items 44 and 50 through 53, column (b).	20064			03 $	
Transactions between Reporter and parent					
42. Establishment (total liquidation) of Reporter by parent	065		02	03	
43. Sale of equity interest in Reporter by the Reporter to parent	066		02	03	
44. Purchase of equity interest in Reporter by the Reporter from parent	067		02	03	
45. Capital contributions by parent to Reporter not resulting in issuance of capital stock	068		02	03	
Transactions between parent and others					
46. Acquisition of an equity interest in Reporter by parent – From other members of the affiliated foreign group of which this parent is a member or is a U.S. affiliate – *Specify country*	Country 069	01	02	03	04 $
	070	01	02	03	04
	071	01	02	03	04
47. From all other foreign persons – *Specify country*	072	01	02	03	04
48. From U.S. affiliates of this affiliated foreign group of which this parent is a member or U.S. affiliate	073		02	03	04
49. From all other U.S. persons	074		02	03	04
50. Sale of an equity interest in Reporter by parent – To other members of the affiliated foreign group of which this parent is a member or U.S. affiliate – *Specify country of foreign member*	Country 075	01	02	03	04
	076	01	02	03	04
	077	01	02	03	04
51. To all other foreign persons – *Specify country of foreign person*	078	01	02	03	04
52. To U.S. affiliates of the affiliated foreign group of which this parent is a member or U.S. affiliate	079		02	03	04
53. To all other U.S. persons	080		02	03 $	04 $
Other changes					
54. Writeup (writedown)	081			03	
55. Other, including exchange rate changes during the year – *Specify*	082			03 $	
• NET INCREASE (DECREASE) IN REPORTER'S EQUITY HOLDINGS IN PARENT					
56. Enter amount for Item 37, column (a) minus column (b) equals sum of items 57 through 59	083			03 $	
57. Net increase (decrease) resulting from transactions with all foreigners, at market or transactions value – *Specify country*	Country 084	01	02	03	
	085	01	02	03	
58. Net increase (decrease) resulting from transactions with all U.S. persons, at market or transactions value	086		02	03	
59. Other, including gain or loss necessary to reconcile market or transactions value to book value – *Specify*	087		02	03 $	
COMMERCE USE ONLY ▶	088			03	

MEANS OF SETTLEMENT CODES

1 – Cash transferred from abroad by foreign parent
2 – Cash raised in the United States by foreign parent
3 – Other cash, exclusive of codes 1 and 2
4 – Exchange of stock or other equity for stock
5 – Capitalization of intercompany accounts
6 – Exchange of stock or other equity for financial assets other than cash, but excluding transactions covered in codes 4 and 5
7 – Transfer of equipment, inventory, or other tangible property
8 – Transfer of intangible assets; for example, patents, know-how, rights
9 – Other – *Specify*

Section D — SCHEDULE OF RECEIPTS AND PAYMENTS OF DIVIDENDS, INTEREST, FEES, ROYALTIES, AND RENTALS

Enter the amount the Reporter received from, paid to, or entered into intercompany account with the parent. Include amounts for which payments were made in kind.

		Payments by Reporter to parent: Net of tax withheld (a)	Payments by Reporter to parent: Tax withheld (b)	Receipts by Reporter from parent: Net of tax withheld (c)	Receipts by Reporter from parent: Tax withheld (d)
60. Dividends, on common and preferred stock, paid out of current and past earnings, excluding stock dividends	089	01 $	02 $	03 $	04 $
61. Interest	090	01	02	03	04
62. Royalties, license fees, and other fees for the use or sale of intangible property	091	01	02	03	04
63. Fees for services rendered, including management services, professional or technical services, allocated expenses, etc.	092	01	02	03	04
64. Rentals for the use of tangible property (except film or television tape)	093	01	02	03	04
65. Film or television tape rentals	094	01	02	03	04
66. TOTAL (*Sum of Items 60 through 65*) ▶	095	01 $	02 $	03 $	04 $

Section E — PARENT'S EQUITY IN REPORTER'S NET INCOME

		Amount for year
67. Parent's equity in Reporter's net income after provision for U.S. Federal, State, and local income taxes – Enter parent's portion of net income before depletion charges, except those representing the amortization of the actual cost of capital assets, and before provision for common and preferred dividends.	096	01 $

FORM BE-12 (12-14-74)

FORM BE-12 (12-16-74)

Part III—DIRECT FINANCIAL TRANSACTIONS BETWEEN THE REPORTER AND ALL FOREIGN AFFILIATES OF ALL FOREIGN PARENTS WHICH DO NOT HAVE A DIRECT LINE OF OWNERSHIP IN THE REPORTER – *REPORT ALL AMOUNTS IN THOUSANDS OF U.S. DOLLARS*

NOTE – DO NOT include any direct financial transactions with foreign parents where a direct line of ownership in the Reporter was reported in PART II, or in a PART II (Additional), filed by this same Reporter. Such direct financial transactions should be reported in the PART II schedules. *(See general instructions, page 5, for rules governing the filing of multiple PART II schedules.)*

Country	COMMERCE USE ONLY	Interest net of tax withheld at source (a)	Royalties, license fees, and other fees for use, sale, or purchase, of intangible property (net of tax withheld at the source) (b)	Rentals for use of tangible property and management and service fees (net of tax withheld at the source) (c)	LIABILITIES AND RECEIVABLES OF THE REPORTER — Closing balance: Short term (original maturity of less than 1 year) (d)	Closing balance: Current portion of long term (e)	Closing balance: Other long term (f)	Opening balance: Short term (original maturity of less than 1 year) (g)	Opening balance: Current portion of long-term (h)	Opening balance: Other long-term (i)
Current liabilities and long term debt of Reporter owed, and interest, fees, rents, and royalties paid by Reporter to foreign affiliates of foreign parents										
	01	02	03	04	05	06	07	08	09	10
68. Canada 30097	100	$	$	$	$	$	$	$	$	$
69. United Kingdom 098	01 327	02	03	04	05	06	07	08	09	10
70. Japan 099	01 614	02	03	04	05	06	07	08	09	10
Other – *Specify*										
71. 100	01	02	03	04	05	06	07	08	09	10
72. 101	01	02	03	04	05	06	07	08	09	10
73. 102	01	02	03	04	05	06	07	08	09	10
74. 103	01	02	03	04	05	06	07	08	09	10
75. 104	01	02	03	04	05	06	07	08	09	10
76. 105	01	02	03	04	05	06	07	08	09	10
77. 106	01	02	03	04	05	06	07	08	09	10
78. 107	01	02	03	04	05	06	07	08	09	10
79. 108	01	02	03	04	05	06	07	08	09	10
80. TOTAL *(Sum of items 68 – 79)* → 109	01	02 $	03 $	04 $	05 $	06 $	07 $	08 $	09 $	10 $
Current and long-term receivables due Reporter, and interest, fees, rents, and royalties received by Reporter from foreign affiliates of foreign parents										
81. Canada 110	01 170	02 $	03 $	04 $	05 $		07 $	08 $		10 $
82. United Kingdom 111	01 227	02	03	04	05		07	08		10
83. Japan 112	01 614	02	03	04	05		07	08		10
Other – *Specify*										
84. 113	01	02	03	04	05		07	08		10
85. 114	01	02	03	04	05		07	08		10
86. 115	01	02	03	04	05		07	08		10
87. 116	01	02	03	04	05		07	08		10
88. 117	01	02	03	04	05		07	08		10
89. 118	01	02	03	04	05		07	08		10
90. 119	01	02	03	04	05		07	08		10
91. 120	01	02	03	04	05		07	08		10
92. 121	01	02	03	04	05		07	08		10
93. TOTAL *(Sum of items 81–92)* → 122	01	02 $	03 $	04 $	05 $		07 $	08 $		10 $

Part IV - FINANCIAL SCHEDULES – *(Insurance companies, banks, or airline stations, see supplemental instructions, page 9, before continuing)*
REPORT ALL AMOUNTS IN THOUSANDS OF U.S. DOLLARS

Section A BALANCE SHEET

		Closing balance (a)	Opening balance (b)
• ASSETS			
94. Cash items – Cash, deposits in financial institutions, and other cash items	40123	01 $	02 $
95. Trade accounts and notes receivable, net of allowances for doubtful items	124	01	02
96. Other current receivables, net of allowances for doubtful items	125	01	02
97. Inventories, excluding land held for resale	126	01	02
98. Land held for resale	127	01	02
99. Other current assets – Current assets not included above	128	01	02
100. Property, plant and equipment, net – Land, timber, mineral rights, structures, machinery, and equipment, owned by this Reporter, including those leased to others by this Reporter, at historical cost net of accumulated depreciation, depletion, amortization, and like charges. Include special tools, construction in progress, and capitalized exploration and development costs. Exclude intangible assets and land held for resale.	129	01	02
101. Equity investment in U.S. affiliates for which this Reporter is indicated as a parent in item 17b, PART I – Equity investment, including equity in undistributed earnings since acquisition, of this Reporter in all other reported U.S. affiliates of the foreign parent(s) of Reporter	130	01	02
102. Equity investment in foreign affiliates of Reporter – Equity investment, including equity in undistributed earnings since acquisition, in those foreign business enterprises in which the Reporter owned, directly or indirectly, ten percent or more of the voting stock for an incorporated enterprise or an equivalent interest in an unincorporated enterprise	131	01	02
103. Other noncurrent assets – Intangible assets, net of amortization, investments in and long-term advance to parent(s) of this Reporter, other stocks and bonds, and other noncurrent assets not shown above	132	01	02
Amount of long-term receivables included in item 103 which is denominated in foreign currencies →	133	01 Closing $	02 Opening $
104. TOTAL ASSETS *(Sum of items 94 through 103. For an unincorporated Reporter must equal sum of items 110 and 111. For an incorporated Reporter must equal sum of items 110 and 115.)* →	134	01 $	02 $
• LIABILITIES			
105. Trade accounts and notes payable	135	01 $	02 $
106. Current portion of long-term debt	136	01	02
107. Other current liabilities – Other current liabilities having an original maturity of one year or less	137	01	02
108. Long-term debt (excluding current portion) – Debt having original maturity of more than one year, excluding current portion due	138	01	02
Amount of item 108 which is denominated in foreign currencies →	139	01 Closing $	02 Opening $
109. Other liabilities – All liabilities which cannot be classified according to original maturity or due date. Also include any underlying minority interest which arises out of the consolidation of more than one U.S. affiliate of parent. (However, the equity of a direct minority ownership interest in this Reporter is not to be separated from the normal equity accounts.)	140	01	02
110. TOTAL LIABILITIES *(Sum of items 105, 106, 107, 108, and 109)* →	141	01 $	02 $
• OWNERS' EQUITY			
UNINCORPORATED REPORTER			
111. Total owners' equity in unincorporated Reporter – Home office account of branch, net proprietorship account, partnership account, or equity account of other unincorporated Reporter, equals item 104 minus item 110	142	01 $	02 $
INCORPORATED REPORTER			
112. Capital stock – Common and preferred stock issued and outstanding	143	01	02
113. Additional paid-in-capital – All invested or contributed capital in addition to or in excess of capital stock	144	01	02
114. Retained earnings – Earnings retained by the corporation and legally available for declaration of dividends, include those which have been voluntarily restricted.	145	01	02
115. TOTAL OWNERS' EQUITY FOR INCORPORATED REPORTER *(Sum of items 112 through 114, must equal item 104 minus item 110)* →	146	01 $	02 $

Section B PROPERTY, PLANT AND EQUIPMENT

116. Gross cost of property – Land, timber, and mineral rights owned by this Reporter, including those leased to others, at historical cost. Exclude intangible assets, land held for resale, and capitalized exploration and development costs.	147	01 $	02 $
117. Accumulated depletion, etc. of property – Accumulated depletion and like charges against the gross cost of the property included in item 116	148	01	02
118. Gross cost of plant and equipment – Plant and equipment owned by this Reporter, including those leased to others, at historical cost. Include all structures, machinery, and equipment, including special tools, construction in progress, and capitalized exploration and development costs. Exclude intangible assets.	149	01	02
119. Accumulated depreciation, depletion, etc., of plant and equipment – Accumulated depreciation, depletion, and like charges against the gross cost of the plant and equipment included in item 118	150	01	02
120. Property, plant and equipment, net (Sum of items 116 and 118 minus sum of items 117 and 119, must equal item 100)	151	01 $	02 $

Section C INCOME STATEMENT

		Amount for year (a)
• INCOME		
121. Net sales or gross operating revenues – Net sales (sales minus returns, allowances, and discounts) or gross operating revenues, both inclusive of sales or consumption taxes levied directly on the consumer and excise taxes levied on manufacturers, wholesalers, and retailers	152	01 $
122. Sales taxes – Amount, included in item 121, which represents sales or consumption taxes levied directly on the consumer and excise taxes levied directly on manufacturers, wholesalers, and retailers	153	01
123. Net sales or gross operating revenues, excluding sales taxes – Item 121 minus item 122	154	01
124. Reporter's equity in net income – After income taxes of U.S. affiliates for which this Reporter is indicated as the parent, and for which the equity investment was reported in item 101	155	01
125. Reporter's equity in net income – After foreign income taxes, of foreign business enterprises in which Reporter owned, directly or indirectly, ten percent or more of the voting stock for an incorporated enterprise or equivalent interest in an unincorporated enterprise, and equity investment in such affiliates was reported in item 102	156	01
126. Other income – Gains on sales of property, plant and equipment items; realized and unrealized gains resulting from changes in exchange rates; other extraordinary gains; non-operating income; and other income not included above – *Specify*	157	01
127. TOTAL INCOME *(Sum of items 123 through 126)* →	158	01 $

Section C INCOME STATEMENT – Continued

		Amount for year (a)
• COSTS AND EXPENSES		
128. Cost of goods sold – Operating expenditures which relate to net sales or gross operating revenues, excluding sales taxes (item 123), including production royalty expenses to Federal, State and local governments, their subdivisions and agencies, including depletion charges representing the amortization of actual cost of capital assets, but excluding all other depletion charges	159	01 $
129. Selling, general and administrative expenses	160	01
130. Provision for U.S. Federal, State, and local income taxes	161	01
131. Other costs and expenses – Realized and unrealized losses resulting from changes in exchange rates; losses on retirement or sale of property, plant and equipment items; other extraordinary losses; non-operating expenses; underlying minority interest in profits which arise out of consolidating more than one U.S. affiliate of parent on this form (however, the equity of a direct minority interest in this Reporter is not to be separated from normal income accounts); and other costs and expenses not shown above – *Specify*	162	01
132. TOTAL COSTS AND EXPENSES *(Sum of items 128 through 131)* →	163	01 $
• NET INCOME		
133. Net income after provision for U.S. Federal, State, and local income taxes, but before dividends on common and preferred stock, item 127 minus item 132	164	01 $

FORM BE-12 (12-16-74)

Part IV - FINANCIAL SCHEDULES—Continued — *REPORT ALL AMOUNTS IN THOUSANDS OF U.S. DOLLARS*

Section D — RECONCILIATION OF RETAINED EARNINGS OF INCORPORATED REPORTER OR OWNER'S EQUITY FOR UNINCORPORATED REPORTER

		Amount (a)
134. Opening balance — Unincorporated Reporter enter amount from item 111, column (b). Incorporated Reporter enter amount from item 114, column (b).	42[illegible]	$
135. Net income after provision for U.S. income taxes — Enter amount from item 133.	166	
136. Dividends declared or net income remitted to owners — Incorporated Reporter enter amount of dividends declared on common and preferred stock, excluding stock dividends. Unincorporated Reporter enter amount of net income remitted to owners.	167	
137. Other changes, increase or (decrease) — Including stock dividends for incorporated Reporter — *Specify*	168	
138. Closing balance — Unincorporated Reporter enter amount from item 111, column (a). Incorporated Reporter enter amount from item 114, column (a). Must equal item 134 plus item 135 minus item 136 plus item 137.	169	$

Section E — STATEMENT OF CHANGES IN FINANCIAL POSITION

		Amount for year (a)
• SOURCE OF FUNDS		
139. Net income after provisions for U.S. income taxes — Enter amount from item 133.	170	$
140. Depletion, etc. — Charge to the income statement relating to gross cost of property as defined for item 146.	171	
141. Depreciation, etc. — Charge to the income statement relating to gross cost of plant and equipment as defined for item 148.	172	
142. Amortization — Charge to the income statement for amortization and like charges against intangible assets, and similar items which are included in item 103.	173	
143. Sales of property, plant and equipment — Net book value of assets at the time of sale exclusive of any gains or losses (such gains or losses should be shown in the income statement)	174	
144. Retirement of property, plant and equipment — Net book value of assets at the time of retirement	175	
145. Change in owners' equity in unincorporated Reporter — Exclude the effect of net income shown in item 133 and net income remitted to owners shown in item 136.	176	
146. Sales or purchases of capital stock of this Reporter (incorporated only) — Sales of additional capital stock, net of repurchases by this Reporter of its outstanding capital stock, including any contributions to capital not resulting in issuance of capital stock, but excluding stock dividends	177	
147. Change in total liabilities — Item 110, closing balance minus opening balance	178	
148. Other sources — *Specify*	179	
149. TOTAL SOURCES *(Sum of items 139 through 148, must equal item 157)* →	181	$

Continue with section E, item 150, at top of page →

Section E — STATEMENT OF CHANGES IN FINANCIAL POSITION — Continued

		Amount for year (a)
• APPLICATION OF FUNDS		
150. Change in current assets — Total difference between opening and closing balances of the balance sheet current asset accounts items 94 through 99, column (a) minus column (b)	[illegible]	$
151. Expenditures for property — For the acquisition of land, buildings, and mineral rights, both for those used or held by this Reporter and those leased to others, but excluding those for mineral properties, for those for resale, and capital and exploration and development costs. Covers those property items charged to the balance sheet net property, plant and equipment account, item 100, and shown separately as item 116.	182	
152. Expenditures for plant and equipment — For acquisition and replacement of structures, machinery, and equipment, both for those used or held by this Reporter and those leased to others, including those for special tools, construction in progress, and capitalized exploration and development costs, but excluding those for expensed repairs and intangible assets. Covers those plant and equipment items charged to the balance sheet net property, plant and equipment account, item 100, and shown separately as item 118.	183	
153. Other additions to (subtractions from) property, plant and equipment account, item 100 — *Specify*	184	
154. Dividends or net income remitted to owners — Incorporated Reporter enter amount of dividends declared on common and preferred stock, excluding stock dividends. Unincorporated Reporter enter amount of net income remitted to owners. Same as item 136	185	
155. Change in equity investment in affiliates for which this Reporter is a parent — Total difference between the opening and closing balances of balance sheet items 103 and 104, column (a) minus column (b)	[illegible]	
156. Change in other noncurrent assets — Total difference between the opening and closing balances of the balance sheet noncurrent assets account (item 103), column (a) minus column (b)	187	
157. TOTAL APPLICATIONS *(Sum of items 150 through 156, must equal item 149)* →	188	$

NOTE — If the opening balance for item 100 plus the sum of items 151, 152, and 153 minus the sum of items 140, 141, 142, and 144 does not equal the closing balance of item 100 — *Explain*

Section F — COMPOSITION OF EXTERNAL FINANCING

		TOTAL (Sum of columns (b) through (e)) (a)	POSITION WITH — Foreign parent(s) and foreign affiliates of foreign parent(s) (b)	Other foreign persons (c)	U.S. parent(s) and U.S. affiliates of foreign parent(s) of this Reporter (d)	Other U.S. persons (e)
• CLOSING BALANCES						
Current liabilities — Sum of total column for items 158 and 159 must equal sum of closing balances, items 105, 106, and 107.						
158. To banks	189	$	$	$	$	$
159. To other than banks	190					
Long-term debt — Sum of total column for items 160 and 161 must equal closing balance of item 108.						
160. To banks	191					
161. To other than banks	192					
162. Current receivables — Total must equal sum of closing balances, items 95 and 96.	193					
163. Noncurrent receivables and financial investments — Total must equal closing balance for the part of item 103 which is noncurrent receivables and financial investments.	194					
164. Capital stock or owners' equity — For an incorporated Reporter, total column must equal sum of closing balance of items 112 and 113; for an unincorporated Reporter, total column must equal closing balance of item 111.	195					
• OPENING BALANCES						
Current liabilities — Sum of total column for items 165 and 166 must equal sum of opening balances of items 105, 106, and 107.						
165. To banks	196					
166. To other than banks	197					
Long-term debt — Sum of total column for items 167 and 168 must equal opening balance of item 108.						
167. To banks	198					
168. To other than banks	199					
169. Current receivables — Total must equal sum of opening balances of items 95 and 96.	200					
170. Noncurrent receivables and financial investments — Total must equal opening balance for the part of item 103 which is noncurrent receivables and financial investments.	201					
171. Capital stock or owners' equity — For an incorporated Reporter, total column must equal sum of opening balance of items 112 and 113; for an unincorporated Reporter, total column must equal opening balance of item 111.	202	$	$	$	$	$
COMMERCE USE ONLY ▶	203					

FORM BE-12 (12-16-74)

Part IV - FINANCIAL SCHEDULES—Continued - *REPORT ALL AMOUNTS IN THOUSANDS OF U.S. DOLLARS*

Section G SUPPLEMENTARY FINANCIAL DATA

		Amount for year (a)
172. Dividends received – Dividends, in cash or in kind, on both common and preferred stock, received by or credited to this Reporter by any payor net of tax withheld at the source, but excluding stock and liquidating dividends	40204	01 $
173. Interest received – Total interest received by or credited to this Reporter by any payor, net of tax withheld at the source	205	01
174. Interest paid – Total interest paid, gross of tax withheld, by this Reporter to all payees	206	01
175. Production royalty payments to governments in the United States – Payments to Federal, State, and local governments, their subdivisions and agencies, of production royalty expenses for natural resources	207	01
176. Taxes (other than income and payroll taxes) and non-tax payments to governments in the United States (other than production royalty payments) – Include tax liabilities other than income and payroll taxes, net of refunds or credits, paid or accrued to Federal, State, and local governments, their subdivisions and agencies, by this Reporter for the year. Include sales, consumption, and excise taxes; property and other taxes on the value of assets and capital; any remaining taxes (other than income and payroll taxes); and all payments on non-tax liabilities to governments in the United States (except production royalty payments) such as import and export duties, license fees, fines and penalties, and similar items.	208	01 $

Continue with section G, item 177, at top of page →

Section G SUPPLEMENTARY FINANCIAL DATA – Continued

		Amount for year (a)
177. Research and development (R&D) expenditures, total – Include all costs incurred, including depreciation, wages and salaries, taxes, cost of materials and supplies, and allocated overhead (but excluding capital expenditures) by this Reporter to support R&D performed in facilities owned or operated by this Reporter. Include cost of R&D performed by this Reporter for its own benefit, as well as costs of R&D performed for others on contract; exclude costs of R&D performed for this Reporter by others.	209	01 $
178. Government funded R&D – That part of total research and developement expenditures, item 177, funded by the U.S. Federal Government.	210	01
179. Payments of fees and royalties to foreigners other than foreign parent(s) and foreign affiliate(s) of foreign parent(s) of this Reporter – Include royalties, license fees, and other payments for use or sale of intangible property by this Reporter.	211	01
180. Receipts of fees and royalties from foreigners other than foreign parent(s) and foreign affiliate(s) of foreign parent(s) of this Reporter – Include royalties, license fees, and other receipts for use or sale of intangible property by this Reporter.	212	01
181. Sales to U.S. affiliates of foreign parent(s) – That portion of net sales or gross revenues, item 123, which represents sales to, or revenues from, U.S. affiliates.	213	01 $

Section H EMPLOYMENT AND EMPLOYEE COMPENSATION

NOTE – Employment and employee compensation are to be reported inclusive of those employees, and their associated costs, who are engaged in an activity, the value of which was capitalized. Production workers are those employees who were engaged in production or related activities at or below the working supervisory level. Non-production workers are those employees who are not engaged directly in production or related activities. See general instructions, page 7, for requirements and definitions.

		Enter actual number of employees: Total (a)	Production workers (b)	Non-production workers (c)
182. Total number of employees – Enter the equivalent to the average number of full-time employees for the year. Part-time employees should be included at the appropriate percentage of a full-time employee according to the proportion of total time worked. Seasonal employees or employees hired or released during the year should also be included at the appropriate percentage. Sum of items 183, 184, and 185.	214	01	02	03
183. Number of employees who are U.S. citizens	215	01	02	03
Number of employees who are NOT U.S. citizens				
184. Employees in, or expected to be in, the United States for less than one year	216	01		
185. Employees who have been, or are expected to be, in the United States for one year or more	217	01		
186. TOTAL EMPLOYEE COMPENSATION *(Sum of items 187, 188, and 189)* →	218	01 $	02 $	03 $
187. Wages and salaries, total – (Follow the definition of wages and salaries used for calculating the U.S. Federal withholding tax.) Include employees' gross earnings (before any payroll deductions), vacation, dismissal, sick pay, paid bonuses, commissions (except to independent sales personnel), and the cash equivalent of earnings paid in kind.	219	01 $	02 $	03 $
188. Supplementary benefits **Legally required expenditures** – Include payments for all programs required under Federal and State legislation.	220	01 $	02 $	03 $
189. Payments for voluntary plans – Include employer contributions for plans not legally required under Federal and State legislation, such as group insurance plans, private pension plans, etc. Exclude non-payment type fringe benefits, such as free parking, losses on company-owned cafeterias, etc.	221	01 $	02 $	03 $
190. Portion of total wages and salaries, item 187, for employees who are not U.S. citizens and are included in item 185.	222	01 $		

SUPPLEMENTAL INSTRUCTIONS FOR INSURANCE COMPANIES, BANKS, AND AIRLINE STATIONS

These special instructions are intended to supplement the instructions given elsewhere on the form. If problems should arise in applying these instructions or in reporting other specific items, contact this Bureau at (202) 523-0547.

• INSURANCE COMPANIES •

When there is a difference, the Financial Schedules are to be prepared on the same basis as an annual report to the stockholders, rather than on the basis of an annual statement to an insurance department. Valuation should be according to normal commercial accounting procedures, not at the rates promulgated by the National Association of Insurance Commissioners. Include the assets not acceptable for the annual statement to an insurance department.

Items

95 Trade accounts and notes receivables – Include current items such as agent's balances or unallocated premiums, amounts recoverable from reinsurers, and other current notes and accounts (net of allowances for doubtful items) arising from the ordinary course of business.

105 Trade accounts and notes payable – Include current items such as loss liabilities, policy claims, commissions due, and other current liabilities arising from the ordinary course of business. (Policy reserves are to be included in "Other liabilities," item 109, unless they are clearly current liabilities.)

121 Net sales or gross operating revenues – Include items such as earned premiums, annuity considerations, gross investment income, and items of a similar nature. Exclude investment income from affiliates in which this Reporter has equity investments; report this income in items 124 and 125.

128 Cost of goods sold – Include costs relating to net sales or gross operating revenues, item 123, such as policy losses incurred, death benefits, matured endowments, other policy benefits, increases in liabilities for future policy benefits, other underwriting expenses, and investment expenses.

• BANKS •

Items

95 Trade accounts and notes receivable – Include current items such as current portion of loans, customer's liabilities to the bank on outstanding acceptances, and other current notes and accounts (net of allowances for doubtful items) arising from the ordinary course of business.

105 Trade accounts and notes payable – Include current items such as deposits, acceptances, and other current liabilities arising from the ordinary course of business.

• AIRLINE STATIONS •
(BRANCH OR INCORPORATED)

a. In PART I of form BE-12, item 14a, mark "Other," and specify "airline station."

b. The balance sheet should reflect assets located in the station, such as buildings or leaseholds, inventories of fuel or spare parts, office equipment, maintenance and repair equipment, and items of a similar nature. Transit aircraft should be excluded.

c. Item 132 of the income statement should show all costs and expenses of the station including depreciation. Item 132 should be broken down into the categories in items 128 through 131. Item 121 should be the amount in item 132 plus the profit imputed to the performance of service for or sales to outside customers (excluding ticket sales or freight revenues generated).

d. Employment and employee compensation should relate only to station personnel. Exclude all air crews and flight personnel.

Part IV - FINANCIAL SCHEDULES—Continued – *REPORT ALL AMOUNTS IN THOUSANDS OF U.S. DOLLARS*
(If actual figures are not available give best estimates)

Section I — MERCHANDISE TRADE OF REPORTER WITH FOREIGNERS	COMMERCE USE ONLY	EXPORTS – Shipped by Reporter to foreigners (Valued f.a.s. U.S. port)					IMPORTS – Shipped to Reporter by foreigners (Valued f.a.s. foreign port)		
		Total	To foreign parent(s) and foreign affiliate(s) of foreign parent(s)		To all other foreigners		Total	By foreign parent(s) and foreign affiliate(s) of foreign parent(s)	By all other foreigners
			Products of Reporter	Products of others	Products of Reporter	Products of others			
		(a)	(b)	(c)	(d)	(e)	(f)	(g)	(h)
191. Merchandise trade of Reporter with foreigners, total – Equals sum of items 192 through 201 and also sum of items 202 through 234 40223		02 $	03 $	04 $	05 $	06 $	07 $	08 $	09 $
BY PRODUCT (See the "Export and Import Trade Classifications" portion of the INDUSTRY CLASSIFICATIONS AND EXPORT AND IMPORT TRADE CLASSIFICATIONS BOOKLET)		02	03	04	05	06	07	08	09
192. Foods, beverages, and tobacco (SITC 0 – 1) 224									
193. Inedible crude materials, except fuels (SITC 2) 225		02	03	04	05	06	07	08	09
194. Petroleum and products, excluding natural gas (SITC 33) 226		02	03	04	05	06	07	08	09
195. Chemicals (SITC 5) 227		02	03	04	05	06	07	08	09
196. Machinery, electrical and non-electrical (SITC 71 and 72) 228		02	03	04	05	06	07	08	09
197. Road motor vehicles and parts (SITC 732) 229		02	03	04	05	06	07	08	09
198. Other transportation equipment (SITC 73, excluding 732) 230		02	03	04	05	06	07	08	09
199. Metal manufactures (SITC 67, 68, and 69) 231		02	03	04	05	06	07	08	09
200. Other manufactures (SITC 61 through 66, and 8) 232		02	03	04	05	06	07	08	09
201. All other (SITC 3, excluding 33; 4; and 9) 233		02	03	04	05	06	07	08	09
BY COUNTRY									
202. Australia 234	01 601	02	03	04	05	06	07	08	09
203. Belgium and Luxembourg 235	01 302	02	03	04	05	06	07	08	09
204. Brazil 236	01 202	02	03	04	05	06	07	08	09
205. Canada 237	01 100	02	03	04	05	06	07	08	09
206. Denmark 238	01 305	02	03	04	05	06	07	08	09
207. France 239	01 307	02	03	04	05	06	07	08	09
208. Germany 240	01 308	02	03	04	05	06	07	08	09
209. Ireland 241	01 313	02	03	04	05	06	07	08	09
210. Italy 242	01 314	02	03	04	05	06	07	08	09
211. Japan 243	01 614	02	03	04	05	06	07	08	09
212. Mexico 244	01 213	02	03	04	05	06	07	08	09
213. Netherlands 245	01 319	02	03	04	05	06	07	08	09
214. New Zealand 246	01 620	02	03	04	05	06	07	08	09
215. Sweden 247	01 324	02	03	04	05	06	07	08	09
216. Switzerland 248	01 325	02	03	04	05	06	07	08	09
217. South Africa 249	01 436	02	03	04	05	06	07	08	09
218. United Kingdom 250	01 327	02	03	04	05	06	07	08	09
219. Venezuela 251	01 219	02	03	04	05	06	07	08	09
Other – *Specify countries*									
220. 252	01	02	03	04	05	06	07	08	09
221. 253	01	02	03	04	05	06	07	08	09
222. 254	01	02	03	04	05	06	07	08	09
223. 255	01	02	03	04	05	06	07	08	09
224. 256	01	02	03	04	05	06	07	08	09
225. 257	01	02	03	04	05	06	07	08	09
226. 258	01	02	03	04	05	06	07	08	09
227. 259	01	02	03	04	05	06	07	08	09
228. 260	01	02	03	04	05	06	07	08	09
229. 261	01	02	03	04	05	06	07	08	09
230. 262	01	02	03	04	05	06	07	08	09
231. 263	01	02	03	04	05	06	07	08	09
232. 264	01	02	03	04	05	06	07	08	09
233. 265	01	02	03	04	05	06	07	08	09
234. 266	01	02 $	03 $	04 $	05 $	06 $	07 $	08 $	09 $

FORM BE-12 (12-16-74)

FORM DE-12 112-16-741

Part IV - FINANCIAL SCHEDULES—Continued – *REPORT ALL DOLLAR AMOUNTS IN THOUSANDS OF U.S. DOLLARS*

Section J SCHEDULE OF EMPLOYMENT, REVENUES, AND PROPERTY, PLANT AND EQUIPMENT, BY STATE

(See Instruction Booklet, page 8, for description of property, plant and equipment use categories.)

40267

Employment, revenues, and property, plant and equipment data by U.S. State, territory, or possession

Enter name of U.S. State, territory, or possession and the corresponding code (listed below) at the top of each column needed to complete this schedule.

			TOTAL (All States)	State Code 02	State Code 03	State Code 04	State Code 05	State Code 06	State Code 07	State Code 08	State Code 09	State Code 10
			(a)	(b)	(c)	(d)	(e)	(f)	(g)	(h)	(i)	(j)
235. Number of employes – Total must equal Item 182, column (a)	Number	268	01	02	03	04	05	06	07	08	09	10
236. Wages and salaries – Total must equal Item 187, column (a)	THOUSANDS OF U.S. DOLLARS	269	01 $	02 $	03 $	04 $	05 $	06 $	07 $	08 $	09 $	10 $
237. Net sales of gross operating revenues – Total must equal Item 123		270	01	02	03	04	05	06	07	08	09	10
238. Annual lease commitment for property, plant and equipment leased by Reporter from others and not included in the Reporter's assets (exclude office space and fixtures)		271	01 $	02 $	03 $	04 $	05 $	06 $	07 $	08 $	09 $	10 $
239. Land and mineral rights a: Total acres of land and mineral rights owned at the end of reporting period if total exceeds 200 acres.	Acres	272	01	02	03	04	05	06	07	08	09	10
b: Total acres of land and mineral rights leased from others at the end of reporting period if total exceeds 200 acres.		273	01	02	03	04	05	06	07	08	09	10
240. Total property, plant and equipment owned at the end of reporting period, valued at historical cost – Must equal sum of the closing balances for Items 98, 116, and 118 and sum of Items 241 through 257	REPORT IN THOUSANDS OF U.S. DOLLARS	274 $	01 $	02 $	03 $	04 $	05 $	06 $	07 $	08 $	09 $	10 $
Agricultural 241. Citrus and deciduous tree fruits		275	01	02	03	04	05	06	07	08	09	10
242. Other crops		276	01	02	03	04	05	06	07	08	09	10
243. Livestock, except beef cattle feedlots		277	01	02	03	04	05	06	07	08	09	10
244. Beef cattle feedlots		278	01	02	03	04	05	06	07	08	09	10
245. Agricultural services		279	01	02	03	04	05	06	07	08	09	10
246. Timberland		280	01	02	03	04	05	06	07	08	09	10
247. Crude petroleum and natural gas		281	01	02	03	04	05	06	07	08	09	10
248. Other natural resources		282	01	02	03	04	05	06	07	08	09	10
249. Transient lodging and recreational facilities		283	01	02	03	04	05	06	07	08	09	10
250. Residential		284	01	02	03	04	05	06	07	08	09	10
Industrial 251. Food processing		285	01	02	03	04	05	06	07	08	09	10
252. Agricultural chemicals		286	01	02	03	04	05	06	07	08	09	10
253. Farm and garden machinery and equipment		287	01	02	03	04	05	06	07	08	09	10
254. Petroleum refining and related products		288	01	02	03	04	05	06	07	08	09	10
255. Other industrial		289	01	02	03	04	05	06	07	08	09	10
256. Other commercial and business		290	01	02	03	04	05	06	07	08	09	10
257. Other		291	01 $	02 $	03 $	04 $	05 $	06 $	07 $	08 $	09 $	10 $
COMMERCE USE ONLY ▶		292	01	02	03	04	05	06	07	08	09	10

STATE CODE

01	Alabama	09	Connecticut	17	Illinois	23	Maine	29	Missouri	35	New Mexico	41	Oregon	48	Texas	55	Wisconsin	14	Guam
02	Alaska	10	Delaware	18	Indiana	24	Maryland	30	Montana	36	New York	42	Pennsylvania	49	Utah	56	Wyoming	03	American Samoa
04	Arizona	12	Florida	19	Iowa	25	Massachusetts	31	Nebraska	37	North Carolina	44	Rhode Island	50	Vermont	11	District of Columbia	60	Other U.S. territories and possessions
05	Arkansas	13	Georgia	20	Kansas	26	Michigan	32	Nevada	38	North Dakota	45	South Carolina	51	Virginia	07	Panama Canal Zone		
06	California	15	Hawaii	21	Kentucky	27	Minnesota	33	New Hampshire	39	Ohio	46	South Dakota	53	Washington	43	Puerto Rico	65	U.S. offshore oil and gas sites
08	Colorado	16	Idaho	22	Louisiana	28	Mississippi	34	New Jersey	40	Oklahoma	47	Tennessee	54	West Virginia	52	Virgin Islands	70	Foreign

FORM BE-12 (12-16-78)

Part IV - FINANCIAL SCHEDULES—Continued - *REPORT ALL DOLLAR AMOUNTS IN THOUSANDS OF U.S. DOLLARS*

Section J SCHEDULE OF EMPLOYMENT, REVENUES, AND PROPERTY, PLANT AND EQUIPMENT, BY STATE - Continued

(See Instruction Booklet, page 8, for description of property, plant and equipment use categories.)

Employment, revenues, and property, plant and equipment data by U.S. State, territory, or possession

Enter name of U.S. State, territory, or possession and the corresponding code (listed on page 11) at the top of each column needed to complete this schedule.

		40293	State	State	State	State	State	State	State	State	State	State
			Code . . . 01 (k)	Code . . . 02 (l)	Code . . . 03 (m)	Code . . . 04 (n)	Code . . . 05 (o)	Code . . . 06 (p)	Code . . . 07 (q)	Code . . . 08 (r)	Code . . . 09 (s)	Code . . . 10 (t)
235. Number of employees	Number	294	01	02	03	04	05	06	07	08	09	10
236. Wages and salaries	THOUSANDS OF U.S. DOLLARS	295	01 $	02 $	03 $	04 $	05 $	06 $	07 $	08 $	09 $	10 $
237. Net sales or gross operating revenues		296	01	02	03	04	05	06	07	08	09	10
238. Annual lease commitment for property, plant and equipment leased by Reporter from others and not included in the Reporter's assets (exclude office space and fixtures)		297	01 $	02 $	03 $	04 $	05 $	06 $	07 $	08 $	09 $	10 $
239. Land and mineral rights a. Total acres of land and mineral rights owned at the end of reporting period if total exceeds 200 acres.	Acres	290	01	02	03	04	05	06	07	08	09	10
b. Total acres of land and mineral rights leased from others at the end of reporting period if total exceeds 200 acres.		299	01	02	03	04	05	06	07	08	09	10
240. Total property, plant and equipment owned at the end of reporting period, valued at historical cost	REPORT IN THOUSANDS OF U.S. DOLLARS	300	01 $	02 $	03 $	04 $	05 $	06 $	07 $	08 $	09 $	10 $
Agricultural 241. Citrus and deciduous tree fruits		301	01	02	03	04	05	06	07	08	09	10
242. Other crops		302	01	02	03	04	05	06	07	08	09	10
243. Livestock, except beef cattle feedlots		303	01	02	03	04	05	06	07	08	09	10
244. Beef cattle feedlots		304	01	02	03	04	05	06	07	08	09	10
245. Agricultural services		305	01	02	03	04	05	06	07	08	09	10
246. Timberland		306	01	02	03	04	05	06	07	08	09	10
247. Crude petroleum and natural gas		307	01	02	03	04	05	06	07	08	09	10
248. Other natural resources		308	01	02	03	04	05	06	07	08	09	10
249. Transient lodging and recreational facilities		309	01	02	03	04	05	06	07	08	09	10
250. Residential		310	01	02	03	04	05	06	07	08	09	10
Industrial 251. Food processing		311	01	02	03	04	05	06	07	08	09	10
252. Agricultural chemicals		312	01	02	03	04	05	06	07	08	09	10
253. Farm and garden machinery and equipment		313	01	02	03	04	05	06	07	08	09	10
254. Petroleum refining and related products		314	01	02	03	04	05	06	07	08	09	10
255. Other industrial		315	01	02	03	04	05	06	07	08	09	10
256. Other commercial and business		316	01	02	03	04	05	06	07	08	09	10
257. Other		317	01 $	02 $	03 $	04 $	05 $	06 $	07 $	08 $	09 $	10 $
COMMERCE USE ONLY ▶		318	01	02	03	04	05	06	07	08	09	10

[FR Doc. 80-28213 Filed 9-11-80; 8:45 am]

BILLING CODE 3510-26-C

dial•a•reg

For an advance "look" at the Federal Register, try our information service. A recording will give you selections from our highlights listing of documents to be published in the next day's issue of the Federal Register.

Washington: **202-523-5022**

Chicago: **312-663-0884**
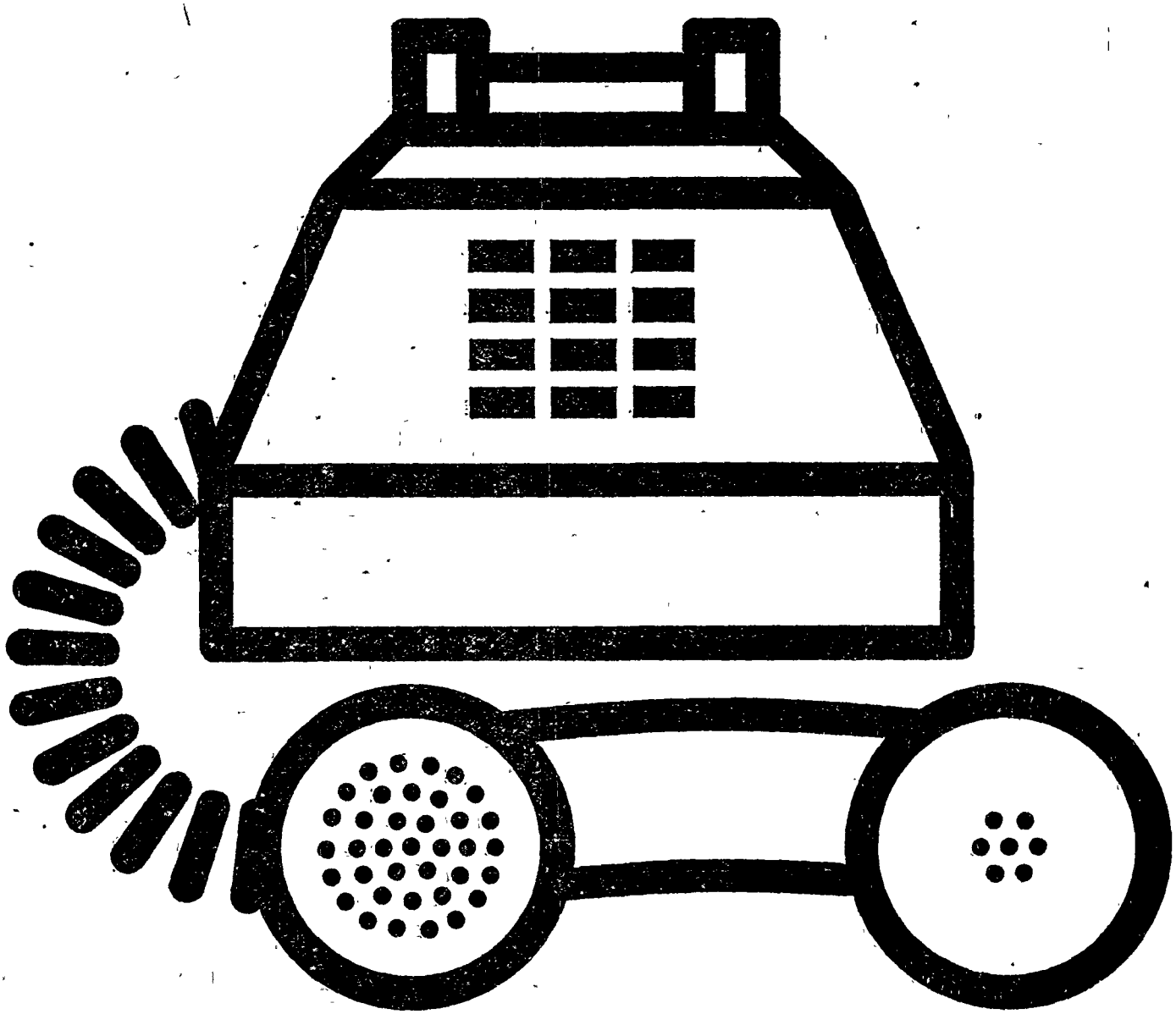
Los Angeles: **213-688-6694**