12-11-80
Vol. 45 No. 240
Pages 81529-81724

federal register

Thursday
December 11, 1980

Highlights

81639-81641 **Grant Programs—Business** Commerce/MBDA seeks applicants to operate one project for a 12 month period beginning in March, April and May 1981 within various States in the U.S. under the General Business Services Program; apply by 1-8-81 and 2-6-81 (6 documents)

81561, 81606 **Excise Taxes** Treasury/IRS issues proposed and temporary rules that clarify the definition of the term "producer" for purposes of title I of the Crude Oil Windfall Profit Tax Act of 1980; effective 2-29-80 under certain conditions; comments by 2-9-81 (2 documents)

81711 **Taxes** Treasury/Sec'y suggest system for taxing foreign exchange gains and losses

81537 **Banking** FRS releases final rule regarding nonbanking activities of foreign banking organizations; effective 1-3-81; comments by 1-30-81

81646 **Grant Programs—Education** ED extends closing date from 12-1-80 to 1-5-81, for the transmittal of applications for New Developer Demonstrators under the National Diffusion Network Program

81669 **Continental Shelf** Interior/GS publishes notification of receipt of a proposed development and production plan

CONTINUED INSIDE

Highlights

FEDERAL REGISTER Published daily, Monday through Friday, (not published on Saturdays, Sundays, or on official holidays), by the Office of the Federal Register, National Archives and Records Service, General Services Administration, Washington, D.C. 20408, under the Federal Register Act (49 Stat. 500, as amended; 44 U.S.C. Ch. 15) and the regulations of the Administrative Committee of the Federal Register (1 CFR Ch. I). Distribution is made only by the Superintendent of Documents, U.S. Government Printing Office, Washington, D.C. 20402.

The Federal Register provides a uniform system for making available to the public regulations and legal notices issued by Federal agencies. These include Presidential proclamations and Executive Orders and Federal agency documents having general applicability and legal effect, documents required to be published by Act of Congress and other Federal agency documents of public interest. Documents are on file for public inspection in the Office of the Federal Register the day before they are published, unless earlier filing is requested by the issuing agency.

The Federal Register will be furnished by mail to subscribers, free of postage, for $75.00 per year, or $45.00 for six months, payable in advance. The charge for individual copies is $1.00 for each issue, or $1.00 for each group of pages as actually bound. Remit check or money order, made payable to the Superintendent of Documents, U.S. Government Printing Office, Washington, D.C. 20402.

There are no restrictions on the republication of material appearing in the Federal Register.

Questions and requests for specific information may be directed to the telephone numbers listed under INFORMATION AND ASSISTANCE in the READER AIDS section of this issue.

81669 **Continental Shelf** Interior/GS issues a final notice to lessees and operators concerning produced oil and gas exempt from royalty requirements; effective 1-12-81

81644 **Travel** DOD/Sec'y list changes in per diem rates prescribed for U.S. Government employees on official travel in Alaska, Hawaii, Puerto Rico and possessions of the U.S.; effective 11-1-80

81666 **Motor Vehicles** GSA announces vehicle miles per gallon ratings to be used by Federal agencies in preparing FY 81 vehicle acquisition forecasts; expiration 9-30-81

81574 **Motor Vehicles** DOT/NHTSA establishes procedures to be followed in adjudications dealing with automotive fuel economy; effective 1-12-81

81625 **Motor Vehicle Safety** DOT/NHTSA proposes rule regarding seat belt assembly anchorages and anchorages for child restraint systems; comments by 2-9-81

81621 **Motor Carriers** DOT/FHWA solicits comments by 3-11-81, regarding four-way flashers on slow-moving vehicles

81706 **Aviation** DOT/FAA announces resolution and identifies 61 proposed Flight Service Stations (FSS's); effective 11-13-80

81616 **Merchant Vessels** DOT/CG proposes to delete requirement for carriage of line-throwing appliances onboard vessels in ocean and coastwise service on other than an international voyage; comments by 3-12-81

81535 **Immigration** Justice/INS adds carrier to the list of transportation lines to guarantee preinspection of passengers and crews at places outside the U.S.; effective 11-20-80

81635 **Loan Programs—Agriculture** USDA/FmHA gives notice of current rate of interest for insured business and industrial loans

81602 **Nuclear Power Plants** NRC solicits comments by 2-9-81, regarding limitations on a construction permit holder to make changes in a facility during construction

81722 **Sunshine Act Meetings**

Contents

Federal Register
Vol. 45, No. 240
Thursday, December 11, 1980

Agricultural Marketing Service
RULES
81532 Oranges (navel) grown in Ariz. and Calif.
Perishable Agricultural Commodities Act:
81529 License fees, increase
81532 Raisins produced from grapes grown in Calif.
NOTICES
Stockyards; posting and deposting:
81635 Hardin County Stockyards, Tenn.

Agriculture Department
See Agricultural Marketing Service; Animal and Plant Health Inspection Service; Commodity Credit Corporation; Farmers Home Administration; Federal Crop Insurance Corporation; Forest Service.

Alcohol Fuels, National Commission
NOTICES
81691 Meetings

Animal and Plant Health Inspection Service
RULES
Livestock and poultry quarantine:
81535 Exotic Newcastle disease
Plant quarantine, foreign:
81530 Chrysanthemum spp. from Canada

Centers for Disease Control
See National Institute for Occupational Safety and Health

Civil Aeronautics Board
PROPOSED RULES
Procedural regulations:
81604 Board proceedings; conduct rules; civil penalty for violation; extension of time
NOTICES
Hearings, etc.:
81635 Trans World Airlines, Inc.
81722 Meetings; Sunshine Act

Coast Guard
PROPOSED RULES
Drawbridge operations:
81607 South Carolina
Lifesaving equipment:
81616 Line throwing appliances, required equipment on merchant vessels; requirement deleted except for international voyages
81607 Navigational restrictions; seaplane landing areas in San Juan harbor

Commerce Department
See Foreign-Trade Zones Board; International Trade Administration; Maritime Administration; Minority Business Development Agency; National Oceanic and Atmospheric Administration.

Commodity Credit Corporation
RULES
Loan and purchase programs:
81533, 81534 Grain, etc. (2 documents)

Commodity Futures Trading Commission
NOTICES
Futures contracts, proposed; availability:
81643 Chicago Mercantile Exchange; Standard and Poor's 500 stock price index; terms and conditions; correction
81722, 81723 Meetings; Sunshine Act (4 documents)

Customs Service
NOTICES
Tariff-rate quotas:
81711 Potatoes, white or Irish

Defense Department
See also Coast Guard Deparment.
NOTICES
81644 Travel per diem rates; civilian personnel; changes

Delaware River Basin Commission
NOTICES
81644 Comprehensive plan, water supply and sewage treatment plant projects; hearings

Economic Regulatory Administration
NOTICES
Consent orders:
81648 Parten, J. R.
Powerplant and industrial fuel use; prohibition orders, exemption requests, etc.:
81649 Upjohn Co.
Remedial orders:
81650 Garland Exxon

Education Department
See also: Museum Services Institute.
NOTICES
Grant applications and proposals, closing dates:
81646 National diffusion network program; new developer demonstrators
Meetings:
81645 Indian Education National Advisory Council

Energy Department
See also Economic Regulatory Administration; Federal Energy Regulatory Commission.
NOTICES
Environmental statements; availability, etc.:
81647 Martin Marietta Corp., Ga.; natural gas or petroleum products prohibition order
Meetings:
81647 International Energy Agency Industry Advisory Board

Environmental Protection Agency
RULES
Grants, State and local assistance:
81567 Wastewater treatment works construction; class deviation

PROPOSED RULES
Air quality implementation plans; approval and promulgation; various States, etc.:
81608 Kansas
Toxic substances:
81615 Premanufacture notification requirements and review procedures; economic impact and draft regulatory analyses; availability; extension of time
NOTICES
Air pollution; ambient air monitoring reference and equivalent methods applications, etc.:
81650 MASS-CO Model 1 carbon monoxide analyzer
Air pollution; standards of performance for new stationary sources:
81653 Gas turbines; petition denied
Pesticides; tolerances in animal feeds and human food:
81651 Dow Chemical USA
81650 FMC Corp.
Toxic and haxardous substances control:
81651 Premanufacture notices receipts
81665 Premanufacture notices receipts; correction

Farmers Home Administration
NOTICES
81635 Business and industrial loans, insured; interest rates

Federal Aviation Administration
RULES
Airworthiness directives:
81545 Boeing
81546 Robinson Helicopter Co.
81547 Rockwell International
81548 Control zones
81549 IFR altitudes
81554 Standard instrument approach procedures
81548 VOR Federal airways
PROPOSED RULES
81603 Transition areas
NOTICES
81706 Flight Service Station Modernization Plan; resolution of public review; identification of 61 proposed FSS locations

Federal Communications Commission
RULES
Communications equipment:
81568 Radio frequency devices; maximum level of permissible harmonic emissions for certain field disturbance sensors
PROPOSED RULES
Common carrier services:
81619 North Atlantic telecommunications needs during 1985–1995; inquiry

Federal Crop Insurance Corporation
RULES
Crop insurance; various commodities:
81531 Barley; correction

Federal Deposit Insurance Corporation
NOTICES
81723 Meetings; Sunshine Act

Federal Election Commission
NOTICES
81723 Meetings; Sunshine Act

Federal Energy Regulatory Commission
NOTICES
81723 Meetings; Sunshine Act

Federal Highway Administration
RULES
81573 Delegation of authority; motor carrier safety; technical correction
PROPOSED RULES
Motor carrier safety regulations:
81621 Four-way flashers on slow-moving vehicles

Federal Home Loan Bank Board
RULES
Federal home loan bank system:
81545 Neighborhood Reinvestment Office fiscal year to conform to Neighborhood Reinvestment Corporation and submission of nine-month transition budget, etc.

Federal Maritime Commission
NOTICES
Energy and environmental statements; availability, etc.
81665 Long Beach, Calif. and Toyota Motor Sales, U.S.A., Inc.; 3-year lease by City to Toyota of certain premises to be used, as a contract marine terminal
81666 Mediterranean-Gulf Conference; minibridge movements to U.S. Gulf coast ports or areas proximate to such ports
81723 Meetings; Sunshine Act

Federal Reserve System
RULES
International banking operations (Regulation K):
81537 Nonbanking activities of foreign banking organizations
Practice and procedure rules:
81543 Bank or company applying for deposit-taking facilities; newspaper notices of applications
81541 Bank or company applying for deposit-taking facilities; newspaper notices of applications, timeliness of comments and requests for hearings; policy statement
Reserve requirements of depository institutions (Regulation D):
81536 Transaction accounts; three or less telephone or preauthorized transfers permitted during statement cycle or four weeks
NOTICES
Applications, etc.:
81666 Dakota County Bancshares, Inc.
81723 Meetings; Sunshine Act

Federal Trade Commission
RULES
Prohibited trade practices:
81555 E. I. du Pont de Nemours & Co.

Fish and Wildlife Service
RULES
Fishing:
81600 Kirwin National Wildlife Refuge, Kans., et al.
NOTICES
81668, 81669 Endangered and threatened species permit; applications (2 documents)

Foreign-Trade Zones Board
NOTICES
Applications, etc.:
81636 Wisconsin

Forest Service
NOTICES
Environmental statements; availability, etc.:
81635 Ocala National Forest et al., Fla.; land and resource management plan; correction
Meetings:
81635 Pacific Crest National Scenic Trail Advisory Council

General Services Administration
NOTICES
Property management:
81666 Fuel economy mileage information for use in preparing FY 1981 vehicle acquisition forecasts

Geological Survey
RULES
Outer Continental Shelf; oil, gas, and sulphur operations:
81562 Oil and gas, unavoidable discharges; exemption from royalty payments
NOTICES
Coal resource areas:
81669 Texas
Outer Continental Shelf; oil, gas, and sulphur operations:
81669 Oil and gas, unavoidable discharges; exemption from royalty payments; final notice to lessees and operators (NTL)
Outer Continental Shelf; oil, gas, and sulphur operations; development and production plans
81669 Kerr-McGee Corp.

Health, Education, and Welfare Department
See Education Department; Health and Human Services Department.

Health and Human Services Department
See National Institute for Occupational Safety and Health.

Immigration and Naturalization Service
RULES
Transportation line contracts:
81535 Wardair Canada (1975) Ltd.

Indian Affairs Bureau
RULES
Irrigation projects; operation and maintenance charges:
81560 San Carlos, Ariz.

Interior Department
See Fish and Wildlife Service; Geological Survey; Indian Affairs Bureau; Land Management Bureau.

Internal Revenue Service
RULES
Excise taxes:
81561 Crude oil windfall profit tax; definition of "producer"; temporary
PROPOSED RULES
Excise taxes:
81606 Crude oil windfall profit tax; definition of "producer"; temporary; cross-reference

International Trade Administration
NOTICES
Scientific articles; duty free entry:
81637 California Institute of Technology
81637 Southern Illinois University-Edwardsville
81638 Trustees of the University of Pennsylvania
81638 University of Chicago

International Trade Commission
PROPOSED RULES
81605 Steel wire rope, imported; country-of-origin marking requirements; withdrawn
NOTICES
Import investigations:
81687 Airless paint spray pumps and components
81687 Countertop microwave ovens from Japan
81689 Headboxes and papermaking machine forming sections for continuous production of paper and components
81689 Leather wearing apparel from Uruguay
81689 Mass flow devices and components
81688 Nonrubber footwear
81688 Spring assemblies and components, and methods for manufacture
81688 Steel jacks from Canada
81687 Turning machines and components

Interstate Commerce Commission
NOTICES
Motor carriers:
81673 Agricultural cooperative transportation; filing notices
81677, 81680 Permanent authority applications (2 documents)
81687 Permanent authority applications; correction
81685 Petitions, applications, finance matters (including temporary authorities), alternate route deviations, intrastate applications, gateways, and pack and crate
Rail carriers:
81675 Demurrage, detention, and related accessorial charges; recordkeeping requirements; Missouri-Kansas-Texas Railroad Co. exemption
Railroad operation, acquisition, construction, etc.:
81674 Atlantic Pacific Railway Corp.
81676 McHugh Brothers Heavy Hauling, Inc.
Railroad services abandonment:
81674 Burlington Northern Inc.
81675 Illinois Central Gulf Railroad Co.
Rerouting of traffic:
81687 All railroads

Justice Department
See Immigration and Naturalization Service.

Land Management Bureau
NOTICES
Management framework plans, review and supplement, etc.:
81671 Oregon; critical environmental concern designation
Meetings:
81672 Cedar City District Grazing Advisory Board
81671 Cedar City District Multiple Use Advisory Council

81672 Ely District Multiple Use Advisory Council
Resource management plans:
81673 Box Elder County, Utah
Wilderness areas; characteristics, inventories, etc.:
81672 Utah
Withdrawal and reservation of lands, proposed, etc.:
81671, 81672 Idaho (2 documents)

Management and Budget Office
NOTICES
81699 Agency forms under review

Maritime Administration
RULES
Merchant marine training:
81567 Academy midshipmen; pay increase

Minority Business Development Agency
NOTICES
81639-81641 Financial assistance application announcements (6 documents)

Museum Services Institute
NOTICES
81723 Meetings; Sunshine Act

National Highway Traffic Safety Administration
RULES
81574 Adjudicative procedures; automotive fuel economy enforcement
Fuel economy standards, average:
81593 Trucks, light; 1983–85 model years
PROPOSED RULES
Motor vehicle safety standards;
81625 Child restraint systems, seat belt assembly anchorages
81624 Tires, new pneumatic, for passenger cars

National Institute for Occupational Safety and Health
NOTICES
Meetings:
81668 Cardiac effects of inhaled amines in laboratory animals

National Oceanic and Atmospheric Administration
PROPOSED RULES
Fishery conservation and management:
81633 Foreign fishing; billfish, oceanic sharks, wahoo, and mahi mahi in Pacific Ocean
81633 Foreign Fishing; snail fishery of Eastern Bering Sea
NOTICES
Marine mammal permit applications, etc.:
81642 Canada's Wonderland Ltd.
81642 Marine Animal Productions

National Transportation Safety Board
NOTICES
81692 Accident reports, safety recommendations and responses, etc.; availability

Nuclear Regulatory Commission
PROPOSED RULES
Production and utilization facilities, domestic licensing:
81602 Nuclear powerplants; construction permit holder, design and other changes in a facility during construction; advance notice
NOTICES
Applications, etc.:
81695 Connecticut Light & Power Co. et al.
81696 Connecticut Yankee Atomic Power Co.
81697 Philadelphia Electric Co. et al.
81697 Public Service Electric & Gas Co. et al.
81697 Tennessee Valley Authority
81698 University of California at Los Angeles
81696, 81697 Regulatory guides; issuance and availability (2 documents)

Postal Service
RULES
Domestic Mail Manual:
81563 Third class carrier route presort; maximum size limitations; final rule; correction

Research and Special Programs Administration, Transportation Department
RULES
Hazardous materials;
81569 Miscellaneous amendments
Incorporations by reference, approval (editorial note: This document appeared in the Federal Register for December 10, 1980; see entry under Federal Register Office.)

Securities and Exchange Commission
RULES
81556 Beneficial ownership, filing and disclosure requirements; filing of amendments
81558 Beneficial ownership, filing and disclosure requirements; filing of amendments; staff interpretation
NOTICES
Hearings, etc.:
81703 Colwyn Risk Fund, Inc.

State Department
RULES
Visas:
81560 Exchange visitors; administrative responsibility transfer from Secretary of State to Director of International Communication Agency
PROPOSED RULES
81606 International agreements; coordination and reporting; correction
NOTICES
International conferences:
81704 Private-sector representatives on U.S. delegations; list
Meetings:
81706 International Radio Consultative Committee (2 documents)

Textile Agreements Implementation Committee
NOTICES
Cotton, wool and man-made textiles:
81643 Macau

Trade Representative, Office of United States
NOTICES
Unfair trade practices, petitions, etc.:
81703 Universal Optical Co., Inc.; sunglasses and optical frames from United States to Switzerland; termination

Transportation Department
See also Coast Guard; Federal Aviation Administration; Federal Highway Administration; National Highway Traffic Safety Administration; Research and Special Programs Administration, Transportation Department.
NOTICES
Senior Executive Service:
81711 Bonus award schedule

Treasury Department
See also Customs Service; Internal Revenue Service.
NOTICES
81711 Foreign exchange gains and losses, tax treatment; discussion draft

Upper Mississippi River Basin Commission
NOTICES
81721 Meetings

MEETINGS ANNOUNCED IN THIS ISSUE

AGRICULTURE DEPARTMENT
Forest Service—
81635 Pacific Crest National Scenic Trial Advisory Council, Southern California Subcommittee, Pasadena, Calif., 2-26-81

EDUCATION DEPARTMENT
81645 Indian Education National Advisory Council, Washington, D.C., 1-9 through 1-11-81

ENERGY DEPARTMENT
81647 International Energy Agency, Industry Advisory Board, Paris, France, 12-15-80

HEALTH AND HUMAN SERVICES DEPARTMENT
Centers for Disease Control—
81668 Comparative cardiac effects of inhaled amines, Cincinnati, Ohio, 12-16-80

INTERIOR DEPARTMENT
Land Management Bureau—
81672 Cedar City District Grazing Advisory Board, Cedar City, Utah, 1-28-81
81671 Cedar City District Multiple Use Advisory Council, Cedar City, Utah, 1-15-81
81672 Multiple Use Advisory Council, Ely, Nev., 1-16 and 2-5-81
81673 Salt Lake District Office; preparation of Box Elder County resource management plan, Brigham City, Utah, 1-6-81; Grouse Creek, Utah, 1-15-81; Park Valley, Utah, 1-14-81; Snowville, Utah, 1-13-81

STATE DEPARTMENT
81706 International Radio Consultative Committee, Study Group 5 of the U.S. Organization, Boulder, Colo., 1-15-81
81706 International Radio Consultative Committee, Study Group 6 of the U.S. Organization, Boulder, Colo., 1-16-81

U.S. NATIONAL ALCOHOL FUELS COMMISSION
81691 Discussion of staff research and general business, Washington, D.C., 12-15-80

UPPER MISSISSIPPI RIVER BASIN COMMISSION
81721 Draft preliminary Master Plan due 1-1-81, Chicago, Ill., 12-18-80

HEARINGS

COMMERCE DEPARTMENT
Foreign-Trade Zones Board—
81636 Foreign Trade Zone No. 41, application for expansion of existing general-purpose zone and establishment of subzones, 1-8-81

DELAWARE RIVER BASIN COMMISSION
81644 Several projects as amendments to the Comprehensive Plan pursuant to Article 11 of the Compact, 12-16-80

CFR PARTS AFFECTED IN THIS ISSUE

A cumulative list of the parts affected this month can be found in the Reader Aids section at the end of this issue.

7 CFR
46 81529
319 81530
419 81531
907 81532
989 81532
1421 (2 documents) 81533, 81534

8 CFR
238 81535

9 CFR
82 81535

10 CFR
Proposed Rules:
50 81602

12 CFR
204 81536
211 81537
262 (2 documents) 81541, 81543
522 81545

14 CFR
39 (3 documents) 81545-81547
71 (2 documents) 81548
95 81549
97 81554
Proposed Rules:
71 81603
300 81604

16 CFR
13 81555

17 CFR
240 81556
241 81558

19 CFR
Proposed Rules:
212 81605

22 CFR
41 81560
Proposed Rules:
181 81606

25 CFR
233 81560

26 CFR
150 81561
Proposed Rules:
51 81606

30 CFR
250 81562

33 CFR
Proposed Rules:
117 81607
162 81607

39 CFR
111 81563

40 CFR
35 81567
Proposed Rules:
52 81608
720 81615

46 CFR
310 81567
Proposed Rules:
33 81616
75 81616
78 81616
94 81616
97 81616
108 81616
160 81616
167 81616
192 81616
196 81616

47 CFR
15 81568
Proposed Rules:
Ch. I 81619

49 CFR
106 81569
107 81569
171 81569
172 81569
173 81569
174 81569
175 81569
176 81569
177 81569
178 81569
301 81573
511 81574
533 81593
Proposed Rules:
392 81621
571 (2 documents) 81624, 81625

50 CFR
33 81600
Proposed Rules:
611 (2 documents) 81633

Rules and Regulations

Federal Register
Vol. 45, No. 240
Thursday, December 11, 1980

This section of the FEDERAL REGISTER contains regulatory documents having general applicability and legal effect, most of which are keyed to and codified in the Code of Federal Regulations, which is published under 50 titles pursuant to 44 U.S.C. 1510.
The Code of Federal Regulations is sold by the Superintendent of Documents. Prices of new books are listed in the first FEDERAL REGISTER issue of each month.

DEPARTMENT OF AGRICULTURE

Agricultural Marketing Service

7 CFR Part 46

Increase in License Fees

AGENCY: Agricultural Marketing Service, USDA.

ACTION: Final rule.

SUMMARY: The Department of Agriculture amends its regulations issued under the Perishable Agricultural Commodities Act of 1930 to increase the fees charged for licenses. It has been determined that the increase in license fees is necessary in order to keep the Perishable Agricultural Commodities Act fund solvent, and produce sufficient revenue needed in order to insure continued and effective administration of the program. The need for the increase is to cover the increased costs of services in compliance with the requirements of the Federal Pay Comparability Act of 1970 and the increased travel expenses associated with the performance of services in the coming fiscal year.

EFFECTIVE DATE: January 1, 1981.

FOR FURTHER INFORMATION CONTACT: Wilbur A. Rife, Head, License Section, Regulatory Branch, Fruit and Vegetable Division, AMS, USDA, Washington, D.C. 20250, Phone (202) 447-2189.

SUPPLEMENTARY INFORMATION: Notice was published in the November 10, 1980, Federal Register (45 FR 74491) that the Department was considering amending § 46.6 of the Regulations (Other than Rules of Practice) (7 CFR Part 46.1—46.45) issued pursuant to the Perishable Agricultural Commodities Act of 1930, as amended, (7 U.S.C. 499a *et seq.*).

In view of the emergency funding situation that existed and pursuant to the provisions of 5 U.S.C. 553(d) (3) and 7 U.S.C. 499(c) (b), it was found that a 30-day period for notice and comment was impracticable and contrary to public interest and that a 15-day period for comment was reasonable. Accordingly, interested parties were given until November 25, 1980, to file written comments on the proposed amendment. No comments were filed on the proposed change.

Background

The Perishable Agricultural Commodities Act was enacted by Congress in 1930, after recognizing the need for a code of fair trading standards to curb abuses in marketing of perishable agricultural commodities in interstate or foreign commerce. It prohibits unfair and fraudulent practices, thereby protecting the growers, shippers, and distributors dealing in those commodities. It established a means for the enforcement of contracts by providing for the collection of damages from anyone who fails to live up to contractual obligations. The law is enforced through a licensing system. All commission merchants, dealers, and brokers engaged in business subject to the Act must be licensed. Since its enactment, the Act has been amended numerous times to keep it in accord with changing trade practices.

The cost of administering the Act is financed entirely through the license fees paid by those engaging in business subject to the law. The Secretary is charged with setting the license fee at a level necessary to meet the expenses of administration within the maximum provided in the law by Congress. Amendments to the Act in 1978, permitted the Secretary to assess a base annual license fee of up to $150 plus an assessment of up to $50 per branch for each branch operation exceeding nine. However, the aggregate annual license fee for any firm cannot exceed $1,000.

The legislative increase of exemptions for certain operators provided in the latest amendments to the Act in 1978 has been one of the major factors in the shrinking of the source of funds for administering the Act by decreasing the number of firms subject to a license. Continued mergers and acquisitions have been common among produce firms of all sizes and have also contributed to the decline in the number of licensees. As a result of this decline, there were 15,630 licensees under the Act at the end of fiscal year 1980 as compared to 16,179 at the end of the 1979 fiscal year. The workload under the program has increased in the past fiscal year with a slightly larger number of complaints being filed requiring substantially more personal investigations. This increase has contributed to increased operation costs even though the number of employees engaged in the Administration of the program has not increased.

The current base annual fee of $135 plus the assessment of $35 for each branch operation in excess of nine has not produced sufficient revenue to absorb the increased cost brought about by the requirements of the Federal Pay Comparability Act of 1970 and the increased travel expenses in connection with the services of the program. In view of the circumstances related above, the Regulations (Other than Rules of Practice) (7 CFR Part 46) under the Act are amended to increase the licensee fees, effective January 1, 1981, in order to keep the PACA fund solvent and produce sufficient revenue needed to continue the effective administration of the program. 7 CFR 46.6 is amended to read as follows:

§ 46.6 License fee.

The annual license fee is one hundred and fifty (150) dollars plus fifty (50) dollars for each branch or additional business facility operated by the applicant exceeding nine. In no case shall the aggregate annual fees paid by any applicant exceed one thousand (1,000) dollars. The Director may require that the fee be submitted in the form of a money order, bank draft, cashier's check, or certified check made payable to the Agricultural Marketing Service. Authorized representatives of the Division may accept fees and issue receipts therefor.

This amendment shall become effective January 1, 1981.

Done at Washington, D.C., on December 3, 1980.

Irving W. Thomas,

Acting Deputy Administrator, Marketing Program Operations.

[FR Doc. 80-38448 Filed 12-10-80; 8:45 am]
BILLING CODE 3410-02-M

Animal and Plant Health Inspection Service

7 CFR Part 319

Foreign Quarantine Notices; Importation of Certain Articles of Chrysanthemum spp. From Canada

AGENCY: Animal and Plant Health Inspection Service, USDA.

ACTION: Final rule.

SUMMARY: This document amends regulations captioned "Subpart—Nursery Stock, Plants, Roots, Bulbs, Seeds, and Other Plant Products" in Chapter III, Title 7 of the Code of Federal Regulations to delete certain certification and post entry quarantine requirements on the importation of articles, other than seeds, of *Chrysanthemum* spp. from Canada. This is necessary as an emergency measure in order to delete unnecessary requirements concerning the importation of such articles of *Chrysanthemum* spp. from Canada. Cut flowers from Canada are not subject to these regulations, and, therefore, this amendment does not affect cut flowers of *Chrysanthemum* spp. from Canada.

DATES: Effective date of this final rule December 11, 1980. Written comments concerning this final rule must be received on or before February 9, 1981.

ADDRESSES: Written comments concerning this final rule should be submitted to: H. V. Autry, Regulatory Support Staff, Plant Protection and Quarantine, Animal and Plant Health Inspection Service, U.S. Department of Agriculture, Federal Building, 6505 Belcrest Road, Room 635, Hyattsville, MD 20782.

FOR FURTHER INFORMATION CONTACT: H. V. Autry, Chief Staff Officer, Regulatory Support Staff, Plant Protection and Quarantine, Animal and Plant Health Inspection Service, U.S. Department of Agriculture, Federal Building, 6505 Belcrest Road, Room 635, Hyattsville, MD 20782, 301-436-8247.

SUPPLEMENTARY INFORMATION:

Classification

This final action has been reviewed under procedures established in Secretary's Memorandum 1955 to implement Executive Order 12044, and has been classified as "not significant."

Emergency Action

The emergency nature of this action warrants publication of this final action without completion of a Final Impact Statement. A Final Impact Statement will be developed after public comments have been received.

Harvey L. Ford, Deputy Administrator of the Animal and Plant Health Inspection Service for Plant Protection and Quarantine, has determined that an emergency situation exists which warrants publication without opportunity for a public comment period on this final action. Due to the finding that unnecesssary requirements are imposed concerning the importation of certain articles of *Chrysanthemum* spp. from Canada a situation exists requiring immediate action to delete such requirements.

Further, pursuant to the administrative procedure provisions in 5 U.S.C. 553, it is found upon good cause that notice and other public procedure with respect to this emergency final action are impracticable and contrary to the public interest; and good cause is found for making this emergency final action effective less than 30 days after publication of this document in the Federal Register. Comments have been solicited for 60 days after publication of this document, and this emergency final action will be scheduled for review so that a final document discussing comments received and any amendments required can be published in the Federal Register as soon as possible.

Written Comments

Interested persons are invited to submit written comments concerning this final rule. Comments should bear a reference to the date and page numbers of this issue of the Federal Register. All written comments made pursuant to this document will be made available for public inspection at the Federal Building, 6505 Belcrest Road, Room 635, Hyattsville, MD 20782, during regular hours of business, 8 a.m. to 4:30 p.m., Monday through Friday, except holidays, in a manner convenient to the public business (7 CFR 1.27(b)).

Background

The regulations in "Subpart—Nursery Stock, Plants, Roots, Bulbs, Seeds, and Other Plant Products" in Title 7, Code of Federal Regulations (7 CFR 319.37 through 319.37-14) published in the Federal Register on May 13, 1980 (45 FR 31572-31597), contain prohibitions and restrictions on the importation of certain classes of nursery stock, and certain other classes of plants, roots, bulbs, seeds, and other plant products. These regulations became effective June 15, 1980.

This document amends the regulations to except from the provisions in §§ 319.37-5(c) and 319.37-7 articles, other than seeds, of *Chrysanthemum* spp. (referred to below as articles of *Chrysanthemum* spp.) imported into the United States from Canada. For informational purposes, it should be noted that cut flowers of *Chrysanthemum* spp. from Canada are not subject to "Subpart-Nursery Stock, Plants, Roots, Bulbs, Seeds, and Other Plant Products," and, therefore, this document does not affect cut flowers of *Chrysanthemum* spp. The restrictions in §§ 319.37-5(c) and 319.37-7 were imposed to prevent the introduction into the United States of the white rust disease (caused by the rust fungus, *Puccinia horiana* P. Henn) which does not occur in the United States, and which can substantially reduce the yield and marketability of articles of *Chrysanthemum* spp. However, these restrictions are not necessary for such purpose with respect to articles of *Chrysanthemum* spp. imported into the United States from Canada.

The regulations provided in § 319.37-5(c) that such an article of *Chrysanthemum* spp. from certain countries and localities, including Canada, was required at the time of importation or offer for importation into the United States to be accompanied by a phytosanitary certificate of inspection containing an accurate additional declaration that such article was grown in a greenhouse nursery and found by the plant protection service of the country of origin to be free from white rust disease (caused by the rust fungus, *Puccinia horiana* P. Henn). This determination was to be based on visual examination of the parent stock, of the articles for importation, and of the greenhouse nursery in which the articles for importation and the parent stock were grown, once a month for 4 consecutive months immediately prior to importation.

The regulations also provided in § 319.37-7 that such an article of *Chrysanthemum* spp. from certain countries and localities, including Canada, was allowed to be imported or offered for importation into the United States only after a completed postentry quarantine agreement had been submitted to Plant Protection and Quarantine providing that the article would be grown under the supervision and control of a person who has signed a postentry quarantine agreement and agreed to comply with the following conditions:

(1) To grow such article or increase therefrom only on specified premises;

(2) To permit an inspector to have access to the specifed premises for inspection of such article during regular business hours;

(3) To keep the article and any increase therefrom identified with a

label showing the name of the article, port accession number, and date of importation;

(4) To keep the article separated from any domestic plant or plant product of the same genus by no less than 3 meters (approximately 10 feet); and from any other imported plant or plant product by the same distance;

(5) To allow or apply remedial measures (including destruction) determined by an inspector to be necessary to prevent the spread of an injurious plant disease, injurious insect pest, or other plant pest;

(6) To notify Plant Protection and Quarantine if any abnormality of the article is found or if the article dies;

(7) To grow the article or increase therefrom only in a greenhouse or other enclosed building; and

(8) To comply with the above conditions for a period of 6 months after importation.

Under the regulations, articles of *Chrysanthemum* spp. from countries and localities where white rust disease is known to occur are designated as prohibited articles and are prohibited from being imported into the United States unless imported by the U.S. Department of Agriculture under stringent conditions for experimental or scientific purposes. This is necessary because otherwise there does not appear to be any feasible method for inspection or treatment, or other measures for preventing the possible introduction into the United States of white rust disease. Articles of *Chrysanthemum* spp. from countries where white rust disease is not known to occur were allowed to be imported into the United States only in accordance with the provisions in §§ 319.37–5(c) and 319.37–7. The white rust disease can be introduced into an area without being readily detected, and can spread very rapidly once it is introduced into an area. Therefore, it was necessary to impose special restrictions on the importation of articles of *Chrysanthemum* spp. from areas where the white rust disease is not known to occur. The provisions in § 319.37–5(c) were imposed to help assure that articles of *Chrysanthemum* spp. imported into the United States were grown in an environment free from white rust disease prior to importation into the United States. However, since the testing procedures under § 319.37–5(c) do not absolutely eliminate the possibility of articles of *Chrysanthemum* spp. becoming infected with white rust disease during the time of such testing, the provision in § 319.37–7 were imposed as a supplemental measure to detect any white rust disease that could have infected the articles during the testing period.

White rust disease does not occur in Canada. The provisions in §§ 319.37–5(c) and 319.37–7 were imposed on the importation into the United States of articles of *Chrysanthemum* spp. from Canada solely because it was thought that the Canadian requirements concerning the importation of articles of *Chrysanthemum* spp. into Canada were not as stringent as the requirements for the importation of such articles into the United States (see 45 FR 31575), and that, consequently, without the imposition of these requirements articles of *Chrysanthemum* spp. imported into the United States from Canada could be a means of introducing white rust disease into the United States.

Importers of articles of *Chrysanthemum* spp. requested that the importation of such articles from Canada be excepted from the provisions of §§ 319.37–5(c) and 319.37–7. Based on this request Plant Protection and Quarantine consulted with officials of Canada Agriculture and were advised that Canada allows the importation of articles of *Chrysanthemum* spp. only from Great Britain where white rust disease does not occur. Furthermore, based on these consultations it has been determined that articles of *Chrysanthemum* spp. are allowed to be imported from Great Britain into Canada only under stringent conditions equivalent to the certification provisions in § 319.37–5(c) and the postentry conditions in § 319.37–7.

Under these circumstances, there is no valid basis for imposing the restrictions set forth in §§ 319.37–5(c) and 319.37–7 on the importation of articles of *Chrysanthemum* spp. from Canada. Accordingly, these restrictions are deleted.

In addition it should be noted that articles of *Chrysanthemum* spp. imported into the United States from Canada are subject to requirements in the regulations, i.e., requirements concerning permits, inspection, phytosanitary certificates of inspection, growing media, approved packing material, marking and identity, arrival notification, prohibited articles accompanying restricted articles, treatment and costs and charges for inspection and treatment, and ports of entry (see 7 CFR 319.37 through 319.37–14).

Amendment of Regulations

Under the circumstances referred to above, the regulations in "Subpart-Nursery Stock, Plants, Roots, Bulbs, Seeds, and Other Plant Products," Chapter III, Title 7 of the Code of Federal Regulations are amended as follows:

§ 319.37–5 [Amended]

1. Section 319.37–5(c) is amended by adding "Canada," immediately before "Republic of South Africa."

§ 319.37–7 [Amended]

2. The list of "Foreign Country(ies) or Locality(ies) from which imported" for the listing of "*Chrysanthemum* spp. (chrysanthemum)" in the chart in § 319.37–7(a) is amended by adding "Canada," immediately before "Europe".

(Sections 5 and 9; 37 Stat. 316 and 318 (7 U.S.C. 159, 162); 37 FR 28464, 28477, as amended; 38 FR 19141))

Done at Washington, D.C., this 8th day of December, 1980.

Harvey L. Ford,

Deputy Administrator, Plant Protection and Quarantine, Animal and Plant Health Inspection Service.

[FR Doc. 80-38412 Filed 12-10-80; 8:45 am]

BILLING CODE 3410-34-M

Federal Crop Insurance Corporation

7 CFR Part 419

[Amdt. No. 2]

Barley Crop Insurance Regulations; Correction

AGENCY: Federal Crop Insurance Corporation, USDA.

ACTION: Final rule; correction.

SUMMARY: This document corrects an error in Amendment 2 to the Barley Crop Insurance Regulations under Appendix B which lists the counties designated for barley crop insurance. This amendment was published in the Federal Register on November 13, 1980 (45 FR 74898).

EFFECTIVE DATE: December 11, 1980.

FOR FURTHER INFORMATION CONTACT: Peter F. Cole, Secretary, Federal Crop Insurance Corporation, U.S. Department of Agriculture, Washington, D.C., 20250, telephone 202–447–3325.

Correction

The Federal Crop Insurance Corporation is correcting Amendment 2 to the Barley Crop Insurance Regulations (7 CFR Part 419) as follows:

On page 74899 (45 FR 74899) under the listing of counties in "Nebraska", delete "Platte", and add "Platte" to the listing of counties in "Wyoming" between "Park" and "Washakie".

Done in Washington, D.C., on December 3, 1980.

Peter F. Cole,

Secretary, Federal Crop Insurance Corporation.

[FR Doc. 80-38364 Filed 12-10-80; 8:45 am]

BILLING CODE 3410-08-M

Agricultural Marketing Service

7 CFR Part 907

[Navel Orange Reg. 500]

Navel Oranges Grown in Arizona and Designated Part of California; Limitation of Handling

AGENCY: Agricultural Marketing Service, USDA.

ACTION: Final rule.

SUMMARY: This regulation establishes the quantity of fresh California-Arizona navel oranges that may be shipped to market during the period December 12–December 18, 1980. Such action is needed to provide for orderly marketing of fresh navel oranges for this period due to the marketing situation confronting the orange industry.

EFFECTIVE DATE: December 12, 1980.

FOR FURTHER INFORMATION CONTACT: Malvin E. McGaha, 202-447-5975.

SUPPLEMENTARY INFORMATION: *Findings.* This regulation is issued under the marketing agreement, as amended, and Order No. 907, as amended (7 CFR Part 907), regulating the handling of navel oranges grown in Arizona and designated part of California. The agreement and order are effective under the Agricultural Marketing Agreement Act of 1937, as amended (7 U.S.C. 601–674). This action is based upon the recommendations and information submitted by the Navel Orange Administrative Committee and upon other available information. It is hereby found that this action will tend to effectuate the declared policy of the act.

This action is consistent with the marketing policy for 1980–81 which was designated significant under the procedures of Executive Order 12044. The marketing policy was recommended by the committee following discussion at a public meeting on October 14, 1980. A final impact analysis on the marketing policy is available from Malvin E. McGaha, Chief, Fruit Branch, F&V, AMS, USDA, Washington, D.C. 20250, telephone 202-447-5975.

The committee met again publicly on December 9, 1980 at Los Angeles, California, to consider the current and prospective conditions of supply and demand and recommended a quantity of navels deemed advisable to be handled during the specified week. The committee reports the demand for navel oranges is good.

It is further found that there is insufficient time between the date when information became available upon which this regulation is based and when the action must be taken to warrant a 60-day comment period as recommended in E.O. 12044, and that it is impracticable and contrary to the public interest to give preliminary notice, engage in public rulemaking, and postpone the effective date until 30 days after publication in the Federal Register (5 U.S.C. 553). It is necessary to effectuate the declared purposes of the act to make these regulatory provisions effective as specified, and handlers have been apprised of such provisions and the effective time.

1. Section 907.800 is added as follows:

§ 907.800 Navel Orange Regulation 500.

Order. (a) The quantities of navel oranges grown in Arizona and California which may be handled during the period December 12, 1980, through December 18, 1980, are established as follows:

(1) District 1: 1,536,000 cartons;
(2) District 2: unlimited cartons;
(3) District 3: unlimited cartons;
(4) District 4: unlimited cartons;

(b) As used in this section, "handled," "District 1," "District 2," "District 3," "Districe 4," and "carton" mean the same as defined in the marketing order.

(Secs. 1–19, 48 Stat. 31, as amended; 7 U.S.C. 601–674)

Dated: December 10, 1980

D. S. Kuryloski,

Director, Fruit and Vegetable Division, Agricultural Marketing Service.

[FR Doc. 80-38700 Filed 12-10-80; 11:48 am]

BILLING CODE 3410-02-M

7 CFR Part 989

Raisins Produced From Grapes Grown in California Free and Reserve Percentages for the 1980-81 Crop Year

AGENCY: Agricultural Marketing Service, USDA.

ACTION: Final rule.

SUMMARY: This rule designates final marketing percentages for Natural (sun-dried) Seedless and Dipped and Related Seedless raisins from California's 1980 production. The estimated 1980 production of these raisins is in excess of domestic and Western Hemisphere market needs. The percentages are intended to tailor the supply to these needs. Excess supplies would be available primarily for export to approved countries outside the Western Hemisphere.

EFFECTIVE DATES: August 1, 1980 through July 31, 1981.

FOR FURTHER INFORMATION CONTACT: J. S. Miller, Chief, Specialty Crops Branch, Fruit and Vegetable Division, AMS, USDA, Washington, D.C. 20250 (202) 447-5053. The Final Impact Statement describing the options considered in developing this proposal and the impact of implementing each option is available on request from J. S. Miller.

SUPPLEMENTARY INFORMATION: This action has been reviewed under USDA procedures established in Secretary's Memorandum 1955 to implement Executive Order 12044 and has been classified "non-significant." On November 14, 1980, notice was published in the Federal Register (45 FR 45220) inviting written comments, not later than November 28, 1980, on the proposed designation of preliminary free tonnage percentages for Natural (sun-dried) Seedless and Dipped and Related Seedless raisins of 56 percent and 39 percent, respectively, for the 1980–81 crop year. Also proposed for that crop year were preliminary reserve tonnage percentages for those raisins of 44 percent and 61 percent, respectively. The 1980–81 crop year began August 1, 1980. No comments were received.

It is found that good cause exists for not postponing the effective date of this action until 30 days after publication in the Federal Register (5 U.S.C. 553) in that: (1) The relevant provisions of Part 989 require that the percentages designated herein for the 1980–81 crop year apply to all standard Natural (sun-dried) Seedless and Dipped and Related Seedless raisins acquired by handlers from the beginning of that crop year; (2) handlers are marketing 1980 crop raisins and this action must be taken promptly to achieve its purpose of making the full free tonnage computed for these varietal types available to handlers; (3) handlers are aware of this action as recommended by the Raisin Administrative Committee (Committee) at an open meeting and require no additional time to comply; and (4) this action relieves restrictions on handlers.

These final marketing percentage designations would be pursuant to § 989.55 of the marketing agreement and Order No. 989, both as amended (7 CFR Part 989), regulating the handling of raisins produced from grapes grown in California, hereinafter referred to collectively as the "order". The order is

effective under the Agricultural Marketing Agreement Act of 1937, as amended (7 U.S.C. 601–674). The proposal was recommended under § 989.54(b) by the Committee, established under the order as the agency to work with USDA in administering the order.

Under § 989.54(b) of the order, the Committee is required to recommend, on or before October 5, a preliminary free tonnage percentage for any varietal type of raisin for which free tonnage has been computed. Free tonnages were computed for Natural (sun-dried) Seedless and Dipped and Related Seedless raisins. If the Committee determines that the field price is firmly established for a particular varietal type, the Committee is required to recommend a preliminary free tonnage percentage which, when applied to the estimated production of that varietal type, would release 85 percent of the computed free tonnage for that varietal type.

No later than February 15, the Committee is required to recommend free tonnage percentages which, when applied to the final production estimate, will tend to release the full free tonnage for any varietal type. Section 989.54(b) also provides that any difference between the free tonnage percentage and 100 percent shall be the reserve percentage.

On November 12, 1980, the Committee recommended final free and reserve percentages for the 1980–81 crop year, and made its final 1980 production estimates for Natural (sun-dried) Seedless and Dipped and Related Seedless raisins.

The Committee estimated the 1980 production of Natural (sun-dried) Seedless raisins at 256,746 natural condition tons (254 tons less than its preliminary estimate of 257,000 natural condition tons). Dividing the computed free tonnage of 170,917 natural conditions tons by the estimated production and rounding to the nearest full precent results in a final free percentage of 67 percent (and a final reserve percentage of 33 percent).

For Dipped and Related Seedless raisins, the Committee estimated the 1980 production to be 25,003 natural condition tons (1,003 tons more than its preliminary estimate of 24,000 tons). Dividing the computed free tonnage of 11,132 natural conditions tons by the estimated production and roundng to the nearest full percent results in a final free percentage of 45 percent (and a final reserve percentage of 55 percent).

After consideration of all relevant matter presented, including that in the notice, the information and recommendations submitted by the Committee, and other available information, it is found that the designation under § 989.55 of the free and reserve precentages for Natural (sun-dried) Seedless and Dipped and Related Seedless raisins, set forth below, will tend to effectuate the declared policy of the act.

Therefore, § 989.234 is added to Subpart-Supplementary Regulations (7 CFR 989.210–989.233; 45 FR 75165). Section 989.234 reads as follows:

§ 989.234 Free and reserve percentages for the 1980–81 crop year.

The precentages of standard Natural (sun-dried) Seedless and Dipped and Related Seedless raisins acquired by handlers during the crop year beginning August 1, 1980, which shall be free tonnage and reserve tonnage, respectively, are designated as follows:

	Free percentage	Reserve percentage
Natural (sun-dried) Seedless	67	33
Dipped and Related Seedless	45	55

(Secs. 1–19, 48 Stat. 31, as amended; 7 U.S.C. 601–674)

Dated: December 8, 1980.

D. S. Kuryloski,

Deputy Director, Fruit and Vegetable Division.

[FR Doc. 80-38431 Filed 12-10-80 8:45 am]

BILLING CODE 3410-02-M

Commodity Credit Corporation

7 CFR Part 1421

[Amendment 4]

Regulations Governing the Grain Reserve Program for 1979 and Subsequent Crops and Alternative Program for 1979 and Prior Crops

AGENCY: Commodity Credit Corporation, USDA.

ACTION: Final rule.

SUMMARY: The purpose of this rule is to amend the regulations governing the farmer-owned Grain Reserve Program for 1979 and Subsequent Crops and Alternative Program for 1979 and Prior Crops, to provide the Secretary the option of not calling commodity loans under certain conditions.

DATES: Effective date: This regulation shall become effective December 10, 1980.

COMMENT DATE: Comments must be received on or before February 9, 1981.

ADDRESS: Director, Price Support and Loan Division, ASCS, USDA, P.O. Box 2415, Washington, D.C. 20013.

FOR FURTHER INFORMATION CONTACT: H. E. Maynard, Price Support and Loan Division, ASCS, P.O. Box 2415, Washington, D.C. 20013, 202/447-7973. A Final Impact Statement will be available from the above-named individual.

SUPPLEMENTARY INFORMATION: This final action has been reviewed under procedures established in Secretary's Memorandum 1955 to implement Executive Order 12044, and has been classified as "significant." The emergency nature of this action warrants publication of this final action without completion of a Draft Impact Analysis. A Final Impact Statement will be developed after public comments have been received.

The Secretary has determined that an emergency situation exists which warrants publication without opportunity for a public comment period of this final action because the national average market price of corn is above the call level for Reserves II and III and under the current regulations the corn reserves will be called. The international situation indicates that for market stability it may not be in the best interest of farmers and the nation to force the approximately 570 million bushels of corn in Reserves II and III into the marketing channels at this time.

Further, pursuant to the administration procedure provisions in 5 U.S.C. 553 and Executive Order 12044, it is found upon good cause that notice and other public procedure with respect to this emergency final action are impracticable and contrary to the public interest; and good cause is found for making this emergency final action effective less than 30 days after publication of this document in the Federal Register. Comments will be received for 60 days after publication of this document, and this emergency final action will be scheduled for review so that a final document discussing comments received and any amendments required can be published in the Federal Register as soon as possible.

Title Grain Reserve Program, Number 10.067 from Catalog of Federal Domestic Assistance. This action will not have a significant impact specifically on area and community development. Therefore, review as established by OMB Circular A-95 was not used to assure that units of local government are informed of this action.

Section 1421.643(b) of the regulations currently provides that a commodity loan will be called when the five-day national average market price is at or above call level for five consecutive market days. This change is necessary to avoid a call that could result from erratic temporary market influences. This rule provides the Secretary the option of not calling commodity loans if on any day during the five consecutive market day period the one-day adjusted national average market price falls below the call level.

Accordingly, the regulations at 7 CFR 1421.643(b) are amended to read as follows:

§ 1421.643 Release levels, redemption requirements, and early redemption charges.

* * * * *

(b) *Call level.* The national average market price shall be determined to be at the call level when the national average market price is at least 185 percent of the then current national average loan rate for wheat or 145 percent of the then current national average loan rate for feed grains.

(1) CCC will determine that the national average market price is at call level and will call the loans when the moving average AMS market price as determined in the same manner as prescribed for release levels in § 1421.643(a) is at or above such level for five consecutive market days: *Provided, however,* that if on any one of the five consecutive market days the one-day national average market price adjusted downward by the difference between the mid-month ESCS price and the mid-month AMS price as determined in accordance with § 1421.643(a) falls below the call level, the Secretary may determine that the commodity loans will not be called. If a commodity loan is called and the loan is not redeemed within 90 days after notification, CCC may take title to the commodity.

(2) Notwithstanding any provision of this subpart, with respect to loans called under paragraph (b)(1) of this section, the Secretary may provide producers the options of (i) delaying their date for settlement of such loans for a period of 30 days and such additional 30-day periods as determined necessary by the Secretary in areas when the Secretary determines conditions exist which disrupt orderly marketing of the commodity under loan, and (ii) reentering the loan into the reserve loan program under all the original terms and conditions if subsequent to such loan call the national average market price of the loan commodity falls below the release level applicable to the loan commodity.

* * * * *

Signed at Washington, D.C. on December 8, 1980.

Jim Williams,

Acting Secretary.

[FR Doc. 80-38361 Filed 12-10-80; 8:45 am]

BILLING CODE 3410-05-M

---

7 CFR Part 1421

[Amendment 1]

Regulations Governing the Grain Reserve Program for 1980 and Subsequent Crops and Alternative Program for 1980 and Prior Crops

AGENCY: Commodity Credit Corporation, USDA.

ACTION: Final rule.

SUMMARY: The purpose of this rule is to amend the regulations governing the farmer-owned Grain Reserve Program for 1980 and Subsequent Crops and Alternative Program for 1980 and Prior Crops, to provide the Secretary the option of not calling commodity loans under certain conditions.

DATES: Effective date: This regulation shall become effective December 10, 1980.

COMMENT DATE: Comments must be received on or before February 9, 1981.

ADDRESS: Director, Price Support and Loan Division, ASCS, USDA, P.O. Box 2415, Washington, D.C. 20013.

FOR FURTHER INFORMATION CONTACT: H. E. Maynard, Price Support and Loan Division, ASCS, P.O. Box 2415, Washington, D.C. 20013, 202/447-7973. A Final Impact Statement will be available from the above-named individual.

SUPPLEMENTARY INFORMATION: This final action has been reviewed under procedures established in Secretary's Memorandum 1955 to implement Executive Order 12044, and has been classified as "significant." The emergency nature of this action warrants publication of this final action without completion of a Draft Impact Analysis. A Final Impact Statement will be developed after public comments have been received.

The Secretary has determined that an emergency situation exists which warrants publication without opportunity for a public comment period of this final action because the national average market price of corn is above the call level for Reserves II and III and under the current regulations the corn reserves will be called. The international situation indicates that for market stability it may not be in the best interest of farmers and the nation to force the approximately 570 million bushels of corn in Reserves II and III into the marketing channels at this time.

Further, pursuant to the administration procedure provisions in 5 U.S.C. 553 and Executive Order 12044, it is found upon good cause that notice and other public procedure with respect to this emergency final action are impracticable and contrary to the public interest; and good cause is found for making this emergency final action effective less than 30 days after publication of this document in the Federal Register. Comments will be received for 60 days after publication of this document, and this emergency final action will be scheduled for review so that a final document discussing comments received and any amendments required can be published in the Federal Register as soon as possible.

Title Grain Reserve Program, Number 10.067 from Catalog of Federal Domestic Assistance. This action will not have a significant impact specifically on area and community development. Therefore, review as established by OMB Circular A-95 was not used to assure that units of local government are informed of this action.

Section 1421.683(b) of the regulations currently provides that a commodity loan will be called when the five-day national average market price is at or above call level for five consecutive market days. This change is necessary to avoid a call that could result from erratic temporary market influences. This rule provides the Secretary the option of not calling commodity loans if on any day during the five consecutive market day period the one-day adjusted national average market price falls below the call level.

Accordingly, the regulations at 7 CFR 1421.683(b) are amended to read as follows:

§ 1421.683 Release levels, redemption requirements, and early redemption charges.

* * * * *

(b) *Call level.* The national average market price shall be determined to be at the call level when the national average market price is at least 175 percent of the then current national average loan rate for wheat or 145 percent of the then current national average loan rate for feed grains.

(1) CCC will determine that the national average market price is at call level and will call the loans when the moving average AMS market price as determined in the same manner as prescribed for release levels in

§ 1421.683(a) is at or above such level for five consecutive market days: *Provided, however,* that if on any one of the five consecutive market days the one-day national average market price adjusted downward by the difference between the mid-month ESCS price and the mid-month AMS price as determined in accordance with § 1421.683(a) falls below the call level, the Secretary may determine that the commodity loans will not be called. If a commodity loan is called and the loan is not redeemed within 90 days after notification, CCC may take title to the commodity.

(2) Notwithstanding any provision of this subpart, with respect to loans called under paragraph (b)(1) of this section, the Secretary may provide producers the options of (i) delaying their date for settlement of such loans for a period of 30 days and such additional 30-day periods as determined necessary by the Secretary in areas when the Secretary determines conditions exist which disrupt orderly marketing of the commodity under loan, and (ii) entering the unsettled loan into a subsequent reserve loan program if during the 90-day settlement period the national average market price of the loan commodity falls below the release level applicable to the loan commodity.

* * * * *

Signed at Washington, D.C. on December 5, 1980.

Jim Williams,

Acting Secretary.

[FR Doc. 80-38360 Filed 12-10-80; 8:45 am]

BILLING CODE 3410-05-M

DEPARTMENT OF JUSTICE

Immigration and Naturalization Service

8 CFR Part 238

Contracts With Transportation Lines; Addition of Wardair Canada (1975) Ltd.

AGENCY: Immigration and Naturalization Service, Justice.

ACTION: Final rule.

SUMMARY: This is an amendment to the regulations of the Immigration and Naturalization Service to add a carrier to the list of transportation lines which have entered into agreement with the Commissioner of Immigration and Naturalization to guarantee the preinspection of their passengers and crews at places outside the United States. This amendment is necessary because transportation lines which have signed such agreements are published in the Service's regulations.

EFFECTIVE DATE: November 20, 1980.

FOR FURTHER INFORMATION CONTACT: Stanley J. Kieszkiel, Acting Instructions Officer, Immigration and Naturalization Service, 425 I Street NW., Washington, DC 20536, Telephone: (202) 633-3048.

SUPPLEMENTARY INFORMATION: This amendment to 8 CFR 238.4 is published pursuant to section 552 of Title 5 of the United States Code (80 Stat. 383), as amended by Pub. L. 93-502 (88 Stat. 1561) and the authority contained in section 103 of the Immigration and Nationality Act (8 U.S.C. 1103), 28 CFR 0.105(b) and 8 CFR 2.1. Compliance with the provisions of section 553 of Title 5 of the United States Code as to notice of proposed rulemaking and delayed effective date is unnecessary because the amendment contained in this order adds a transportation line to the listing and is editorial in nature.

The Commissioner of the Immigration and Naturalization Service entered into an agreement with the following named carrier on the date indicated to guarantee the preinspection of its passengers and crew at a place outside of the United States under section 238(b) of the Immigration and Nationality Act and 8 CFR Part 238:

Wardair Canada (1975) Ltd. Effective date: November 20, 1980.

Accordingly, Chapter I of Title 8 of the Code of Federal Regulations is amended as follows:

PART 238—CONTRACTS WITH TRANSPORTATION LINES

§ 238.4 [Amended]

Section 238.4 *Preinspection outside the United States,* the listing of transportation lines preinspected at Vancouver is amended by adding in alphabetical sequence "Wardair Canada (1975) Ltd.".

(Secs. 103, 238(d) (8 U.S.C. 1103, 1228(b)))

Dated: December 6, 1980.

David Crosland,

Acting Commissioner of Immigration and Naturalization.

[FR Doc. 80-38450 Filed 12-10-80; 8:45 am]

BILLING CODE 4410-10-M.

DEPARTMENT OF AGRICULTURE

Animal and Plant Health Inspection Service

9 CFR Part 82

Exotic Newcastle Disease; and Psittacosis or Ornithosis in Poultry; Areas Released From Quarantine

AGENCY: Animal and Plant Health Inspection Service, USDA.

ACTION: Final rule.

SUMMARY: The purpose of these amendments is to release a portion of Kansas City County in Missouri, a portion of Maricopa County in Arizona, a portion of Atlanta County in Georgia, a portion of Multnomah County in Oregon, a portion of Pierce County in Washington, and a portion of Caddo Parish in Louisiana from areas quarantined because of exotic Newcastle disease. Surveillance activity indicates that exotic Newcastle disease no longer exists in the areas quarantined.

EFFECTIVE DATE: December 5, 1980.

FOR FURTHER INFORMATION CONTACT: C. G. Mason, Chief, National Emergency Field Operations, Emergency Programs, Veterinary Services, USDA, 6505 Belcrest Road, Federal Building, Room 751, Hyattsville, MD 20782, 301-436-8073.

SUPPLEMENTARY INFORMATION: These amendments exclude a portion of Kansas City County in Missouri, a portion of Maricopa County in Arizona, a portion of Atlanta County in Georgia, a portion of Multnomah County in Oregon, a portion of Pierce County in Washington, and a portion of Caddo Parish in Louisiana from the areas quarantined because of exotic Newcastle disease under the regulations in 9 CFR Part 82, as amended. Therefore, the restrictions pertaining to the interstate movement of poultry, mynah and psittacine birds, and birds of all other species under any form of confinement, and their carcasses and parts thereof, and certain other articles from quarantined areas, as contained in 9 CFR Part 82, as amended, will not apply to the excluded areas.

Accordingly, Part 82, Title 9, Code of Federal Regulations, is hereby amended in the following respects.

§ 82.3 [Amended]

1. In § 82.3(a)(4), relating to the State of Missouri, paragraph (iii) relating to the premises of Wildwood Decorators (Richard Spaeth), 10003 East 6th Street, Raytown, Kansas City County is deleted.

* * * * *

2. In § 82.3(a)(8), relating to the State of Arizona, paragraph (i) relating to the premises of Scottsdale Bird Sales, 8403 North 75th Street, Scottsdale, Maricopa County is deleted.

* * * * *

3. In § 82.3(a)(15), relating to the State of Georgia, paragraph (i) relating to the premises of Cady Management, Inc.,

3880 Oakcliff Industrial Court, Doraville, Atlanta County is deleted.

* * * * *

4. In § 82.3(a)(17), relating to the State of Oregon, paragraph (iv) relating to the premises of Safari Pets and Supplies, Inc., 60 S.W. 5th Avenue, Portland, Multnomah County is deleted.

* * * * *

5. In § 82.3(a)(19), relating to the State of Washington, paragraph (i) relating to the premises of F.G. (Garry) Marr, dba Brig-O-Dune Pet Center, 2319 Point Fosdick Drive, N.W., Gig Harbor, Pierce County is deleted.

* * * * *

6. In § 82.3(a)(21), relating to the State of Louisiana, paragraph (i) relating to the premises of Docktor's Pet Center (Joe Hedl), South Park Mall #37 and 3016 Greenwood, Shreveport, Caddo Parish is deleted.

(Secs. 4–7, 23 Stat. 32, as amended; secs. 1 and 2, 32 Stat. 791–792, as amended; secs. 1–4, 33 Stat. 1264, 1265, as amended; secs. 3 and 11, 76 Stat. 130, 132; (21 U.S.C. 111–113, 115, 117, 120, 123–126, 134b, 134f); 37 FR 28464, 28477; 38 FR 19141)

These amendments relieve certain restrictions no longer deemed necessary to prevent the spread of exotic Newcastle disease, and must be made effective immediately to be of maximum benefit to affected persons. It does not appear that public participation in this rulemaking proceeding would make additional relevant information available to the Department.

Therefore, pursuant to the administrative procedure provisions in 5 U.S.C. 553, it is found upon good cause that notice and other public procedure with respect to this final rule are impracticable and contrary to the public interest and good cause is found for making this final rule effective less than 30 days after publication of this document in the Federal Register.

Further, this final rule has not been designated as "significant," and is being published in accordance with the emergency procedures in Executive Order 12044 and Secretary's Memorandum 1955. It has been determined by E. C. Sharman, Acting Assistant Deputy Administrator, Animal Health Programs, APHIS, VS, USDA, that the emergency nature of this final rule warrants publication without opportunity for prior public comment or preparation of an impact analysis statement at this time.

This final rule implements the regulations in Part 82. It will be scheduled for review in conjunction with the periodic review of the regulations in that part required under the provisions of Executive Order 12044 and Secretary's Memorandum 1955.

Done at Washington, D.C., this 5th day of December 1980.

R. P. Jones,

Acting Deputy Administrator, Veterinary Services.

[FR Doc. 80-38319 Filed 12-10-80; 8:45 am]

BILLING CODE 3410-34-M

FEDERAL RESERVE SYSTEM

12 CFR Part 204

[Regulation D; Docket No. R-0336]

Reserve Requirements of Depository Institutions

AGENCY: Board of Governors of the Federal Reserve System.

ACTION: Final rule and technical amendments.

SUMMARY: The Board of Governors of the Federal Reserve System has amended its Regulation D—Reserve Requirements of Depository Institutions (12 CFR Part 204) which imposes Federal reserve requirements on depository institutions that maintain transaction accounts or nonpersonal time deposits. Under the amendment, a depository institution may permit a depositor to effect three or less telephone or preauthorized transfers from an account during a statement cycle or similar period of at least four weeks without subjecting such account to reserve requirements on transaction accounts. At present, the relevant period for determining the permissible number of transfers is a calendar month. This action will reduce the burden of and cost of compliance with Regulation D.

EFFECTIVE DATE: December 1, 1980.

FOR FURTHER INFORMATION CONTACT: Gilbert T. Schwartz, Assistant General Counsel (202/452–3625), Paul S. Pilecki, Attorney (202/452–3281), or Paige Winebarger, Attorney (202/452–3265), Legal Division, Board of Governors of the Federal Reserve System, Washington, D.C. 20551.

SUPPLEMENTARY INFORMATION: The Monetary Control Act of 1980 (Title I of Pub. L. 96–221) ("Act") authorizes the Federal Reserve to impose reserve requirements solely for the purpose of conducting monetary policy on all depository institutions that maintain transaction accounts or nonpersonal time deposits. Depository institutions subject to reserve requirements include any Federally-insured commercial or savings bank, or any such bank that is eligible to become insured by the Federal Deposit Insurance Corporation; any mutual or stock savings bank; any savings and loan association that is a member of a Federal Home Loan Bank, insured by, or eligible to apply for insurance with, the Federal Savings and Loan Insurance Corporation; and any credit union that is insured by, or eligible to apply for insurance with, the National Credit Union Administration Board. The reserve requirements of the Act also apply to United States branches of foreign banks, to United States agencies of foreign banks with total worldwide consolidated bank assets in excess of $1 billion, and to Edge and Agreement Corporations.

The revised Regulation D which became effective on November 13, 1980, implements the provisions of the Act. Under Regulation D, the definition of "transaction account" includes accounts under the terms of which, or which by practice of the depository institution, the depositor is permitted or authorized to make more than three withdrawals per calendar month for purposes of transferring funds to another account or for making a payment to a third party by means of preauthorized or telephone agreement, order or instruction. The Board adopted the three-transfer per calendar month rule so that institutions could continue to offer services to enable depositors to effect occasional transfers, particularly in situations such as when a depositor is unable to get to the depository institution to conduct business or where there are inadvertent overdrafts in a checking account which a customer wishes to cover with funds from another account. Recent comments from depository institutions indicate that account records at many institutions are maintained on the basis of statement cycles which, although they approximate a one-month period, do not necessarily coincide with a calendar month. However, in order to comply with the regulation, institutions would be required to change automated or operational procedures to monitor activity from the first day of the month to the last day of a month. By allowing an institution to adopt a statement cycle or any other period of at least four weeks, the purpose behind the three transfer rule is still served. Moreover, the operational costs to an institution are minimized, since its basic record-keeping cycle can be used as the appropriate time frame for limiting the number of telephone or preauthorized transfers from an account.

The Board believes that this amendment will reduce the burden to depository institutions of compliance with Regulation D. Consequently, the Board, for good cause finds that the

notice and public procedure provisions of 5 U.S.C. § 553(b) with regard to this action are impracticable and contrary to the public interest. Since the amendment relieves a regulatory restriction, deferral of the effective date pursuant to 5 U.S.C. § 553(d) is not necessary. In addition, several technical amendments to Regulation D have been made.

Effective December 1, 1980, pursuant to the Board's authority under section 19 of the Federal Reserve Act (12 U.S.C. § 461 *et seq.*), Regulation D (12 CFR Part 204) is amended as follows:

1. In § 204.2(e)(6), the second sentence is amended to read as set forth below:

§ 204.2 Definitions.

* * * * *

(e) *"Transaction account"* * * *

(6) * * * An account that permits or authorizes more than three such withdrawals in a calendar month, or statement cycle (or similar period) of at least four weeks, is a "transaction account" whether or not more than three such withdrawals actually are made during such period. * * *

* * * * *

2. In § 204.2(b)(1)(vii), by inserting the word "which" after the words "withdrawal period has expired and" and before the words "have not been renewed."

§ 204.3 Computation and maintenance.

3. In § 204.3(a), the third sentence is revised by deleting "$5 million" and inserting in its place "$15 million".

4. In § 204.3(a), subparagraphs (1)(ii) and (2)(ii) are revised to read as follows:

(a) *Maintenance of required reserves.*

* * *

(1) *United States branches and agencies of foreign banks.*

(i) * * *

(ii) * * * if the low reserve tranche cannot be fully utilized by a single office or by a group of offices filing a single report of deposits, the unused portion of the tranche may be assigned to other offices of the same foreign bank until the amount of the tranche is exhausted. The foreign bank shall determine this assignment subject to the restriction that if a portion of the tranche is assigned to an office in a particular State, any unused portion must first be assigned to other offices located within the same State and within the same Federal Reserve District, that is, to other offices included on the same aggregated report of deposits. If necessary in order to avoid under-utilization of the low reserve tranche, the allocation may be changed at the beginning of a calendar month. Under other circumstances, the low reserve tranche may be reallocated at the beginning of a calendar year.

(2) *Edge and Agreement Corporations.*

(i) * * *

(ii) * * * If the low reserve tranche cannot be fully utilized by a single office or by a group of offices filing a single report of deposits, the unused portion of the tranche may be assigned to other offices of the same institution until the amount of the tranche is exhausted. An Edge or Agreement Corporation shall determine this assignment subject to the restriction that if a portion of the tranche is assigned to an office in a particular State, any unused portion must first be assigned to other offices located within the same State and within the same Federal Reserve District, that is, to other offices included on the same aggregated report of deposits. If necessary in order to avoid under-utilization of the low reserve tranche, the allocation may be changed at the beginning of a calendar month. Under other circumstances, the low reserve tranche may be reallocated at the begining of a calendar year.

* * * * *

§ 204.4 [Amended]

5. In § 204.4(b) (1)(ii) and (2)(ii), by deleting the word "exceeds" and inserting in its place "exceed".

6. In § 204.4(b)(2), by deleting the parentheses that appear around the phrase "than its required reserves computed using the reserve ratios in effect on August 31, 1980."

7. In § 204.4(g)(2)(iv), by deleting the phrase "daily average vault cash" and inserting "daily average total required reserves" in both places that it appears.

8. In § 204.6(b)(1), by deleting the word "on" which appears after the word "imposed" and before the word "for."

By order of the Board of Governors, December 5, 1980.

Theodore E. Allison,

Secretary of the Board.

[FR Doc. 80-38434 Filed 12-10-80; 8:45 am]

BILLING CODE 6210-01-M

---

12 CFR Part 211

[Reg. K; Docket No. R-0291]

Nonbanking Activities of Foreign Banking Organizations

AGENCY: Board of Governors of the Federal Reserve System.

ACTION: Final rule.

SUMMARY: Foreign banks that have branches, agencies, or commercial lending company subsidiaries in the U.S., companies controlling such foreign banks, and foreign companies that have bank subsidiaries in the U.S. are subject to the nonbanking prohibitions of the Bank Holding Company Act (12 U.S.C. 1841 et seq.). That Act also affords exemptions from the nonbanking prohibitions for qualifying foreign organizations. The Board has adopted amendments to Regulation K (International Banking Operations) to implement and interpret these exemptions.

DATE: January 3, 1981. In view of the modifications made to the proposal, comments will be accepted on the amendments until January 30, 1981.

ADDRESS: Comments, which should refer to Docket No. R-0291, may be mailed to Theodore E. Allison, Secretary, Board of Governors of the Federal Reserve System, 20th Street and Constitution Avenue, NW., Washington, D.C. 20551, or delivered to Room B-2223 between 8:45 a.m. and 5:15 p.m. Comments received may be inspected at Room B-1122 between 8:45 a.m. and 5:15 p.m., except as provided in § 261.6(a) of the Board's Rules Regarding Availability of Information (12 CFR 261.6(a)).

FOR FURTHER INFORMATION CONTACT: C. Keefe Hurley, Jr., Senior Counsel (202/452-3269), Kathleen M. O'Day, Attorney (202/452-3786), Legal Division; or Michael G. Martinson, Senior Financial Analyst, Division of Banking Supervision and Regulation (202/452-3621), Board of Governors of the Federal Reserve System.

SUPPLEMENTARY INFORMATION: Section 8(a) of the International Banking Act of 1978 (12 U.S.C. 3101 et seq.) ("IBA") provides that a foreign bank that does business in the United States through a branch, agency or commercial lending company shall be subject to the provisions of the Bank Holding Company Act ("BHCA") in the same manner and to the same extent as a bank holding company. Companies that own such foreign banks are also subject to the provisions of the BHCA. Foreign banks and companies that control U.S. banks are "bank holding companies" and, therefore, subject to the nonbanking prohibitions of the BHCA.

In order to limit its extraterritorial effect on foreign organizations, the BHCA affords these organizations two exemptions from the nonbanking prohibitions. Section 4(c)(9) grants the Board discretion to permit a foreign company to engage in any activity or make any investment that the Board determines is in the public interest and not substantially at variance with the purposes of the BHCA. This exemption is currently implemented by § 225.4(g) of the Board's Regulation Y (12 CFR 225.4(g)). Section 2(h) permits a foreign institution principally engaged in the

banking business outside the United States to hold shares of foreign nonbanking companies that engage in business in the United States.

On May 1, 1980, the Board requested public comment on proposed amendments to Regulation K to implement and interpret these provisions of the BHCA (45 FR 30082). The period for public comment expired on July 31, 1980. After consideration of the 29 comments received, including some representing a number of banks, the Board adopted the amendments with some modifications to the rules as proposed. These modifications relate to the definition of "qualifying foreign banking organization," the test for determining eligibility for qualified status, and the types of activities that may be engaged in in the United States. The Board will accept public comment on these modifications to the regulation until January 30, 1981. In addition to the changes referred to above, technical modifications were also made to the proposal.

Qualifying foreign organizations. The Board proposed that a foreign organization would qualify for the exemption if more than 50 per cent of its worldwide consolidated business were banking and more than 50 per cent of its banking business were outside the United States. The Board was of the opinion that this interpretation of "principally engaged in the banking business outside the U.S." served the Board's supervisory purposes in ensuring that an organization that qualified for the exemptions was principally foreign and would serve as a source of strength to its U.S. banking operations.

Some comments stated that the Board should not impose the "engaged in banking" test, which is derived from section 2(h), in order for an organization to qualify for exemptions granted under section 4(c)(9) since there is no statutory requirement for so doing. However, since the purposes of the two sections are the same and the Board has the same supervisory objectives in interpreting the exceptions, the Board has adopted the proposal to require the same test for eligibility for both exemptive provisions.

One comment strongly objected to the inclusion of U.S. banking operations in determining whether an organization is principally engaged in banking. This comment stated that an otherwise ineligible institution could "bootstrap" itself into qualification for the exemptions by acquisition of a U.S. subsidiary bank. Although the Board believes that this particular situation could be scrutinized in connection with the approval procedure under the BHCA, the Board also is of the view that the comment has merit from a supervisory standpoint. There may be circumstances in which an organization that must rely on its U.S. banking business to qualify under the "principally engaged in banking" test should not be entitled to the use of the exemptions without closer scrutiny by the Board. Therefore, the Board has adopted the proposal that, in order to be considerd principally engaged in the banking business outside the United States, more than half of an organization's worldwide business, exclusive of its U.S. banking business, must derive from banking outside the United States. Those organizations that fail to qualify under this standard may apply for a specific determination of eligibility, described below. The Board also will accept comment on this amendment from interested parties.

Definition of "banking business". Under the IBA, a foreign bank with a U.S. branch or agency is subject to the nonbanking prohibitions of the BHCA. "Foreign bank" is defined in section 1(b)(7) of the IBA as including, in addition to companies that engage in the business of banking, "foreign commercial banks, foreign merchant banks *and other foreign institutions that engage in banking activities usual in connection with the business of banking in the countries where such foreign institutions are organized.*" (Emphasis added). Because this definition includes organizations considered "banks" by virture of activities conducted that are usual in connection with banking activities in their home countries, the board proposed to treat as "banking" the activities in § 211.5(d) of Regulation K (12 CFR 211.5(d)) that have been determined to be usual in connection with banking or financial operations abroad. This provision occasioned little comment and therefore is adopted as proposed.

Measurement of banking business. Under the proposed amendments, a foreign institution would have had to meet two tests in order to qualify for the nonbanking exemptions; first, more than half of its worldwide business must be banking; and second, more than half of its banking business must be outside the U.S. The first test involved a measurement of banking versus nonbanking business; the second, foreign banking versus U.S. banking. Under both tests, the foreign banking organization could choose as its measurement either total assets or total revenues.

The Board recognized that the use of solely assets or solely revenues provides an imperfect measure for comparing banking and nonbanking activities, and therefore adopted a revised test of measuring relative sizes of an organization's banking and nonbanking business. On the basis of at least two of three criteria, i.e., assets, revenues, and net income, an organization must derive more than half of its business, excluding U.S. banking business, from banking outside the United States. No assets, revenues or net income of a U.S. bank, branch, agency, commercial lending company, or other company engaged in the business of banking in the U.S. shall be considered as held or derived from outside the United States. This approach would avoid the bias in favor of one type of organization over another that using assets *or* revenues would produce. The amendment also retains the requirement that more than half of an organization's worldwide banking business must be derived from outside the United States. The same criteria described above will be used to measure foreign and U.S. banking business. Comment will also be accepted on the criteria used for measuring "banking business."

Measurement of banking and nonbanking business poses problems primarily because under most accounting conventions the financial statements of the two types of organizations are not ordinarily consolidated; moreover, consolidation occurs at ownership levels above 50 per cent, while control is assumed at 25 per cent levels of ownership under the BHCA. The proposed regulation provided that assets and revenues could be determined on a consolidated or combined basis. The proposal as adopted leaves it to the foreign organization to choose the level of ownership (25 or 50 per cent) at which consolidation or combining will take place.

Change in status and specific determinations of eligibility. The Board proposed that an organization that failed to qualify under the test for two consecutive years, as reflected in its annual report filed with the Board, would lose its eligibility for the exemptions. Such and organization could apply for a specific determination. Activities and investments undertaken while a foreign organization qualified for the exemptions could be retained after the loss of qualified status. However, activities or investments undertaken after the end of the first fiscal year in which the organization did not meet the criteria would not be

grandfathered. Such an organization would, in effect, be on notice of the possible loss of qualified status.

Several comments stated that the uncertainties as to qualification under the test from year to year would make business planning difficult. These comments propose that an organization concerned about the possible future loss of qualification could apply for a specific determination of eligibility at any time. The Board found that this procedure would prove useful in administering the regulation and, with the addition of the procedure for applying for a specific determination prior to loss of eligibility, adopted the regulation as proposed. As proposed, other foreign organizations that do not qualify for automatic exemption may also apply to the Board for determinations on their eligibility.

The Board would exercise this authority under section 4(c)(9) where application of the qualifying tests would prevent sound and reputable foreign banks from doing business in the U.S. The Board will examine the particular facts and circumstances of each case to determine if granting the exemption is appropriate under section 4(c)(9), and if the Board determines that a potential for abuse exists, the Board will deny the exemption or approve the application conditioned in a manner to prevent the occurrence of such abuses.

Nonbanking activities in the United States—Section 2(h) permits a foreign organization to engage in activities in the U.S. through a foreign nonbanking company where the U.S. activities are in the same general line of business or in a business related to that of the foreign nonbanking company. The foreign company must be principally engaged in business outside the U.S. and the exemption may not be used to engage in the securities business in the U.S. Banking and financial activities and activities permissible under section 4(c)(8) of the BHCA may only be engaged in with the Board's approval.

It is clear from the legislative history of the IBA that Congress intended the Board to use the Standard Industrial Classification system for determining the comparability of U.S. and foreign nonbanking activities. The SIC system categories are not precise and the Board invited comments on the feasibility of using the SIC for determining whether U.S. and foreign nonbanking activities are in the same general lines of business.

The comments on the use of the SIC for determining whether U.S. activities of an exempt foreign company are in the same line of business alleged that the 4-digit establishment categories of the SIC were narrow and overly restrictive. Several suggested that the Board instead employ the Enterprise SIC which groups businesses together according to their ownership structure. An enterprise unit consists of all establishments under common ownership and it is the plurality contribution in terms of value added to goods and services, of an organization's component establishments that determines its Enterprise SIC designation. However, because Enterprise SIC units engage in a broader range of activities than SIC establishment units, use of this measure of "same general line of business" would similarly allow exempt foreign companies to engage in a broader range of nonbank activities in the U.S. In view of the explicit directive in the legislative history of the IBA and because the 4-digit classification appears to satisfactorily limit a company's U.S. nonbanking activities consistent with the purposes of the statute, the Board adopted this part of the regulation as proposed.

In keeping with the intent of section 2(h) to limit U.S. activities to those types that an exempt company engages in abroad, the Board proposed that an organization give 60 days prior notification to the Board before engaging in an activity in the U.S. where the U.S. activity would exceed the foreign activity in the same 4-digit classification. The comments noted that this is not required by the statute and would be burdensome to the foreign banking organizations. It was suggested that the Board instead use the quarterly reports of U.S. acquisitions to monitor an organization's activities. If it became apparent that an organization is abusing the exemption, for example by undertaking a token activity abroad solely to engage in the same activity in the U.S., the Board could require cessation of the U.S. activity. The Board has deleted the requirement of prior notification and instead will rely on the quarterly reports submitted by the foreign organizations to monitor their U.S. activities.

Section 2(h) requires that a foreign banking organization must receive the prior approval of the Board before engaging in "banking or financial operations or types of activities permitted under section 4(c)(8)." The Board proposed that banking or financial operations in the U.S. would be permitted only where they are the type permitted under section 4(c)(8) or upon receipt of specific approval by the Board under section 4(c)(9). The Board also proposed that all activities encompassed by Division H (Finance, Insurance and Real Estate) of the SIC would be considered "banking or financial operations" for purposes of the regulation. Comments were highly critical of this approach. Most indicated that the better interpretation of section 2(h) is that it requires Board approval only for activities permitted by section 4(c)(8). In effect, the comments read the phrase "banking or financial operations or types of activities permitted under section 4(c)(8)" to refer only to section 4(c)(8) activities, and cite in support of this position the technical language of the statute and the lack of legislative history indicating that "banking or financial operations" has a meaning independent of section 4(c)(8) activities. The Board, however, continues to be of the view that this position conflicts with the legislative history of the IBA which shows a clear intent to establish competitive equality between foreign and domestic banking organizations, and would result in reading the words "banking or financial operations" out of the statute. In the absence of clear legislative intent to the contrary on this point, the Board, except as discussed below, has adopted the regulation as proposed.

With respect to the types of activities that the Board considers to be "banking or financial operations," the comments were equally critical of the use of Division H as a general definition. The comments found the coverage of Division H to be too broad. The Board reexamined the activities encompassed by Division H and concluded that not all of the activities included therein are necessarily banking or financing in nature. At the same time, certain other activities outside the scope of Division H should be considered banking or financial operations. In other instances, these activities may be the same type of activity permitted under section 4(c)(8) and, in order to preserve competitive equality, should be conducted by foreign organizations only to the extent allowed domestic banking organizations. In view of these considerations the Board adopted the proposal to use Division H as a general category of impermissible (except with Board approval) banking or financial operations with the exception of certain real estate activities. The Board also amended the proposal to include within the scope of impermissible activities certain 4-digit activities found outside Division H of the SIC, including certain data processing, leasing and management consulting activities. The Board recognizes that some of the activities included within Division H may, depending on the circumstances in

which the activities are performed, be primarily commercial as opposed to banking or financial. For example, the physical development of real estate would not appear to be a banking or financial activity. A different result would obtain, however, where that activity is joined with real estate leasing, financing, syndication, etc. Thus, the Board will consider applications to engage in activities that are contained in Division H, and may approve an application to engage in such activities where the facts and circumstances of the case indicate that the activity would not be banking or financial in nature.

In the proposal published for comment, the Board requested comment on any interpretive issues concerning the grandfather provisions of the IBA. Several comments were received and the matter will be addressed in the near future.

Pursuant to its authority under the International Banking Act of 1978 (12 U.S.C. 3101 *et seq.)* and the Bank Holding Company Act (12 U.S.C. 1841 *et seq.),* the Board has amended Regulation K (12 CFR Part 211) and Regulation Y (12 CFR Part 225) as follows:

§ 225.4 [Amended]

1. Section 225.4(g) of Regulation Y is revised to read as follows:

* * * * *

(g) *Foreign banking organization.* In addition to the exemptions afforded by this part, a foreign banking organization (as defined in 12 CFR 211.23) may engage in activities and make investments under Part 211 (Regulation K).

2. Regulation K is amended by adding within Subpart B— Foreign Banking Organizations, new § 211.23, Nonbanking Activities of Foreign Banking Organizations. New § 211.23 is added as follows:

Subpart B—Foreign Banking Organizations

§ 211.23 Nonbanking activities of foreign banking organizations.

(a) *Definitions.* The definitions of § 211.2 in Subpart A apply to this section subject to the following:

(1) "Directly or indirectly" when used in reference to activities or investments of a foreign banking organization means activities or investments of the foreign banking organization or of any subsidiary of the foreign banking organization.

(2) "Foreign banking organization" means a foreign bank (as defined in section 1 (b)(7) of the IBA) that operates a branch, agency, or commercial lending company subsdiary in the United States or that controls a bank in the United States; and a company of which such foreign bank is a subsidiary.

(3) "Subsidiary" means an organization more than 25 per cent of the voting stock of which is held directly or indirectly by a foreign banking organization or which is otherwise controlled or capable of being controlled by a foreign banking organization.

(b) *Qualifying foreign banking organizations.* Unless specifically made eligible for the exemptions by the Board, a foreign banking organization shall qualify for the exemptions afforded by this section only if, disregarding its United States banking, more than half of its worldwide business is banking; and more than half of its banking business is outside the United States. In order to qualify, a foreign banking organization shall:

(1) Meet at least two of the following requirements:

(i) Banking assets held outside the United States [1] exceed total worldwide nonbanking assets;

(ii) Revenues derived from the business of banking outside the United States exceed total revenues derived from its worldwide nonbanking business;

(iii) Net income derived from the business of banking outside the United States exceeds total net income derived from its worldwide nonbanking business; and

(2) Meet at least two of the following requirements:

(i) Banking assets held outside the United States exceed banking assets held in the United States;

(ii) Revenues derived from the business of banking outside the United States exceed revenues derived from the business of banking in the United States;

(iii) Net income derived from the business of banking outside the United States exceeds net income derived from the business of banking in the United States.

(c) *Determining assets, revenues, and net income.* (1) For purposes of paragraph (b) of this section, the total assets, revenues, and net income of an organization may be determined on a consolidated or combined basis. Assets, revenues and net income of companies in which the foreign banking organization owns 50 per cent or more of the voting shares shall be included when determining total assets, revenues, and net income. The foreign banking organization may include assets, revenues, and net income of companies in which it owns 25 per cent or more of the voting shares if all such companies within the organization are included;

(2) Assets devoted to, or revenues or net income derived from, activities listed in § 211.5(d) shall be considered banking assets, or revenues or net income derived from the banking business, when conducted within the foreign banking organization by a foreign bank or its subsidiaries.

(d) *Loss of eligibility for exemptions.* A foreign banking organization that qualified under paragraph (b) of this section or an organization that qualified as a "foreign bank holding company" under § 225.4(g) of Regulation Y (12 CFR 225.4(g) (1980)) [2] shall cease to be eligible for the exemptions of this section if it fails to meet the requirements of paragraph (b) for two consecutive years as reflected in its Annual Reports (F.R. Y-7) filed with the Board. A foreign banking organization that ceases to be eligible for the exemptions may continue to engage in activities or retain investments commenced or acquired prior to the end of the first fiscal year for which its Annual Report reflects nonconformance with paragraph (b) of this section. Activities commenced or investments made after that date shall be terminated or divested within three months of the filing of the second Annual Report unless the Board grants consent to continue the activity or retain the investment under paragraph (e) of this section.

(e) *Specific determination of eligibility for nonqualifying foreign banking organizations.* A foreign banking organization that does not qualify under paragraph (b) of this section for the exemptions afforded by this section, or that has lost its eligibility for the exemptions under paragraph (d) of this section, may apply to the Board for a specific determination of eligibility for the exemptions. A foreign banking organization may apply for a specific determination prior to the time it ceases to be eligible for the exemptions afforded by this section. In determining whether eligibility for the exemptions would be consistent with the purposes of the BHCA and in the public interest, the Board shall consider the history and the financial and managerial resources

[1] None of the direct or indirect assets, revenues, or net income of a United States subsidiary bank, branch, agency, commercial lending company, or other company engaged in the business of banking in the United States shall be considered held or derived from the business of banking "outside the United States."

[2] "'[F]oreign bank holding company' means a bank holding company organized under the laws of a foreign country, more than half of whose consolidated assets are located or consolidated revenues derived, outside the United States." (12 CFR 225.4(g)(iii) (1980)).

of the organization; the amount of its business in the United States; the amount, type and location of its nonbanking activities; and whether eligibility of the foreign banking organization would result in undue concentration of resources, decreased or unfair competition, conflicts of interests, or unsound banking practices. Such determination shall be subject to any conditions and limitations imposed by the Board.

(f) *Permissible activities and investments.* A foreign banking organization that qualifies under paragraph (b) may:

(1) Engage in activities of any kind outside the United States;

(2) Engage directly in activities in the United States that are incidential to its activities outside the United States;

(3) Own or control voting shares of any company that is not engaged, directly or indirectly, in any activities in the United States other than those that are incidental to the international or foreign business of such company;

(4) Own or control voting shares of any company in a fiduciary capacity under circumstances that would entitle such shareholding to an exemption under section 4(c)(4) of the BHCA if the shares were held or acquired by a bank;

(5) Own or control voting shares of a foreign company that is engaged directly or indirectly in business in the United States other than that which is incidental to its international or foreign business, subject to the following limitations:

(i) More than 50 per cent of the foreign company's consolidated assets shall be located, and consolidated revenues derived from, outside the United States;

(ii) The foreign company shall not engage directly, nor own or control more than 5 per cent of the voting shares of a company that engages, in the business of underwriting, selling, or distributing securities in the United States except to the extent permitted bank holding companies;

(iii) If the foreign company is a subsidiary of the foreign banking organization, its direct or indirect activities in the United States shall be subject to the following limitations:

(A) The foreign company's activities in the United States shall be the same kind of activities or related to the activities engaged in directly or indirectly by the foreign company abroad as measured by the "establishment" categories of the Standard Industrial Classification (SIC) (an activity in the United States shall be considered related to an activity outside the United States if it consists of supply, distribution or sales in furtherance of the activity);

(B) The foreign company may engage in activities in the United States that consist of banking or financial operations, or types of activities permitted by regulation or order under section 4(c)(8) of the BHCA, only with the prior approval of the Board. Activities within Division H (Finance, Insurance, and Real Estate) of the SIC shall be considered banking or financial operations for this purpose, with the exception of acting as operators of nonresidential buildings (SIC 6512), operators of apartment buildings (SIC 6513), operators of dwellings other than apartment buildings (SIC 6514), and operators of residential mobile home sites (SIC 6515); and operating title abstract offices (SIC 6541). In addition, the following activities shall be considered banking or financial operations and may be engaged in only with the approval of the Board under subsection (g): computer and data processing services (SIC 7372, 7374 and 7379); management consulting (SIC 7392); certain rental and leasing activities (SIC 7394, 7512, 7513 and 7519); accounting, auditing and bookkeeping services (SIC 8931); and arrangement of passenger transportation (SIC 4722).

(g) *Exemptions under section 4(c)(9) of the BHCA.* A foreign organization that is of the opinion that other activities or investments may, in particular circumstances, meet the conditions for an exemption under section 4(c)(9) of the BHCA may apply to the Board for such a determination by submitting to the Reserve Bank of the district in which its banking operations in the United States are principally conducting a letter setting forth the basis for that opinion.

(h) *Reports.* (1) The foreign banking organization shall inform the Board through the organization's Reserve Bank within 30 days after the close of each quarter of all shares of companies engaged, directly or indirectly, in activities in the United States that were acquired during such quarter under the authority of this section. The foreign banking organization shall also report any direct activities in the United States commenced during such quarter by a foreign subsidiary of the foreign banking organization. This information shall (unless previously furnished) include a brief description of the nature and scope of each company's business in the United States, including the 4-digit SIC numbers of the activities in which the company engages. Such information shall also include the 4-digit SIC numbers of the direct parent of any U.S. company acquired, together with a statement of total assets and revenues of the direct parent.

(2) If any required information is unknown and not reasonably available to the foreign banking organization, either because obtaining it would involve unreasonable effort or expense or because it rests peculiarly within the knowledge of a company that is not controlled by the organizations, the organization shall (i) give such information on the subject as it possesses or can reasonably acquire together with the sources thereof; and (ii) include a statement either showing that unreasonable effort or expense would be involved or indicating that the company whose shares were acquired is not controlled by the organization and stating the result of a request for information.

(3) A request for information required by this paragraph need not be made of any foreign government, or an agency or instrumentality thereof, if, in the opinion of the organization, such request would be harmful to existing relationships.

Board of Governors of the Federal Reserve System, December 4, 1980.

Theordore E. Allison,

Secretary of the Board.

[FR Doc. 80-38181 Filed 12-10-80; 8:45 am]

BILLING CODE 6210-01-M

---

12 CFR Part 262

[Rules of Procedure, Docket No. R-0334]

Rules of Procedure; Notice of Applications; Timeliness of Comments; Informal Hearings

AGENCY: Board of Governors of the Federal Reserve System.

ACTION: Statement of Policy.

SUMMARY: This Statement outlines steps taken by the Board to improve the effectiveness of notices of applications required by a company or bank for deposit-taking facilities under the Rules of Procedure. The Statement also emphasizes the Board's strict observance of its rules regarding timeliness of comments and requests for hearing on these applications. Finally, the Statement provides guidelines for holding informal hearings in the form of public meetings on protested applications, particularly those opposed on the basis of an applicant's Community Reinvestment Act record.

EFFECTIVE DATE: This Statement will apply to applications for which notice is published on or after February 1, 1981.

FOR FURTHER INFORMATION CONTACT: Robert E. Mannion, Deputy General Counsel, (202/452-3274) or Bronwen

Mason, Senior Attorney, (202/452-3564), Board of Governors of the Federal Reserve System, Washington, D.C. 20551.

SUPPLEMENTARY INFORMATION: In 12 CFR Part 262, §§ 262.7 through 262.24 are reserved. 12 CFR Part 262 is amended by adding new § 262.25 to read as follows:

§§ 262.7—262.24 [Reserved]

§ 262.25 Policy statement regarding notice of applications; timeliness of comments and guidelines for public meetings.

(a) *Notice of applications.* A bank or company applying to the Board for a deposit-taking facility must first publish notice of its application in local newspapers. This requirement, found in § 262.3(b)(1) of the Board's Rules of Procedure covers applications under the Bank Holding Company Act and Bank Merger Act, as well as applications for membership in the Federal Reserve System and for new branches of State member banks. Notices of these applications are published in newspapers of general circulation in the communities where the applicant intends to do business, as well as the community where its head office is located. These notices are important in calling the public's attention to an applicant's plans and giving the public a chance to comment on these plans. To improve the effectiveness of the notices, the Board is making several changes in its notice procedures.

(1) The Board has adopted standard forms of notice for use by applicants that will specify the exact date on which the comment period on the application ends, which may not be less than thirty calendar days from the date of publication of the first notice. The newspaper forms also provide the name and telephone number of a person at the appropriate Reserve Bank to call to obtain more information about submitting comments. The Board also publishes notice of bank holding company applications for bank acquisitions in the Federal Register after the application is accepted for filing, and the Reserve Bank can provide the exact date in which this comment period ends. (This period will not end before the date indicated in the newspaper notice, and ordinarily will end after that date.) Comments received on or before the end of the latest comment period on an application will be regarded as timely. These steps should assist interested members of the public in submitting timely comments that are relevant to the facts the Board must consider.

(2) In addition, each Reserve Bank will publish a weekly list of (i) applications accepted as filed by the Reserve Bank; and (ii) applications for which newspaper notices have been published, submitted to the Reserve Bank for acceptance. Any person or organization may request the list. The Board notes that each Reserve Bank's list will include only applications accepted or submitted with that particular Reserve Bank, and persons or groups should request lists from each Reserve Bank having jurisdiction over applications in which they may be interested. Since the lists will be prepared as a courtesy by the Federal Reserve Banks, and are not intended to replace any formal notice required by statute or regulation, the Reserve Banks and the Board assume no responsibility for errors or omissions.

(3) With respect to applications by bank holding companies to engage in nonbank activities or make acquisitions of nonbank firms, after the Board publishes notice of these applications in the Federal Register after the applications are accepted for processing. While these applications are not covered by the notice provisions of § 262.3 of the Board's Rules of Procedures or the provisions of the Community Reinvestment Act, the other provisions of this Statement will apply to such applications. In addition, the weekly lists to be prepared by Reserve Banks will include certain applications by bank holding companies for nonbank acquisitions as they are accepted for processing.

(b) *Timeliness of Comments.* All comments must be received by the Federal Reserve on or before the last date of the comment period specified in the notice. The Board's rules allow it to disregard comments received after the comment period expires. In particular, § 262.3(d) of the Board's Rules of Procedure states that the Board will not consider comments on an application that are not received on or before the expiration of the applicable comment period. Thus, a commenter failing to submit comments on an application within the specified comment period (or any extension) may be precluded from participating in the consideration of the application. In cases where a commenter for good cause is unable to submit its comment within the specified comment period, § 265.2(a) (10) of the Board's Rules Regarding Delegation of Authority (12 CFR 265.2(a)(10)) allows the Secretary of the Board to grant requests for extension of the period. Under this provision, upon receipt of a request *prior* to the expiration of the comment period, the Secretary may grant a brief extension upon clear demonstration of hardship or other meritorious reason for seeking additional time.

(c) *Public Meetings.* The Board is endorsing an experimental period during which public meetings on protested applications will be held in appropriate cases, particularly those protested on the basis of an applicant's CRA record. Subject to determination by the Federal Reserve, a public meeting may be held upon request of the applicant or a protestant who files a timely protest; or may be instituted by the Federal Reserve. The purpose of the public meetings will be to elicit information and to clarify factual issues related to the application. It should be noted that the convening of public meetings is not intended to preclude private meetings between the parties to resolve differences, and the Board continues to encourage such private negotiations. The Board has adopted the following guidelines to be used for requesting, arranging, and conducting public meetings during the experimental period:

(1) *Requesting a Public Meeting.* A meeting may be requested by a person or organization objecting to the application during the comment period, and by the applicant during the period within which it must respond to comments. In requesting a meeting, the protestant should submit material that meets the following criteria:

(i) It must be in writing and received by the Reserve Bank within the specified comment period.

(ii) It should contain a summary of the specific matters to which the protestant objects and the reasons for each objection.

(iii) It should contain facts and evidence supporting the protest, including any financial, economic or demographic data.

(iv) Where appropriate, it should contain a discussion of any adverse effects on the protestant or the community if the application were to be approved.

(v) It should explain why a public meeting is needed, and why written submissions would not suffice in lieu of a meeting.

The protest does not have to be filed in a legal brief or other particular format in order for a public meeting to be granted. The protest will be transmitted by the Reserve Bank to the applicant, and applicant will be allowed ten business days to respond in writing to the protest. Certain personnel designated by the Reserve Bank will be available to assist any member of the

public regarding the types of information generally included in protests, the format generally used by protestants, and any other specific questions about the procedures of the Federal Reserve System regarding protested applications.

(2) *Arranging the Public Meeting.* Public meetings will be arranged and presided over by a representative of the Federal Reserve ("Presiding Officer"). In determining a time and place for the public meeting to be held, the Presiding Officer should take into account such factors as convenience to the parties, the number of people expected to attend the meeting, access to public transportation and possible after-hours security problems. The following time periods will be used as guides in arranging the public meeting:

(i) A public meeting will normally be scheduled no earlier than 10 days and no later than 21 days from the end of the comment period. The Presiding Officer will arrange the meeting within these general time frames to accommodate the schedules of the parties where possible.

(ii) The Presiding Officer will notify the applicant and protestant(s) in writing of the date, time and location of the meeting as soon as possible after it is scheduled.

(iii) At least 7 calendar days prior to the meeting the applicant and protestant(s) should notify the Presiding Officer of the names of all persons wishing to speak on the merits of the application at the public meeting. If time permits, as many of these persons as possible will be authorized by the Presiding Officer to speak.

(iv) Two copies of any exhibits to be presented at the meeting should be sent to the Presiding Officer at least 7 calendar days prior to the meeting. One copy of each exhibit should also be sent to each party at least 7 calendar days prior to the meeting.

(3) *Conducting the Public Meeting.* (i) The Presiding Officer will prepare a written agenda for the public meeting and will provide it to the applicant and protestant(s) at least 3 calendar days prior to the meeting. The agenda will identify the applicant and protestant(s) to the application, confirm the location of the meeting and the time it will commence, list persons authorized to speak at the meeting, and outline the format to be followed during the meeting.

(ii) The proceedings of the public meeting will be transcribed by a court reporter paid for by the Federal Reserve. A copy of the transcript will be available for inspection at the Reserve Bank. Parties may obtain a copy of the transcript by purchasing it from the stenographer for the stenographer's usual fee.

(iii) In conducting the public meeting the Presiding Officer will have the authority and discretion to ensure that the meeting proceeds in a fair and orderly manner. Generally, the public meeting will be conducted in accordance with the following format:

[A] *Opening remarks by the Presiding Officer.* These remarks are to establish the purpose of the meeting and briefly outline the remainder of the agenda.

[B] *Protestant's Presentation.* A presentation regarding why the application should not be approved, including any data or other materials that further the protestant's position. Persons previously identified to the Presiding Officer may speak concerning the merits of the application at this time.

[C] *Applicant's Presentation.* A presentation regarding why the application should be approved, including any data or other material in support of the application. Persons previously identified to the Presiding Officer may speak concerning the merits of the application at this time.

[D] *Protestant's Rebuttal.*

[E] *Applicant's Rebuttal.*

[F] *Question and Answer Period.* Questions may be addressed by the protestant(s), and the applicant to one another, as directed by the Presiding Officer.

(iv) The Applicant and Protestant(s) will each be allowed an aggregate of one and one-half hours in which to conduct their presentation and rebuttal, although the time may be divided between presentation or rebuttal as desired by the applicant or protestant(s). If there is more than one protestant, they will normally be expected to apportion the one and one-half hour period among themselves. The question and answer portion of the meeting should not exceed one hour. The total time for the meeting should not exceed four hours.

(v) The Presiding Officer may accept new written material during the meeting if it is relevant, and will allow the opposing party 10 business days to respond in writing to the new material. The conclusion of the public meeting normally marks the close of the public portion of the record, except for the receipt of written comments reponding to new material accepted at the public meeting.

The Board has issued this interpretation pursuant to its statutory authority under sections 3(a), 4(c)(3) and 5(b) of the Bank Holding Company Act of 1956 (12 U.S.C. 1842(a), 1843(c)(8), and 1844(b)), section 18 of the Federal Deposit Insurance Act (12 U.S.C. 1828(c)), and sections 9 and 11(i) of the Federal Reserve Act (12 U.S.C. 321 and 248(i)).

By order of the Board of Governors of the Federal Reserve System, December 3, 1980.

Theodore E. Allison,

Secretary of the Board.

[FR Doc. 80-38383 Filed 12-10-80; 8:45 am]

BILLING CODE 6210-01-M

---

12 CFR Part 262

[Rules of Procedure, Docket No. R-0335]

Rules of Procedure; Notice of Applications

AGENCY: Board of Governors of the Federal Reserve System.

ACTION: Final amendment.

SUMMARY: This amendment reflects steps taken by the Board to improve the effectiveness of newspaper notices of applications by a bank or company for deposit-taking facilities required under the Board's Rules of Procedure, by requiring the use of a standardized form of notice; specifying that notices appear in the classified legal notices section of the newspaper; and requiring submission of the application immediately after the first notice is published.

EFFECTIVE DATE: This amendment will apply to all applications for which notice is published on or after February 1, 1981.

FOR FURTHER INFORMATION CONTACT: Robert E. Mannion, Deputy General Counsel (202/452-3274) or Bronwen Mason, Senior Attorney (202/452-3564), Board of Governors of the Federal Reserve System, Washington, D.C. 20551.

SUPPLEMENTARY INFORMATION: Under § 262.3(b)(1) of the Board's Rules of Procedure ("Rules"), a bank or company applying to the Board for a deposit-taking facility must first publish notice of its application in local newspapers. This requirement covers applications under the Bank Holding Company Act and Bank Merger Act, as well as applications for membership in the Federal Reserve System and for new branches of State member banks. Notices of these applications are published in newspapers of general circulation in the communities where the applicant intends to do business, as well as the community where its head office is located. These notices are important in calling the public's attention to an applicant's plans and giving the public a chance to comment on these plans. The Board is making several changes in its

notice procedures to improve the effectiveness of the notices.

The Board has amended its Rules to require the notices to be published in the form prescribed by the Board. The approved standardized newspaper notices are attached as Exhibits 1, 2, and 3 to this notice. Using these notices, applicant's must specify the exact date on which the comment period on the application ends (which may not be less than thirty calendar days from the date of publication of the first notice). The newspaper notices will also provide the name and telephone number of a person at the appropriate Reserve Bank to call to obtain more information about submitting comments. The Board has also amended to regulation to require that the newspaper notices appear in the classified legal notices section of the newspaper. While most applicants currently publish their notices in this fashion, adoption of this requirement is intended to promote uniformity of the placement of required newspaper notices so that they may be identified easily by interested persons.

The regulation provides that the newspaper notices must be published before the application could be filed with the Reserve Bank. In adopting this provision, the Board apparently believed that the newspaper notices would immediately precede the submission of an application and its acceptance by the Reserve Bank. It has been the Board's experience, however, that in numerous instances applicants have allowed a substantial period of time to elapse between the publication of notice and the submission of a final application to the Reserve Bank. In this situation the comment period specified in the newspaper notice may end before a person interested in commenting has an opportunity to examine the application. Moreover, it has been the Board's policy since the institution of the notice requirements that notices published more than 90 days prior to the submission of the application are "stale". Thus, as the result of the delay in submitting the application notices often become "stale", and must be republished at the applicant's expense.

In order to remedy these difficulties and to effectuate its original intent, the Board has amended its Rules. The amendment requires that the applicant submit its application to the Reserve Bank, together with a copy of the notice as it appeared in the newspaper, between the publication of the first and second notice. The amendment also provides that the notice may not precede acceptance of the application by the Reserve Bank by more than ninety days.

The provisions of 5 U.S.C. 553 relating to notice and public participation have not been followed in connection with adoption of these amendments because the changes involved are procedural in nature and do not constitute substantive rules subject to the requirements of that section. The Board's expanded rulemaking procedures (44 FR 3,957 (1979)) have not been followed because the amendments are technical in nature.

This action is taken pursuant to its authority under section 3(a) and 5(b) of the Bank Holding Company Act of 1956 (12 U.S.C. 1842(a) and 1844(b)), section 18 of the Federal Deposit Insurance Act (12 U.S.C. 1828(c)), and sections 9 and 11(i) of the Federal Reserve Act (12 U.S.C. 321 and 248(i)).

Accordingly, in § 262.3(b) of the Board's Rules of Procedure, subparagraph (1) is revised to read as follows:

§ 262.3 Applications.

* * * * *

(b) *Notice of applications.* (1) In the case of applications,

(i) For membership in the Federal Reserve System where such membership would confer Federal deposit insurance on a bank,

(ii) By a State member bank for the establishment of a domestic branch or other facility that would be authorized to receive deposits,

(iii) By a State member bank for the relocation of a domestic branch office,

(iv) For merger, consolidation, or acquisition of assets or assumption of liabilities, if the acquiring, assuming, or resulting bank is to be a State member bank,

(v) To become a bank holding company, and

(vi) By a bank holding company to acquire ownership or control of shares or assets of a bank, or to merge or consolidate with any other bank holding company,

the applicant shall cause to be published on the same day of each of two consecutive weeks a notice in the form prescribed by the Board. The notice shall be placed in the classified advertising legal notices section of the newspaper, and the first notice may appear no more than ninety calendar days prior to acceptance by the Reserve Bank of the application. The notice must provide an opportunity for the public to give written comment on the application to the appropriate Federal Reserve Bank for at least thirty days after the date of publication of the first notice. In addition, between publication of the first and second notice, the applicant shall submit to the appropriate Reserve Bank for acceptance copies of the application, together with a copy of the notice as it appeared in the newspaper. Such notice shall be published in a newspaper of general circulation in (A) the community in which the head office of the bank is or is to be located in the case of an application for membership that would confer deposit insurance, (B) the community or communities in which the head office of the bank and the proposed branch or other facility (other than an electronic funds transfer facility) are located in the case of an application for the establishment of a domestic branch or other facility that would be authorized to receive deposits, (C) the community or communities in which the head office of the bank, the office to be closed, and the office to be opened are located in the case of an application for the relocation of a domestic branch office, (D) the community or communities in which the head office of each of the banks to be party to the merger, consolidation, or acquisition of assets or assumption of liabilities are located in the case of an application by a bank for merger, consolidation, or acquisition of assets or assumption of liabilities, or (E) the community or communities in which the head offices of the largest subsidiary bank, if any, or an applicant and of each bank, shares of which are to be directly or indirectly acquired, are located in the case of applications under section 3 of the Bank Holding Company Act.

* * * * *

Board of Governors of the Federal Reserve System, December 3, 1980.

Theodore E. Allison,

Secretary of the Board.

Note.—Exhibit 1 will not appear in CFR.

EXHIBIT 1

Notice of Application for [Bank Holding Company] or [Acquisition of a Bank by a Bank Holding Company] or [Merger of Bank Holding Companies]

Notice is hereby given by the Applicant *(name and location of head office)* that it will apply to the Federal Reserve Board pursuant to section 3 of the Bank Holding Company Act for [a bank holding company] or [acquisition of shares of a bank] or [merger with another bank holding company]. The Applicant intends to acquire *(number and percent of outstanding)* shares of *(name of bank or company and location of head office).*

The public is invited to submit written comments on this application to the Federal Reserve Board at the Federal Reserve Bank of *(name and mailing address of appropriate Reserve Bank).* The comment period on this application will not end before *(date—must be no less than 30 days from date of first notice).* Call *(name and telephone number)* at

the Federal Reserve Bank of *(name)* to find out if you have additional time for submitting comments on this application or if you need more information about submitting comments. The Federal Reserve will consider comments, including requests for a public meeting or formal hearing on the application, if they are received by the Federal Reserve Bank during the comment period.

Note.—Exhibit 2 will not appear in CFR.

Exhibit 2

Notice of Application for Merger of Banks [and Establishment of Branches]

Notice is hereby given by the Applicant *(name and location of head office)* that it will apply to the Federal Reserve Board pursuant to the Bank Merger Act to merge with *(name and location of head office of bank)*, [and thereby to establish branches. The Applicant proposes to engage in business at the following locations: *(street addresses of branches and deposit facilities of bank to be merged)*.]

The public is invited to submit written comments on this application to the Federal Reserve Board at the Federal Reserve Bank of *(name and mailing address of appropriate Reserve Bank)*. The comment period on this application will end *(date-must be no less than thirty days from the date of the first notice)*. Call *(name and telephone number)* at the Federal Reserve Bank of *(name)* if you need more information about submitting comments. The Federal Reserve will consider comments, including requests for a public meeting or formal hearing on the application, if they are received during the comment period.

Note.—Exhibit 3 will not appear in CFR.

Exhibit 3

Notice of Application for [Membership in the Federal Reserve System] or [Establishment or Relocation of Branches]

Notice is hereby given by the Applicant *(name and location of head office)* that it will apply to the Federal Reserve Board pursuant to the Federal Reserve Act for *(membership, relocation or establishment of branch)*. [The Applicant proposes to engage in business at the following locations: *(street addresses of branches and deposit facilities)*.]

The public is invited to submit written comments on this application to the Federal Reserve Board at the Federal Reserve Bank of *(name and mailing address)*. The comment period on this application will end *(date—must be no less than 30 days from the date of the first notice)*. Call *(name and telephone number)* at the Federal Reserve Bank of *(name)* if you need more information about submitting comments. The Federal Reserve will consider comments, including requests for a public meeting or formal hearing on the application, if they are received by the Reserve Bank during the comment period.

[FR Doc. 80-38382 Filed 12-10-80; 8:45 am]
BILLING CODE 6210-01-M

FEDERAL HOME LOAN BANK BOARD

12 CFR Part 522

[No. 80-740]

Office of Neighborhood Reinvestment

November 26, 1980.

AGENCY: Federal Home Loan Bank Board.

ACTION: Final amendments.

SUMMARY: These final amendments adjust the Office of Neighborhood Reinvestment's (ONR) fiscal year to coincide with that of the Neighborhood Reinvestment Corporation, to which it provides staff. Also, these amendments authorize ONR to submit to the Board a nine-month transition budget for the remainder of Fiscal Year 1981, and make other technical changes to the regulations under which ONR operates.

EFFECTIVE DATE: November 26, 1980.

FOR FURTHER INFORMATION CONTACT: Carol McCabe, Office of Neighborhood Reinvestment, (202) 377-6076, or Patricia C. Trask, Office of General Counsel, (202) 377-6442, Federal Home Loan Bank Board, 1700 G Street, N. W., Washington, D.C. 20552.

SUPPLEMENTARY INFORMATION: Effective October 31, 1978, the responsibilities of the Urban Reinvestment Task Force were transferred to the Neighborhood Reinvestment Corporation (Corporation), which was created by Pub. L. No. 95-557, 42 U.S.C. 8101 *et. seq.* The Office of Neighborhood Reinvestment (ONR) provides all necessary staff support services to the Corporation. Currently, ONR is on a calendar-year budget, while the Corporation is on a fiscal-year budget. In order to simplify the budgetary process, these amendments make uniform the budgets of both organizations by changing ONR to a fiscal-year basis. The amendments accomplish this by authorizing ONR to submit to the Board by December 1, 1980, a nine-month budget for the transition period, and a fiscal-year budget by September of 1981 and thereafter.

Additionally, two technical amendments are made. One substitutes "Neighborhood Reinvestment Corporation" for "Urban Reinvestment Task Force" and deletes the listing of Task Force members in paragraph (a) of 12 CFR 522.86 since the authorizing statute replaced the Task Force with the Corporation. The other amendment deletes obsolete paragraph (b) of 12 CFR 522.87 since the services authorized to be performed for ONR by the Office of Finance of the Federal Home Loan Banks are performed by the Corporation.

Because the amendments pertain to the Board's internal operations, the Board has determined that public notice and procedure under 5 U.S.C. 553(b) and 12 CFR 508.11 are unnecessary with regard to these amendments, and a 30-day delay of effective date under 5 U.S.C. 553(d) are 12 CFR 508.14 is unnecessary for the same reason.

Accordingly, the Board hereby amends Part 522, Subchapter B, Chapter V of Title 12, *Code of Federal Regulations*, as set forth below.

SUBCHAPTER B—GENERAL REGULATIONS

PART 522—ORGANIZATION OF THE BANKS

§ 522.86 [Amended]

1. Amend paragraph (a) of § 522.86 (*"Functions and duties of Office of Neighborhood Reinvestment"*) by substituting "provide staff support services for the Neighborhood Reinvestment Corporation" for the present clause following "(1)" in that paragraph.

§ 522.87 [Amended]

2. Amend the first sentence of paragraph (a) of § 522.87 (*"Budget and expenses"*) to read: "The Office of Neighborhood Reinvestment shall annually submit to the Board by September 1 a budget of its proposed expenditures for the following fiscal year beginning October 1 and ending September 30, except that the Office shall submit by December 1, 1980, a transition-year budget for the first nine months of Calendar Year 1981."

3. Delete paragraph (b) of § 522.87.

(Pub. L. No. 95-557, 92 Stat. 2115 (42 U.S.C. 8101); sec. 17, 47 Stat. 736, as amended (12 U.S.C. 1437); Reorg. Plan No. 3 of 1947, 12 FR 4981, 3 CFR, 1943-48 Comp., 1071)

By the Federal Home Loan Bank Board,

Robert D. Linder,

Acting Secretary.

[FR Doc. 80-38451 Filed 12-10-80; 8:45 am]
BILLING CODE 6720-01-M

DEPARTMENT OF TRANSPORTATION

Federal Aviation Administration

14 CFR Part 39

[Docket No. 80-EA-27; Amdt. 39-3987]

Airworthiness Directives; Boeing Vertol 107-II

AGENCY: Federal Aviation Administration (FAA), DOT.

ACTION: Final rule.

SUMMARY: This amendment issues a new airworthiness directive (AD) applicable to Boeing Vertol 107-II type helicopters, which establishes a retirement life of 27,800 hours on the main rotor blade tension straps. The new life limit is based upon a re-evaluation of fatigue by the manufacturer. A fatigue failure in the strap could result in substantial damage to the helicopter.

EFFECTIVE DATE: December 12, 1980. Compliance is required as set forth in the AD.

ADDRESSES: Boeing Vertol Service Bulletins may be acquired from the manufacturer at P.O. Box 16858, Philadelphia, Pa. 19142

FOR FURTHER INFORMATION CONTACT: J. Chrastil, Airframe Section, AEA-212, Engineering and Manufacturing Branch, Federal Building, J.F.K. International Airport, Jamaica, New York 11430; Tel. 212-995-2875.

SUPPLEMENTARY INFORMATION: On September 2, 1980, the FAA published a Notice of Proposed Rulemaking on page 58136 of the Federal Register, 45 FR 58136, and gave interested parties an opportunity to submit comments. No objections were received.

Adoption of the Amendment

Accordingly, pursuant to the authority delegated to me by the Administrator, § 39.13 of Part 39 of the Federal Aviation Regulations (14 CFR 39.13) is amended, by adopting the amendment as published.

Effective Date: This amendment is effective December 12, 1980.

(Secs. 313(a), 601, and 603, Federal Aviation Act of 1958, as amended, 49 U.S.C. 1354(a), 1421, and 1423; Sec. 6(c), Department of Transportation Act, 49 U.S.C. 1655(c), and 14 CFR 11.89)

Note.—The Federal Aviation Administration has determined that this document involves a regulation which is not significant under Executive Order 12044 as implemented by Department of Transportation Regulatory Policies and Procedures (44 FR 11034; February 26, 1979).

Issued in Jamaica, New York, on November 28, 1980.

Murray E. Smith,

Director, Eastern Region.

Boeing Vertol (Vertol): Applies to Vertol Model 107-II helicopters certificated in all categories.

Compliance required as indicated.

To prevent fatigue failure of the main rotor tension-torsion strap assemblies, remove from service tension-torsion strap assemblies Part No. 107R2003-1 upon the accumulation of 27,800 hours in service and replace with an airworthy part that meets the requirement of this AD.

[FR Doc. 80-38042 Filed 12-10-80; 8:45 am]
BILLING CODE 4910-13-M

---

14 CFR Part 39

[Docket No. 80-WE-49-AD; Amdt. 39-3989]

Airworthiness Directives; Robinson Helicopter Model R-22 Helicopters

AGENCY: Federal Aviation Administration (FAA), DOT.

ACTION: Final rule.

SUMMARY: This action publishes in the Federal Register and makes effective to all persons an amendment adopting a new Airworthiness Directive (AD) which was previously made effective on Robinson Helicopter Model R-22 Helicopters and notified to all affected operators by telegraphic AD Number T80-21-53, dated October 11, 1980. This amendment requires repetitive inspection and eventual removal from service of certain spiral bevel gears installed in the main rotor transmission of certain Robinson Model R-22 Helicopters. This AD is needed to prevent gear tooth failure and possible loss of power to the main rotor system.

DATES: Effective December 18, 1980, and was effective upon receipt for recipients of telegraphic AD T80-21-53, dated October 11, 1980.

Compliance Schedule—Prior to further flight from effective date of this AD unless already accomplished.

ADDRESSES: The applicable service information may be obtained from: Robinson Helicopter Company, 24747 Crenshaw Boulevard, Torrance, California 90505.

Also, a copy of the service information may be reviewed at, or a copy obtained from: Rules Docket in Room 916, FAA, 800 Independence Avenue, S.W., Washington, D.C. 20591, or Rules Docket in Room 6W14, FAA Western Region, 15000 Aviation Boulevard, Hawthorne, California 90261.

FOR FURTHER INFORMATION CONTACT: Robert T. Razzeto, Executive Secretary, Airworthiness Directive Review Board, Federal Aviation Administration, Western Region, P.O. Box 92007, World Way Postal Center, Los Angeles, California 90009. Telephone: (213) 536-6351.

SUPPLEMENTARY INFORMATION: An emergency AD was issued as telegraphic AD Number T80-21-53, dated October 11, 1980, and made effective immediately upon receipt to all known U.S. operators of Robinson Model R-22 Helicopters. This AD requires repetitive inspections and eventual removal from service of certain spiral bevel gear sets numbered 39 through 210 installed in the main rotor transmission of certain Robinson Model R-22 Helicopters. This AD was prompted by reports of gear tooth failure and later determination by the manufacturer that certain gears were released for use that are now suspected to have excessive carburized case hardening thickness, which could result in gear tooth failure and possible loss of power to the main rotor system. Since this condition is likely to exist or develop on other helicopters of the same type design, an Airworthiness Directive is being adopted which requires repetitive inspections of certain spiral bevel gear sets numbered 39 through 210 installed in the main rotor transmission of the Robinson Model R-22 Helicopters.

Since a situation exists that requires immediate adoption of this regulation, it is found that notice and public procedure hereon are impracticable and good cause exists for making this amendment effective in less than 30 days.

Adoption of the Amendment

Accordingly, pursuant to the authority delegated to me by the Administrator, § 39.13 of Part 39 of the Federal Aviation Regulations (14 CFR 39.13) is amended, by adding the following new Airworthiness Directive:

Robinson Helicopter: Applies to Model R-22 Helicopters, certified in all categories, fuselage numbers 0006 through 0060, with spiral bevel gear sets numbered 39 through 210 installed in the main rotor transmission.

Compliance is required prior to further flight unless already accomplished.

To prevent tooth failure of the spiral bevel gear in the main rotor transmission and possible loss of power to the main rotor system, accomplish the following:

(a) Prior to further flight and at intervals not to exceed 10 hours' time in service thereafter, inspect the main transmission gear teeth in accordance with paragraph "Inspection Procedure" of Robinson Helicopter Company Mandatory Service Bulletin SB-5, dated October 6, 1980.

(b) If gear tooth spalling, or cracks are detected, or if chips are found on the sump magnetic chip detector plug, remove the main transmission from service.

(c) In the event that the MR (main rotor) chip light comes on during flight, make a precautionary landing as soon as possible and remove the transmission from service.

(d) Flight is prohibited without an operable MR chip detector system. Prior to each flight the pilot must perform a MR chip light check by grounding the electrical terminal of the chip detector at the bottom of the main transmission and checking to be sure the MR light on the instrument panel illuminates. The pilot must be trained by a certified mechanic

to perform this check. This check constitutes preventative maintenance and may be performed by persons authorized to perform preventative maintenance under FAR 43. The check required by this paragraph may be performed by the pilot.

(e) All gear sets numbered 39 through 210 must be removed from service no later than January 31, 1981. Replacement of these gear sets constitutes terminating action for this AD.

(f) Special flight permits may be issued, in accordance with FAR 21.197 and 21.199, to operate helicopters to a base for the accomplishment of inspections required by this AD.

(g) Alternative inspections, modifications, or other actions which provide an equivalent level of safety may be used when approved by the Chief, Engineering and Manufacturing Branch, FAA Western Region.

This amendment becomes effective December 18, 1980 to all persons, except those to whom it was made immediately effective by telegraphic AD T80-21-53, dated October 11, 1980.

(Secs. 313(a), 601, and 603, Federal Aviation Act of 1958, as amended (49 U.S.C. 1354(a), 1421, and 1423); Sec. 6(c) Department of Transportation Act (49 U.S.C. 1655(c)); and 14 CFR 11.89)

Note.— The FAA has determined that this document involves a final regulation which is not considered to be significant under Executive Order 12044, as implemented by DOT Regulatory Policies and Procedures (44 FR 11034, February 26, 1979).

Issued in Los Angeles, California on November 26, 1980.

H. C. McClure,

Acting Director, FAA Western Region.

[FR Doc. 80-38341 Filed 12-10-80; 8:45 am]

BILLING CODE 4910-13-M

---

14 CFR Part 39

[Docket No. 80-WE-32-AD; Amdt. 39-3988]

Airworthiness Directives; Rockwell International Model NA265-40 and -60 Series Aircraft

AGENCY: Federal Aviation Administration (FAA), DOT.

ACTION: Final rule.

SUMMARY: This amendment adopts a new airworthiness directive (AD) which requires inspection and repair, as necessary, of the fuselage structure below the cabin entrance door on Rockwell International Model NA265-40 and -60 series airplanes. The AD is needed to prevent crack growth which could result in loss of cabin pressure.

DATES: Effective January 19, 1981. Compliance schedule—As prescribed in the body of the AD.

ADDRESSES: The applicable service information may be obtained from: Rockwell International, Sabreliner Division, 827 Lapham Street, El Segundo, California 90245.

Also, a copy of the service information may be reviewed at, or a copy obtained from:

Rules Docket in Room 916, FAA, 800 Independence Avenue SW., Washington, D.C. 20591, or

Rules Docket in Room 6W14, FAA Western Region, 15000 Aviation Boulevard, Hawthorne, California 90261.

FOR FURTHER INFORMATION CONTACT: Jerry Presba, Executive Secretary, Airworthiness Directive Review Board, Federal Aviation Administration, Western Region, P.O. Box 92007, World Way Postal Center, Los Angeles, California 90009. Telephone: (213) 536-6351.

SUPPLEMENTARY INFORMATION: A proposal to amend Part 39 of the Federal Aviation Regulations to include an airworthiness directive requiring inspection and repair, as necessary, of the fuselage structure below the cabin entrance door on Rockwell International Model NA265-40 and -60 Series airplanes was published in the Federal Register at 45 FR 46434. The proposal was prompted by reports of cracks in the fuselage structure below the cabin entrance door on certain Rockwell International Model NA265-40 and -60 airplanes, which could result in cabin depressurization.

Interested persons have been afforded an opportunity to participate in the making of the amendment. Comments were received from several operators, concurring in the need for the AD but recommending changes to the proposed AD in the following three areas, paraphrased as follows:

Comment No. 1

Paragraph (a)(3) of the proposed AD states that all cracks less than one inch long must be repaired in a manner approved by the Chief, Engineering and Manufacturing Branch, FAA Western Region. Delays in obtaining such approvals could represent undue burdens to the operators and it is maintained that the FAA should require the manufacturer to develop a repair scheme for such cracks.

FAA Response

Subsequent to the issuance of the NPRM, the manufacturer has developed and FAA has approved a revision to Service Bulletin No. 56 which provides a repair procedure for the subject cracks. The FAA has, therefore, revised the Service Bulletin citation to reflect this change.

Comment No. 2

Material for Kits 13808-20 and 13808-30 to accomplish paragraph (a)(3) and (a)(4) of the AD should not be mandated as having to come from the manufacturer only. If materials of an approved type can be obtained elsewhere, then the operator should be allowed the option to purchase them.

FAA Response

The proposed AD contains language in paragraph (c) which authorizes those affected by the AD to use alternate modifications or other actions when approved by the Chief, Engineering and Manufacturing Branch, FAA Western Region. Therefore, the FAA has not revised the subject parts of paragraphs (a)(3) and (a)(4) since the options which the commenters desire are available to them.

Comment No. 3

Paragraph (a)(5) of the proposed AD requires accomplishment of Service Kit 13808-40. This should not be required because of extensive down-time and cost, and instead paragraph (a)(5) should read; "Repair and inspect at 600 hour intervals or install Service Kit 13808-40, at the operator's option."

FAA Response

The FAA concurs that safety requirements can be satisfied by other means than those specified in the present paragraph (a)(5). Service Kit 13808-40 represents an FAA approved repair. Other standard repairs which may be appropriate have not yet been defined or approved due in part to the diverse nature of the damage which experience has revealed to date. This diversity of damage combined with the repair criticality of the safe-life structure requires careful scrutiny of prototype repair proposals. For these reasons there is some doubt that any real advantage would accrue from the proposed option. The FAA is, nonetheless, modifying paragraph (a)(5) to conform to the intent of the comment on the basis that, safety requirements permitting, the option should vest with the operator.

After careful review of all available data, including the comments submitted by the operators, the FAA has determined that sufficient evidence exists in the public interest in aviation safety to adopt the proposed rule with the relieving changes discussed above, plus certain editorial changes dictated by a change in FAA organization.

Adoption of the Amendment

Accordingly, pursuant to the authority delegated to me by the Administrator, Section 39.13 of Part 39 of the Federal

Aviation Regulations (14 CFR 39.13) is amended, by adding the following new Airworthiness Directive:

ROCKWELL INTERNATIONAL: Applies to Model NA265-40 Series, Serial numbers 282-1 through 282-137, and -60 Series, Serial Numbers 306-1 through 306-64, 306-68, 306-71 through 306-103 airplanes certificated in all categories, not modified in accordance with Life Extension Modification per North American Rockwell Drawing 306-053010 or Service Kit SK 13808-40.

Compliance required as indicated, unless already accomplished.

To prevent inadvertent cabin depressurization accomplish the following:

(a) On aircraft with 2,000 or more hours' total time in service, within the next 600 hours' additional time in service or within the next 12 months from the effective date of this AD, whichever occurs first;

(1) Gain access and conduct a close visual inspection of the fuselage structure below the cabin entrance door and adjacent areas in accordance with "Modification instructions 1 through 3" of Sabreliner Service Bulletin No. 56 dated September 22, 1980. Access is gained by modification in accordance with Service Kit SK 13808-10.

(2) If no cracks are detected, repeat the inspections required in paragraph (a)(1) of this AD at intervals not to exceed 600 hours' time in service since the last such inspection.

(3) If cracks are detected which are less than one inch long in the outboard bays only, repair per Sabreliner Service Bulletin No. 56, dated September 22, 1980, and accomplish Service Kit SK 13808-20. Repeat the inspections required by paragraph (a)(1) of this AD at intervals not to exceed 600 hours' time in service since the last such inspection.

(4) If cracks are detected which are less than one inch long in the inboard bays or inboard and outboard bays, repair per Sabreliner Service Bulletin No. 56, dated September 22, 1980, and accomplish Service Kit SK 13808-30. Repeat the inspections required by paragraph (a)(1) of this AD at intervals not to exceed 600 hours' time in service since the last such inspection.

(5) If cracks are detected which are one inch or longer, repair in a manner approved by the Chief, Engineering and Manufacturing Branch, FAA Western Region, or by the installation of Service Kit SK 13808-40. The installation of Service Kit SK 13808-40 terminates the inspections required by this AD. For other repairs, unless specifically authorized by the Chief, Engineering and Manufacturing Branch, FAA Western Region, repeat the inspections required by paragraph (a)(1) of this AD at intervals not to exceed 600 hours' time in service since the last such inspection.

(b) Special flight permits may be issued in accordance with FAR 21.197 and 21.199 to operate airplanes to a base for the accomplishment of inspections required by this AD.

(c) Alternative inspections, modifications or other actions which provide an equivalent level of safety may be used when approved by the Chief, Engineering and Manufacturing Branch, FAA Western Region.

(Secs. 313(a), 601, and 603, Federal Aviation Act of 1958, as amended (49 U.S.C. 1354(a), 1421, and 1423); Sec. 6(c) Department of Transportation Act (49 U.S.C. 1655(c)); and 14 CFR 11.89)

This amendment becomes effective January 19, 1981.

Note.—The FAA has determined that this document involves a final regulation which is not considered to be significant under Executive Order 12044 as implemented by DOT Regulatory Policies and Procedures (44 FR 11034; February 26, 1979). In addition, the expected impact is so minimal that this action does not warrant preparation of a regulatory evaluation.

Issued in Los Angeles, California on November 28, 1980.

H. C. McClure,

Acting Director, FAA Western Region.

[FR Doc. 80-38340 Filed 12-10-80; 8:45 am]

BILLING CODE 4910-13-M

---

14 CFR Part 71

[Airspace Docket No. 80-SO-57]

Alteration of Control Zone, Pensacola, Florida

AGENCY: Federal Aviation Administration (FAA), DOT

ACTION: Final rule.

SUMMARY: This rule designates an extension of the Pensacola, Florida, Control Zone. A new standard instrument approach procedure has been developed for the Pensacola Regional Airport. Additional controlled airspace is required to protect aircraft executing the approach procedure and must be designated before the procedure can become effective.

EFFECTIVE DATE: February 19, 1981.

ADDRESS: Federal Aviation Administration, Chief, Air Traffic Division, P.O. Box 20636, Atlanta, Georgia 30320.

FOR FURTHER INFORMATION CONTACT: Harlen D. Phillips, Airspace and Procedures Branch, Federal Aviation Administration, P.O. Box 20636, Atlanta, Georgia 30320; telephone: 404-763-7646.

SUPPLEMENTARY INFORMATION: A Notice of Proposed Rulemaking was published in the Federal Register on Monday, September 29, 1980 (45 FR 64208), which proposed the alteration of the Pensacola, Florida, Control Zone. A new standard instrument approach procedure, VOR Rwy 8, utilizing the Saufley VOR has been developed for the Pensacola Regional Airport. A control zone extension west of the airport is required to protect aircraft executing the approach procedure.

No objections were received from this Notice.

Adoption of the Amendment

Accordingly, Subpart F, § 71.171 (45 FR 356) of Part 71 of the Federal Aviation Regulations (14 CFR 71) is amended, effective 0901 GMT, February 19, 1981, by adding the following:

Pensacola, Florida

". . . and within 1.5 miles each side of the Saufley VOR 090° radial, extending from the 5-mile radius zone to 2.5 miles east of the VOR . . ."

(Sec. 307(a) of the Federal Aviation Act of 1958, as amended (49 U.S.C. 1348(a)) and Sec. 6(c) of the Department of Transporation Act (49 U.S.C. 1655(c)))

Note.—The Federal Aviation Administration has determined that this document involves a regulation which is not significant under Executive Order 12044, as implemented by DOT Regulatory Policies and Procedures (44 FR 11034, February 26, 1979). Since this regulatory action involves an established body of technical requirements for which frequent and routine amendments are necessary to keep them operationally current and promote safe flight operations, the anticipated impact is so minimal that this action does not warrant preparation of a regulatory evaluation.

Issued in East Point, Georgia, on November 28, 1980.

George R. LaCaille,

Acting Director, Southern Region.

[FR Doc. 80-38238 Filed 12-10-80; 8:45 am]

BILLING CODE 4910-13-M

---

14 CFR Part 71

[Airspace Docket No. 80-ASW-46]

Designation of VOR Federal Airway

AGENCY: Federal Aviation Administration (FAA), DOT.

ACTION: Final rule.

SUMMARY: This amendment designates new VOR Federal Airway V-385 from Abilene, Tex., to Lubbock, Tex. This alteration provides a route that bypasses the Reese 4 and 5 and Roby Military Operations Areas (MOAs) when they are activated; thereby improving flight safety in that area.

EFFECTIVE DATE: February 19, 1981.

FOR FURTHER INFORMATION CONTACT: Lewis W. Still, Airspace Regulations and Obstructions Branch (AAT-230), Airspace and Air Traffic Rules Division, Air Traffic Service, Federal Aviation Adminstration, 800 Independence Avenue, SW., Washington, D.C. 20591; telephone: (202) 426-8525.

SUPPLEMENTARY INFORMATION: On November 3, 1980, the FAA proposed to amend Part 71 of the Federal Aviation Regulations (14 CFR Part 71) to

designate new VOR Federal Airway V-385 from Abilene, Tex., to Lubbock, Tex. This airway will be utilized when MOAs Reese 4/5 and MOA Roby are activated, otherwise, aircraft will proceed via V-62 (45 FR 72683). This action aids flight planning and increases air safety in the area especially during the period when military flight training is being conducted. Interested persons were invited to participate in the rulemaking proceeding by submitting written comments on the proposal to the FAA. No comments objecting to the proposal were received. This amendment is the same as that proposed in the notice. Section 71.123 of Part 71 was republished in the Federal Register on January 2, 1980, (45 FR 307).

The Rule

This amendment to Subpart C of Part 71 of the Federal Aviation Regulations (14 CFR Part 71) designates new VOR Federal Airway V-385 from Abilene, Tex., to Lubbock, Tex. V-385 will be utilized to bypass Reese 4/5 MOAs and Roby MOA when they are activated. This amendment aids flight planning and increases air safety in this area during military training missions.

Adoption of the Amendment

Accordingly, pursuant to the authority delegated to me by the Administrator, Part 71 of the Federal Aviation regulations (14 CFR Part 71) as republished (45 FR 307) is amended, effective 0901 GMT, February 19, 1981, as follows:

Under § 71.123: "V-385 From Lubbock, Tex.; INT Lubbock 096° and Abilene, Tex., 333° radials; Abilene." is added.

(Secs. 307(a) and 313(a), Federal Aviation Act of 1958 (49 U.S.C. 1348(a) and 1354(a)); Sec. 6(c), Department of Transportation Act (49 U.S.C. 1655(c)); and 14 CFR 11.69)

Note.—The FAA has determined that this document involves a regulation which is not significant under Executive Order 12044, as implemented by DOT Regulatory Policies and Procedures (44 FR 11034; February 26, 1979). Since this regulatory action involves an established body of technical requirements for which frequent and routine amendments are necessary to keep them operationally current and promote safe flight operations, the anticipated impact is so minimal that this action does not warrant preparation of a regulatory evaluation.

Issued in Washington, D.C. on December 3, 1980.

B. Keith Potts,

Acting Chief, Airspace and Air Traffic Rules Division.

[FR Doc. 80-38237 Filed 12-10-80; 8:45 am]

BILLING CODE 4910-13-M

14 CFR Part 95

[Docket No. 21150; Amdt. No. 95-295]

IFR Altitudes; Miscellaneous Amendments

AGENCY: Federal Aviation Administration (FAA), DOT.

ACTION: Final rule.

SUMMARY: This amendment adopts miscellaneous amendments to the required IFR (instrument flight rule) altitudes and changeover points for certain Federal airways, jet routes, or direct routes for which a minimum or maximum en route authorized IFR altitude is prescribed. These regulatory actions are needed because of changes occurring in the National Airspace System. These changes are designed to provide for the safe and efficient use of the navigable airspace under instrument conditions in the affected areas.

EFFECTIVE DATE: December 25, 1980.

FOR FURTHER INFORMATION CONTACT: Donald K. Funai, Flight Procedures and Airspace Branch (AFO-730), Aircraft Programs Division, Office of Flight Operations, Federal Aviation Administration, 800 Independence Avenue, SW., Washington, D.C. 20591; telephone: (202) 426-8277.

SUPPLEMENTARY INFORMATION: This amendment to Part 95 of the Federal Aviation Regulations (14 CFR Part 95) prescribes new, amended, suspended, or revoked IFR altitudes governing the operation of all aircraft in IFR flight over a specified route or any portion of that route, as well as the changeover points (COPs) for Federal airways, jet routes, or direct routes as prescribed in Part 95. The specified IFR altitudes, when used in conjunction with the prescribed changeover points for those routes, ensure navigation aid coverage that is adequate for safe flight operations and free of frequency interference.

The reasons and circumstances which create the need for this amendment involve matters of flight safety, operational efficiency in the National Airspace System, and are related to published aeronautical charts that are essential to the user and provides for the safe and efficient use of the navigable airspace. In addition, those various reasons or circumstances require making this amendment effective before the next scheduled charting and publication date of the flight information to assure its timely availability to the user. The effective date of this amendment reflects those considerations. In view of the close and immediate relationship between these regulatory changes and safety in air commerce, I find that notice and public procedure before adopting this amendment is unnecessary, impracticable, or contrary to the public interest and that good cause exists for making the amendment effective in less than 30 days.

Adoption of the Amendment

Accordingly and pursuant to the authority delegated to me by the Administrator, Part 95 of the Federal Aviation Regulation (14 CFR Part 95) is amended as follows effective at 0901 G.m.t.

(Secs. 307 and 1110, Federal Aviation Act of 1958 (49 U.S.C. 1348 and 1510); Sec. 6(c), Department of Transportation Act (49 U.S.C. 1655(c)); and 14 CFR 11.49(b)(3))

Note.—The FAA has determined that this document involves a regulation which is not significant under Executive Order 12044, as implemented by DOT Regulatory Policies and Procedures (44 FR 11034; February 26, 1979). Since this regulatory action involves an established body of technical requirements for which frequent and routine amendments are necessary to keep them operationally current and promote safe flight operations, the anticipated impact is so minimal that this action does not warrant preparation of a regulatory evaluation.

Issued in Washington, D.C., on December 2, 1980.

John S. Kern,

Chief, Aircraft Programs Division.

BILLING CODE 4910-13-M

§95.1001 DIRECT ROUTES–U.S.

is amended to delete:

FROM	TO	MEA
Drake, Ark. VOR *3900–MOCA	Burns INT, Ark. Via 124 M rad DAK	*6000
Drake, Ark. VOR *3500–MOCA	Burns INT, Ark. Via 124 M rad DAK	*6000
Drake, Ark. VOR	Stows INT, Ark.	4000
Overs INT, S.C. *1300–MOCA	Myrtle Beach, S.C. VOR	*2500
Vance, S.C. VOR *1400 – MOCA	Verty INT, S.C.	*2000
Stows INT, Ark. *3000–MOCA	Burns INT, Ark.	*6000

§95.1001 DIRECT ROUTES–U.S.

is added to read:

FROM	TO	MEA
Cunningham, Ky. VORTAC	Engen INT, Ill. COP 74 CNG	3000
Drake, Ark. VOR	Zebra INT, Ark.	3700
INT 331 M Rad Ukiah VOR and 134 M Rad Arcata VOR	Brilo INT, Calif.	11000
Jacksonville, Fla. VORTAC	Ft. Myers, Fla. VORTAC	24000 MAA–45000
Jacksonville, Fla. VORTAC	Gainesville, Fla. VORTAC	24000 MAA–45000
Kearney, Nebr. VOR	Mankato, Kans. VOR	4200
Mankato, Kans. VOR *3100–MOCA	Salina, Kans. VOR	*3400
North Platte, Nebr. VOR *4200–MOCA	Kearney, Nebr. VOR	*5000
Scottsbluff, Nebr. VOR	Aberdeen, S.D. VOR	23000
Zebra INT, Ark.	Stows INT, Ark.	4000
Stows INT, Ark. *4000–MOCA	Hawk INT, Ark.	*6000
Zodia, Mo. NDB	Foristel, Mo. VOR COP 46 FTZ	2800

§95.1001 DIRECT ROUTES–U.S.

is amended to read:

FROM	TO	MEA
Brilo INT, Calif.	Yager INT, Calif.	11000
Ukiah, Calif. VOR *6600–MOCA	INT 331 M Rad Ukiah VOR and 134 M Rad Arcata VOR	*11000

§95.6002 VOR FEDERAL AIRWAY 2

is amended to read in part:

FROM	TO	MEA
Dykes INT, Mich. *2000–MOCA	U.S. Canadian Border	*4500

§95.6003 VOR FEDERAL AIRWAY 3

is amended to delete:

FROM	TO	MEA
Vero Beach, Fla. VOR	Smyra INT, Fla.	2000
Smyra INT, Fla.	Ormond Beach, Fla. VOR	1600

§95.6003 VOR FEDERAL AIRWAY 3

is amended by adding:

FROM	TO	MEA
Vero Beach, Fla. VOR	Melbourne, Fla. VOR	2000
Melbourne, Fla. VOR	Smyra INT, Fla.	2000
Smyra INT, Fla.	Ormond Beach, Fla. VOR	1600
Melbourne, Fla. VOR Via W alter.	Kizer INT, Fla. Via W alter.	3000
Kizer INT, Fla. Via W alter.	Ormond Beach, Fla. VOR Via W alter.	2700
Linden, Va. VOR	Shawnee, Va. VOR	5000

§95.6004 VOR FEDERAL AIRWAY 4

is amended to read in part:

FROM	TO	MEA
Shawnee, Va. VOR	Armel, Va. VOR	5000

§95.6018 VOR FEDERAL AIRWAY 18

is amended to read in part:

FROM	TO	MEA
Sacks INT, S.C.	Charleston, S.C. VOR	2000

§95.6023 VOR FEDERAL AIRWAY 23

is amended by adding:

FROM	TO	MEA
Seattle, Wash. VOR	Paine, Wash. VOR	3000
Paine, Wash. VOR	Egret INT, Wash.	4500
Egret INT, Wash.	Bellingham, Wash. VOR	3500
Bellingham, Wash. VOR *2600–MOCA	U.S. Canadian Border	*3000

§95.6039 VOR FEDERAL AIRWAY 39

is amended to read in part:

FROM	TO	MEA
Linden, Va. VOR	Shawnee, Va. VOR	5000

§95.6051 VOR FEDERAL AIRWAY 51

is amended to delete:

FROM	TO	MEA
Vero Beach, Fla. VOR	Smyra INT, Fla.	2000
Smyra INT, Fla.	Ormond Beach, Fla. VOR	1600
Livingston, Tenn. VOR Via E alter. *2900–MOCA	Girls INT, Ky. Via E alter.	*3500
Girls INT, Ky. Via E alter. *2400–MOCA	Louisville, Ky. VOR Via E alter.	*3000

§95.6051 VOR FEDERAL AIRWAY 51

is amended by adding:

FROM	TO	MEA
Vero Beach, Fla. VOR	Melbourne, Fla. VOR	2000
Melbourne, Fla. VOR	Smyra INT, Fla.	2000
Smyra INT, Fla.	Ormond Beach, Fla. VOR	1600

§95.6053 VOR FEDERAL AIRWAY 53

is amended to read in part:

FROM	TO	MEA
Charleston, S.C VOR	Sacks INT, S.C.	2000

§95.6054 VOR FEDERAL AIRWAY 54

is amended to read in part:

FROM	TO	MEA
Texarkana, Ark. VOR Via N alter. *1800–MOCA	Pikes INT, Ark. Via N alter.	*3500

§95.6058 VOR FEDERAL AIRWAY 58

is amended by adding:

FROM	TO	MEA
Grace INT, Pa.	Eared INT, Pa.	3300
Eared INT, Pa.	Philipsburg, Pa. VOR	6000

§95.6083 VOR FEDERAL AIRWAY 83

is amended to read in part:

FROM	TO	MEA
Santa Fe, N.M. VOR	Nambe DME Fix, N.M.	
	N-bound	11000
	S-bound	9000

§95.6114 VOR FEDERAL AIRWAY 114
is amended to read in part:

FROM	TO	MEA
Walke INT, La.	New Orleans, La. VOR	
Via N alter.	Via N alter.	1800

§95.6133 VOR FEDERAL AIRWAY 133
is added to read:

FROM	TO	MEA
International Falls, Minn. VOR	U.S. Canadian Border	*3000
*2500-MOCA		

§95.6140 VOR FEDERAL AIRWAY 140
is amended to delete:

FROM	TO	MEA
Nashville, Tenn. VOR	Frite INT, Ky.	
Via N alter.	Via N alter.	2700
Frite INT, Ky.	*Bafin INT, Ky.	
Via N alter.	Via N alter.	**5500
*4500-MRA		
**2400-MOCA		
Bafin INT, Ky.	London, Ky. VOR	
Via N alter	Via N alter.	*4500
*2700-MOCA		

§95.6144 VOR FEDERAL AIRWAY 144
is amended to read in part:

FROM	TO	MEA
Linden, Va. VOR	Sprig INT, Va.	5000

§95.6152 VOR FEDERAL AIRWAY 152
is amended to delete:

FROM	TO	MEA
St. Petersburg, Fla. VOR	Orlando, Fla. VOR	2000
Orlando, Fla. VOR	*Jesup INT, Fla.	1700
*3500-MRA		
Jesup INT, Fla.	*Lamma INT, Fla.	**2000
*3000-MRA		
**1400-MOCA		
*Lamma INT, Fla.	Ormond Beach, Fla. VOR	1600
*3000-MRA		

§95.6152 VOR FEDERAL AIRWAY 152
is amended by adding:

FROM	TO	MEA
St. Petersburg, Fla. VOR	Jensn INT, Fla.	2000
Jensn INT, Fla.	Ormond Beach, Fla. VOR	2700

§95.6159 VOR FEDERAL AIRWAY 159
is amended by adding:

FROM	TO	MEA
Presk INT, Fla.	Cermo INT, Fla.	
Via S alter.	Via S alter.	5000
Cermo INT, Fla.	Ocala, Fla. VOR	
Via S alter.	Via S alter.	2000

§95.6167 VOR FEDERAL AIRWAY 167
is amended to read in part:

FROM	TO	MEA
Hartford, Conn. VOR	Jewit INT, Ct.	*2600
*2100-MOCA		
Jewit INT, Ct.	Providence, RI VOR	*2500
*1800-MOCA		

§95.6174 VOR FEDERAL AIRWAY 174
is amended by adding:

FROM	TO	MEA
Elkins, W.Va. VOR	*Knead INT, Va.	6000
*6800-MRA		

§95.6198 VOR FEDERAL AIRWAY 198
is amended to read in part:

FROM	TO	MEA
Seeds INT, Tex.	Wemar INT, Tex.	
Via N alter.	Via N alter.	2500

§95.6214 VOR FEDERAL AIRWAY 214
is amended to read in part:

FROM	TO	MEA
Wooley INT, Md.	Baltimore, Md. VOR	2500

§95.6221 VOR FEDERAL AIRWAY 221
is amended to read in part:

FROM	TO	MEA
Dykes INT, Mich.	U.S. Canadian Border	*4500
*2000-MOCA		

§95.6267 VOR FEDERAL AIRWAY 267
is amended to delete:

FROM	TO	MEA
Orlando, Fla. VOR	*Jesup INT, Fla.	
Via E alter.	Via E alter.	1700
*3500-MRA		
Jesup INT, Fla.	*Lamma INT, Fla.	
*3000-MRA		
Via E alter.	Via E alter.	**2000
**1400-MOCA		
*Lamma INT, Fla.	Ormond Beach, Fla. VOR	
Via E alter.	Via E alter.	1600
*3000-MRA		

§95.6268 VOR FEDERAL AIRWAY 268
is amended to read in part:

FROM	TO	MEA
Westminister, Md. VOR	Baltimore, Md. VOR	2500

§95.6278 VOR FEDERAL AIRWAY 278
is amended to read in part:

FROM	TO	MEA
Warlo INT, Ark.	Hampt INT, Ark.	*5000
*1700-MOCA		

§95.6280 VOR FEDERAL AIRWAY 280
is amended to read in part:

FROM	TO	MEA
Roswell, N.M. VOR	Debra INT, N.M.	*6500
*5700-MOCA		

§95.6285 VOR FEDERAL AIRWAY 285
is amended to read in part:

FROM	TO	MEA
Kokomo, Ind. VOR	Goshen, Ind. VOR	2600

§95.6332 VOR FEDERAL AIRWAY 332
is added to read:

FROM	TO	MEA
Friant, CA VORTAC	Hangtown, CA VOR	8500
Hangtown, CA VOR	Red Bluff, CA VORTAC	6000

§95.6338 VOR FEDERAL AIRWAY 338
is added to read:

FROM	TO	MEA
Linden, CA VORTAC	*Hangtown, CA VOR	5000
*7000-MCA Hangtown VOR, NE-bound		
Hangtown, CA VOR	Lake Tahoe, CA VORTAC	11000

§95.6402 HAWAII VOR FEDERAL AIRWAY 2
is amended to read in part:

FROM	TO	MEA
Lihue, Hawaii VOR	Morey INT, Hawaii	
	SE-bound	3000
	NW-bound	4000
Honolulu, Hawaii VOR	Lanai, Hawaii VOR	4000

§95.6412 HAWAII VOR FEDERAL AIRWAY 12
is amended to read in part:

FROM	TO	MEA
Koko Head, Hawaii VOR	Gritl INT, Hawaii	4500
Gritl INT, Hawaii	Bambo INT, Hawaii	*4500
*2000-MOCA		
Bambo INT, Hawaii	Maggi INT, Hawaii	*5000
*2000-MOCA		
Maggi INT, Hawaii	*Shark INT, Hawaii	
	NE-bound	**13000
	SW-bound	**5000
*13000-MRA		
** 2000-MOCA		

§95.6400 VOR FEDERAL AIRWAY 400
is added to read:

FROM	TO	MEA
U.S. Canadian Border	Presque Isle, Me. VOR	*11000
*4000-MOCA		

§95.6421 VOR FEDERAL AIRWAY 421
is amended to read in part:

FROM	TO	MEA
Gallup, N.M. VORTAC	Derma INT, N.M.	
Via W alter.	Via W alter.	*13000
*11300-MOCA		

§95.6440 VOR FEDERAL AIRWAY 440
is amended to read in part:

FROM	TO	MEA
Frida INT, Alas.	*Punti INT, Alas.	# 10000
*13000-MRA		

#MEA is established with a gap in navigation signal coverage.

§95.6441 VOR FEDERAL AIRWAY 441
is amended to delete:

FROM	TO	MEA
Dades INT, Fla.	Ocala, Fla. VOR	
Via E alter.	Via E alter.	*2000
*1400-MOCA		

§95.6441 VOR FEDERAL AIRWAY 441
is amended by adding:

Dades INT, Fla.	Ocala, Fla. VOR	
Via E alter.	Via E alter.	2000

§95.7065 JET ROUTE NO. 65 is amended by adding:

FROM	TO	MEA	MAA
Red Bluff, Ca.	Klamath Falls, Or. VORTAC	31000	45000
Klamath Falls, Or. VORTAC	Seattle, Wa. VORTAC	18000	45000

§95.7134 JET ROUTE NO. 134 is amended to read in part:

FROM	TO	MEA	MAA
Falmouth, Ky. VOR	Henderson, W.Va. VOR	18000	
Henderson, W.Va. VOR	Shawnee, Va. VOR	18000	

§95.7153 JET ROUTE NO. 153 is added to read:

FROM	TO	MEA	MAA
Rome, Or. VORTAC	Baker, Or. VORTAC	18000	45000
Baker, Or. VORTAC	Spokane, Wa. VORTAC	18000	45000

§95.7182 JET ROUTE NO. 182 is added to read:

FROM	TO	MEA	MAA
Goodland, Ks. VORTAC	Wichita, Ks. VORTAC	18000	45000
Wichita, Ks. VORTAC	Razorback, Ar. VORTAC	18000	45000

2. By amending Sub-part D as follows:

§95.8003 VOR FEDERAL AIRWAY CHANGEOVER POINTS

AIRWAY SEGMENT FROM	TO	CHANGEOVER POINT DISTANCE	FROM
V-2 is amended by adding:			
Honolulu, Hi. VOR	Lanai, Hi. VOR	29	Honolulu
V-44 is amended to read:			
Morgantown, W.Va. VORTAC	Keyer INT, W.Va.	53	Morgantown
V-186 is amended to read:			
Van Nuys, Calif. VOR	Paradise, Calif. VOR	22	Van Nuys
V-440 is amended to read in part:			
Anchorage, Ak. VOR	Middleton Island, Ak. VOR	60	Anchorage

AIRWAY SEGMENT FROM	TO	CHANGEOVER POINT DISTANCE	FROM
J-65 is added to read:			
Seattle, Wa. VORTAC	Klamath Falls, Or. VORTAC	181	Seattle
J-153 is added to read:			
Baker, Or. VORTAC	Spokane, Wa. VORTAC	60	Baker

The following Airways V22, V317, and V460 were received too late for correct numeric sequence.

§95.6022 VOR FEDERAL AIRWAY 22
is added to read:

FROM	TO	MEA
Oceanside, Calif. VOR	Haile INT, Calif.	3000
Haile INT, Calif.	Poggi, Calif. VOR	5000

§95.6317 VOR FEDERAL AIRWAY 317
is added to read:

FROM	TO	MEA
Mission Bay, Calif. VOR	Poggi, Calif. VOR	4500
Poggi, Calif. VOR	Imperial, Calif. VOR	7000

§95.6460 VOR FEDERAL AIRWAY 460
is amended by adding:

FROM	TO	MEA
Poggi, Calif. VOR	Julian, Calif. VOR	8600

[FR Doc. 80-38343 Filed 12-10-80; 8:45 am]
BILLING CODE 4910-13-C

14 CFR Part 97

[Docket No. 21146; Amdt. No. 1179]

Standard Instrument Approach Procedures; Miscellaneous Amendments

AGENCY: Federal Aviation Administration (FAA), DOT.

ACTION: Final rule.

SUMMARY: This amendment establishes, amends, suspends, or revokes Standard Instrument Approach Procedures (SIAPs) for operations at certain airports. These regulatory actions are needed because of the adoption of new or revised criteria, or because of changes occurring in the National Airspace System, such as the commissioning of new navigational facilities, addition of new obstacles, or changes in air traffic requirements. These changes are designed to provide safe and efficient use of the navigable airspace and to promote safe flight operations under instrument flight rules at the affected airports.

DATES: An effective date for each SIAP is specified in the amendatory provisions.

ADDRESSES: Availability of matters incorporated by reference in the amendment is as follows:

For examination—

1. FAA Rules Docket, FAA Headquarters Building, 800 Independence Avenue, SW., Washington, D.C. 20591;
2. The FAA Regional Office of the region in which the affected airport is located; or
3. The Flight Inspection Field Office which originated the SIAP.

For Purchase—

Individual SIAP copies may be obtained from:

1. FAA Public Information Center (APA-430), FAA Headquarters Building, 800 Independence Avenue, SW., Washington, D.C. 20591; or
2. The FAA Regional Office of the region in which the affected airport is located.

By Subscription—

Copies of all SIAPs, mailed once every 2 weeks, may be ordered from Superintendent of Documents, U.S. Government Printing Office, Washington, D.C. 20402. The annual subscription price is $135.00.

FOR FURTHER INFORMATION CONTACT: Donald K. Funai, Flight Procedures and Airspace Branch (AFO-730), Aircraft Programs Division, Office of Flight Operations, Federal Aviation Administration, 800 Independence Avenue, SW., Washington, D.C. 20591; telephone (202) 426-8277.

SUPPLEMENTARY INFORMATION: This amendment to Part 97 of the Federal Aviation Regulations (14 CFR Part 97) prescribes new, amended, suspended, or revoked Standard Instrument Approach Procedures (SIAPs). The complete regulatory description of each SIAP is contained in official FAA form documents which are incorporated by reference in this amendment under 5 U.S.C. 552(a), 1 CFR Part 51, and § 97.20 of the Federal Aviation Regulations (FARs). The applicable FAA Forms are identified as FAA Forms 8260-3, 8260-4 and 8260-5. Materials incorporated by reference are available for examination or purchase as stated above.

The large number of SIAPs, their complex nature, and the need for a special format make their verbatim publication in the Federal Register expensive and impractical. Further, airmen do not use the regulatory text of the SIAPs, but refer to their graphic depiction on charts printed by publishers of aeronautical materials. Thus, the advantages of incorporation by reference are realized and publication of the complete description of each SIAP contained in FAA form document is unnecessary. The provisions of this amendment state the affected CFR (and FAR) sections, with the types and effective dates of the SIAPs. This amendment also identifies the airport, its location, the procedure identification and the amendment number.

This amendment to Part 97 is effective on the date of publication and contains separate SIAPs which have compliance dates stated as effective dates based on related changes in the National Airspace System or the application of new or revised criteria. Some SIAP amendments may have been previously issued by the FAA in a National Flight Data Center (FDC) Notice to Airmen (NOTAM) as an emergency action of immediate flight safety relating directly to published aeronautical charts. The circumstances which created the need for some SIAP amendments may require making them effective in less than 30 days. For the remaining SIAPs, an effective date at least 30 days after publication is provided.

Further, the SIAPs contained in this amendment are based on the criteria contained in the U.S. Standard for Terminal Instrument Approach Procedures (TERPs). In developing these SIAPs, the TERPS criteria were applied to the conditions existing or anticipated at the affected airports. Because of the close and immediate relationship between these SIAPs and safety in air commerce, I find that notice and public procedure before adopting these SIAPs is unnecessary, impracticable, or contrary to the public interest and, where applicable, that good cause exists for making some SIAPs effective in less than 30 days.

Adoption of the Amendment

Accordingly, pursuant to the authority delegated to me, Part 97 of the Federal Aviation Regulations (14 CFR Part 97) is amended by establishing, amending, suspending, or revoking Standard Instrument Approach Procedures, effective at 0901 G.m.t. on the dates specified, as follows:

1. By amending § 97.23 VOR-VOR/DME SIAPs identified as follows:

. . . *Effective January 22, 1981*

Springdale, AR—Springdale Muni, VOR Rwy 18, Amdt. 7
Springdale, AR—Springdale Muni, VOR/DME Rwy 36, Original
Terre Haute, IN—Hulman Field, VOR Rwy 23, Amdt. 14
Algona, IA—Algona Muni, VOR/DME-A, Amdt. 3
Augusta, KS—Augusta Muni, VOR-A, Amdt. 3
Wichita, KS—Beech Factory, VOR-B, Amdt. 10
Wichita, KS—Cessna Acft Field, VOR-C, Amdt. 2
Wichita, KS—Colonel James Jabara, VOR-A, Amdt. 1
Wichita, KS—Copeland, VOR-D, Amdt. 1
Bastrop, LA—Morehouse Memorial, VOR/DME-A, Amdt. 5
Hammond, LA—Hammond Muni, VOR Rwy 31, Amdt. 1
Beverly, MA—Beverly Muni, VOR Rwy 16, Amdt. 2
Marthas Vineyard, MA—Marthas Vineyard, VOR Rwy 24, Amdt. 9
Hastings, MI—Hastings Muni, VOR Rwy 12, Amdt. 5
Standish, MI—Standish Industrial, VOR-A, Amdt. 2
Traverse City, MI—Cherry Capital, VOR-A (TAC), Amdt. 15
Duluth, MN—Duluth Intl, VOR Rwy 3 (TAC), Amdt. 15
Duluth, MN—Duluth, Intl, VOR/DME or TACAN Rwy 21, Amdt. 10
Bay St. Louis, MS—Stennis International, VOR-A, Amdt. 4
Somerville, NJ—Somerset, VOR-A, Original
New York, NY—John F. Kennedy Intl, VOR Rwy 4 L/R, Amdt. 13
Wadesboro, NC—Anson County, VOR/DME-A, Original
Williamston, NC—Martin County, VOR-A, Amdt. 2, cancelled
Downingtown, PA—Bob Shannon Memorial Field, VOR-A, Amdt. 1
Quarryville, PA—Tanglewood, VOR/DME-B, Original
Clarksville, TN—Outlaw Field, VOR Rwy 34, Amdt. 11

Savannah, TN—Savannah-Hardin County, VOR/DME Rwy 18, Amdt. 2
Lynchburg, VA—Lynchburg Muni-Preston Glenn Field, VOR Rwy 3, Amdt. 9
Baraboo, WI—Baraboo Wisconsin Dells, VOR-A, Amdt. 8
Prairie du Chien, WI—Prairie du Chien Muni, VOR/DME Rwy 29, Amdt. 3

. . . *Effective December 25, 1980*

Riverside, CA—Riverside Muni, VOR-A, Amdt. 4
Riverside, CA—Riverside Muni, VOR Rwy 9, Amdt. 9
New Haven, CT—Tweed-New Haven, VOR Rwy 2, Amdt. 17
New Haven, CT—Tweed-New Haven, VOR Rwy 20, Amdt. 2
Newburgh, NY—Stewart, VOR Rwy 16, Amdt. 2
Newburgh, NY—Stewart, VOR Rwy 27, Amdt. 2

. . . *Effective November 19, 1980*

Atlantic City, NJ—Atlantic City Muni/Bader Field, VOR-A, Amdt. 1

2. By amending § 97.25 SDF-LOC-LDA SIAPs identified as follows:

. . . *Effective January 22, 1981*

Denver, CO—Stapleton Intl, LOC/DME BC Rwy 17R, Amdt. 15
Terre Haute, IN—Hulman Field, LOC BC Rwy 23, Amdt. 14
Clarksville, TN—Outlaw Field, LOC Rwy 34, Amdt. 2

. . . *Effective December 25, 1980*

Nashua, NH—Boire Field, LOC Rwy 14, Original, cancelled
Gillette, WY—Gillette-Campbell County, LOC Rwy 33, Original

3. By amending § 97.27 NDB/ADF SIAPs identified as follows:

. . . *Effective January 22, 1981*

Tampa, FL—Peter O. Knight, NDB Rwy 3, Amdt. 9
Algona, IA—Algona Muni, NDB Rwy 12, Amdt. 2
Bloomfield, IA—Bloomfield Muni, NDB Rwy 36, Amdt. 1
Boone, IA—Boone Muni, NDB Rwy 14, Amdt. 5
Boone, IA—Boone Muni, NDB Rwy 32, Amdt. 1
Charles City, IA—Charles City Muni, NDB Rwy 12, Amdt. 7
North Vernon, IN—North Vernon, NDB Rwy 5, Amdt. 2
Wellington, KS—Wellington Muni, NDB Rwy 17, Original
Bastrop, LA—Morehouse Memorial, NDB Rwy 34, Amdt. 2
Beverly, MA—Beverly Muni, NDB-A, Amdt. 7
Fitchburg, MA—Fitchburg Muni, NDB-A, Amdt. 7
Duluth, MN—Duluth Intl, NDB Rwy 9, Amdt. 19
Alamogordo, NM—Alamogordo-White Sands Regional, NDB Rwy 3, Original
Elmira, NY—Chemung County, NDB Rwy 24, Amdt. 9
Monticello, NY—Sullivan County Int'l, NDB Rwy 15, Amdt. 3
Ponca City, OK—Ponca City Muni, NDB Rwy 35, Original
Allentown, PA—Allentown-Bethlehem-Easton, NDB Rwy 6, Amdt. 16
Clarksville, TN—Outlaw Field, NDB Rwy 16, Amdt. 4
Clarksville, TN—Outlaw Field, NDB Rwy 34, Amdt. 2
Savannah, TN—Savannah-Hardin County, NDB Rwy 36, Amdt. 3
Houston, TX—Baytown, NDB Rwy 13, Original
Houston, TX—Baytown, NDB Rwy 31, Amdt. 1
Mexia, TX—Mexia-Limestone County, NDB-A, Amdt. 1
Midland, TX—Midland Regional, NDB Rwy 10, Amdt. 8

. . . *Effective December 25, 1980*

Millinocket, ME—Millinocket Muni, NDB Rwy 29, Original
Newburgh, NY—Stewart, NDB Rwy 9, Amdt. 3

4. By amending § 97.29 ILS-MLS SIAPs identified as follows:

. . . *Effective January 22, 1981*

Denver, CO—Stapleton Intl, ILS/DME Rwy 17L, Amdt. 2
Marthas Vineyard, MA—Marthas Vineyard, ILS Rwy 24, Amdt. 5
Duluth, MN—Duluth Intl, ILS Rwy 9, Amdt. 14
Duluth, MN—Duluth Intl, ILS Rwy 27, Amdt. 3
Midland, TX—Midland Regional, ILS Rwy 10, Amdt. 11
San Antonio, TX—San Antonio Intl, ILS Rwy 30L, Amdt. 5
Lynchburg, VA—Lynchburg Muni-Preston Glenn Field, ILS Rwy 3, Amdt. 10
Olympia, WA—Olympia, ILS Rwy 17, Amdt. 7

. . . *Effective December 25, 1980*

Livermore, CA—Livermore Muni, ILS Rwy 25, Original
Marysville, CA—Yuba County, ILS Rwy 14, Original
Riverside, CA—Riverside Muni, ILS Rwy 9, Amdt. 4
New Haven, CT—Tweed-New Haven, ILS Rwy 2, Amdt. 8
Nashua, NH—Boire Field, ILS Rwy 14, Original
McMinnville, OR—McMinnville Muni, ILS Rwy 22, Original

. . . *Effective November 27, 1980*

Chino, CA—Chino, ILS Rwy 26, Amdt. 1

5. By amending § 97.31 RADAR SIAPs identified as follows:

. . . *Effective January 22, 1981*

Tampa, FL—Peter O. Knight, RADAR-1, Amdt. 3
Houston, TX—Baytown, RADAR-1, Amdt. 1

. . . *Effective January 8, 1981*

Saginaw, MI—Tri-City, RADAR-1, Amdt. 5

6. By amending § 97.33 RNAV SIAPs identified as follows:

. . . *Effective January 22, 1981*

Wichita, KS—Beech Factory, RNAV Rwy 18, Amdt. 3
Wichita, KS—Beech Factory, RNAV Rwy 36, Amdt. 5
Wichita, KS—Cessna Acft Field, RNAV Rwy 17L, Amdt. 1
Wichita, KS—Cessna Acft Field, RNAV Rwy 35R, Amdt. 1
Bay St. Louis, MS—Stennis International, RNAV Rwy 17, Amdt. 2

(Secs. 307, 313(a), 601, and 1110, Federal Aviation Act of 1958 (49 U.S.C. 1348, 1354(a), 1421, and 1510); Sec. 6(c), Department of Transportation Act (49 U.S.C. 1655(c)); and 14 CFR 11.49(b)(3))

Note.—The FAA has determined that this document involves a regulation which is not significant under Executive Order 12044, as implemented by DOT Regulatory Policies and Procedures (44 FR 11034; February 26, 1979). Since this regulatory action involves an established body of technical requirements for which frequent and routine amendments are necessary to keep them operationally current and promote safe flight operations, the anticipated impact is so minimal that this action does not warrant preparation of a regulatory evaluation.

Issued in Washington, D.C., on December 5, 1980.

John S. Kern,

Chief, Aircraft Programs Division.

Note.—The incorporation by reference in the preceding document was approved by the Director of the Federal Register on May 12, 1969.

[FR Doc. 80-33342 Filed 12-10-80; 8:45 am]
BILLING CODE 4910-13-M

FEDERAL TRADE COMMISSION

16 CFR Part 13

[Docket No. 9108]

E. I. du Pont de Nemours & Co.; Prohibited Trade Practices, and Affirmative Corrective Actions

AGENCY: Federal Trade Commission.

ACTION: Final order.

SUMMARY: This order sustains the initial decision of the Administrative Law Judge and dismisses the Complaint issued April 5, 1978 charging a Wilmington, Del. chemical manufacturer with attempting to monopolize the domestic titanium dioxide market. The Commission holds that since the conduct of the company was "consistent with its own technological capacity and market opportunities," it was "reasonable" and not a violation of law.

DATES: Complaint issued April 5, 1978. Final order issued October 20, 1980.[1]

[1] Copies of the Complaint, Initial Decision, Opinion, and Appendices and Final Order filed with the original document.

FOR FURTHER INFORMATION CONTACT: FTC/C, E. Perry Johnson, Washington, D.C. 20580. (202) 523-3601.

SUPPLEMENTARY INFORMATION: In the Matter of E. I. du Pont de Nemours & Co., a corporation.

(Sec. 6, 38 Stat. 721; (15 U.S.C. 46). Interprets or applies sec. 5, 38 Stat. 719, as amended; (15 U.S.C. 45))

The final order is as follows:

This matter has been heard by the Commission upon the appeal of complaint counsel from the initial decision and upon briefs and oral argument in support of and in opposition to the appeal. For the reasons stated in the accompanying Opinion, the Commission has determined to sustain the initial decision. Complaint counsel's appeal is denied. Accordingly,

It is ordered, That the complaint is dismissed.

By direction of the Commission.

Loretta Johnson,

Acting Secretary.

[FR Doc. 80-38365 Filed 12-10-80; 8:45 am]

BILLING CODE 6750-01-M

SECURITIES AND EXCHANGE COMMISSION

17 CFR Part 240

[Release Nos. 33-6268; 34-17353; and IC-11475]

Filing and Disclosure Requirements Relating to Beneficial Ownership

AGENCY: Securities and Exchange Commission.

ACTION: Final rule.

SUMMARY: The Commission announces the adoption of an amendment to Rule 13d-2(a) pertaining to the requirements for the filing of amendments to Schedule 13D. Schedule 13D specifies the information required to be included in reports of beneficial ownership filed pursuant to Rule 13d-1(a). This amendment removes the availability of an exception to the requirement for filing an amendment under Rule 13d-2(a), which provided that an amendment would not be required if the acquisition of shares of a class, together with all other acquisitions during the preceding twelve months, did not exceed two percent of that class. This is necessary to close a disclosure gap in the beneficial ownership reporting requirements.

EFFECTIVE DATE: January 12, 1981.

FOR FURTHER INFORMATION CONTACT: Prior to the effective date of the rule contact W. Scott Cooper (202-272-2589), Office of Disclosure Policy; thereafter, contact Joseph G. Connolly, Jr. (202-272-3097) or David B. Myatt (202-272-2707), Office of Tender Offers, Division of Corporation Finance, Securities and Exchange Commission, 500 North Capitol Street, NW., Washington, D.C. 20549.

SUPPLEMENTARY INFORMATION: The Securities and Exchange Commission today announced the adoption of an amendment to Rule 13d-2(a) (17 CFR 240.13d-2(a) under the Securities Exchange Act of 1934 (the "Exchange Act") (15 U.S.C. 78a et seq. (1976 and Supp. I 1977)). Rule 13d-2(a) sets forth the requirements for the filing of amendments to reports of beneficial ownership filed on Schedule 13D (17 CFR 240.13d-101). This amendment of Rule 13d-2(a) removes the availability of an exception to requirements for the filing of amendments previously available for an acquisition which, when taken together with all other acquisitions during the preceding twelve months, did not exceed two percent of the class. This action is a result, in part, of the Commission's ongoing examination of the beneficial ownership reporting requirements which was conducted in connection with the Commission's report to Congress pursuant to Section 13(h) of the Exchange Act.[1]

The amendment of Rule 13d-2(a) is based on the proposal as published for comment on April 16, 1980,[2] the comment received and the Commission's experience.

I. Background

As part of the Williams Act,[3] Pub. L. No. 90-439, 82 Stat. 454 (1968), Congress added Section 13(d) to the Exchange Act. Generally, Section 13(d)(1) and Rule 13d-1(a) (17 CFR 240.13d-1(a)) adopted thereunder require a report by any person (or group of persons) who, as a result of an acquisition, becomes the beneficial owner of more than five percent of certain classes of equity securities of certain issuers. The report, which is to be filed with the Commission, sent to the issuer and sent to any national securities exchange where the security is traded, is required to contain, among other things, information concerning the acquiring person, the nature of the beneficial ownership disclosed, the source and amount of funds used in the acquisition, the number of shares beneficially owned and any contracts or understandings with respect to any securities of the subject company.[4] The legislative history of that section indicates that it was intended to provide information to the public and the affected issuer about rapid accumulations of its equity securities by persons who would then have the potential to change or influence control of the issuer.[5]

Section 13(d)(2) of the Exchange Act provides that if a material change occurs in the information set forth in the report, an amendment shall be filed with the Commission and sent to the issuer and to any exchange in accordance with such rules and regulations as the Commission may prescribe. Rule 13d-2 (17 CFR 240.13d-2) as originally adopted implemented the authority under Section 13(d)(2) by merely re-stating the statutory requirements. In 1978, Rule 13d-2 was amended by Release No. 34-14692, April 21, 1978 (43 FR 18484), which established Regulation 13D-G and new Rule 13d-2 for the filing of amendments to Schedule 13D and Schedule 13G (17 CFR 240.13d-102). Rule 13d-2(a) provides that if a material change occurs in the information set forth in a statement required in Rule 13d-1(a), including but not limited to an increase or decrease in the percentage of the class beneficially owned, the person who was required to report shall file and send an amendment disclosing the changes. Under Rule 13d-2(a), an acquisition or disposition of beneficial ownership of securities in an amount equal to one percent of more of the class of securities is deemed to be "material" for the purposes of this rule, but acquisitions or dispositions of less than such amount may be material, depending upon the facts and circumstances. The next-to-last sentence of Rule 13d-2(a) provides, however, that the requirement that an amendment be filed with respect to an acquisition which materially increases the percentage of the class beneficially owned shall not apply if such acquisition is exempted by Section 13(d)(6)(B) of the Exchange Act.

New Rule 13d-2(a) reversed and at the same time incorporated certain interpretive positions taken by the staff of the Commission. First, the Commission reversed a position previously taken whereby each acquisition made after the five percent

[1] The report of the Commission pursuant to Section 13(h) was submitted to Congress on June 27, 1980.

[2] Release No. 34-16748 (45 FR 27781).

[3] Sections 13(d), 13(e), 14(d), 14(e), and 14(f) of the Exchange Act.

[4] The specific disclosure requirements are set forth in Schedule 13D.

[5] S. Rep. No. 550, 90th Cong., 1st Sess. 7 (1967); H.R. Rep. No. 1711, 90th Cong., 2d Sess. 8 (1968); *see also* Hearings on S. 510. Before the Subcomm. on Securities of the Senate Comm. on Banking and Currency, 90th Cong., 1st Sess. (1967).

threshold was exceeded, no matter how small, was viewed as triggering a new filing requirement under Section 13(d)(1) to be satisfied by the filing of an original Schedule 13D.[6] The position was reversed because the Commission believed that the burden of filing a Schedule 13D is not justified with respect to the acquisition or disposition of an immaterial amount of stock.[7] Second, prior interpretative positions were incorporated and made clear by including in Rule 13d-2(a) the provisions which excepted less than two percent acquisitions from the amendment requirements pursuant to Section 13(d)(6)(B).[8]

Section 13(d)(6)(B) states that the provisions of Section 13(d) shall not apply to any acquisition of the beneficial ownership of a security which, together with all other acquisitions by the same person of the securities of the same class during the preceding twelve months, does not exceed 2 percent of that class. This exemption is based on the belief that slow acquisitions totalling less than two percent within a twelve month period are unlikely to affect control.[9] This exemption operates on a rolling twelve-month basis, that is, for any acquisition to be exempt under Section 13(d)(6)(B) from the reporting obligation, it must, when taken together with all other acquisitions of beneficial ownership by the same person of securities of the same class during the preceding twelve months, not exceed two percent of the class.

II. Discussion

Of the six comment letters [10] received, three commentators agreed with the Commission's belief that acquisitions of less than two percent may be material and, if so, an amendment of the previously filed Schedule 13D should be required. Two of these commentators suggested that the Commission take additional steps in connection with the alteration of the requirements for the filing of amendments to Schedule 13D. One suggestion was that the Commission add a note to Rule 13d-2(a) that would indicate that in the opinion of the Commission the exemption in Section 13(d)(6)(B) of the Exchange Act does not apply to the amendment requirements. This suggestion was based upon a concern that the differences in requirements between Section 13(d)(6)(B) and the rule as amended may be a source of confusion in the future. The other suggestion was to limit the effect of the amendment by revising the rule to require an amendment for an acquisition of one percent or more only if either (1) such acquisition, when coupled with acquisitions during the preceding twelve months, exceeds two percent of the class or (2) such acquisition is otherwise material under all facts and circumstances.

Two commentators opposed the elimination of this provision from Rule 13d-2(a). Their opposition was based on the view that the legislative history and the statutory language indicates that Section 13(d)(6)(B) applies to Section 13(d)(2) and the rules adopted thereunder. Moreover, these commentators questioned whether the Commission could utilize Section 13(g) to accomplish this amendment, and one commentator suggested that the Commission request additional legislation to close this gap.

The Commission believes, however, that Section 13(d)(6)(B) does not apply to the amendment requirements of Section 13(d)(2), and that the exemption under 13(d)(6)(B) conflicts with the requirement under Section 13(d)(2) for an amendment if a material change occurs within the facts set forth in a report filed under Section 13(d). Thus, the Commission believes it is no longer appropriate to interpret Section 13(d)(6)(B) as creating an exemption from Section 13(d)(2). Section 13(d)(2) imposes additional obligations on a person who is already within the beneficial ownership reporting system under Section 13(d). Section 13(d)(6)(B), by its terms, exempts from the beneficial ownership reporting system any person whose acquisitions are covered by its provisions. The contradication in these provisions lies in the fact that even though a person already within the reporting system has an obligation to amend a statement pursuant to Section 13(d)(2), Section 13(d)(6)(B) would exempt those additional acquisitions from the reporting system. However, the apparent contradiction can be resolved by resort to the legislative history of the Williams Act. The section-by-section summaries of the Williams Act in both House and Senate Reports state that the exemption presently found in Section 13(d)(6)(B) was to be from the filing requirements of Section 13(d)(1), and no mention is made of the amendment provisions of Section 13(d)(2).[11]

In addition, this interpretation comports with the Congressional purpose behind the statutory requirements. Section 13(d) was enacted to require disclosure of information by persons who have acquired a substantial interest, or increased their interest in the equity securities of a company by a substantial amount, within a relatively short period of time.[12] The focus was on the potential to influence control of the company by the acquisition of an equity interest of more than 5 percent of the company.[13] The two percent exemption in Section 13(d)(6)(B) provides definition to what would not be considered a rapid accumulation of an interest in the company. The two percent exemption should therefore not apply to amendments, because by acquiring five percent beneficial ownership the person has already acquired an interest in the company which has the potential to influence control of the company.[14] Moreover, an exception in the amendment requirements for acquisitions of less than two percent would have the effect of masking an acquisition which may indeed be material and important to the market, the company and its shareholders.[15]

Furthermore, the provision as it now stands creates an inappropriate gap in the comprehensive disclosure system of beneficial ownership. An acquisition of less than 2 percent during succeeding twelve month periods for a number of years could substantially increase the ownership of a particular person

[6] No-action letters: Gerald F. Fisher, Swiss Re Holding (North America) Inc., dated August 26, 1976; James E. Christensen of Law, Weathers, Richardson & Dutcher, dated January 13, 1976; and Wilbur C. Leonard, Esq., dated March 12, 1973.

[7] Release No. 34-14692, *supra*.

[8] No-action letter: James E. Christensen of Law, Weathers, Richardson & Dutcher, dated January 13, 1976.

[9] Comment, *Section 13(d) and Disclosure of Corporate Equity Ownership*, 119 U. Pa. L. Rev. 853, 865 (1971).

[10] One of the six commentators submitted a letter which argued against a change in the amendment requirements of Schedule 13G, which was not the subject of this rulemaking proceeding.

[11] H.R. Rep. No. 1711, 90th Cong., 2nd Sess., 9 (1968). S. Rep. No. 550, 90th Cong., 1st Sess. 8 (1967). This treatment of Section 13(d)(6)(B) must be compared with the treatment in the legislative history of the comparable exemption to Section 14(d). The same Senate and House reports, listed above, stated in the section-by-section summaries that Section 14(d)(8)(A) provides an exemption from all of Section 14(d).

[12] H.R. Rep. No. 1711, *supra*, at 8. S. Rep. No. 550, *supra*, at 7.

[13] Comment, *Section 13(d) and Disclosure of Corporate Equity Ownership*, *supra*, at 858.

[14] The lowering of the reporting threshold from ten to five percent for Section 13(d) was justified on the grounds that an investment of between five and ten percent of the securities of a company can have a significant impact on the public market for that company's stock, and shareholders are entitled to full disclosure when over five percent of the company's stock has been acquired. S. Rep. 91-1125, 91st Cong., 2d. Sess. 3 (1970).

[15] For example, an acquisition of 0.5% of the securities of a company within a twelve month period which increases the beneficial ownership of a particular person from 49.9% to 50.4% while presently excepted from disclosure would be a material event.

without a requirement for disclosure of that increased ownership. This result is contrary to the intent of Congress as evidenced by the enactment of Section 13(g) of the Exchange Act in 1977[16] which was designed to close inappropriate and anomalous gaps in the legislative scheme of disclosure under the Exchange Act and result in across-the-board disclosure essential to a cohesive and comprehensive reporting system.[17] The exemptions or gaps that Section 13(g) was to delete in the development of a comprehensive disclosure system were primarily those exemptions from Section 13(d) for persons who had acquired their interests before 1970 and persons who had acquired an interest of more than five percent through acquisitions of less than two percent within any twelve month period. In the Commission's view, it is anomalous to require material amendments from persons whose acquisitions were deemed to be unlikely to affect control[18] and at the same time to except from the reporting requirements information concerning acquisitions of a similar size by persons whose ownership has already reached a level which has the potential to influence control of the issuer.

The Commission believes that Sections 13(g)(1)(B) and 13(g)(2) of the Exchange Act provide a separate and independent basis of authority to require the reporting of any increase in ownership, whether above or below the two percent level. Section 13(g) was enacted to supplement the statutory scheme by providing legislative authority for certain additional disclosure requirements that in some cases could not be imposed administratively.[19] The broad authority under Section 13(g) was to be implemented by requiring a short statement detailing relevant ownership information[20] without extensive historical ownership and transaction information.[21] Under Section 13(g), the Commission has the authority to specify the frequency of reports and the events which trigger reporting. The results of the enactment of Section 13(g) was intended to be across-the-board disclosure esstential of a cohesive and comprehensive reporting system.[22] Thus, the Commission believes that Section 13(g) would provide authority to require the reporting of an increase in beneficial ownership, which would currently be exempted from the amendment requirements under Rule 13d-2(a), at whatever frequency and upon whatever events the Commission would deem necessary and appropriate. Consistent, however, with the direction in Section 13(g)(5),[23] the Commission believes that it is more appropriate to require this reporting by amendment to Schedule 13D rather than on Schedule 13G, because this approach will foster the development of a comprehensive reporting system while avoiding duplicative reporting requirements.[24]

Under this amendment to Rule 13d-2(a), the requirement to amend Schedule 13D will be governed by the materiality standards for acquisitions or dispositions set forth in Rule 13d-2(a). Thus, an acquisition or disposition of more than one percent will be presumed to be material and an amendment will be required to be filed promptly. Moreover, an acquisition or disposition of less than one percent, depending upon the facts and circumstances, may be deemed to be material. In contrast to the previous interpretative position incorporated into the present Rule 13d-2(a), the exemption under Section 13(d)(6)(B) would not apply to the amendment requirements.

III. Text of Amendment

17 CFR Part 240 is amended by amending paragraph (a) of § 240.13d-2 as follows:

PART 240—RULES AND REGULATIONS UNDER THE SECURITIES EXCHANGE ACT OF 1934

§ 240.13d-2 Filing of Amendments to Schedules 13d or 13g.

(a) Schedule 13D—If any material change occurs in the facts set forth in the statement required by Rule 13d-1(a) (§ 240.13d-1(a)), including, but not limited to, any material increase or decrease in the percentage of the class beneficially owned, the person or persons who were required to file such statement shall promptly file or cause to be filed with the Commission and send or cause to be sent to the issuer at its principal executive office, by registered or certified mail, and to each exchange on which the security is traded an amendment disclosing such change. An acquisition or disposition of beneficial ownership of securities in an amount equal to one percent or more of the class of securities shall be deemed "material" for purposes of this rule; acquisitions or dispositions of less than such amounts may be material, depending upon the facts and circumstances. Six copies of each such amendment shall be filed with the Commission.

* * * * *

(Sec. 2, 82 Stat. 454; sec. 1, 84 Stat. 1497; secs. 202, 203, 91 Stat. 1494, 1498, 1499; (15 U.S.C. 78m(d), 78m(g)))

Statutory Authority

The Commission hereby amends Rule 13d-2(a) pursuant to Section 13(d) and Section 13(g) the Exchange Act.

By the Commission.

George A. Fitzsimmons,

Secretary.

December 4, 1980.

[FR Doc. 80-38538 Filed 12-10-80; 8:45 am]

BILLING CODE 8010-01-M

---

17 CFR Part 241

[Release No. 34-17354]

Interpretative Release Relating to Beneficial Ownership Rules.

AGENCY: Securities and Exchange Commission.

---

[16] Sections 13(g) was added to the Exchange Act by the Domestic and Foreign Investment Improved Disclosure Act of 1977, Pub. L. No. 95-213, § 203, 91 Stat. 1499. Section 13(g)(1) requires any person owning beneficially more than five percent of Section 13(d) securities to file with the Commission a short statement detailing relevant ownership information and to transmit such ownership statement to the issuer.

[17] S. Rep. No. 95-114, 95th Cong., 1st Sess. 6 (1977).

[18] Section 13(g)(2) governs amendments to reports filed under Section 13(g) and is substantially the same as Section 13(d)(2), but Section 13(g) has no provision analogous to Section 13(d)(6)(B). Rule 13d-2(b) (17 CFR 240.13d-2(b)) adopted under Section 13(g)(2) requires an annual amendment to Schedule 13G and has no exception for acquisitions exempted by Section 13(d)(6)(B).

[19] S. Rep. No. 114, 95th Cong., 1st Sess. 13 (1977).

[20] *Id.*

[21] H.R. Rep. No. 95-831, 95th Cong., 1st Sess. 14 (1977); 123 Cong. Rec. S14902 (daily ed. December 6, 1977) (remarks of Senator Tower).

[22] 123 Cong. Rec. S19400 (daily ed. December 6, 1977) (remarks of Senator Williams).

[23] Section 13(g)(5) directs the Commission in exercising its authority under Section 13(g) to take such steps as it deems necessary or appropriate in the public interest or for the protection of investors to avoid unnecessarily duplicative reporting by and minimize the compliance burdens on persons required to report.

[24] It should be noted that an amendment to a statement filed on Schedule 13D is required to be filed promptly after the event which triggers the amendment requirement, but initial statements or amendments to a statement filed on Schedule 13G are required to be filed within 45 days of the end of the calendar year. As a result of requiring the reporting of the information currently excepted by the provisions of Rule 13d-2(a) as an amendment to a statement filed on Schedule 13D, the frequency of the amendments will be greater than would have been required if the provisions for the reporting of this information had become part of the rules as currently adopted by the Commission for the filing of statements on Schedule 13G. The Commission believes that this differing treatment is appropriate, because the persons who would be subject to reporting under this change in the amendment requirements have acquired their substantial interest in the securities of the issuer within a relatively shorter period of time than persons who would be required to file on Schedule 13G pursuant to Rule 13d-1(c).

ACTION: Publication of staff interpretations.

SUMMARY: The Securities and Exchange Commission today authorized the issuance of this release reflecting the views of the Division of Corporation Finance (the "Division") with respect to the requirements for filing amendments to beneficial ownership reports on Schedule 13D or Schedule 13G. The Division's views relate to the information required to be presented on the cover pages of amendments to statements filed on these schedules. These views are being published in response to a number of requests for interpretive advice received by the Division and to ensure the accuracy of beneficial ownership information.

FOR FURTHER INFORMATION CONTACT: Persons with specific questions concerning the subject matter of this release or the beneficial ownership reporting requirements in general should contact Joseph G. Connolly, Jr., (202) 272-3097 or David B. Myatt (202) 272-2707, Office of Tender Offers, Division of Corporation Finance, Securities and Exchange Commission, Washington, D.C. 20549.

SUPPLEMENTARY INFORMATION: On January 5, 1979, the Commission issued Release No. 34-15461 (44 FR 2022), which announced the adoption of the final provisions in the development of the comprehensive beneficial ownership reporting requirements under Regulation 13D-G (17 CFR 240.13d-1 through 240.13d-102). This release amended the filing requirements under Regulation 13D-G to expand the cover pages for Schedule 13D (17 CFR 240.13d-101) and Schedule 13G (17 CFR 240.13d-102). The expanded cover pages were adopted to assist in the tabulation of beneficial ownership information and to foster the public availability of the information contained in the schedules. The amendments provided that the persons filing the schedules would abstract certain data from within the statements and include this information in the cover page. This abstracted information was required to facilitate the entry of such data into a computer system.

The Division often receives requests for interpretative advice as to the appropriate information to be included on a cover page of an amendment to a statement filed on Schedules 13D and 13G. Also, the Division has an interest in promoting the accuracy and completeness of the beneficial ownership information received by the Commission in order to develop a complete and accurate tabulation of beneficial ownership information. Therefore, the Division has requested that the Commission publish these views with respect to the information required to be included in cover pages for amendments.

The requirements for the filing of amendments to Schedule 13D or Schedule 13G are found in Rule 13d-2 (17 CFR 240.13d-2). In general, an amendment to a filing on Schedule 13D is required to be filed promptly if any material change [1] occurs in the facts set forth in the Schedule 13D, including, but not limited to, any material increase or decrease in the percentage of securities beneficially owned. Rule 13d-2(b) provides that if a person continues to meet the requirements for filing Schedule 13G, such person shall amend a statement filed on Schedule 13G within 45 days after the end of the calendar year to reflect, as of the end of the calendar year, any changes in the information reported in the previous filing on that schedule, or if there are no changes from the previous filing a signed statement to that effect under cover of Schedule 13G.

The Division often receives requests for interpretive advice concerning the proper documents to be filed in the amendment process, particularly in the period during which amendments are required for statements filed on Schedule 13G. The Division also has an interest in ensuring that amendments are properly filed, because the comprehensive tabulation of beneficial ownership cannot be kept accurate if amendments are improperly filed. Therefore, the Division is presenting its views as to the required procedures for filing amendments to statements filed on Schedule 13D or Schedule 13G, in order that the public may be made aware of the proper requirements and to ensure that the information in the comprehensive tabulation is accurate.

Each amendment filed with respect to a change in the information disclosed previously on the cover page for a statement filed on Schedule 13D or Schedule 13G must include a cover page which includes all required information.[2] This requirement is stated on the cover page of Schedule 13D and Schedule 13G.[3] The provisions with respect to the information required on a cover page differ from the Division's informal interpretative position as to the textual items of the schedules. With respect to the textual items, the Division's position is that only those items in which there has been a change in the disclosed information must be included in an amendment.

However, this distinction is necessary to provide for a complete and accurate tabulation of beneficial ownership information. An amendment is often filed to a Schedule 13D or Schedule 13G where a cover page has not been previously filed. In those cases, without the entire amount of information it is extremely difficult to input the abstracted data. Also, cover pages have been filed with minimal identifying information and, as a result, it is difficult to identify the person filing the amendment or the issuer of the securities which are the subject of the filing.

With respect to statements of no change filed on Schedule 13G, Rule 13d-2(b) requires a signed statement to that effect under cover of Schedule 13G. The Division believes that this requirement means that each signed statement of no change must be filed with a Schedule 13G cover page with sufficient information to identify the issuer, the class of securities and the reporting person. If a cover page has never been filed with respect to this security holding, the Division believes that a full cover page is required to be filed with a statement of no change.[4]

As indicated in the instructions to the cover page, reporting persons may comply with the cover page reporting requirements by filing completed copies of the blank forms available from the

[1] Rule 13d-2(a) states that an acquisition or disposition of beneficial ownership of securities in an amount equal to one percent or more shall be deemed "material" for the purposes of the rule; acquisitions or dispositions of less than such amounts may be material, depending on the facts and circumstances. Rule 13d-2(a) previously provided that this requirement would not apply if the acquisition when taken together with all other acquisitions within the preceding twelve months does not exceed two percent. The Commission has today deleted this later exception from Rule 13d-2(a), so that the requirement for amendments will be the one percent test or materiality based on the facts and circumstances (Release No. 34-17353, December 4, 1980).

[2] For statements filed on Schedule 13D, there has been confusion with respect to the proper information to be supplied on the line of the cover page requesting the date of the event which required the filing. With respect to a cover page of an amendment to a statement filed on Schedule 13D, the date should refer to the event which required the filing of the amendment and not the event which required the initial filing.

[3] A note at the bottom of the cover page indicates that the whole cover page must be completed for the initial filing and for any subsequent amendment containing information which would alter disclosures provided in a prior cover page.

[4] In addition, the Division believes that this would be the procedure to be followed for those amendments to statements filed on Schedule 13D or possibly on Schedule 13G where there is no change to information abstracted on the cover page but where there is a change in information in the textual items of the schedule, *e.g.*, a change in the purpose of the transactions or a change in the persons who control the reporting person.

Commission, printed or typed facsimiles, or computer printed facsimiles, provided the documents filed have identical formats to the forms prescribed in the Commission's regulations and meet existing Exchange Act rules as to such matters as clarity and size. Blank copies of the cover pages may be obtained from "Publications," Securities and Exchange Commission, 500 North Capitol Street, Washington, D.C. 20549, (202) 272-2559.

Accordingly, 17 CFR Part 241 is amended by adding this release thereto.

By the Commission.

George A. Fitzsimmons,

Secretary.

December 4, 1980.

[FR Doc. 80-38452 Filed 12-10-80; 8:45 am]

BILLING CODE 8010-01-M

DEPARTMENT OF STATE

22 CFR Part 41

Bureau of Consular Affairs, Exchange Visitor Programs; Transfer of Responsibility

AGENCY: Department of State.

ACTION: Final rule.

SUMMARY: Section 41.65 "Exchange visitors" is amended to reflect the transfer of the responsibility relating to the administration of Exchange Visitor Programs from the Secretary of State to the Director of the International Communication Agency.

EFFECTIVE DATE: December 11, 1980.

FOR FURTHER INFORMATION CONTACT: Cornelius D. Scully III, Director, Office of Legislation, Regulations and Advisory Assistance, Visa Services, Bureau of Consular Affairs, 202-632-1980.

SUPPLEMENTARY INFORMATION: On April 8, 1978, under President Carter's Reorganization Plan No. 2 of 1977 (42 FR 62461), the United States Information Agency and the Bureau of Educational and Cultural Affairs were consolidated into the new International Communication Agency. Prior to the reorganization plan, the provisions of § 41.65 authorized the Secretary of State to designate exchange visitor programs and, through publication of a public notice in the Federal Register, an exchange visitor skills list. That skills list contained a list of fields of specialized knowledge or skills and the names of countries in need of such qualified specialized knowledge or skills. To establish eligibility for exchange visitor status, a properly executed Form DSP-66 (Certificate of Eligibility for Exchange Visitor Status), revised and redesignated as Form IAP-66 by the International Communication Agency, was used by the Department. The jurisdiction for establishment of eligibility and for the publication of the skills list in the Federal Register was specifically transferred to the Director of the International Communication Agency under the 1977 reorganization. Compliance with section 553 of Title 5 of the United States Code relating to Notice of Proposed Rulemaking and delayed effective date is unnecessary in this instance because the amendments conform with agency management and organization.

§ 41.65 [Amended]

1. In § 41.65(a)(1) the words "Department" and "DSP-66 (Certificate of Eligibility for Exchange Visitor Status;" are replaced by the words "International Communication Agency" and "IAP-66 (Certificate of Eligibility for Exchange Visitor (J-1) Status);" respectively.

§ 41.65 [Amended]

2. In § 41.65(b)(1)(ii) the words "Secretary of State" are replaced by the words "Director of the International Communication Agency".

§ 41.65 [Amended]

3. In the fourth line of § 41.65(b)(3), the reference to "§ 63.1 of this chapter" is changed to read "§ 514.1 of Chapter V".

(Sec. 104, 66 Stat. 174; (8 U.S.C. 1104, 1182(e), 1258); Reorganization Plan No. 2 of 1977; Executive Order 12048 of March 27, 1978)

Dated: November 13, 1980.

Diego C. Asencio,

Assistant Secretary for Consular Affairs.

[FR Doc. 80-38362 Filed 12-10-80; 8:45 am]

BILLING CODE 4710-06-M

DEPARTMENT OF THE INTERIOR

Bureau of Indian Affairs

25 CFR Part 233

San Carlos Indian Irrigation Project, Arizona; Revision of Power Rates

AGENCY: Bureau of Indian Affairs, Interior.

ACTION: Final rule.

SUMMARY: This action revises one of the three rate schedules which establish charges for electric power and energy provided by the San Carlos Indian Irrigation Project (Project). An analysis of the financial condition of the Power Division indicates that revenues derived from the sale of electrical energy are not sufficient to defray all expenses related to the operation of the Project's power system. The intended effect of this action is to adjust the general rate schedule (§ 233.52 Rate Schedule No. 2—General Rate) to more accurately reflect the apportioned cost of service and thereby increase operating revenues.

EFFECTIVE DATE: January 1, 1981.

FOR FURTHER INFORMATION CONTACT: Project Engineer, San Carlos Indian Irrigation Project, P.O. Box 456, Coolidge, Arizona 85228, Telephone (602) 723-5439.

SUPPLEMENTARY INFORMATION: Bureau policies and federal statutes which govern the conduct of the Project require that power rates be adjusted as appropriate to provide sufficient funds to meet the financial obligations of the Project. Present operating revenues of the Power Division are not sufficient to cover present operating expenses. To eliminate the deficit resulting therefrom and to allow for increased costs of labor, materials and equipment, the Project must, in addition to other measures, adjust power rates as appropriate to generate the required additional revenues. On October 1, 1980, the Bureau of Indian Affairs published in 45 FR 64960 a proposed rule to revise Part 233 to accomplish this objective. A total of two responses on the proposed rule were received within the time allotted for comments. Of these only one was considered substantive; it concerned the magnitude of rate increases in the past four years and the use of power revenues for the operation of Project irrigation pumps.

Prior to 1975, the Project retailed primarily low cost federal hydroelectric power. During 1975, a substantial portion of this hydroelectric power was withdrawn by the Secretary of the Interior; as a result the Project must now rely on steam power generated by public utilities. During the past five years the Project has been trying to start repaying the capital investment in the power system, as well as trying to keep abreast of rate increases imposed by the public utilities that provide steam power generated with expensive fossil fuel, to say the least of additional expenses due to increased costs of labor, materials and equipment. With respect to the second comment, past practice has been for the Project to furnish power for irrigation pumping as a part of the cost of operation and maintenance of the power system; consequently, power customers of the Project have been defraying this expense. This has been a subject of controversy since about 1935. A review of the Project's operating

policies has just been completed and the Bureau is now in the process of initiating changes which will provide for equitable distribution of costs related to the operation of Project irrigation pumps. It will require considerable time to make the necessary changes. Based on the foregoing the Bureau must effect a rate adjustment as proposed.

The authority to issue rules and regulations is vested in the Secretary of the Interior by 5 U.S.C. 301 and Sections 463 and 465 of the Revised Statutes (25 U.S.C. 2 and 9). This final rule is issued under authority delegated to the Commissioner of Indian Affairs by the Secretary of the Interior in 230 DM 2 and redelegated by the Commissioner to the Area Directors in 10 BIAM 3.

The Department of the Interior has determined that this document is not a significant rule and does not require a regulatory analysis under Executive Order 12044 and 43 CFR Part 14.

The primary author of this document is: Ralph Esquerra, San Carlos Irrigation Project, P.O. Box 456, Coolidge, Arizona, Telephone (602) 723-5439.

Part 233, Subchapter U, Chapter 1 of Title 25 of the Code of Federal Regulations is amended as follows:

Section 233.52 is amended by revising paragraph (b) to read as follows:

§ 233.52 Rate schedule No. 2—general rate.

* * * * *

(b) *Monthly rate.* (1) $8.00 minimum which includes the first 50 kilowatt-hours;

(2) 9.6 cents per kilowatt-hour for the next 350 kilowatt-hours;

(3) 5.7 cents per kilowatt-hour for the next 600 kilowatt-hours;

(4) 4.0 cents per kilowatt-hour for the next 9,000 kilowatt-hours;

(5) When use is 10,000 kilowatt-hours or more: First 10,000 kilowatt-hours $435.80;

(6) Additional kilowatt-hours at 3.9 cents per kilowatt-hour, less a credit of .8 cents per kilowatt-hour for each kilowatt-hour above 200 times the billing demand (50 KW minimum).

* * * * *

It is hereby certified that the economic and inflationary impacts of this final regulation have been carefully evaluated in accordance with Executive Order 11821.

George W. Knoll,

Acting Assistant Area Director.

[FR Doc. 80-38449 Filed 12-10-80; 8:45 am]

BILLING CODE 4310-02-M

DEPARTMENT OF THE TREASURY

Internal Revenue Service

26 CFR Part 150

[T.D. 7742]

Windfall Profit Tax; Definition of "Producer"

AGENCY: Internal Revenue Service, Treasury.

ACTION: Amendment of temporary regulations.

SUMMARY: This document amends temporary excise tax regulations relating to the windfall profit tax on domestic crude oil imposed by title I of the Crude Oil Windfall Profit Tax Act of 1980. The new temporary regulations clarify the definition of the term "producer". In addition, the text contained in the temporary regulations set forth in this document serves as the text of the proposed regulations cross-referenced in the notice of proposed rulemaking in the Proposed Rules section of this issue of the Federal Register.

DATES: These temporary regulations are effective with respect to oil removed after February 29, 1980.

FOR FURTHER INFORMATION CONTACT: David B. Cubeta of the Legislation and Regulations Division, Office of the Chief Counsel, Internal Revenue Service, 1111 Constitution Avenue, NW., Washington, DC 20224 (Attention: CC:LR:T) (202-566-3297).

SUPPLEMENTARY INFORMATION:

Background

On April 4, 1980, the Federal Register published temporary regulations (45 FR 23384) under sections 4986, 4987, 4988, 4989, 4991, 4992, 4993, 4994, 4995, 4996, 4997, 6050C, 6076, and 6402 of the Internal Revenue Code of 1954. The temporary regulations were required to implement various sections of the Crude Oil Windfall Profit Tax Act of 1980. Certain amendments to the temporary regulations have since been published. This document contains amendments to § 150.4996-1(b) of those temporary regulations (relating to the definition of "producer").

Explanation of Provisions

The producer of taxable crude oil is liable for the windfall profit tax. Section 4996 provides the general rule that the term "producer" means the holder of the economic interest with respect to the crude oil. Numerous commentators on the proposed windfall profit tax regulations published on April 4, 1980 requested further guidance in applying that rule. Of particular concern to many commentators was the treatment of production payments and net profits interests.

These regulations amend § 150.4996-1(b) to clarify that the term "producer" means the holder of the economic interest, and the term "economic interest" has the same meaning as it has for income tax purposes. Therefore, the windfall profit tax treatment of a production payment is to be determined by reference to section 636.

With respect to net profits interests, several commentators suggested that the regulations provide that gross production from the property is to be allocated between the parties to the net profits contract in the same percentage as their respective shares of net profits. The regulations do not adopt this approach because it is not consistent with the income tax treatment of net profits interests. However, these regulations do contain a special rule providing that in determining each producer's share of production (for windfall profit tax purposes only) the net profits are to be computed without regard to any reduction in profits due to the windfall profit tax.

Waiver of Procedural Requirements of Treasury Directive

The expeditious adoption of the provisions contained in this document is necessary because of the need for immediate guidance to taxpayers liable for the windfall profit tax on domestic crude oil. For this reason, William E. Williams, Acting Commissioner of Internal Revenue, has determined that the provisions of paragraphs 8 through 14 of the Treasury Department directive implementing Executive Order 12044 must be waived.

Drafting Information

The principal author of these regulations is David B. Cubeta of the Legislation and Regulations Division of the Office of Chief Counsel, Internal Revenue Service. However, personnel from other offices of the Internal Revenue Service and Treasury Department participated in developing the regulations, both on matters of substance and style.

Adoption of amendments to the regulations

Accordingly, Part 150, Temporary Excise Tax Regulations under the Crude Oil Windfall Profit Tax Act of 1980, is amended by revising paragraph (b) of § 150.4996-1 to read as follows:

PART 150—TEMPORARY EXCISE TAX REGULATIONS UNDER THE CRUDE OIL WINDFALL PROFIT TAX ACT OF 1980

§ 150.4996-1 Definitions.

For purposes of this part and chapter 45 of the Code—

* * * * *

(b) *Producer.* (1) Except as otherwise provided in this paragraph, the term "producer" means the holder of the economic interest with respect to the crude oil in place in the ground. For this purpose, the term "economic interest" has the same meaning as it has for purposes of subtitle A of the Code. For example, the owner of a production payment shall be treated as the producer only to the extent that the production payment is treated as an economic interest by section 636 (taking into account the effective date of that section).

(2) In the case of a partnership, the partnership's economic interest in the oil shall be allocated among the partners on the basis of each partner's proportionate share of the partnership's income from the crude oil, and the partner to whom the oil is allocated shall be treated as the producer of the oil. In the case of a trust or estate, the entity is the producer rather than the beneficiaries.

(3) In determining the shares of production attributable to a producer who holds a net profits interest and a producer whose economic interest is subject to a net profits interest, paragraph (b)(1) of this section shall apply except that the net profits shall be computed without regard to any reduction in profits attributable to the tax imposed by chapter 45. The rule stated in the preceding sentence may be illustrated by the following example:

Example. Assume that A holds the entire working interest in a property subject to a 10 percent net profits interest held by B. The contract provides that before the division of net profits A is to recover from oil production all costs, including taxes. The property produces 30 barrels of taxable crude oil sold at $40 per barrel. Expenses total $400 (exclusive of windfall profit tax). Regardless of whether under the contract the term "taxes" includes the windfall profit tax, B is taxable as the producer of 2 barrels, the number of barrels attributable to 10 percent of the net profit computed without regard to the windfall profit tax ($1,200 gross proceeds less expenses of $400 equals $800 net profit; 10 percent equals $80 or 2 barrels at $40 per barrel). A is the producer of 28 barrels.

* * * * *

There is need for the immediate guidance provided by the provisions contained in this Treasury decision. For this reason, it is found impracticable to issue this Treasury decision with notice and public procedure under subsection (b) of section 553 of title 5 of the United States Code or subject to the effective date limitation of subsection (d) of that section.

(Sections 4997(b) and 7805 of title 26 of the United States Code (94 Stat. 250 and 68A Stat. 917; 26 U.S.C. 4997(b) and 7805))

William E. Williams,

Acting Commissioner of Internal Revenue.

Approved: December 5, 1980.

Donald C. Lubick,

Assistant Secretary of the Treasury.

[FR Doc. 80-38385 Filed 12-8-80; 2:23 pm]

BILLING CODE 4830-01-M

DEPARTMENT OF THE INTERIOR

Geological Survey

30 CFR Part 250

Oil, Gas, and Sulphur Operations in the Outer Continental Shelf, Lease Royalty Requirements

AGENCY: U.S. Geological Survey, Interior.

ACTION: Final rule.

SUMMARY: This rule incorporates modification of 30 CFR 250.65 and 30 CFR 250.66 required to conform to the Department of the Interior's current policy as it relates to the payment of royalty on oil and gas that is unavoidably leaked, spilled, vented, flared, or lost in lease or unit operations. A proposed rule along with a companion Notice to Lessees and Operators (NTL) was published in the Federal Register on August 13, 1980, for public comment. The only changes proposed to be made to the existing regulations were those intended to indicate that royalty was no longer required on all oil and gas removed from a reservoir.

DATE: This rule shall become effective January 12, 1981.

FOR FURTHER INFORMATION CONTACT: Ronald Prehoda, Branch of Offshore Oil and Gas Operations, Conservation Division, U.S. Geological Survey, Mail Stop 640, Reston, Virginia 22092; Telephone: 703/860-7571.

Principal Authors

Larry Hoese, Office of the Solicitor, Department of the Interior, Washington, D.C. 20240; Ronald Prehoda, Conservation Division, U.S. Geological Survey, Mail Stop 640, Reston, Virginia 22092.

Discussion of Comments

Summary of Comments Received

Responses were received from 11 commenters representing the views of some 22 companies and individuals. Only three respondents commented on the proposed changes to the regulations with the balance commenting on the companion Notice to Lessees and Operators (NTL).

One commenter, without further elaboration, stated that they felt the proposed regulations would not fully satisfy within themselves the intent of the wording of the royalty provisions in all existing leases. The other two commenters took exception to the wording "when conditions warrant," "actual monthly production," and "products remaining on the leased area," and suggested that each term should be defined in the regulation. Also, one of the commenters suggested that the companion NTL be incorporated into the regulations by reference. Another commenter suggested that all oil or gas that is to be excluded from royalty payment be defined in the regulation. Finally, one commenter expressed the fear that the wording "when conditions warrent" could mean that whenever he deems it appropriate, the Director could revert to the Department of Interior's former position which is now being challanged in various suits, i.e., that royalties are due on oil and gas unavoidably leaked, spilled, vented, flared, or used in lease or unit operations.

Disposition of Comments Received

The intent of our proposed changes to 30 CFR 250.65 and to 30 CFR 250.66 was merely to remove any inference in these regulations that royalty was due on all oil and gas removed from a reservoir. Once this was done, then preparation of an appropriate NTL that would specifically provide for royalty exemption could commence. We feel that our intent was met by the changes. It should be noted that the words "when conditions warrant," "actual monthly production," and "products remaining on the leased area," are not new requirements, since they are part of the current and previous versions of the regulations. These phrases are included in the regulations to cover those instances where products, such as natural gas liquids, may be stored on the lease awaiting sale. In these cases royalty would be levied on the liquids on a production basis in order that the USGS does not become involved in lessee inventory arrangements. This is current practice and we do not believe it

is necessary to explain such practice in the regulations.

We also believe that the concern expressed by the commenter that the Director may use the wording "when conditions warrant" to revert to the Department of Interior's former position regarding royalty payments vis-a-vis oil and gas unavoidably leaked, spilled, vented, flared, etc., is unfounded. We have previously explained the intent of "when conditions warrant" in the prior discussion. Moreover, in the event the Director makes any ruling in any matter that a party feels is against their best interest, that party can exercise the appeal rights which are currently available.

Finally, as it relates to the comments that suggest that (1) the regulations should include the companion NTL by reference and; (2) the regulations should list all oil or gas that is excluded from royalty payment, we do not agree that these should be included. As stated previously, our only purpose in changing the regulations was to delete the language that currently indicates that royalty is due on all oil and gas removed from the reservoir. Our proposed changes, in our view, accomplish this. The companion NTL is the document that implements the regulations and the necessary detail relating to royalty exclusions are properly included there, and we see no reason to include such details in the regulation. We do, however, believe that the regulations should describe the oil and gas that are subject to royalty payment and to that extent we have added language to 30 CFR 250.65 and 30 CFR 250.66.

Environmental Impact and Regulatory Analysis

The Department of the Interior has determined that the revision to 30 CFR 250.65 and 30 CFR 250.66 is not a Federal action significantly affecting the quality of the human environment and, therefore, preparation of an Environmental Impact Statement (EIS) is not required. The Department has also determined that this final rule is not a significant action and does not require the preparation of a regulatory analysis under Executive Order 12044.

Dated: December 8, 1980.

Joan M. Davenport,

Assistant Secretary—Energy and Minerals.

The provisions of 30 CFR 250.65(b) and 30 CFR 250.66 are changed to read as follows:

§ 250.65 Royalty on oil.

* * * * *

(b) Royalty is due on all oil which is (1) produced from a reservoir and sold by the lessee; (2) produced from a reservoir and used by the lessee for purposes of production from and operations upon the lease or unit area, or operations outside the lease or unit area, unless otherwise provided for in the lease; and (3) produced from a reservoir but lost, when such loss either was not specifically authorized or was avoidable. The royalty on oil may be based on production as products are moved from the lease. When conditions warrant, the Director may require royalty to be based on actual monthly production, including products remaining on the leased area. Evidence of all shipments shall be filed with the Director within 5 days, or longer periods when approved by the Director, after the oil has been shipped by pipeline or by other means of transportation. That evidence shall be signed by representatives of the lessee and by representatives of the purchaser or the transporter who witnessed the measurement reported. That evidence shall also note determinations of the gravity and temperature of the oil and the percentage of impurities contained in the oil.

§ 250.66 Royalty on unprocessed gas.

Royalty is due on all gas which is (a) produced from a reservoir and sold by the lessee; (b) produced from a reservoir and used by the lessee for purposes of production from and operations upon the lease or unit area, or operations outside the lease or unit area, unless otherwise provided for in the lease; (c) produced from a reservoir but lost (vented or flared), when such loss either was not specifically authorized or was avoidable. Royalty is not due on gas or liquids produced from and reinjected to a reservoir, either within or outside the same lease or unit, until such time as they are finally produced from a reservoir. When gas is sold without processing for the recovery of constituent products the royalty thereon shall be a percentage, established by the terms of the lease, of the value or amount of the gas and constituent products. The value of wet gas and entrained liquids may be established by adjusting the value of the gas less entrained liquids using a British Thermal Unit (BTU) or other appropriate adjustment factor. The value shall not be less than that which would accrue by computing royalty in accordance with §§ 250.67(a) through (d) of this Part.

[FR Doc. 80-38451 Filed 12-10-80; 8:45 am]

BILLING CODE 4310-31-M

POSTAL SERVICE

39 CFR Part 111

Third-Class Carrier Route Presort

Correction

In FR Doc. 80-37353 appearing on page 79804, in the issue of Tuesday, December 2, 1980, make the following corrections:

On page 79806, third column, the wrong formats where set out in section *651.3*b.(2). Section 651.3b.(2) should have appeared as set forth below:

662.3 Carrier Route Presort Rate

* * * * *

b. * * *

(2) One of the following formats must be used:

BILLING CODE 1505-01-M

CAR-RT Sort Resident 1300 Waterford Dr. District Heights, MD 20028	Carrier Route Presort Resident 1300 Waterford Dr. District Heights, MD 20028
CAR-RT SORT Postal Customer	Carrier Route Presort Postal Customer
CAR-RT SORT ** CR 22 Resident 1300 Waterford Drive District Heights, MD 20028	Carrier Route Presort ** CR 22 Resident 1300 Waterford Drive District Heights, MD 20028
CAR-RT SORT ** CR 22 Resident 1300 Waterford Drive District Heights, MD 20028	Carrier Route Presort ** CR 22 Resident 1300 Waterford Drive District Heights, MD 20028
CAR-RT Sort **LS 0101 24632176190 BC 789 Resident P. O. Box 961 New York, NY 10001	Carrier Route Presort ** CR 22 Resident 1300 Waterford Drive District Heights, MD 20028
CAR-RT SORT **LS 0101 24632176190 BC 789 Resident P. O. Box 961 New York, NY 10001	Carrier Route Presort **CR 22 Resident 1300 Waterford Drive District Heights, MD 20028

BILLING CODE 1505-01-C

On page 79807, in the center column, in section *667.3*b.(5) the wrong formats were set out. Section 667.3b.(5) should have appeared as set forth below:

667.3 Preparation Requirements for Carrier Route Presort Level Rate

* * * * *

b. * * *

(5) The carrier route information must be preceded by at least two asterisks (**), or other distinctive non-alphabetic or non-numeric characters. The following are examples of address formats:

BILLING CODE 1505-01-M

**Carrier Route 22
Resident
1300 Waterford Drive
District Heights, MD 20028

**CR 22
Resident
1300 Waterford Drive
District Heights, MD 20028

Resident **CR 22
1300 Waterford Drive
District Heights, MD 20028

** Rural Route 05
Postal Customer
1602 Country Lane
Burke, VA 22015

Postal Customer **RR 1505

CAR-RT SORT ** CR 22

Resident
1300 Waterford Drive
District Heights, MD 20028

BILLING CODE 1505-01-C

ENVIRONMENTAL PROTECTION AGENCY

40 CFR Part 35

[WH-FRL 1697-3]

State and Local Assistance; Grants for Construction of Wastewater Treatment Works

AGENCY: Environmental Protection Agency.

ACTION: Deviation to rule.

SUMMARY: Under the authority of 40 CFR 30.1000, the Environmental Protection Agency (EPA) has issued a class deviation from several provisions of EPA's construction grant regulations.

On October 21, 1980, President Carter signed Pub. L. 96-483 which amended several provisions of the Clean Water Act (CWA). EPA is implementing the technical amendments of that law by class deviation. Those amendments—

- Repeal the Industrial Cost Recovery provisions of the law;
- Extend the reallotment date for FY 1979 funds to September 30, 1981;
- Permit States to reserve up to 2 percent of their annual allotment based on the amount *authorized* to be appropriated for State Management Assistance; and
- Increase the limits for Step 2+3 grants to $4 million ($5 million in states with high construction costs).

The class deviation is published with this document.

DATE: The class deviation became effective when it was signed.

FOR FURTHER INFORMATION CONTACT: Mr. Harvey Pippen, Jr., Director, Grants Administration Division (PM-216), Environmental Protection Agency, 401 M St., S.W., Washington, D.C. 20460 (202) 755-0850.

C. William Carter,

Acting Assistant Administrator for Planning and Management (PM-208).

Eckardt C. Beck,

Assistant Administrator for Water and Waste Management (WH-556).

United States Environmental Protection Agency

Date: December 5, 1980.

Subject Class Deviation from 40 CFR 35.909(b)(2), 35.910-10, 35.915-1(a), 35.920-3(b)(8)(ii), 35.925-11, 35.928 through 35.928-4 and 35.935-15

From: Harvey Pippen, Jr., Director Grants Administration Division (PM-216)

To: Regional Administrators

On October 21, 1980, President Carter signed P.L. 96-483 which amended several provisions of the Clean Water Act (CWA). Some of those amendments are very technical and we believe they should be implemented immediately. The technical amendments—

- Repeal industrial cost recovery;
- Extend the reallotment date for fiscal year 1979 funds to September 30, 1981;
- Permit States to reserve up to 2 percent of each annual allotment based on the amount *authorized* to be appropriated for State Management Assistance; and
- Increase the limits for Step 2+3 grants to $4 million ($5 million in States with high construction costs).

The other amendments and some aspects of the industrial cost recovery amendments will require detailed analysis before we can fully implement them. EPA is forming work groups to develop implementation alternatives and regulation revisions.

To quickly implement the technical amendments I am approving the following class deviations—

40 CFR 35.909(b)(2)—Step 2+3

I am approving a deviation from § 35.909(b)(2) to permit award of Step 2+3 grants for treatment works with an estimated total Step 3 construction cost of—

1. $4 million or less; or,
2. $5 million or less, in States with unusually high construction cost (as identified by the Assistant Administrator for Water and Waste Management).

To qualify for Step 2+3 grants, projects meeting these criteria must also meet the other limitations of § 35.909(b).

If Step 2 grants for projects meeting these criteria have already been awarded, they may be amended to add the Step 3 portion.

40 CFR 35.910-10—Extension of the FY 1979 Appropriation Reallotment Date

I am approving a deviation to extend to September 30, 1981, the date by which FY 1979 funds must be obligated. After September 30, 1981, unobligated FY 1979 balances will be realloted under Section 205(d) of the CWA and § 35.910-2(b) of the regulations.

40 CFR 35.915-1(a)—Reserve for State Management Assistance Grants

I am approving a deviation from 35.915-1(a) to permit each State to reserve up to 2 percent of its annual allotment based on the amount *authorized* to be appropriated or $400,000, whichever is greater, for State Management Assistance grants under 40 CFR 35, Subpart F. We have determined that this provision may be applied to all allotments which are available for obligation, i.e., FY 1979, 1980, and FY 1981.

If a State elects to increase its reserve for any year and if the increase will affect the funding of projects on an accepted priority list, the State must revise its priority list in accordance with § 35.915(f). State grant increases from increased reserves are available in accordance with the normal procedures under the State Management Assistance grants regulations (40 CFR 35, Subpart F).

40 CFR 35.920-3(b)(8)(ii) 35.925-11, 35.928 through 35.928-4 and 35.935-15—Repeal of Industrial Cost Recovery

I am approving a deviation eliminating all industrial cost recovery (ICR) requirements of the construction grant regulations back to December 27, 1977. Since the repeal of ICR is retroactive only to December 27, 1977, ICR payments due for use of treatment works after March 1, 1973, and before December 27, 1977, must be paid. Grantees shall use such payments in accordance with the regulations in effect at that time. If grantees have collected ICR payments for use of treatment works after December 27, 1977, they should determine what action is appropriate with respect to those funds. *No* funds from ICR payments to grantees for treatment works use after December 27, 1977, should be paid to EPA.

Many current projects include activities related to development of ICR systems. Such activities conducted after December 31, 1980, will not be eligible for Federal grant assistance. Therefore, grantees should terminate the ICR activities as soon as possible. However, EPA will fund development of financial management systems based on user charges designed to assure fiscal integrity of the grantee's entire wastewater treatment systems. The Office of Water Program Operations will distribute sample letters for Regional/State use in notifying grantees of the actions they should take to terminate ICR system development.

Concur:

Dated: December 5, 1980.

C. William Carter,

Acting Assistant Administrator for Planning and Management (PM-208)

Concur:

Dated: November 24, 1980.

Eckardt C. Beck,

Assistant Administrator for Water and Waste Management (WH-556).

[FR Doc. 80-38406 Filed 12-10-80; 8:45 am]

BILLING CODE 6560-29-M

DEPARTMENT OF COMMERCE

Maritime Administration

46 CFR Part 310

Admission and Training of Midshipmen at the United States Merchant Marine Academy; Pay Increase

AGENCY: Maritime Administration, Department of Commerce.

ACTION: Final rule.

SUMMARY: The Maritime Administration amends its regulations relating to merchant marine training to increase the pay that midshipmen of the United States Merchant Marine Academy receive while assigned to merchant vessels for sea year training. The purpose of this amendment is to implement the Maritime Administration policy that midshipmen shall receive the

same rate of pay from their steamship company employers for the sea year training as cadets receive at the other Federal academies.

EFFECTIVE DATE: January 15, 1981.

FOR FURTHER INFORMATION CONTACT: Mr. Erich J. Bernhardt, Academies Program Officer, Maritime Administration, Office of Maritime Labor and Training, Main Commerce Building, Washington, D.C. 20230, (202) 377-2095.

SUPPLEMENTARY INFORMATION: Part 310 of Title 46 of the Code of Federal Regulations is hereby amended. This amendment increases the pay that midshipmen of the United States Merchant Marine Academy receive while assigned to merchant vessels for sea year training.

The rate of pay received by midshipmen while assigned to subsidized merchant vessels is a matter of public contract with the owners of such vessels. This amendment has been determined not to be a significant regulation within the scope of E.O. 12044, "Improving Government Regulations" (43 FR 12661), and implementing procedures of the Department of Commerce and the Maritime Administration (44 FR 2082), as amended. Therefore, this amendment to the Merchant Marine Training regulations is adopted without notice of proposed rulemaking.

Part 310 of Title 46 of the Code of Federal Regulations is amended by revising paragraph (c) of § 310.58 to read as follows:

§ 310.58 Training on subsidized vessels.

* * * * *

(c) *Pay*—While attached to merchant vessels, midshipmen shall receive pay from their steamship company employers at the rate of $419.40 per month. Midshipmen, while assigned to ships, will be furnished quarters and subsistence by the steamship company employer. While aboard ship, they shall be berthed in rooms with other midshipmen in that part of the vessel designated for licensed officers or first-class passenger quarters and shall mess with the licensed officers. In addition, the steamship company employers shall pay the midshipmen such subsistence and room allowance in port, transportation allowances and other bonuses or allowances as are paid to the licensed officers of the vessel to which midshipmen are attached.

* * * * *

(Section 204(b), Merchant Marine Act, 1936, as amended (49 Stat. 1987, 46 U.S.C. 1114). Reorganization Plans No. 21 of 1950 (64 Stat. 1273) and No. 7 of 1961 (75 Stat. 840), as amended by Public Law 91-469 (84 Stat. 1036); Department of Commerce, Organization Order 10-8 (38 FR 19707, July 23, 1973))

(Catalog of Federal Domestic Assistance Program No. 11-507 U.S. Merchant Marine Academy (Kings Point))

Dated: December 5, 1980.

By Order of the Assistant Secretary of Commerce for Maritime Affairs.

Robert J. Patton, Jr.,

Secretary.

[FR Doc. 80-38344 Filed 12-10-80; 8:45 am]

BILLING CODE 3510-15-M

FEDERAL COMMUNICATIONS COMMISSION

47 CFR Part 15

[RM-3654; FCC 80-671]

Radio Frequency Devices; Establishment of Absolute Maximum Level of Permissible Harmonic Emissions for Certain Field Disturbance Sensors

AGENCY: Federal Communications Commission.

ACTION: Final rule (Order).

SUMMARY: The Commission has amended its rules, in response to a petition for rulemaking, to require an absolute limit on harmonic emissions from field disturbance sensors operating at frequencies of 915 MHz, 2,450 MHz, and 5,800 MHz. A field disturbance sensor is a device that uses radio energy to detect motion of objects or persons. The relaxation of the limit should result in lower manufacturing costs for field disturbance sensors and, therefore, should result in cost savings to users.

EFFECTIVE DATE: November 26, 1980.

ADDRESS: Federal Communications Commission, Washington, D.C. 20554.

FOR FURTHER INFORMATION CONTACT: Mr. Thomas N. Cokenias, Office of Science and Technology, (301) 725-1585.

SUPPLEMENTARY INFORMATION:

In the Matter of Amendment of § 15.309(b) of the Commission's rules and regulations to establish an absolute maximum level of permissible harmonic emissions for certain field disturbance sensors; *Memorandum opinion and order* (proceeding terminated).

Adopted: November 18, 1980.

Released: November 26, 1980.

By the Commission: Commissioner Fogarty absent.

1. This proceeding was initiated in response to a petition for rulemaking filed by RCA Corporation (RCA) on April 22, 1980. The petition for rulemaking was placed on public notice on May 7, 1980. No comments were received in response to this petition within the 30-day period after the date of public notice.

2. The petition is to amend Section 15.309(b) of the Rules to establish an absolute value of 158 uV/m at 30 meters for the maximum permissible level of harmonic emissions of field disturbance sensors operating in the frequency bands centered at 915, 2,450, and 5,800 MHz. This amendment would apply only to harmonic emissions and would establish this absolute value in lieu of the present requirement that such harmonic emissions be attenuated at least 50 dB below the level of the fundamental emission, but not below 15 uV/m at 30 meters. The limits for spurious emissions other than harmonics are not herein changed and are not affected by the RCA petition.

3. RCA has incorporated a 915 MHz field disturbance sensor in the design of its SelectaVision Videodisc System. This video disc playback system includes a vinyl disc that stores video, sound, and synchronization signals, a 915 MHz field disturbance sensor which is used to extract the stored information from the disc, and convert it to an electrical signal, and a video interface device (modulator) which allows the user to use an ordinary television set to view the output signal. The field disturbance sensor appears to utilize substantially less than the maximum field strength allowable on the fundamental emission.

4. The existing paragraphs (a), (b) and (c) of § 15.309, which are pertinent to the matters raised in the RCA petition read as follows:

§ 15.309 Emission limitations.

(a) For a field disturbance sensor operating on any frequency listed in § 15.307, the field strength of emissions on the fundamental shall be limited in accordance with the following:

Frequency (MHz) and Field Strength

915, 2,450, 5,800—50,000 uV/m at 30 meters
10,525, 24,125—250,000 uV/m at 30 meters

(b) Spurious emissions from sensors operating in bands centered on 915, 2,450 and 5,800 MHz, including emissions on harmonics shall be suppressed at least 50 dB below the level of the fundamental; however, suppression below 15 microvolts per meter at 30 meters is not required.

(c) Harmonic emissions from sensors operating in bands centered on 10,525 and 24,125 MHz shall not exceed a level of 2,500 microvolts per meter at 30 meters. Spurious emissions except harmonics shall be suppressed at least 15 dB below the level of the fundamental; however, suppression below 15 microvolts per meter at 30 meters is not required.

5. RCA states that under the present rules a field disturbance sensor operating at the maximum field strength (50,000 uV/m) must limit its spurious emissions to a certain level (158 uV/m). RCA further points out that such device if operating at a lower field strength at the fundamental frequency must decrease the spurious emission level.[1] This inconsistency, as RCA notes, has no apparent justification but has the effect of penalizing manufacturers and users of field disturbance sensors operating at less than the maximum permissible field strength on the fundamental. RCA advances additional arguments, which are summarized below:

(a) Other higher power field disturbance sensors are permitted to operate with up to 158 uV/m at 30 meters at the harmonic frequencies, with no reported cases of interference to radio services.

(b) Because no increase in the maximum permissible harmonic emission limit is proposed, it appears there would be no objection to establishing a fixed 158 uV/m at 30 meters level for harmonic emissions.

(c) An absolute harmonic emission limit of 158 uV/m at 30 meters would lead to reduced manufacturing costs, simplify device measurement procedures, and enhance production controls needed to ensure performance compliance, with the result that appreciable savings would accrue to purchasers of devices designed to meet the uniform harmonic emission level.

(d) A fixed maximum permissible level of 158 uV/m at 30 meters for harmonic emissions of 915, 2,450 and 5,800 MHz field disturbance sensors would codify the current maximum harmonic limit to apply to all such devices; and would, thereby, simplify the Commission's rule compliance enforcement efforts.

In conclusion, RCA maintains that a single limit on harmonic emissions should apply to all field disturbance sensors regardless of the field strength on the fundamental frequency.

6. We agree that a relaxation of the harmonic attenuation limit of § 15.309(b) as requested by the petitioner should result in lower manufacturing costs and, therefore, in cost savings to users. We also take note of RCA's point concerning the inconsistency in treatment, by the existing rule, of the absolute levels of harmonic emissions from field disturbance sensors having the maximum permissible, and lower, values of fundamental field strength. It does, indeed, appear illogical to place the more restrictive absolute harmonic emission limitation on a device whose fundamental emission is lower than the maximum allowed. This situation apparently has resulted from the fact that use of field disturbance sensors with less than the maximum permissible fundamental field strength was not anticipated at the time of adoption of the field disturbance sensor rules in 1971. Finally, we would point out that we have not been able to locate in our records any instance of reported interference to radio services from harmonic emission of microwave field disturbance sensors.

7. As a matter of information, we would point out that the present requirements of § 15.309(c) have resulted from a 1973 action [2] which parallels the instant change requested for § 15.309(b) by RCA.

8. In consideration of the foregoing, we find that grant of the instant petition by amendment of the rules as contained in the attached Appendix is in the public interest. Since this is a relaxation of an existing rule, the amendment may be made effective without issuance of proposed rulemaking. Authority for these rule amendments is contained in Sections 4(i), 302, 303(g) and 303(r) of the Communications Act of 1934, as amended.

9. As indicated, the subject rules will be amended without issuance of a Notice of Proposed Rulemaking. No comments were filed in response to the petition and issuance of a NPRM would only delay new rules which will ease restrictions on the operation of radiation devices which are used as field disturbance sensors. In addition, amendment of the rules as ordered herein will bring § 15.309(b) into uniformity with § 15.309(c) which was amended in 1973. Therefore, pursuant to Section 553(b)(3)(B) of the Administrative Procedure Act we will proceed with the adoption of this Order without the issuance of a NPRM. Additionally, in view of the relief provided pursuant to Section 553(d)(1) the release date of this Order will be the effective date of the amended rules.

10. Accordingly, IT IS ORDERED, that effective November 26, 1980, Part 15 of the Commission's Rules is amended as set forth in the attached Appendix. It is further ordered, that this proceeding is terminated.

Federal Communications Commission.

William J. Tricarico,

Secretary.

Appendix

Section 15.309(b) is revised to read as follows:

§ 15.309 Emission limitations.

* * * * *

(b) Harmonic emissions from sensors operating in the bands centered on 915, 2,450 and 5,800 MHz shall not exceed a level of 160 microvolts per meter at 30 meters. Spurious emissions except harmonics shall be suppressed at least 50 dB below the level of the fundamental; however, suppression below 15 microvolts per meter at 30 meters is not required.

* * * * *

[FR Doc. 80-38442 Filed 12-10-80; 8:45 am]

BILLING CODE 6712-01-M

[1] For example, Section 15.309(b) of the Rules, 47 CFR Sec. 15.309(b), requires the following of field disturbance sensors: Operating at the fundamental field strength of: 50,000 uV/m at 30m, 10,000 uV/m at 30m, 4,750 uV/m at 30m, 1,000 uV/m at 30m; and spurious emissions (including harmonics) cannot exceed: 158 uV/m, 32 uV/m, 15 uV/m 15 uV/m (although 50 dB level is 3 uV/m).

[2] Report and Order in Docket No. 19695, FCC 73-998—released October 2, 1973.

DEPARTMENT OF TRANSPORTATION

Research and Special Programs Administration

49 CFR Parts 106, 107, 171, 172, 173, 174, 175, 176, 177, and 178

[Docket No. HM-56; AMDT. No. 106-3, 107-8, 171-58, 172-63, 173-142, 174-39, 175-18, 176-12, 177-51, 178-64]

Hazardous Materials; Miscellaneous Amendments

AGENCY: Materials Transportation Bureau, Research and Special Programs Administration, Department of Transportation.

ACTION: Final rule.

SUMMARY: The purpose of this amendment to the Hazardous Materials Regulations (HMR) of the Department of Transportation is to change or delete certain incorrect references, to correct certain spelling and editorial errors, and to make minor regulatory changes which will not impose any restrictions on persons affected by these regulations.

EFFECTIVE DATE: December 1, 1980.

FOR FURTHER INFORMATION CONTACT: Thomas G. Allan, Standards Division, Office of Hazardous Materials Regulation, Materials Transportation Bureau, Department of Transportation, 400 Seventh St., S.W., Washington, D.C., 202-426-2075.

SUPPLEMENTARY INFORMATION: Since the consolidation of the Hazardous Materials Regulations into Title 49 of the Code of Federal Regulations and

subsequent amendments thereto, numerous discrepancies have surfaced that continue to appear in the printing of Title 49. These discrepancies include misspelled words, incorrect references, inadvertent omissions of phrases within sections, and punctuation errors. These amendments reflect the appropriate changes, provide clarification of certain confusing portions of the regulations, and incorporate regulatory revisions which do not impose burdens upon any person.

Since these amendments do not impose additional requirements, public notice has not been provided and these amendments are effective without delay. The Materials Transportation Bureau (MTB) has determined that the environmental and economic impact associated with these amendments is minimal.

The following is a brief summary on the changes in each Part of this document:

Part 106

Changes show the current address of MTB offices in Washington, D.C. as referenced in certain sections of this Part.

Part 107

Changes show the current address of MTB offices in Washington, D.C. as referenced in certain sections of this Part. A reference correction is made to the Office shown in § 107.9(d) as OHMO and in § 107.109 paragraph(e) a correction is made to the Part referenced.

Part 171

Corrections made to a misspelled word and to the address of the Dockets Branch.

Part 172

In § 172.407 paragraph (d) is changed to show the current address of MTB offices in Washington, D.C.

Part 173

In § 173.7 paragraph (b) is corrected by citing only those Parts applicable to Subchapter C.

In § 173.31 paragraph (c)(1) the reference to Retest Table 1 is corrected to read "section" instead of "paragraph."

In § 173.33 paragraph (f)(9) is changed by specifying the correct test pressure.

In § 173.34 paragraph (e)(1) is corrected by identifying the appropriate effective date; paragraph (e)(6) is corrected to show the appropriate markings for the month and year; paragraph (e)(13)(v) has corrections in spelling; paragraph (e)(15)(ii) is amended to include sulfur hexafluoride which was inadvertently omitted in the printing of Title 49, revised as of October 1, 1978, and paragraph (e)(16)(iii) has a spelling correction.

In § 173.107 a section reference is corrected.

In § 173.125 paragraphs (a)(5) and (a)(7) are deleted since such packagings are already authorized by paragraph (a)(1).

In § 173.149(a)(1) a section reference is corrected.

In § 173.153 paragraph (a)(1) is corrected by substituting flammable solids for oxidizers, and in paragraph (b)(1) the primary packaging is corrected to reference the inside container rather than the outside container.

In § 173.204 a section reference is corrected.

In § 173.207 a reference is corrected.

In § 173.214 a part reference is corrected and a spelling correction is made.

In § 173.225(b) Note 1 applicable to a previous date is deleted.

In § 173.239a a section reference is corrected.

In § 173.249 section references are corrected.

In § 173.257 a section reference has been corrected in paragraph (a)(6); paragraph (a)(13) is deleted since the packaging is already authorized by paragraph (a)(1), and a section reference has been corrected in paragraph (a)(14).

In § 173.258 paragraph (a)(3) is corrected by specifying the authorized gross weight as 65 pounds since the figures were transposed in printing.

In § 173.274 a footnote has been added regarding the permissive use of certain existing tank cars.

In § 173.289 paragraph (a)(5) is deleted since such packaging is already authorized by paragraph (a)(1).

In § 173.294 a section reference is corrected.

In § 173.300a a part reference is corrected as to the appropriate subchapter.

In § 173.300b a part reference is corrected as to the appropriate subchapter.

In § 173.300c a subchapter reference is corrected as to the appropriate chapter.

In § 173.301 the table contained in paragraph (h) is amended by adding a footnote designation to several classes of previously constructed cylinders, and in paragraph (k) a footnote designation is placed on several classes of previously constructed cylinders.

In § 173.306 several section references are added and corrected.

In § 173.314 paragraph (c), Note 25 following the table is revised to reflect the proper wording.

In § 173.315 a paragraph reference is corrected.

In § 173.328 a section reference is corrected.

In § 173.353 a section reference is corrected.

In § 173.356 paragraph (a)(1) is corrected to reflect proper spelling.

In § 173.377 errors in spelling and capitalization are corrected.

In §§ 173.393a and 173.394 thru 173.396 references to the Atomic Energy Commission are changed to the Nuclear Regulatory Commission wherever they appear.

In § 173.394 a typographical error is corrected.

In § 173.396 a section reference is corrected.

In Subpart I the note immediately following the heading is deleted.

In § 173.1080 an error in punctuation is corrected.

Part 174

In § 174.61 a part reference is corrected.

In §§ 174.600, 174.700 and 174.715 section references are corrected.

Part 175

In § 175.20 a chapter reference is corrected.

In § 175.75 a section reference is corrected.

In § 175.79 a spelling error is corrected.

In § 175.320 a section reference is corrected.

Part 176

In §§ 176.27, 176.30, 176.63, 176.65, 176.69, and 176.76 section references are corrected.

Part 177

In § 177.806 a reference to the U.S. Atomic Energy Commission is changed to the U.S. Department of Energy in order to reflect recent government organizational revisions.

In § 177.834 section references are corrected.

In § 177.835 a title reference is corrected.

In §§ 177.838, 177,842 and 177.843 section references are corrected.

In § 177.861 Note 1 to paragraph (a) is corrected from the present reference of the U.S. Atomic Energy Commission to the U.S. Department of Energy in order to reflect recent government organizational revisions.

Part 178

In § 178.0–2 a section reference is corrected.

In § 178.36–10 a stress formula is corrected.

In § 178.38–10 a stress formula is corrected.

In § 178.39–10 a stress formula is corrected.

A section reference is corrected in the following sections:

178.38–3	178.56–3
178.39–3	178.57–3
178.42–3	178.59–3
178.50–3	178.60–3
178.51–3	178.61–3
178.53–3	178.68–3
178.55–3	

In § 178.83–7 a footnote number is corrected.

In § 178.205–13 a section reference is corrected.

In § 178.225–2 a part reference is corrected.

In § 178.238–3 a section reference is corrected.

In §§ 178.340–2 and 178.340–8 chapter references are corrected.

In Table 1 of Appendix A to Part 178 a footnote number is changed to show the correct reference.

In consideration of the foregoing, Parts 106, 107, 171, 172, 173, 174, 175, 176, 177 and 178 of Title 49 Code of Federal Regulations are amended as follows:

PART 106—RULEMAKING PROCEDURES

§ 106.5 [Amended]

1. In § 106.5 paragraph (a) is amended by changing the address of the MTB to read "400 7th Street, SW, Washington, D.C. 20590" following the word "at" in the twelfth line.

§ 106.9 [Amended]

2. In § 106.9 the introductory text is amended by changing the address of the MTB to read "400 7th Street, SW, Washington, D.C. 20590" following the word "Transportation" in the ninth line.

PART 107—HAZARDOUS MATERIALS PROGRAM PROCEDURES

§ 107.9 [Amended]

3. In § 107.9 the introductory text is amended by changing the address of the MTB to read "400 7th Street, SW, Washington, D.C. 20590" following the word "at" in the second line.

4. In § 107.9 paragraph (d) is amended by changing the letters "OHMO" to "OOE."

§ 107.109 [Amended]

5. In § 107.109 paragraph (e) is amended by changing the reference to "Part 102" to "Part 106."

§ 107.123 [Amended]

6. In § 107.123 paragraph (a) is amended by changing the address of the OHMR to read "400 7th Street, SW, Washington, D.C. 20590" following the word "Regulation" in the tenth line.

PART 171—GENERAL INFORMATION, REGULATIONS, AND DEFINITIONS

§ 171.7 [Amended]

7. In § 171.7 paragraph (b) is amended by changing the address of the Dockets Branch to read "Room 8426, Nassif Building, 400 7th Street, S.W., Washington, D.C. 20590", and paragraph (d)(19) is amended by changing the word "Value" to "Valve" in the fourth line.

PART 172—HAZARDOUS MATERIALS TABLES AND HAZARDOUS MATERIALS COMMUNICATIONS REGULATIONS

§ 172.407 [Amended]

8. In § 172.407 paragraph (d)(3) is amended by changing the address to read "Room 8426, Nassif Building, 400 7th Street, SW, Washington, D.C. 20590" following the word "in" in the second line.

PART 173—SHIPPERS—GENERAL REQUIREMENTS FOR SHIPMENTS AND PACKAGINGS

§ 173.7 [Amended]

9. In § 173.7 paragraph (b) is amended by changing the reference "Parts 100–189" to "Parts 170–189" following the word "in" in the tenth line.

§ 173.31 [Amended]

10. In § 173.31 paragraph (c)(1) is amended by changing the last word of the first sentence from "paragraph" to "section."

§ 173.33 [Amended]

11. In § 173.33 paragraph (f)(9) is amended by changing the number "325" to read "225" in the third line.

§ 173.34 [Amended]

12. In § 173.34 paragraph (e)(1) is amended by substituting the day number "17," in place of the parenthetical statement "(effective date of these amendments)," in the thirteenth line; paragraph (e)(6) is amended by changing the numbers "40–70" to "4–70" in the eighth line; paragraph (e)(13)(v) is amended by changing the words "refection" to "rejection" in the second line, and "porior" to "prior" in the fifth line; paragraph (e)(15)(ii) is amended by adding "sulfur hexafluoride" immediately following the word "oxygen" in the fourth line; and paragraph (e)(16)(iii) is amended by changing the word "scraped" to "scrapped" in the last line.

§ 173.107 [Amended]

13. In § 173.107 paragraph (e) is amended by correcting the section reference "§ 173–101(b)" to read "§ 173.101(b)" in the fifth line.

§ 173.125 [Amended]

14. In § 173.125 paragraphs (a)(5) and (a)(7) are deleted.

§ 173.149 [Amended]

15. In § 173.149 paragraph (a)(1) is amended by deleting the reference to "paragraphs (a) and (b)" at the end of the sentence.

§ 173.153 [Amended]

16. In § 173.153 paragraph (a)(1) is amended by changing the first word "Oxidizers" to "Flammable solids", and paragraph (b)(1) is amended by changing the third word "outside" to "inside."

§ 173.204 [Amended]

17. In § 173.204 paragraph (a)(8) is corrected by changing the reference "§ 174.534" to "§ 174.63".

§ 173.207 [Amended]

18. In § 173.207 paragraph (e) is amended by changing the last word in the first sentence from "subchapter" to "Title" in the twelfth line.

§ 173.214 [Amended]

19. In § 173.214 paragraph (e) is amended by changing the reference "Parts 100–189" to "Parts 170–189" and "title" to "Title" in the sixth and seventh lines, respectively.

§ 173.225 [Amended]

20. In § 173.225 Note 1 following paragraph (b)(2) is deleted.

§ 173.239a [Amended]

21. In § 173.239a paragraph (a)(2) is amended by deleting the reference to "§ 178.247" in the second line.

§ 173.249 [Amended]

22. In § 173.249 paragraph (a)(7) is amended by changing the section references to read "(§§ 178.251, 178.253, 178.255 of this subchapter)" in the second line; paragraph (a)(10) is amended by changing the section reference in the last sentence to read "§ 172.312."

§ 173.257 [Amended]

23. In § 173.257 paragraph (a)(13) is deleted; paragraph (a)(6) is amended by changing the reference "§ 173.401(c)" to "§ 172.312" in the nineteenth line; and paragraph (a)(14) is amended by changing the reference "§ 173.312" to "§ 172.312" in the fifth line.

§ 173.258 [Amended]

24. In § 173.258 paragraph (a)(3) is amended by changing the authorized gross weight from "56" to "65" pounds in the next to last sentence.

§ 173.274 [Amended]

25. In § 173.274 the footnote 1 applicable to paragraph (a)(3) is added to read "The use of existing tanks authorized but new construction not authorized" at the bottom of the page.

§ 173.289 [Amended]

26. In § 173.289 paragraph (a)(5) is deleted.

§ 173.294 [Amended]

27. In § 173.294 paragraph (a)(1) is amended by deleting the reference to § 173.245(a)(6).

§ 173.300a [Amended]

28. In § 173.300a paragraph (f) is amended by adding the words "of this subchapter" immediately following "Part 178" in the fifth line.

§ 173.300b [Amended]

29. In § 173.300b paragraph (a) is amended by adding the words "of this subchapter" immediately following "Part 178" in the sixth line.

§ 173.300c [Amended]

30. In § 173.300c paragraph (a)(4) is amended by adding the words "of this chapter" immediately after "Subchapter C" in the fourth line.

§ 173.301 [Amended]

31. In § 173.301 paragraph (h), table is amended by including the footnote designation "1" with the following containers:

4B240X
9
40
41

31a. In § 173.301 paragraph (k) is amended by including the footnote designation "1" with the following containers:

9
40
41

§ 173.306 [Amended]

32. In § 173.306 paragraph (c)(7) is amended by adding the reference "(§§ 178.33, 178.33a of this subchapter)" immediately following "2Q" in the first line; and paragraph (d)(3)(i) is amended by adding the words "of this subchapter" immediately following "Part 178" in the fourth line.

§ 173.314 [Amended]

33. In § 173.314 paragraph (c) Note 25 following the table is revised to read as follows:

Note 25.—Specification 106A and 110A tanks for these commodities are authorized for transportation by rail freight, highway, and cargo vessel. (See §§ 174.204, 175.200, 176.230 and 177.834(m) of this subchapter for additional requirements.)

§ 173.315 [Amended]

34. In § 173.315 paragraph (1)(2)(iii) is corrected by changing the paragraph reference "(1)(iii)" to "(1)(2)(ii)."

§ 173.328 [Amended]

35. In § 173.328 paragraph (a)(2) is amended by including the words "of this subchapter" immediately following the reference of § 178.42 in the parenthetical.

§ 173.353 [Amended]

36. In § 173.353 paragraph (a)(5) is amended by including the words "of this subchapter" immediately following the reference of § 179.201 in the parenthetical.

§ 173.356 [Amended]

37. In § 173.356 paragraph (a)(1) is amended by joining the prefix "in" with the word "combustible" as it appears in the sixth line.

§ 173.377 [Amended]

38. In § 173.377 paragraph (j) is amended by capitalizing the word "Dry"; and paragraph (5) is amended by correcting the words "bully" to read "fully" and "laods" to read "loads" in the second and third sentences, respectively.

§§ 173.393, 173. 394, 173. 395, 173. 396 [Amended]

39. The designations "U.S. Atomic Energy Commission" and "USAEC" are deleted and replaced by "U.S. Nuclear Regulatory Commission" and "USNRC", respectively each time they appear in the following sections and section heading:

173.393a(a), (a)(1), (a)(2), (a)(3) and (a)(5)
173.394 (b)(3) and (c)(2)
173.395 (b)(2) and (c)(2)
173.396 (b)(4) and (c)(3)

40. In § 173.394 paragraph (c)(1) is corrected by changing the word "to" to the number "10" in the fourth line.

41. In § 173.396 paragraph (g)(3) is amended by changing the section reference of "§ 173.416" to "172.403 of this subchapter" in the first sentence.

Subpart I—[Deleted]

42. In Subpart I, the note which immediately follows the heading is deleted.

§ 173.1080 [Amended]

43. In § 173.1080 paragraph (a) is amended by replacing the period which follows the first word of the paragraph with a comma.

PART 174—CARRIAGE BY RAIL

§ 174.61 [Amended]

44. § 174.61 paragraph (a) is amended by adding the words "of this subchapter" immediately following "Part 172" in the last sentence.

§ 174.600 [Amended]

45. In § 174.600 the words "of this subchapter" are added in the parenthetical immediately following the reference to § 171.8.

§ 174.700 [Amended]

46. In § 174.700 paragraph (b) is amended by changing reference "§ 173.389(j)" to "§ 173.389(i)" in the seventh line.

§ 174.715 [Amended]

47. In § 174.715 paragraph (a) is amended by changing the reference "§ 173.389(e)" to "§ 173.389(o) of this subchapter," in the fourth line, and the reference to "paragraph (a)" to "§ 173.397(a) of this subchapter" in the twelfth line.

PART 175—CARRIAGE BY AIRCRAFT

§ 175.20 [Amended]

48. Section 175.20 is amended by changing the reference "Parts 102" to "Parts 106" in the fifth line.

§ 175.75 [Amended]

49. In § 175.75 paragraph (a)(3)(ii) is amended by changing reference "§ 175.702(b)(3)" to "§ 175.702(b)(2)(iv)."

§ 175.79 [Amended]

50. In § 175.79 paragraph (a) is amended by changing the word "abroad" to "aboard" in the sixth line.

§ 175.320 [Amended]

51. In § 175.320 paragraph (a) is amended by adding the words "of this subchapter" immediately after the reference "§ 172.101" in the first line.

PART 176—CARRIAGE BY VESSEL

§ 176.27 [Amended]

52. In § 176.27 paragraph (b) is amended by adding the words "of this subchapter" immediately following the reference "§ 171.12" in the last line.

§ 176.30 [Amended]

53. In § 176.30 paragraph (a)(5)(i) is amended by adding the words "of this subchapter" immediately following the reference "§ 172.101."

§ 176.63 [Amended]

54. In § 176.63 paragraph (b) is amended by adding the words "of this subchapter" immediately following the reference "§ 172.101" in the last sentence.

§ 176.65 [Amended]

55. Section 176.65 is amended by adding the words "of this subchapter" immediately following the reference "§ 172.101" in the eighth line.

§ 176.69 [Amended]

56. In § 176.69 paragraph (c) is amended by adding the words "of this section" immediately following the reference "paragraph (a)" in the last sentence.

§ 176.76 [Amended]

57. In § 176.76 paragraph (g)(3) is amended by adding the words "of this subchapter" immediately following the reference "§ 172.101" in the first sentence.

PART 177—CARRIAGE BY PUBLIC HIGHWAY

§ 177.806 [Amended]

58. In § 177.806 paragraph (b) is amended by changing the designation "U.S. Atomic Energy Commission" to "U.S. Department of Energy" in the third line.

§ 177.834 [Amended]

59. In § 177.834 paragraph (j) is amended by changing the words "the subchapter" to "this Title" and paragraph (m) is amended by adding the words "of this subchapter" in the parenthesis immediately following the reference "§ 179.301" in the third line.

§ 177.835 [Amended]

60. In § 177.835 paragraph (j) is amended by replacing the word "subchapter" with "Title" in the parentheses following the first sentence.

§ 177.838 [Amended]

61. In § 177.838 paragraph (f) is amended by adding the words "of this subchapter" immediately following the reference "§ 173.182(b)" in the third line.

§ 177.842 [Amended]

62. In § 177.842 paragraph (c) is amended by changing the references "§ 173.391" to § 173.389(c)" in the second line and "§ 173.397" to § 173.392" in the sixth line; paragraph (f) is amended by changing the reference "§ 173.416" to "§ 172.403" in the last line.

§ 177.843 [Amended]

63. In § 177.843 paragraph (a) is amended by changing the reference "§ 173.399" to "§ 173.397(a)" in the last sentence.

§ 177.861 [Amended]

64. In § 177.861 Note 1 of paragraph (a) is amended by replacing "U.S. Atomic Energy Commission" with "U.S. Department of Energy" in the fifth line.

PART 178—SHIPPING CONTAINER SPECIFICATIONS

§ 178.0-2 [Amended]

65. In § 178.0-2 paragraph (b) is amended by adding the words "of this subchapter," immediately following the reference "§ 173.28" in the sixteenth line.

§§ 178.38-3, 178.39-3, 178.42-3, 178.50-3, 178.51-3, 178.53-3, 178.55-3, 178.56-3, 178.57-3, 178.59-3, 178.60-3, 178.61-3, and 178.68-3 [Amended]

66. The words "of this subchapter" are added immediately following the reference "§ 173.300a" in each of the following sections:

178.38-3	178.56-3
178.39-3	178.57-3
178.42-3	178.59-3
178.50-3	178.60-3
178.51-3	178.61-3
178.53-3	178.68-3
178.55-3	

§ 178.36-10 [Amended]

67. In § 178.36-10 paragraph (b) is corrected by changing the formula to read as follows:

"$S=[P(1.3D^2+0.4d^2)]/(D^2-d^2)$".

§ 178.38-10 [Amended]

68. In § 178.38-10 paragraph (b) is corrected by changing the formula to read as follows:

"$S=[P(1.3D^2+0.4d^2)]/(D^2-d^2)$".

§ 178.39-10 [Amended]

69. In § 178.39-10 paragraph (b) is corrected by changing the formula to read as follows:

"$S=[P(1.3D^2+0.4d^2)]/(D^2-d^2)$".

§ 178.83-7 [Amended]

70. In § 178.83-7 paragraph (a) table is amended by renumbering footnote number "3" as number "2".

§ 178.205-13 [Amended]

71. In § 178.205-13 paragraph (a) is amended by changing the reference "§ 78.205-12" to "§ 178.205-12."

§ 178.225-2 [Amended]

72. In § 178.225-2 paragraph (a) is amended by changing the reference "Part 73" to "Part 173."

§ 178.238-3 [Amended]

73. In § 178.238-3 paragraph (a) is amended by changing the reference "§ 78.238-2" to "§ 178.238-2."

§ 178.340-2 [Amended]

74. In § 178.340-2 paragraph (b) and § 178.340-8 paragraph (b) are amended by changing the word "chapter" to "Title."

Appendix A [Amended]

75. In Table 1 of Appendix A to Part 178 the footnote number 3 beside the column headed Grade 3 is corrected to read number 2.

(49 U.S.C. 1803, 1804, 1808; 49 CFR 1.53 and App A to Part 1)

Note.—The Materials Transportation Bureau has determined that this final rule will not have a major economic impact under the terms of Executive Order 12221 and DOT implementing procedures (44 FR 11034). A regulatory evaluation is available in the public docket.

Issued in Washington, D.C., on December 1, 1980.

L. D. Santman,

Director, Materials Transportation Bureau.

[FR Doc. 80-38429 Filed 12-10-80; 8:45 am]

BILLING CODE 4910-60-M

Federal Highway Administration

49 CFR Part 301

Delegation of Authority Relating to Motor Carrier Safety; Technical Correction

AGENCY: Federal Highway Administration (FHWA), DOT.

ACTION: Technical correction to final rule.

SUMMARY: This document deletes an erroneous paragraph reference from a final rule on a delegation of authority relating to motor carrier safety published at 45 FR 57674, August 28, 1980.

EFFECTIVE DATE: December 11, 1980.

FOR FURTHER INFORMATION CONTACT: Mr. Gerald J. Davis, Bureau of Motor Carrier Safety, 202-426-9767, or Mrs. Kathleen S. Markman, Office of the Chief Counsel, 202-426-0346, Federal Highway Administration, 400 Seventh Street, SW., Washington, D.C. 20590. Office hours are from 7:45 a.m. to 4:15 p.m. ET, Monday through Friday.

SUPPLEMENTARY INFORMATION: Sections 831-835 of Title 18, United States Code,

were repealed by Title II of Pub. L. 96–129 (November 30, 1979, 93 Stat. 1003). Accordingly, paragraph (d) of § 1.48 of Title 49, Code of Federal Regulations, was revoked and reserved by final rule published at 45 FR 14576 on March 6, 1980. Paragraph (d) had provided for the delegation of authority to the Federal Highway Administrator to enforce the provisions of 49 U.S.C. §§ 831–835. This authority was subsequently delegated to the Associate Administrator for Safety and to the Director of the Bureau of Motor Carrier Safety by 49 CFR 301.60(d)(1)(i) and (e)(1), respectively. In an amendment to 49 CFR 301.60 published at 45 FR 57674 on August 28, 1980, paragraph (d) was inadvertently included in the delegations amended. Consequently, the purpose of this document is to delete the references to 49 CFR 1.48(d) from the amendments to 49 CFR 301.60(d)(1)(i) and (e)(1).

§ 301.60 [Amended]

In consideration of the foregoing, 49 CFR 301.60 is amended by deleting paragraph "(d)" from paragraphs (d)(1)(i) and (e)(1).

(Title II of Pub. L. 96–129, 93 Stat. 1003; 49 U.S.C. § 1655; 49 CFR 1.48)

Issued on: December 4, 1980.

Cheryl S. McMurry,

Chief Counsel.

[FR Doc. 80-38636 Filed 12-10-80; 8:45 am]

BILLING CODE 4910-22-M

National Highway Traffic Safety Administration

49 CFR Part 511

[Docket No. 78-15; Notice 2]

Adjudicative Procedures

AGENCY: National Highway Traffic Safety Administration, DOT.

ACTION: Final rule.

SUMMARY: This rule establishes procedures that will be followed in adjudications to enforce Title V of the Motor Vehicle Information and Cost Savings Act (dealing with automotive fuel economy). These regulations supersede interim regulations established in 1978. They are necessary to carry out the authority vested in the Secretary of Transportation to enforce the automotive fuel economy standards, gas mileage guide availability, reporting, and other requirements of that title and regulations established thereunder. These regulations are intended to enable a full, fair, and expeditious hearing in all cases of alleged violations of these requirements.

DATE: This regulation is effective January 12, 1981.

FOR FURTHER INFORMATION CONTACT: Roger Fairchild, Office of Chief Counsel, National Highway Traffic Safety Administration, 400 Seventh Street, S.W., Washington, D.C. 20590, (202) 426–2992.

SUPPLEMENTARY INFORMATION: On October 16, 1978, in 43 FR 47507, the National Highway Traffic Safety Administration (NHTSA) established interim procedures for conducting enforcement proceedings under Title V of the Motor Vehicle Information and Cost Savings Act, 15 U.S.C. 2001 *et seq.* Because of the anticipated need to have enforcement procedures in place as soon as possible and because of the procedural nature of the rules, the interim procedures were made effective 30 days after their publication. See 5 U.S.C. 553(b). Although the use of notice and comment rulemaking procedures was not legally required to establish these rules, the agency deemed it desirable to obtain the views of interested individuals and organizations on the procedures. Therefore, NTHSA included an invitation in the preamble to the interim procedures for the public to comment on those procedures while they were in effect to assist in developing a final rule.

Only limited comment was received on the interim procedures. The only detailed comments submitted were those of the Motor Vehicle Manufacturers' Association (MVMA). Ford Motor Company and General Motors submitted brief comments which incorporated and reiterated the comments of MVMA. No automobile dealers (who are potentially subject to the regulations), dealer organizations, public interest groups, or other individuals or organizations commented on the interim procedures. The comments received expressed general approval for the interim procedures, suggesting only relatively minor revisions.

Therefore, the agency is establishing final adjudicative procedures for fuel economy-related cases, with only minor differences from the interim procedures. A detailed discussion of the features of the selected procedures is contained in the preamble to the interim procedures and will not be repeated here. Generally, the rule establishes full, trial-type procedures in accordance with sections 554, 556, and 557 of Title V of the United States Code (the Administrative Procedure Act), due to the requirement in section 508(a)(2) of the Cost Savings Act for a hearing "on the record" in fuel economy enforcement cases. The specific procedures adopted were based largely on those employed by the Consumer Product Safety Commission (16 CFR Part 1025) and the Federal Rules of Civil Procedure. Departures from those models have been made in certain instances to accommodate specific requirements under the Cost Savings Act.

Most Significant Changes to the Interim Procedures

The most significant change to the interim procedures is the deletion of a "two-tier" system (interveners and non-party participants) for participation in enforcement hearings by individuals or organizations other than the agency and the respondent, in favor of a single "participant" status. Also, some changes are made to the language used in certain areas of the regulation (particularly with respect to discovery) to make the language more consistent with the Federal Rules of Civil Procedure. The final procedures also recognize the privileged status of attorney's "work product" with respect to the discovery process.

Comments Received on the Interim Procedures

The first point raised by MVMA and GM relates to the issue of whether the assessment of civil penalties for each day of violations of section 507(3) of the Act should run from the time of the alleged illegal conduct or from the end of the required hearing on the alleged violation. This issue was not addressed in the interim procedures. In the case of a refusal by a manufacturer to respond to a special order issued under section 505(b) of the Act, for example, the commenters would argue that civil penalties of up to the authorized $10,000 per day should not begin accruing until after completion of a hearing, rather than from the date on which the response to the order was due. MVMA bases its argument on its interpretation of the relevant statutory language and on constitutional due process guarantees. Specifically, MVMA argues that, under the Act, no violation has occurred until there has been a completed adjudication.

The agency cannot accept these arguments. MVMA strains the meaning of the term "violation" by attempting to make the completion of an adjudication an element of the unlawful conduct. Section 507(3) specifies the conduct which is to be considered unlawful as "the failure of any person (A) to comply with any provision of this part applicable to such person * * *" The requirement for a public hearing established in section 508(a)(2) is a

prerequisite to the assessment of civil penalties, but if, after the completion of the hearing, the agency's view that a violation has occurred is vindicated, then penalties may properly be assessed for each day since the violation (i.e., unlawful conduct) first occurred. Any other reading of the statute would encourage those subject to the requirements of the Act to delay in complying with those requirements.

MVMA's argument is essentially identical to the one it made with respect to the agency's interim rule on Information Gathering Powers, 42 FR 64628 December 27, 1977, and rejected at the time a final rule on that subject was established. See 45 FR 29032. The preamble to that rule discusses cases decided under statutes with statutory language similar to Title V of the Act. That discussion concludes that penalties should accrue from the date of the actual unlawful conduct, and that legal remedies exist to prevent penalties from adding up during the course of a non-frivolous challenge to the enforcement action. However, to remove any ambiguity in the regulations, the time when civil penalties begin accruing has been clarified in the final procedures, as requested by MVMA.

MVMA also raises several objections about the provisions in the interim procedures for intervention. These objections are generally based on the concern that interveners might cause "unnecessary confusion and delay" and thereby adversely affect the rights of respondents. The Act permits "any interested person" to participate in enforcement proceedings, but does not specify the nature of that "participation" right.

A number of authorities apparently support limiting the extent of the participation in these enforcement proceedings to the "non-intervener" status established in the interim procedures. According to the Administrative Conference of the United States,

> Intervention or other participation in enforcement or license revocation proceedings should be permitted when a significant objective of the adjudication is to develop and test a new policy or remedy in a precise factual setting or when the prospective intervener is the de facto charging party. Public participation in enforcement proceedings, license revocations or other adjudications where the issue is whether the charged respondent has violated a settled law or policy should be permitted only after close scrutiny of the effect of intervention or other participation on existing parties.

Recommendations of the Administrative Conference of the United States 1 CFR 301.71-6. Support for this view is contained in Cramton, "The Why, Where, and How of Broadened Public Participation in the Administrative Process," 60 Georgetown Law Journal 525 (1972) and Gellhorn, "Public Participation in Administrative Proceedings," 81 Yale Law Journal 159 (1972). The scope of participation should depend on "the nature of the issues, the intervener's interests, its ability to present relevant evidence and arguments, and the number, interests and capacities of the other parties." Administrative Conference, id.

The agency concurs with these authorities and believes that the rights accorded "non-interveners" under the interim procedures are sufficient for all public participants. The non-interveners were authorized to make a written or oral statement of position, file proposed findings of fact, conclusions of law and a post hearing brief, and file an appellate brief if an appeal is taken. Typical of the issues which are likely to be raised in an enforcement proceeding under the Act are questions relating to the agency's authority to compel the submission of information. Issues of this type would likely be resolved on the basis of written briefs and oral arguments by all parties in the proceeding, and all participants have the right to make this type of submission. Issues involving EPA tests procedures and data are expected to be resolved before that agency, and results of hearings on those issues before EPA would be accepted by NHTSA. For hearings involving purely factual disputes, such as whether an automobile dealer properly displayed gas mileage booklets, it is unlikely that there will be any great interest in participation in any capacity, much less as a full party.

Therefore, the agency is limiting participation in enforcement proceedings by individuals and organizations other than the agency and the respondent to the rights given "participants" under the interim procedures. *Anyone* who desires to participate in these proceedings may do so in this manner.

MVMA also raises several issues relating to settlement of cases involving alleged violations of the requirements of Title V. Their first objection relates to the extent to which NHTSA may compromise or settle cases involving violations of fuel economy standards. MVMA interprets the regulations to prohibit settlements even where, after commencement of a proceeding, a clear error is discovered in the basis for the action. In such cases, the agency agrees that completion of the proceeding on the basis of erroneous information would be inappropriate. The regulations permit "confession of error" type settlements through an amended complaint. See § 511.13.

MVMA also suggests that criteria be added to § 511.26 of the regulations to provide guidance about the manner in which the agency would exercise its discretion to settle non-standards cases. MVMA suggests that such factors as the gravity of a violation and any good faith efforts to comply be considered. The agency agrees that these are relevant factors to be considered in settling such a case, and the regulations have been amended accordingly.

MVMA objects to NHTSA's characterization of the authority to compromise standards-enforcement cases as "discretionary," suggesting rather that when any of the situations specified in section 508(b)(3) exists (bankruptcy, strike, fire, etc.), an offset in the amount of the assessed civil penalty should be automatic. MVMA fails to explain Congress' use of discretionary, rather than mandatory, language in that provision, however. Therefore, the agency remains of the view that, when the public interest so requires, the agency may not accept an offer of settlement based on one of the enumerated criteria. In attempting to determine whether the public interest requires the agency to accept a particular offer of compromise, the agency needs, contrary to MVMA's assertion, information on any steps a manufacturer has taken to mitigate the effect of factors such as a fire or a strike, financial documents assessing the manufacturer's ability to pay civil penalties, and the basis for any FTC certification that payment of penalties would result in a "substantial lessening of competition." This information would be used by NHTSA to assess the good faith of the manufacturer in seeking the compromise and the probability that harm would result from payment of penalties. Similarly, the imposition of conditions on a settlement is specifically authorized by section 508(b)(3), and the agency has elected to require conditions (usually some not otherwise specifically required action to promote improved automotive fuel economy) in most cases. This is done to help assure that the settlement is in the public interest and that the manufacturer has in fact acted in good faith by taking all reasonable actions to increase the average fuel economy of its fleet of automobiles. Also, § 511.26(e) is revised to clarify that the Presiding Officer is to transmit all settlement proposals to the Administrator.

MVMA argues that the interim procedures should be amended to require that the Administrator provide a discussion of the basis for any denial of a settlement offer. The regulations currently require such a discussion whenever a settlement is allowed. The agency agrees that such a requirement is appropriate to provide the public with an explanation of the basis for the agency's refusal to exercise its discretionary authority to reduce civil penalties.

MVMA raises two points with respect to the application of earned monetary credits to civil penalties assessed for violations of fuel economy standards. First, it is noted that the regulations fail to acknowledge the existence of the credit scheme established in section 508 of the Act, and it is recommended that the regulations be amended to do so. NHTSA has no objection to making such an addition to the current procedures.

MVMA and GM also argue that the reduction of civil penalty liabilities in cases where one of the events specified in section 508(b)(3)(B) occurs (fire, strike, act of God) should be made without corresponding reduction of a monetary credit which may exist for that manufacturer in another model year. The Act authorizes the Secretary of Transportation to reduce a civil penalty for a particular model year if that penalty was due in whole or part to one of the specified fortuitous events which affected that year's fleet of vehicles. Nothing in the statute requires that another year's earned credits would be affected by such a reduction, and the agency does not contemplate requiring that credits be used in such a situation.

MVMA's final major objection relates to the manner in which test related issues will be raised in enforcement hearings. That organization notes in its comments that the preamble to the interim procedures indicated that official notice might be taken of EPA fuel economy test results in some circumstances. It was not the agency's intention to imply that test related issues would not be challengeable by a manufacturer. Indeed, the agency recognizes that the main factual questions involved in a standards-enforcement case may involve the acceptance or rejection of manufacturer-supplied fuel economy data, and other issues such as the comparability of results of test procedures used for measuring fuel economy to results obtained under 1975 test procedures (see section 503(d) of the Act). However, the agency anticipates that issues involving aspects of the fuel economy program which are administered by EPA will be raised before that agency, not NHTSA. MVMA suggests that NHTSA adopt some form of compulsory joinder provision in the regulations, whereby EPA would be made a party in any hearing in which test related issues are implicated. However, NHTSA knows of no precedent for such a provision, and has doubt about the existence of any authority for one Federal agency to compel the participation of another agency in the former's proceedings.

Although the agency is not at this time making any changes in the regulations dealing with procedures for resolving test procedure related questions, it is considering seeking public comment on an amendment to these rules which would require that those issues be raised before EPA. EPA currently has a procedure for resolving disputes on these matters (see 40 CFR 600.009) which should satisfy the requirements of the Act for a determination "on the record" of violations of fuel economy requirements. Further, that agency is best equipped by reason of its expertise to resolve these technical issues under the statutory division of responsibilities within the government. Ideally, test related issues would be resolved solely before EPA, with the results of EPA's hearings being accepted by NHTSA as *res judicata*. This approach would avoid any duplication of effort resulting from hearings on the same issues before two different agencies.

Also suggested by MVMA are a number of technical amendments to the regulations, which are intended to make the language used more consistent with that used in the Federal Rules of Civil Procedure (FRCP) and the Federal Rules of Evidence. The main advantage of relying on the language used in these judicial rules is that reference can be made to a body of a case law construing that language where it is ambiguous, while interpreting new language might involve dealing with a series of cases of first impression. It was mainly for that reason that the agency relied in part on the Federal Rules of Civil Procedure as a model for certain provisions in the interim procedures. See 43 FR 47508.

First, MVMA suggests changing the criterion for permitting joinder of proceedings from the "similar issues" requirement of the interim procedures, to a requirement of a "common question of law or fact", as specified in Rule 42(a) of the FRCP. Also, MVMA suggests permitting joinder where to do so would "tend to avoid unnecessary costs or delay" as required under Rule 42(a), rather than "to such extent and upon such terms as may be deemed proper," as the interim procedures permitted. In addition, MVMA recommends the addition of a provision like that in Rule 42(b) which would permit separate hearings where doing so would promote economy or convenience or would avoid prejudice to a party. Since adopting these suggestions would help clarify the procedures, the final rule has been amended accordingly.

A number of changes to the interim procedures in the area of discovery are also suggested by MVMA. First, MVMA suggests that the discovery procedures be modeled more closely after Rule 26 of the FRCP, for reasons of ease of application (as discussed earlier) and fairness. The interim procedures provided that all relevant material is discoverable, with the only stated exception being documents accompanying the agency staff's recommendation as to whether a complaint should issue. The Rule 26 procedure would exclude attorney's work product, the mental impressions, conclusions, and opinions of a party's attorney, and would permit discovery of materials prepared in anticipation of litigation only on a showing of need and the inability to obtain the same material in some other manner. Considerations of fairness militate in favor of making this change. The factual portions of documents accompanying the agency staff's recommendations on a complaint would be made available to all parties, as part of the complaint, and the opinion portions of that material would be protected under Rule 26-type procedure. Further, the privileged status of attorney's work product is well established in both judicial and administrative contexts. Therefore, the final procedures adopt this recommendation.

MVMA also recommends that only those experts who may be called to testify should be subject to discovery. The agency cannot accept this suggestion. It may be that certain experts within a corporation may hold opinions which are highly relevant to a proceeding, but those experts may not be called as witnesses by the corporation. Without the opportunity for opposing parties to obtain information on the identity and views of these individuals through discovery, it would be impossible for those parties to determine whether the experts should be called as witnesses, and relevant information and qualified opinions could be lost. Therefore, the provision in the interim procedures is retained in the final procedures.

The interim procedures could be interpreted to require that the person who answered each individual written

interrogatory must sign that answer and MVMA recommends clarifying this point to permit a single representative of a corporate party to sign. The agency is adopting this suggestion. MVMA also suggests that the 20 day period for responding to a request for production of documents be extended to 30 days. However, the interim procedures already permit the 20 day period to be extended, when necessary. Therefore, in the interest of expediting proceedings, this recommendation was not adopted in the final procedures. MVMA's recommendation that testimony of any party or its representatives be permitted as soon as an answer is filed has been adopted, to make that provision consistent with the rest of the discovery provisions in the regulation. The interim procedures vested substantial control over such testimony in the Presiding Officer; and this control is retained in the final procedures. The Presiding Officer can assure that parties do not abuse the right to have such testimony taken to create delay, or where written forms of discovery would be more appropriate. The interim procedures have also been amended to permit parties to preserve the testimony of any witness, not just the parties on witnesses. However, the reference in the MVMA comments to perpetuation of testimony pursuant to Rule 27 of the FRCP is not applicable to the provision found in § 511.35(h). This provision is intended to permit the taking and preservation of testimony from a witness who is expected to be unable to attend the hearing, but not prior to the commencement of the proceeding as is permitted by Rule 27. Because administrative law judges will not ordinarily be appointed until after proceedings begin, it will be impracticable to obtain leave of the presiding officer to perpetuate testimony in anticipation of a complaint not yet issued. Moreover, adjudicative proceedings under the Act are unlikely to present issues of fact determinable exclusively upon the testimony of unique witnesses who might be available to testify only at times before the commencement of proceedings. Therefore the agency does not perceive a need for providing a procedure for perpetuation of testimony fully analogous to that found in Rule 27 of the FRCP.

Also in accord with the decision to conform as much as practicable with the language of the FRCP where a similar procedure is intended, the prescribed uses of deposition testimony found in § 511.35(i) are amended to parallel Rule 32 of the FRCP.

MVMA also argues that some of the sanctions specified in the interim procedures for failure to comply with a discovery order are too extreme, have no counterpart in the FRCP, and should be eliminated. The cited sanction, excluding all matter obtained in discovery or excluding the recalcitrant party, does in fact have a counterpart in the FRCP (see Rule 37(b)(1)(B) and (C) which permit prohibitions on introducing "designated matters in evidence" and "rendering a judgment by default against the disobedient party") and would only be applied where "just," as in the FRCP. Therefore, no change to the interim procedures is made with respect to this point. Nor has the agency adopted MVMA's suggestion that sanctions be imposed immediately or not at all. The significance of a failure to comply with a discovery order may not become fully apparent until well after the failure to comply.

Modifications to the procedure for motions to quash or limit subpoenas were also suggested by MVMA. MVMA suggests that provision be made for extending the time to respond to the subpoena or the motion to quash, that an appeal procedure be added, that denials of motions to quash be made on the record, and that the Presiding Officer be permitted to modify subpoenas. Section 511.15 of the interim procedures already provides for time extensions, when necessary. Interlocutory appeals are permitted on these matters where confidential information is involved or where compliance with the subpoena somehow involves a controlling question of law or policy. The time limit for the filing of an application for interlocutory appeal has been clarified to make it applicable to all such applications and not just those advancing one of the grounds set forth in § 511.24(b)(1). Appeals are also permitted after a final decision under the interim procedures. Allowing appeals in other cases would unnecessarily delay the proceeding. The agency has adopted suggestions by MVMA that reasons for denials of motions to quash be provided on the record and that "modifications" of a subpoena be authorized.

MVMA further suggests elimination of "confusion of issues" as grounds for excluding evidence. As MVMA notes, this factor appears in the Federal Rules of Evidence primarily to apply to jury trials, where jurors might be unable to deal with certain complex issues. This factor is deleted in the final procedures since it is not fully relevant and tends to duplicate the criteria of relevance, undue delay, and the needless presentation of cumulative evidence.

The final group of objections raised by MVMA involve the handling of *in camera* or confidential materials. First, it is argued that certain information beyond that protected under the Freedom of Information Act, 5 U.S.C. 552, should be entitled to *in camera* treatment in an enforcement hearing. Among this type of material would be material which might be embarrassing or otherwise sensitive, but which would not qualify as a trade secret or fall within any of the other exempt classes of information in the Freedom of Information Act. The agency cannot accept this contention since Section 505(d)(1) of the Cost Savings Act requires the agency to disclose any fuel economy related information to the public, except in the case of trade secret information.

The procedures have been clarified to permit interlocutory appeals of a ruling of the Presiding Officer denying *in camera* treatment for information claimed to be confidential. The interim procedures permitted an immediate appeal on rulings requiring the production of documents claimed to be confidential, but not explicitly in the similar situation involving a denial of *in camera* treatment. All such rulings are automatically stayed for 10 days, permitting the aggrieved party to appeal.

MVMA has suggested that advance determinations of confidentiality be made by the agency (i.e., a submitter of information would be permitted to withdraw that information if a request for *in camera* treatment is denied). The agency will address this question in detail in its forthcoming final rule on Confidential Business Information. Until that rule is issued, the agency will abide by its proposed procedures which do not provide for advance determinations (due to concerns about consistency with the Freedom of Information Act). See 43 FR 22412 (May 25, 1978).

MVMA requests that criteria and procedures be established for denying requests for *in camera* treatment. The interim procedures specified that the criteria and procedures to be used are those for determining whether information is entitled to confidential treatment under the Freedom of Information Act, as noted above. Those criteria and procedures are spelled out in that Act, in the case law under that Act, and in the agency's proposed confidentiality regulations cited in the previous paragraph. Therefore, no change to the interim procedures is being made in this area.

MVMA also argues that reference must be made in the regulations to 44

U.S.C. 3508, which provides generally that when an agency receives confidential information from another government agency, employees of the receiving agency are fully liable for any unauthorized release of that information. In this regard, MVMA claims that the provisions of 44 U.S.C. 3508 govern and "take precedence over" any decision by the agency to release the information. If the implication of this comment is that NHTSA is bound by the determination of the agency that provides the information that the information is confidential, or that NHTSA's discretionary authority to release confidential information does not apply to information obtained from another agency, then NHTSA cannot agree that 44 U.S.C. 3508 compels that result. NHTSA agrees that the statutory provision in question applies to an unauthorized release of confidential information obtained from another agency, but no conflict between that provision and the current procedures is apparent. Therefore, no change to the regulation is required on this point.

At the request of MVMA, the interim procedures have been clarified to assure that the granting of motions for access to *in camera* materials will be done on the record. This was implicit in the regulation, since the granting of such a motion must be accompanied by a protective order preventing unnecessary disclosure of the information.

MVMA also recommends that sanctions be specified in the regulations for the unauthorized release by a party of *in camera* materials. Suggested sanctions include denial of the right to continue as a party or participant and the denial of access to other *in camera* materials. Section 511.76 of the interim procedures permits the exclusion of a party, participant, or one of their representatives in such a case. The agency agrees that it is appropriate to add the second sanction mentioned above to the regulations, and will do so in the final procedures. However, the agency fails to see how MVMA's recommendation that persons seeking access to confidential information be required to agree in writing and in advance to comply with the terms of a protective order will have any added impact on a party or other person who is unwilling to comply with the order.

MVMA's final comment notes that the agency should not lightly use its discretionary authority to release confidential information. To date, the agency has rarely used this authority under section 505(d)(1) of the Cost Savings Act, and has taken steps to minimize the impact of such a release on the submitter of the information when the authority has been used. This policy will continue.

A small number of further minor changes have been made to the regulations in the interest of reducing unnecessary burdens on parties or participants in proceedings and on the agency itself. First, the interim procedures imply that a full scale hearing is held each time a complaint is issued, whether the respondent wants the full hearing or not. The final procedures permit respondents to *request* a full hearing (and such requests will always be honored) or permits the respondent to make its case solely on written submissions or otherwise, if it desires. Also, some requirements as to the size of paper on which documents are printed, the size of margins, and the type of print to be used have been deleted. Finally, the requirement that a copy of the entire complaint in every enforcement case (including dealer-mileage guide cases) be printed in the Federal Register has been deleted in favor of a more limited requirement that a notice be published generally describing the proceeding and providing information on public participation in the proceeding.

The agency has determined that the establishment of these procedures does not constitute a "major Federal Action significantly affecting the environment," and therefore, an environmental impact statement is not required. Nor should these procedures establish any additional costs beyond those imposed by the Cost Savings Act itself. Therefore, no Regulatory Analysis is required to be prepared under Executive Order 12221.

(Sec. 9, Pub. L. 89-670, 80 Stat. 981 (49 U.S.C. 1657); sec. 301, Pub. L. 94-163, 89 Stat. 911 (15 U.S.C. 2008); delegation of authority at 49 CFR 1.50)

Issued on December 3, 1980.

Joan Claybrook,

Administrator.

Title 49, Chapter V, of the Code of Federal Regulations is amended by adding Part 511 to read as follows:

PART 511—ADJUDICATIVE PROCEDURES

Subpart A—Scope of Rules; Nature of Adjudicative Proceedings, Definitions

Sec.
511.1 Scope of the rules.
511.2 Nature of adjudicative proceedings.
511.3 Definitions.

Subpart B—Pleadings; Form; Execution; Service of Documents

511.11 Commencement of proceedings.
511.12 Answer.
511.13 Amendments and supplemental pleadings.
511.14 Form and filing of documents.
511.15 Time.
511.16 Service.
511.17 Public participation.
511.18 Joinder of proceedings.

Subpart C—Prehearing Procedures; Motions: Interlocutory Appeals; Summary Judgment; Settlement

511.21 Prehearing conferences.
511.22 Prehearing briefs.
511.23 Motions.
511.24 Interlocutory appeals.
511.25 Summary decision and order.
511.26 Settlement.

Subpart D—Discovery; Compulsory Process

511.31 General provisions governing discovery.
511.32 Written interrogatories to parties.
511.33 Production of documents and things.
511.34 Requests for admission.
511.35 Testimony upon oral examination.
511.36 Motions to compel discovery.
511.37 Sanctions for failure to comply with order.
511.38 Subpenas.
511.39 Orders requiring witnesses to testify or provide other information and granting immunity.

Subpart E—Hearings

511.41 General rules.
511.42 Powers and duties of presiding officer.
511.43 Evidence.
511.44 Expert witnesses.
511.45 In camera materials.
511.46 Proposed findings, conclusions, and order.
511.47 Record.
511.48 Official docket.
511.49 Fees.

Subpart F—Decision

511.51 Initial decision.
511.52 Adoption of initial decision.
511.53 Appeal from initial decision.
511.54 Review of initial decision in absence of appeal.
511.55 Final decision on appeal or review.
511.56 Effective date of order.
511.67 Effective date of order.

Subpart G—Settlement Procedure in Cases of Violation of Average Fuel Economy Standards

511.61 Purpose.
511.62 Definitions.
511.63 Criteria for settlement.
511.64 Petitions for settlement; timing; contents.
511.65 Public comment.
511.66 Confidential business information.
511.67 Settlement order.

Subpart H—Appearances; Standards of Conduct

511.71 Who may make appearances.
511.72 Authority for representation.
511.73 Written appearances.
511.74 Attorneys.
511.75 Persons not attorneys.

Sec.
511.76 Qualifications and standards of conduct.
511.77 Restrictions as to former members and employees.
511.78 Prohibited communications.
Appendix I.—Final Prehearing Order.

Authority: Sec. 9, Pub. L. 89-670, 80 Stat. 981 (49 U.S.C. 1657); sec. 301, Pub. L. 94-163, 89 Stat. 901 (15 U.S.C. 20002); delegation of authority at 41 FR 25015, June 22, 1976.

Subpart A—Scope of Rules; Nature of Adjudicative Proceedings, Definitions

§ 511.1 Scope of the rules.

This part establishes rules of practice and procedure for adjudicative proceedings conducted pursuant to section 508(a)(2) of the Motor Vehicle Information and Cost Savings Act (15 U.S.C. Pub. L. 94-163, 89 Stat. 911, Sec. 2008(a)(2)), which are required by statute to be determined on the record after opportunity for a public hearing.

§ 511.2 Nature of adjudicative proceedings.

Adjudicative proceedings shall be conducted in accordance with title 5, United States Code, sections 551 through 559 and this part. It is the policy of the agency that adjudicative proceedings shall be conducted expeditiously and with due regard to the rights and interests of all persons affected, and to the public interest. Therefore, the presiding officer and all parties shall make every effort at each stage of a proceeding to avoid unnecessary delay.

§ 511.3 Definitions.

As used in this part:

(1) The term "application" means an *ex parte* request by a party for an order that may be granted or denied without opportunity for response by any other part.

(2) The term "NHTSA" means the National Highway Traffic Safety Administration.

(3) The term "Administrator" means the Administrator of the National Highway Traffic Safety Administration.

(4) The term "Complaint Counsel" means prosecuting counsel for the NHTSA.

(5) The term "motion" means a request by a party for a ruling or order that may be granted or denied only after opportunity for response by each affected party.

(6) The term "party" means the NHTSA, and any person named as a respondent in a proceeding governed by this part.

(7) The term "person" means any individual, partnership, corporation, association, public or private organization, or Federal, State or municipal governmental entity.

(8) The term "petition" means a written request, made by a person or a party and addressed to the Presiding Officer or the Administrator, that the addressee take some action.

(9) The term "Presiding Officer" means the person who conducts an adjudicative hearing under this part, who shall be an administrative law judge qualified under title 5, United States Code, section 3105 and assigned by the Director, Office of Administrative Law Judges, Office of Personnel Management.

(10) The term "Respondent" means any person against whom a complaint has been issued.

(11) The term "Executive Secretary" means the Executive Secretary of the National Highway Traffic Safety Administration.

(12) The term "staff" means the staff of the National Highway Traffic Safety Administration.

Subpart B—Pleadings; Form; Execution; Service of Documents

§ 511.11 Commencement of proceedings.

(a) *Notice of institution of an enforcement proceeding.* An adjudicative proceeding under this part is commenced by the issuance of a complaint by the NHTSA.

(b) *Form and content of complaint.* The complaint shall be signed by the Complaint Counsel and shall contain the following:

(1) Recital of the legal authority for instituting the proceeding, with specific designation of the statutory provisions involved in each allegation.

(2) Identification of each respondent.

(3) A clear and concise statement of the charges, sufficient to inform each respondent with reasonable definiteness of the factual basis of the allegations of violation. A list and summary of documentary evidence supporting the charges shall be attached.

(4) A statement of the civil penalty which the Complaint Counsel believes is in the public interest, or which is required by law. In the case of civil penalties assessed for violations of section 507(3) of the Motor Vehicle Information and Cost Savings Act (15 U.S.C. 2007(3)), the amount of such penalty shall be calculated from the time of the alleged violation. In the case of civil penalties assessed for violations of section 507 (1) or (2) of that Act, any monetary credits available to offset those civil penalties shall be specified.

(5) The right of the respondent to a hearing on the alleged violations.

(c) *Notice to the Public.* Once a complaint is issued, notice of it shall be immediately submitted to the Federal Register for publication. The notice in the Federal Register shall briefly describe the nature of the proceeding and state that petitions to participate in the proceeding must be filed no later than the first prehearing conference.

§ 511.12 Answer.

(a) *Time for filing.* A respondent shall have twenty (20) days after service of a complaint within which to file an answer.

(b) *Content of answer.* An answer shall conform to the following:

(1) *Request for hearing.* Respondent shall state whether it requests a full, adjudicatory hearing or whether it desires to proceed on the basis of written submissions. If a hearing is requested, respondent shall specify those issues on which a hearing is desired.

(2) *Contested allegations.* An answer in which the allegations of a complaint are contested shall contain:

(i) Specific admission or denial of each allegation in the complaint. If the respondent is without knowledge or information sufficient to form a belief as to the truth of an allegation, respondent shall so state. Such a statement shall have the effect of a denial. Denials shall fairly meet the substance of the allegations denied. Allegations not thus answered shall be deemed to have been admitted.

(ii) A concise statement of the factual and/or legal defenses to each allegation of the complaint.

(3) *Admitted allegations.* If the respondent admits or fails to deny any factual allegation, he or she shall be deemed to have waived a hearing as to such allegation.

(c) *Default.* Failure of the respondent to file an answer within the time provided (or within an extended time, if provided), shall be deemed to constitute a waiver of the right to appear and contest the allegations set forth in the complaint and to authorize the Presiding Officer to make such findings of fact, as are reasonable under the circumstances.

§ 511.13 Amendments and supplemental pleadings.

Whenever determination of a controversy on the merits will be facilitated thereby, the Presiding Officer upon motion, may allow appropriate amendments and supplemental pleadings which do not unduly broaden the issues in the proceeding or cause undue delay.

§ 511.14 Form and filing of documents.

(a) *Filing.* Except as otherwise provided, all documents submitted to the Administrator or a Presiding Officer

shall be addressed to and filed with the Executive Secretary. Documents may be filed in person or by mail and shall be deemed filed on the day of filing or mailing.

(b) *Caption.* Every document shall contain a caption setting forth the name of the action in connection with which it is filed, the docket number, and the title of the document.

(c) *Copies.* An original and nine (9) copies of all documents shall be filed. Documents may be reproduced by printing or any other process, provided that all copies filed are clear and legible.

(d) *Signature.* (1) The original of each document filed shall be signed by a representative of record for the party; or in the case of parties not represented, by the party; or by a partner, officer, or regular employee of any corporation, partnership, or association, who files an appearance on behalf of the party.

(2) The act of signing a document constitutes a representation by the signer that the signer has read it; that to the best of the signer's knowledge, information and belief, the statements made in it are true; and that it is not filed for purposes of delay.

§ 511.15 Time.

(a) *Computation.* In computing any period of time prescribed or allowed by the rules in this part, the day of the act, event, or default from which the designated period of time begins to run shall not be included. The last day of the period so computed shall be included, unless it is a Saturday, a Sunday, or a legal holiday, in which event the period runs until the end of the next day which is not a Saturday, a Sunday, or a legal holiday. When the period of time prescribed or allowed is less than 7 days, intermediate Saturdays, Sundays, and legal holidays shall be excluded in the computation. As used in this part, "legal holiday" includes New Year's Day, Washington's Birthday, Memorial Day, Independence Day, Labor Day, Columbus Day, Veteran's Day, Thanksgiving Day, Christmas Day, and any other day appointed as a holiday by the President or the Congress of the United States.

(b) *Additional Time After Service by Mail.* Whenever a party is required or permitted to do an act within a prescribed period after service of a document and the document is served by mail, three (3) days shall be added to the prescribed period.

(c) *Extensions.* For good cause shown, the Presiding Officer may extend any time limit prescribed or allowed under this part or by order of the Administrator or the Presiding Officer, except those governing the filing of interlocutory appeals and appeals from Initial Decisions and those expressly requiring the Administrator's action. Except as otherwise provided by law, the Administrator, for good cause shown, may extend any time limit prescribed under this part, or by order of the Administrator or the Presiding Officer. A party or participant may petition the Presiding Officer or the Administrator, as appropriate, for an extension under this paragraph. Such a petition shall be filed prior to the occurrence of the time limit which is the subject of the petition.

§ 511.16 Service.

(a) *Mandatory service.* Every document filed with the Executive Secretary shall be served upon all parties and participants to a proceeding, i.e., Complaint Counsel, respondent(s), and participants, and upon the Presiding Officer.

(b) *Service of complaint, ruling, order, decision, or subpena.* Service of a complaint, ruling, order, decision, or subpena may be effected as follows:

(1) *By registered or certified mail.* A copy of the document shall be addressed to the person, partnership, corporation or unincorporated association to be served at his or its residence or principal office or place of business; registered or certified; and mailed; or

(2) *By delivery to an individual.* A copy of the document may be delivered to the person to be served; or to a member of the partnership to be served; or to the president, secretary, or other executive officer, or a director of the corporation or unincorporated association to be served; or to an agent authorized by appointment or by law to receive service; or

(3) *By delivery to an address.* A copy of the document may be left at the principal office or place of business of the person, partnership, corporation, unincorporated association, or authorized agent with an officer, a managing or general agent; or it may be left with a person of suitable age and discretion residing therein, at the residence of the person or of a member of the partnership or of an executive officer, director, or agent of the corporation or unincorporated association to be served.

(c) *Service of documents with prescribed response periods.* When service of a document starts the running of a prescribed period of time for the submission of a responsive document or the occurrence of an event, the document shall be served as provided in paragraph (b) of this section.

(d) *Service of other documents.* All documents other than those specified in paragraph (c) of this section may be served as provided in paragraph (b) of this section, or by ordinary first-class mail, properly addressed, postage prepaid.

(e) *Service on a representative.* When a party has appeared by an attorney or other representative, service upon that attorney or other representative shall constitute service on the party.

(f) *Certificate of service.* The original of every document filed with the agency and required to be served upon all parties to a proceeding shall be accompanied by a certificate of service signed by the party making service, stating that such service has been made upon each party to the proceeding. Certificates of service may be in substantially the following form:

I hereby certify that I have this day served the foregoing document upon all parties of record in this proceeding by mailing, postage prepaid (or by delivering in person) a copy to each such party.

Dated at _____ this ____ day of _____, 19____.

(Signature) _____

For _____

(g) *Date of Service.* The date of service of a document shall be the date on which the document is deposited in the United States mail or is delivered in person.

§ 511.17 Public participation.

Participant Status. Any person interested in a proceeding commenced pursuant to § 511.11 who desires to participate in the proceeding, shall file with the Executive Secretary a notice of intention to participate in the proceeding and shall serve a copy of such notice on each party to the proceeding. A notice of intention to participate shall be filed not later than the commencement of the hearing. Untimely filings will not be accepted absent a determination by the Presiding Officer that the person making the request has made a substantial showing of good cause for failure to file on time. Any person who files a notice to participate in the proceeding as a nonparty shall be known as a "participant" and shall have the rights specified in § 511.41(d).

§ 511.18 Joinder of proceedings.

Two or more matters which have been scheduled for adjudicative proceedings, and which involve one or more common questions of law or fact, may be consolidated for the purpose of hearing, appeal or the Administrator's review. A motion for consolidation for the purpose of hearing may be filed with the Presiding Officer by any party to such proceedings not later than thirty (30) days prior to the hearing. A motion for

consolidation for the purpose of appeal may be filed by any party to such proceedings within 10 days after issuance of the Initial Decision. A motion to consolidate shall be served upon all parties to all proceedings whose joinder is contemplated. The proceedings may be consolidated where to do so would tend to avoid unnecessary costs or delay. Such consolidation may also be ordered upon the initiative of the Presiding Officer or the Administrator, as appropriate. The Presiding Officer may order separate hearings on any issue where to do so would promote economy or convenience or would avoid prejudice to a party.

Subpart C—Prehearing Procedures; Motions; Interlocutory Appeals; Summary Judgment; Settlement

§ 511.21 Prehearing conferences.

(a) *When held.* (1) A prehearing conference shall be held in person or by conference telephone call, except in unusual circumstances, approximately fifty (50) days after publication in the Federal Register of the complaint, upon ten (10) days notice to all parties and participants, to consider any or all the following:

(i) Motions for consolidation of proceedings;

(ii) Identification, simplification and clarification of the issues;

(iii) Necessity or desirability of amending the pleadings;

(iv) Stipulations and admissions of fact and of the content and authenticity of documents;

(v) Oppositions to notices of oral examination;

(vi) Motions for protective orders to limit or modify discovery;

(vii) Issuance of subpenas to compel the appearance of witnesses and the production of documents;

(viii) Limitation of the number of witnesses, particularly the avoidance of duplicate expert witnesses;

(ix) Matters of which official notice will be taken and matters which may be resolved by reliance upon findings of other Federal agencies; and

(x) Other matters which may expedite the conduct of the hearing.

§ 511.22 Prehearing briefs.

Not later ten (10) days prior to the hearing, the parties shall, except when ordered otherwise by the Presiding Officer in unusual circumstances, simultaneously serve and file prehearing briefs, which shall set forth (a) a statement of the facts expected to be proved, and of the anticipated order of proof; (b) a statement of the issues and the legal argument in support of the party's contentions with respect to each issue; and (c) a table of authorities with a designation by asterisk of the principal authorities relied upon.

§ 511.23 Motions.

(a) *Presentations and dispositions.* During the time a proceeding is before a Presiding Officer, all motions, whether oral or written, except those filed under § 511.42(e), shall be addressed to the Presiding Officer, who shall rule upon them promptly after affording an opportunity for response.

(b) *Written motions.* All written motions shall state the particular order, ruling, or action desired and the grounds therefor. If a motion is supported by memoranda, affidavits or other documents, they shall be served and filed with the motion. All motions shall contain a proposed order setting forth the relief sought. All written motions shall be filed with the Executive Secretary and served on all parties, and all motions addressed to the Administrator shall be in writing.

(c) *Responses.* Within ten (10) days after service of any written motion or petition or within such longer or shorter time as may be designated by these Rules or by the Presiding Officer or the Administrator, the opposing party or parties shall file a written response to such motion. Where a motion would affect only a single party, or an identifiable group of parties, the Presiding Officer or Administrator may limit the response to the motion to the affected party or parties. Failure to respond to a written motion may, in the discretion of the Presiding Officer be deemed as consent to the granting of the relief sought in the motion. The moving party shall have no right to reply, except as permitted by the Presiding Officer or the Administrator.

(d) *Rulings on motions for dismissal.* When a motion to dismiss a complaint or motion for other relief is granted with the result that the proceeding before the Presiding Officer is terminated, the Presiding Officer shall issue an Initial Decision and Order thereon in accordance with the provisions of § 511.51. If such a motion is granted as to all issues alleged in the complaint in regard to some, but not all, the respondents, or is granted as to any part of the allegations in regard to any or all the respondents, the Presiding Officer shall enter an order on the record and consider the remaining issues in the Initial Decision. The Presiding Officer may elect to defer ruling on a motion to dismiss until the close of the case.

§ 511.24 Interlocutory appeals.

(a) *General.* Rulings of the Presiding Officer may not be appealed to the Administrator prior to the Initial Decision, except as provided herein.

(b) *Exceptions*—(1) *Interlocutory appeals to Administrator.* The Administrator may, in his or her discretion, entertain interlocutory appeals where a ruling of the Presiding Officer:

(i) Requires the production or disclosure of records claimed to be confidential;

(ii) Requires the testimony of a supervisory official of the agency other than one especially cognizant of the facts of the matter in adjudication;

(iii) Excludes an attorney from participation in a proceeding pursuant to § 511.42(b).

(2) *Procedures for interlocutory appeals.* Within ten (10) days of issuance of a ruling, any party may petition the Administrator to entertain an interlocutory appeal on a ruling in the categories enumerated above. The petition shall not exceed fifteen (15) pages. Any other party may file a response to the petition within ten (10) days of its service. The response shall not exceed fifteen (15) pages. The Administrator shall thereupon act upon the petition, or the Administrator shall request such further briefing or oral presentation as he may deem necessary.

(3) *Interlocutory appeals from all other rulings*—(i) *Grounds.* Interlocutory appeals from all other rulings by the Presiding Officer may proceed only upon motion to the Presiding Officer and a determination by the Presiding Officer in writing, with justification in support thereof, that the ruling involves a controlling question of law or policy as to which there is substantial ground for differences of opinion and that an immediate appeal from the ruling may materially advance the ultimate termination of the litigation, or that subsequent review will be an inadequate remedy.

(ii) *Form.* If the Presiding Officer determines, in accordance with paragraph (b)(3)(i) of this section that an interlocutory appeal may proceed a petition for interlocutory appeal may be filed with and acted upon by the Administrator in accordance with paragraph (b)(2) of this section.

(c) *Proceedings not stayed.* A petition for interlocutory appeal under this part shall not stay the proceedings before the Presiding Officer unless the Presiding Officer shall so order, except that a ruling of the Presiding Officer requiring the production of records claimed to be confidential shall be automatically stayed for a period of (10) days

following the issuance of such ruling to allow an affected party the opportunity to file a petition for an interlocutory appeal pursuant to § 511.24(b)(2). The filing of such a petition shall automatically extend the stay of such a ruling pending the Administrator's action on such petition.

§ 511.25 Summary decision and order.

(a) *Motion.* Any party may move, with a supporting memorandum, for a Summary Decision and Order in its favor upon all or any of the issues in controversy. Complaint Counsel may so move at any time after thirty (30) days following issuance of a complaint, and any other party may so move at any time after issuance of a complaint. Any such motion by any party shall be filed at least twenty (20) days before the date fixed for the adjudicatory hearing.

(b) *Response to motion.* Any other party may, within ten (10) days after service of the motion, file a response thereto with a supporting memorandum.

(c) *Grounds.* A Summary Decision and Order shall be granted if the pleadings and any testimony upon oral examination, answers to interrogatories, admissions, and/or affidavits show that there is no genuine issue as to any material fact and that the moving party is entitled to a Summary Decision and Order as a matter of law.

(d) *Legal effect.* A Summary Decision and Order upon all the issues being adjudicated shall constitute the Initial Decision of the Presiding Officer, and may be appealed to the Administrator in accordance with § 511.53. A Summary Decision, interlocutory in character, may be rendered on fewer than all issues and may not be appealed prior to issuance of the Initial Decision, except in accordance with §511.24.

(e) *Case not fully adjudicated on motion.* A Summary Decision and Order that does not dispose of the whole case shall include a statement of those material facts as to which there is no substantial controversy, and of those material facts that are actually and in good faith controverted. The Summary Order shall direct such further proceedings as are just.

§ 511.26 Settlement.

(a) *Applicability.* This section applies only to cases of alleged violations of section 507(3) of the Motor Vehicle Information and Cost Savings Act, Pub. L. 94-163, 89 Stat. 911 (15 U.S.C. Section 2007(3)). Settlement in other cases may be made only in accordance with Subpart G of this part.

(b) *Availability.* Any party shall have the opportunity to submit an offer of settlement to the Presiding Officer.

(c) *Form.* Offers of settlement shall be in the form of a consent agreement and order, shall be signed by the party submitting the offer or his representative, and may be signed by any other party. Each offer of settlement shall be accompanied by a motion to transmit to the Administrator the proposed agreement and order, outlining the substantive provisions of the agreement, and the reasons why it should be accepted.

(d) *Contents.* The proposed consent agreement and order which constitute the offer of settlement shall be contain the following:

(1) An admission of all jurisdictional facts;

(2) An express waiver of further procedural steps, and of all rights to seek judicial review or otherwise to contest the validity of the order;

(3) A description of the alleged noncompliance, or violation;

(4) Provisions to the effect that the allegations of the complaint are resolved by the proposed consent agreement and order;

(5) A listing of the acts or practices from which the respondent shall refrain;

(6) A detailed statement of the corrective action(s) which the respondent shall excute and the civil penalty, if any, that respondent shall pay.

(e) *Transmittal.* The Presiding Officer shall transmit to the Administrator for decision all offers of settlement and accompanying memoranda that meet the requirements enumerated in paragraph (d) of this section. The Presiding Officer may, but need not, recommend acceptance or rejection of such offers. Any party or participant, may object to a proposed consent agreement by filing a motion and supporting memorandum with the Administrator.

(f) *Stay of proceedings.* When an offer of settlement has been agreed to by the parties and has been transmitted to the Administrator, the proceedings shall be stayed until the Administrator has ruled on the offer. When an offer of settlement has been made and transmitted to the Administrator but has not been agreed to by all parties, the proceedings shall not be stayed pending the Administrator's decision on the offer.

(g) *Administrator's ruling.* The Administrator will rule upon all transmitted offers of settlement. If the Administrator accepts the offer, the Administrator shall issue an appropriate order. The order shall become effective upon issuance. In determining whether to accept an offer of settlement, the Administrator will consider the gravity of the alleged violation, and any good faith efforts by the respondent to comply with applicable requirements.

(h) *Rejection.* If the Administrator rejects an offer of settlement, the Executive Secretary shall give written notice of that decision and the reasons therefor to the parties and the Presiding Officer. Promptly thereafter, the Presiding Officer shall issue an order notifying the parties of the resumption of the proceedings, including any modifications to the schedule resulting from the stay of the proceedings.

(i) *Effect of rejected offer.* Rejected offers of settlement shall not be admissible in evidence over the objection of any signatory, nor shall the fact of the proposal of the offer be admissible in evidence.

Subpart D—Discovery; Compulsory Process

§ 511.31 General provisions governing discovery.

(a) *Applicabilty.* The discovery rules established in this subpart are applicable to the discovery of information among the parties to a proceeding. Parties seeking information from persons not parties may do so by subpena in accordance with § 511.38.

(b) *Discovery methods.* Parties may obtain discovery by one or more of the following methods: (1) Written interrogatories; (2) requests for production of documents or things; (3) requests for admissions; or (4) testimony upon oral examination. Unless the Presiding Officer otherwise orders under paragraph (d) of this section, the frequency of use of these methods is not limited.

(c) *Scope of discovery.* The scope of discovery is as follows:

(1) *In general.* Parties may obtain discovery regarding any matter not privileged, which is relevant to the subject matter involved in the proceedings, whether it relates to the claim or defense of the party seeking discovery or to the claim or defense of any other party. It is not ground for objection that the information sought will be inadmissible at the hearing if the information sought appears reasonably calculated to lead to the discovery of admissible evidence.

(2) *Exception.* Parties may not obtain discovery of documents which accompanied the staff's recommendation as to whether a complaint should issue or of documents or portions thereof which would be exempt from discovery under Rule 26(b)(3) of the Federal Rules of Civil Procedure.

(3) *Hearing preparation: Experts.* A party may obtain discovery of facts

known and opinions held by experts, regardless of whether they are acquired or developed in anticipation of or for litigation. Such discovery may be had by any of the methods provided in paragraph (b) of this section.

(d) *Protective orders.* Upon motion by a party or person and for good cause shown, the Presiding Officer may make any order which justice requires to protect such party or person from annoyance, embarrassment, competitive disadvantage, oppression or undue burden or expense, including one or more of the following: (1) That the discovery shall not be had; (2) that the discovery may be had only on specified terms and conditions, including a designation of the time and/or place; (3) that the discovery shall be had only by a method of discovery other than that selected by the party seeking discovery; (4) that certain matters shall not be inquired into, or that the scope of discovery shall be limited to certain matters; (5) that discovery shall be conducted with no one present except persons designated by the Presiding Officer; (6) that a trade secret or other confidential research, development, or commercial information shall not be disclosed or shall be disclosed only in a designated way or only to designated parties; and (7) that responses to discovery shall be placed *in camera* in accordance with § 511.45.

If a motion for a protective order is denied in whole or in part, the Presiding Officer may, on such terms or conditions as are just, order that any party provide or permit discovery.

(e) *Sequence and timing of discovery.* Discovery may commence at any time after filing of the answer. Unless otherwise provided in these Rules or by order of the Presiding Officer, methods of discovery may be used in any sequence and the fact that a party is conducting discovery shall not operate to delay any other party's discovery.

(f) *Supplementation of responses.* A party who has responded to a request for discovery shall supplement the response with information thereafter acquired.

(g) *Completion of discovery.* All discovery shall be completed as soon as practical but in no case longer than one hundreds fifty (150) days after issuance of a complaint unless otherwise ordered by the Presiding Officer in exceptional circumstances and for good cause shown. All discovery shall be served by a date which affords the party from whom discovery is sought the full response period provided by these Rules.

(h) *Service and filing of discovery.* All discovery requests and written responses, and all notices of the taking of testimony, shall be filed with the Executive Secretary and served on all parties and the Presiding Officer.

(i) *Control of discovery.* The use of these discovery procedures is subject to the control of the Presiding Officer, who may issue any just and appropriate order for the purpose of ensuring their timely completion.

§ 511.32 Written interrogatories to parties.

(a) *Availability; procedures for use.* Any party may serve upon any other party written interrogatories to be answered by the party served or, if the party served is a public or private corporation or a partnership or association or governmental agency, by any officer or agent, who shall furnish such information as is available to the party. Interrogatories may, without leave of the Presiding Officer, be served upon any party after filing of the answer.

(b) *Procedures for response.* Each interrogatory shall be answered separately and fully in writing under oath, unless it is objected to, in which event the reasons for objection shall be stated in lieu of an answer. The answers are to be signed by a responsible representative of the respondent and the objections signed by the respresentative making them. The party upon whom the interrogatories have been served shall serve a copy of the answers, and objections if any, within 30 days after service of the interrogatories. The Presiding Officer may allow a shorter or longer time for response. The party submitting the interrogatories may move for an order under § 511.36 with respect to any objection to or other failure to answer an interrogatory.

(c) *Scope of interrogatories.* Interrogatories may relate to any matters which can be inquired into under § 511.31(c)(1), and the answers may be used to the extent permitted under this part. An interrogatory otherwise proper is not objectionable merely because an answer to the interrogatory would involve an opinion or contention that relates to fact or to the application of law to fact, but the Presiding Officer may order that such an interrogatory need not be answered until a later time.

(d) *Option to produce business records.* Where the answer to an interrogatory may be derived or ascertained from the business records of the party upon whom the interrogatory has been served, or from an examination, audit or inspection of such business records, or from a compilation, abstract or summary based thereon, and the burden of deriving the answer is substantially the same for the party serving the interrogatory as for the party served, it is a sufficient answer to the interrogatory to specify the records from which the answer may be derived or ascertained and to afford to the party serving the interrogatory reasonable opportunity to examine, audit or inspect such records and to make copies, complications, abstracts, or summaries.

§ 511.33 Production of documents and things.

(a) *Scope.* Any party may serve upon any other party a request (1) to produce and permit the party making the request, or someone acting on behalf of that party, to inspect and copy any designated documents (including writings, drawings, graphs, charts, photographs, phono-records, and any other data-compilation from which information can be obtained, translated, if necessary, by the party in possession into reasonably usable form), or (2) to inspect and copy, test or sample tangible things which constitute or contain matters within the scope of § 511.31(c)(1) and which are in the possession, custody or control of the party upon whom the request is served.

(b) *Procedure for request.* The request may be served at any time after the filing of the answer without leave of the Presiding Officer. The request shall set forth the items to be inspected either by individual item or by category, and shall describe each item or category with reasonable particularity. The request shall specify a reasonable time, place and manner for making the inspection and performing the related acts.

(c) *Procedure for response.* The party upon whom the request is served shall serve a written response within twenty (20) days after service of the request. The Presiding Officer may allow a shorter or longer time for response. The response shall state, with respect to each item or category requested, that inspection and related activities will be permitted as requested, unless the request is objected to, in which event the reasons for objection shall be stated. If objection is made to only part of an item or category, that part shall be so specified. The party submitting the request may move for an order under § 511.36 with respect to any objection to or other failure to respond to the request or any part thereof, or to any failure to permit inspection as requested.

§ 511.34 Requests for admission.

(a) *Procedure for request.* A party may serve upon any other party a written request for the admission, for the

purposes of the pending proceeding only, of the truth of any matters within the scope of § 511.31(c)(1) set forth in the request that relate to statements or opinions of fact or if the application of law to fact, including the genuineness of documents described in the request. Copies of documents shall be served with the request unless they have been, or are otherwise, furnished or made available for inspection and copying. The request may, without leave of the Presiding Officer, be served upon any party after filing of the answer. Each matter as to which an admission is requested shall be separately set forth.

(b) *Procedure for response.* The matter as to which an admission is requested is deemed admitted unless within thirty (30) days after service of the request, or within such shorter or longer time as the Presiding Officer may allow, the party to whom the request is directed serves upon the party requesting the admission a written answer or objection addressed to the matter, signed by the party or the party's representatives. If objection is made, the reasons therefore shall be stated.

The answer shall specifically admit or deny the matter or set forth in detail the reasons why the answering party cannot truthfully admit or deny the matter. A denial shall fairly meet the substance of the requested admission. When good faith requires that a party qualify an answer or deny only a part of the matter as to which an admission is requested, the party shall specify the portion that is true and qualify or deny the remainder. An answering party may not give lack of information or knowledge as a reason for failure to admit or deny, unless the party states that he or she has made reasonable inquiry and that the information known or readily available to him or her is insufficient to enable him or her to admit or deny. A party who considers that a matter as to which an admission has been requested presents a genuine issue for hearing may not, on that ground alone, object to the request but may deny the matter or set forth reasons why the party cannot admit or deny it. The party who has requested an admission may move to determine the sufficiency of the answer or objection thereto in accordance with § 511.36. If the Presiding Officer determines that an answer does not comply with the requirements of this section, he or she may order that the matter be deemed admitted or that an amended answer be served.

(c) *Effect of admission.* Any matter admitted under this section is conclusively established unless the Presiding Officer on motion permits withdrawal or amendment of such admission. The Presiding Officer may permit withdrawal or amendment when the presentation of the merits of the action will be served thereby and the party that obtained the admission fails to satisfy the Presiding Officer that withdrawal or amendment will prejudice that party in maintaining an action or defense on the merits.

§ 511.35 Testimony upon oral examination.

(a) *When testimony may be taken.* At any time after the answer is filed under § 511.12, upon leave of the Presiding Officer and under such terms and conditions as the Presiding Officer may prescribe, any party may take the testimony of any other party, including the agents, employees, consultants or prospective witnesses of that party at a place convenient to the witness. The attendance of witnesses and the production of documents and things at the examination may be compelled by subpena as provided in § 511.38.

(b) *Notice of oral examination.*—(1) *Examination of a party.* A party desiring to examine another party to the proceeding shall, after obtaining leave from the Presiding Officer, serve written notice of the examination on all other parties and the Presiding Officer at least ten (10) days before the date of the examination. The notice shall state (i) the time and place for making the examination; (ii) the name and address of each person to be examined, if known, or if the name is not known, a general description sufficient to identify him; and (iii) the subject matter of the expected testimony. If a subpena *duces tecum* is to be served on the person to be examined, the designation of the materials to be produced, as set forth in the subpena, shall be attached to or included in the notice of examination.

(2) *Examination of a nonparty.* A party desiring to examine a person who is not a party to the proceeding shall make application for a subpena, in accordance with § 511.38, to compel the attendance, testimony and/or production of documents by such person who is not a party. The party desiring such examination shall serve written notice of the examination on all other parties to the proceeding, after issuance of the subpena by the Presiding Officer of a designated alternate.

(3) *Opposition to notice.* A person served with a notice of examination may, within 3 days of the date of service, oppose, in writing, the examination. The Presiding Officer shall rule on the notice and any opposition and may order the taking of all noticed examinations, upon a showing of good cause therefor. The Presiding Officer may, for good cause shown, enlarge or shorten the time for the taking of an examination.

(c) *Persons before whom examinations may be taken.* Examinations may be taken before any person authorized to administer oaths by the laws of the United States or of the place where the examination is held. No examination shall be taken before a person who is a relative or employee or attorney or representative of any party, or who is a relative or employee of such attorney or representative, or who is financially interested in the action.

(d) *Procedure.*—(1) *Examination.* Each witness shall be duly sworn, and all testimony shall be duly recorded. All parties or their representatives may be present and participate in the examination. Examination and cross-examination of witnesses may proceed as permitted at the hearing. Questions objected to shall be answered subject to the objections. Objections shall be in short form, and shall state the grounds relied upon. The questions propounded and the answers thereto, together with all objections made, shall be recorded by the official reporter before whom the examination is made. The original or a verified copy of all documents and things produced for inspection during the examination of the witness shall, upon a request of any party present, be marked for identification and annexed to the record of the examination.

(2) *Motion to terminate or limit examination.* At any time during the examination, upon motion of any party or of the witness, and upon showing that the examination is being conducted in bad faith or in such manner as unreasonably to annoy, embarrass or oppress the witness or party, the Presiding Officer may, upon motion, order the party conducting the examination to terminate the examination, or may limit the scope and manner of the examination as provided in § 511.31(d).

(3) *Participation by parties not present.* In lieu of attending an examination, any party may serve written questions in a sealed envelope on the party conducting the examination. That party shall transmit the envelope to the official reporter, who shall unseal it and propound the questions contained therein to the witness.

(e) *Transcription and filing of testimony.*—(1) *Transcription.* Upon request by any party, the testimony recorded at an examination shall be transcribed. When the testimony is fully transcribed, the transcript shall be submitted to the witness for

examination and signing, and shall be read to or by the witness, unless such examination and signature are waived by the witness. Any change in form or substance which the witness desires to make shall be entered upon the transcript of the official reporter with a statement of the reasons given by the witness for making them. The transcript shall then be signed by the witness, unless the parties by stipulation waive the signing, or the witness is ill or cannot be found or refuses to sign. If the transcript is not signed by the witness within thirty (30) days of its submission to him, the official reporter shall sign it and state on the record the fact of the waiver of signature or of the illness or absence of the witness or the fact of the refusal to sign, together with a statement of the reasons therefor. The testimony may then be used as fully as though signed, in accordance with paragraph (i) of this section.

(2) *Certification and filing.* The official reporter shall certify on the transcript that the witness was duly sworn and that the transcript is a true record of the testimony given and corrections made by the witness. The official reporter shall then seal the transcript in an envelope endorsed with the title and docket number of the action and marked "Testimony of [name of witness]" and shall promptly file the transcript with the Executive Secretary. The Executive Secretary shall notify all parties of the filing of the transcript and shall furnish a copy of the transcript to any party or to the witness upon payment of reasonable charges therefor.

(f) *Costs of examination.* The party who notices the examination shall pay for the examination. The party who requests transcription of the examination shall pay for the transcription.

(g) *Failure to attend or to serve subpena; expenses.* If a party who notices an examination fails to attend and proceed therewith and another party attends in person or by a representative pursuant to the notice, the Presiding Officer may order the party who gave the notice to pay the attending party the reasonable expenses incurred. If a party who notices an examination fails to serve a subpena upon the witness and as a result the witness does not attend, and if another party attends in person or by a representative because that party expects the examination to be made, the Presiding Officer may order the party who gave notice to pay the attending party the reasonable expenses incurred.

(h) *Examination to preserve testimony*—(1) *When available.* By leave of the Presiding Officer, a party may examine a witness for the purpose of perpetuating the testimony of that witness. A party who wishes to conduct such an examination shall obtain prior leave of the Presiding Officer by filing a motion. The motion shall include a showing of substantial reason to believe that the testimony could not be presented at the hearing. If the Presiding Officer is satisfied that the perpetuation of the testimony may prevent a failure of justice or is otherwise reasonably necessary, he or she shall order that the deposition be taken.

(2) *Procedure.* Notice of an examination to preserve testimony shall be served at least fifteen (15) days prior to the examination. The examination shall be taken in accordance with the provisions of paragraph (d) of this section. Any examination taken to preserve testimony shall be fully transcribed and filed in accordance with paragraph (e) of this section.

(i) *Use of testimony obtained under this section.* At the hearing or upon a motion or an interlocutory proceeding, any part or all of a deposition, so far as admissible under the rules of evidence applied as though the witness were then present and testifying, may be used against any party who was present or represented at the taking of the deposition or who had reasonable Notice thereof, in accordance with any of the following provisions:

(1) Any deposition may be used by any party for the purpose of contradicting or impeaching the testimony of deponent as a witness.

(2) The deposition of a party or of a person who at the time of the taking of his testimony was an officer, director or managing agent of a party may be used against that party for any purpose.

(3) The deposition of a witness, whether or not a party, may be used by any party for any purpose if the Presiding Officer finds: (i) that the witness is dead; or (ii) that the witness is at a greater distance than 100 miles from the place or the hearing, or is out of the United States, unless it appears that the absence of the witness was procured by the party offering the deposition; or (iii) that the witness is unable to attend or testify because of age, illness, infirmity, or imprisonment; or (iv) that the party offering the deposition has been unable to procure the attendance of the witness by subpoena; or (v) upon application and notice, that such exceptional circumstances exist as to make it desirable, in the interest of justice and with due regard to the importance of presenting the testimony of witnesses orally in open court, to allow the deposition to be used.

(4) If only part of a deposition is offered in evidence by a party, an adverse party may require him to introduce any other part which ought in fairness to be considered with the part introduced, and any party may introduce any other parts.

§ 511.36 Motions to compel discovery.

If a party fails to respond to discovery, in whole or in part, the party seeking discovery may move within twenty (20) days for an order compelling an answer, or compelling inspection or production of documents, or otherwise compelling discovery. For purposes of this subsection, an evasive or incomplete response is to be treated as a failure to respond. If the motion is granted, the Presiding Officer shall issue an order compelling discovery. If the motion is denied in whole or in part, the Presiding Officer may make such protective order as it would have been empowered to make on a motion pursuant to § 511.31(d). When making oral examinations, the discovering party shall continue the examination to the extent possible with respect to other areas of inquiry before moving to compel discovery.

§ 511.37 Sanctions for failure to comply with order.

If a party fails to obey an order to provide or permit discovery, the Presiding Officer may take such action as is just, including but not limited to the following:

(a) Infer that the admission, testimony, document of other evidence would have been adverse to the party;

(b) Order that for the purposes of the proceeding, the matters regarding which the order was made or any other designated facts shall be taken to be established in accordance with the claim of the party obtaining the order;

(c) Order that the party withholding discovery not introduce into evidence or otherwise rely, in support of any claim or defense, upon the documents or other evidence withheld;

(d) Order that the party withholding discovery not introduce into evidence or otherwise use at the hearing, information obtained in discovery;

(e) Order that the party withholding discovery not be heard to object to introduction and use of secondary evidence to show what the withheld admission, testimony documents, or other evidence would have shown;

(f) Order that a pleading, or part of a pleading, or a motion or other submission by the party, concerning which the order was issued, be stricken, or that decision on the pleadings be rendered against the party, or both; and

(g) Exclude the party or representative from proceedings, in accordance with § 511.42(b).

Any such action may be taken by order at any point in the proceedings.

§ 511.38 Subpenas.

(a) *Availability.* A subpena shall be addressed to any party or any person not a party for the purpose of compelling attendance, testimony and production of documents at a hearing or oral examination.

(b) *Form.* A subpena shall identify the action with which it is connected; shall specify the person to whom it is addressed and the date; time and place for compliance with its provisions; and shall be issued by order of the Presiding Officer and signed by the Executive Secretary or by the Presiding Officer. A subpena *duces tecum* shall specify the books, papers. documents, or other materials or data-compilations to be produced.

(c) *How obtained*—(1) *Content of application.* An application for the issuance of a subpena stating reasons shall be submitted in triplicate to the Presiding Officer.

(2) *Procedure of application.* The original and two copies of the subpena, marked "original," "duplicate" and "triplicate," shall accompany the application. The Presiding Officer shall rule upon an application for a subpena *ex parte,* by issuing the subpena or by issuing an order denying the application.

(d) *Issuance of a subpena.* The Presiding Officer shall issue a subpena by signing and dating, or ordering the Executive Secretary to sign and date, each copy in the lower right-hand corner of the document. The "duplicate" and "triplicate" copies of the subpena shall be transmitted to the applicant for service in accordance with these Rules; the "original" copy shall be retained by or be forwarded to the Executive Secertary for retention in the docket of the proceeding.

(e) *Service of a subpena.* A subpena may be served in person or by certified mail, return receipt requested, as provided in § 511.16(b). Service shall be made by delivery of the signed "duplicate" copy to the person named therein.

(f) *Return of service.* A person serving a subpena shall prompty execute a return of service, stating the date, time, and manner of service. If service is effected by mail, the signed return receipt shall accompany the return of service. In case of failure to make service, a statement of the reasons for the failure shall be made. The "triplicate" of the subpena, bearing or accompanied by the return of service, shall be returned forthwith to the Executive Secretary after service has been completed.

(g) *Motion to quash or limit subpena.* Within five (5) days of receipt of a subpena, the person against whom it is directed may file with the Presiding Officer a motion to quash, modify, or limit the subpena, setting forth the reasons why the subpena should be withdrawn or why it should be modified or limited in scope. Any such motion shall be answered within five (5) days of service, and shall be ruled on immediately thereafter. The order shall specify the date, if any, for compliance with the specifications of the subpena and the reasons for the decision.

(h) *Consequences of failure to comply.* In the event of failure to comply with a subpena, the Presiding Officer may take any of the actions enumerated in § 511.37 or may order any other appropriate relief to compensate for the withheld testimony, documents, or other materials. If in the opinon of the Presiding Officer such relief is insufficient, the Presiding Officer shall certify to the Administrator a request for judicial enforcement of the subpena.

§ 511.39 Orders requiring witnesses to testify or provide other information and granting immunity.

(a) A party who desires the issuance of an order requiring a witness to testify or provide other information upon being granted immunity from prosecution under title 18, United States Code, section 6002, may make a motion to that effect. The motion shall be made and ruled on in accordance with § 511.22, and shall include a showing:

(1) That the testimony or other information sought from a witness or prospective witness may be necessary to the public interest; and

(2) That such individual has refused or is likely to refuse to testify or provide such information on the basis of that individual's privilege against self-incrimination.

(b) If the Presiding Officer determines that the witness' testimony appears necessary and that the privilege against self-incrimination may be invoked, he or she may certify to the Administrator a request that he or she obtain the approval of the Attorney General of the United States for the issuance of an order granting immumity.

(c) Upon application to and approval of the Attorney General of the United States, and after the witness has invoked the privilege against self-incrimination, the Presiding Officer shall issue the order granting immunity unless he or she determines that the privilege was improperly invoked.

(d) Failure of a witness to testify after a grant of immunity or after a denial of the issuance of an order granting immunity shall result in the imposition of appropriate sanctions as provided in § 511.37.

Subpart E—Hearings

§ 511.41 General rules.

(a) *Public hearings.* All hearings pursuant to this Part shall be public unless otherwise ordered by the Presiding Officer. Notice of the time and location of the hearing shall be served on each party and participant, and published in the Federal Register.

(b) *Expedition.* Hearings shall proceed with all reasonable speed, and insofar as practicable and with due regard to the convenience of the parties and shall continue without suspension until concluded, except in unusual circumstances.

(c) *Rights of parties.* Every party shall have the right of timely notice and all other rights essential to a fair hearing, including, but not limited to, the rights to present evidence, to conduct such cross-examination as may be necessary in the judgment of the Presiding Officer for a full and complete disclosure of the facts, and to be heard by objection, motion, brief, and argument.

(d) *Rights of participants.* Every participant shall have the right to make a written or oral statement of position, file proposed findings of fact, conclusions of law and a posthearing brief, in accordance with § 511.17(b).

(e) *Rights of witnesses.* Any person compelled to testify in a proceeding in response to a subpena may be accompanied, represented, and advised by counsel or other representative, and may obtain a transcript of his or her testimony at no cost.

§ 511.42 Powers and duties of Presiding Officer.

(a) *General.* A Presiding Officer shall have the duty to conduct full, fair, and impartial hearings, to take appropriate action to avoid unnecessary delay in the disposition of proceedings, and to maintain order. He or she shall have all powers necessary to that end, including the following powers:

(1) To administer oaths and affirmations:

(2) To compel discovery and to impose appropriate sanctions for failure to make discovery;

(3) To issue subpenas;

(4) To rule upon offers of proof and receive relevant and probative evidence;

(5) To regulate the course of the hearings and the conduct of the parties and their representatives therein;

(6) To hold conferences for simplification of the issues, settlement of the proceedings, or any other proper purposes;

(7) To consider and rule, orally or in writing, upon all procedural and order motions appropriate in an adjudicative proceeding;

(8) To issue initial decisions, rulings, and orders, as appropriate;

(9) To certify questions to the Administrator for determination; and

(10) To take any action authorized in this Part or in conformance with the provisions of title 5, United States Code, sections 551 through 559.

(b) *Exclusion of parties by Presiding Officer.* A Presiding Officer shall have the authority, for good cause stated on the record, to exclude from participation in a proceeding any party, participant, and/or representative who shall violate requirements of § 511.76. Any party, participant and/or representative so excluded may appeal to the Administrator in accordance with the provisions of § 511.23. If the representative of a party or participant is excluded, the hearing shall be suspended for a reasonable time so that the party or participant may obtain another representative.

(c) *Substitution of Presiding Officer.* In the event of the substitution of a new Presiding Officer for the one originally designated, any motion predicated upon such substitution shall be made within five (5) days of the substitution.

(d) *Interference.* In the performance of adjudicative functions, a Presiding Officer shall not be responsible to or subject to the supervision or direction of the Administrator or of any officer, employee, or agent engaged in the preformance of investigative or prosecuting functions for NHTSA. All directions by the Administrator to a Presiding Officer concerning any adjudicative proceeding shall appear on and be made a part of the record.

(e) *Disqualification of Presiding Officer.* (1) When a Presiding Officer deems himself or herself disqualified to preside in a particular proceeding, he or she shall withdraw by notice on the record and shall notify the Director of the Office of Administrative Law Judges and the Executive Secretary of the withdrawal.

(2) Whenever, for any reason, any party shall deem the Presiding Officer to be disqualified to preside, or to continue to preside, in a particular proceeding, that party may file with the Executive Secretary a motion to disqualify and remove, supported by affidavit(s) setting forth the alleged grounds for disqualification. A copy of the motion and supporting affidavit(s) shall be served by the Executive Secretary on the Presiding Officer whose removal is sought. The Presiding Officer shall have ten (10) days from service to reply in writing. Such motion shall not stay the proceeding unless otherwise ordered by the Presiding Officer or the Administrator. If the Presiding Officer does not disqualify himself or herself, the Administrator will determine the validity of the grounds alleged, either directly or on the report of another Presiding Officer appointed to conduct a hearing for that purpose, and shall in the event of disqualification take appropriate action, by assigning another Presiding Officer or requesting loan of another Administrative Law Judge through the Office of Personnel Management

§ 511.43 Evidence.

(a) *Applicability of Federal Rules of Evidence.* The Federal Rules of Evidence shall apply to proceedings held under this part only as a general guide. The Presiding Officer may admit any relevent and probative evidence.

(b) *Burden of proof.* (1) Compliant counsel shall have the burden of sustaining the allegations of any complaint.

(2) Any party who is the proponent of a legal and/or factual proposition shall have the burden of sustaining the proposition.

(c) *Presumptions.* A presumption imposes on the party against whom it is directed the burden of going forward with evidence to rebut or meet the presumption, but does not shift to such party the burden of proof in the sense of the risk of nonpersuasion, which remains throughout the hearing upon the party on whom it was originally cast.

(d) *Admissibility.* All relevant and reliable evidence is admissible, but may be excluded if its probative value is substantially outweighed by unfair prejudice or by considerations of undue delay, waste of time, immateriality, or needless presentation of cumulative evidence.

(e) *Official notice*—(1) *Definition.* Official notice means use by the Presiding Officer of extra-record facts and legal conclusions drawn from those facts. An officially noticed fact or legal conclusion must be one not subject to reasonable dispute in that it is either (i) generally known within the jurisdiction of the Presiding Officer or (ii) known by the Presiding Officer in areas of his or her expertise; or (iii) capable of accurate and ready determination by resort to sources whose accuracy cannot reasonably be questioned.

(2) *Method of taking official notice.* The Presiding Officer may at any time take official notice upon motion of any party or upon its own initiative. The record shall reflect the facts and conclusions which have been officially noticed.

(3) *Opportunity to challenge.* Any party may upon application in writing rebut officially noticed facts and conclusions by supplementing the record. The Presiding Officer shall determine the permissible extent of this challenge; that is, whether to limit the party to presentation of written materials, whether to allow presentation of testimony, whether to allow cross-examination, or whether to allow oral argument. The Presiding Officer shall grant or deny the application on the record.

(f) *Objections and exceptions.* Objections to evidence shall be timely interposed, shall appear on the record, and shall contain the grounds upon which they are based. Rulings on all objections, and the bases therefore, shall appear on the record. Formal exception to an adverse ruling is not required to preserve the question for appeal.

(g) *Offer of proof.* When an objection to proffered testimony or documentary evidence is sustained, the sponsoring party may make a specific offer, either in writing or orally, of what the party expects to prove by the testimony or the document. When an offer of proof is made, any other party may make a specific offer, either in writing or orally, of what the party expects to present to rebut or contradict the offer of proof. Written offers of proof or of rebuttal, adequately marked for identification, shall accompany the record and be available for consideration by any reviewing authority.

§ 511.44 Expert witnesses.

(a) *Definition.* An expert witness is one who, by reason of education, training, experience, or profession, has peculiar knowlege concerning the matter of science or skill to which his or her testimony relates and from which he or she may draw inferences based upon hypothetically stated facts or from facts involving scientific or technical knowledge.

(b) *Method of presenting testimony of expert witness.* Except as may be otherwise ordered by the Presiding Officer, a detailed written statement of the elements of the direct testimony of an expert witness shall be filed on the record and exchanged between the parties no later than 10 days preceding the commencement of the hearing. The statement must contain a full explanation of the methodology underlying any analysis, and a full

disclosure of the basis of any opinion. The direct testimony of an expert witness shall not include points not contained in the written statement. A party may waive direct examination of an expert witness by indicating that the written statement be considered the testimony of the witness. In such a case, the written testimony shall be incorporated into the record and shall constitute the testimony of the witness.

(c) *Cross-examination and redirect examination of expert witness.* Cross-examination, redirect examination, and re-cross-examination of an expert witness will proceed in due course based upon the written testimony and any amplifying oral testimony.

(d) *Failure to file and/or to exchange written statement.* Failure to file and/or to exchange the written statement of an expert witness as provided in this section shall deprive the sponsoring party of the use of the expert witness and of the conclusions which that witness would have presented.

§ 511.45 In camera materials.

(a) *Definition. In camera* materials are documents, testimony, or other data which by order of the Presiding Officer or the Administrator, as appropriate under this Part, are kept confidential and excluded from the public record. Only materials exempt under the Freedom of Information Act may be kept confidential and excluded from the public record. Pursuant to 49 CFR Part 512, the Chief Counsel of the NHTSA is responsible for determining whether an alleged confidential business record is exempt from the Freedom of Information Act. The right of the Presiding Officer, the Administrator and reviewing courts to order disclosure of *in camera* materials is specifically reserved.

(b) In Camera *Treatment of documents and testimony.* The Presiding Officer or the Administrator, as appropriate under this part, shall have authority, when good cause is found on the record, to order documents or testimony offered in evidence, whether admitted or rejected, to be received and preserved *in camera.* The order shall specify the length of time for *in camera* treatment and shall include:

(1) A description of the documents and/or testimony;

(2) The reasons for granting *in camera* treatment for the specified length of time.

(c) *Access and disclosure to parties.* (1) The Administrator and Presiding Officer, and their immediate advisory staffs shall have complete access to all *in camera* materials. All other parties shall also have complete access to all *in camera* materials, except that these parties may seek access only in accordance with paragraph (c)(2) of this section when:

(i) The *in camera* materials consist of information obtained by the government from persons not parties to the proceeding; or

(ii) The *in camera* materials consist of information provided by one of the parties to the proceeding which is confidential as to the other parties to the proceeding.

(2) Any party desiring access to and/or disclosure of the *in camera* materials specified in paragraph (c)(1) (i) and (ii) of this section for the preparation and presentation of that party's case shall make a motion which sets forth the justification therefore. The Presiding Officer or the Administrator, as appropriate under this part, may grant such motion on the record for substantial good cause shown and shall enter a protective order prohibiting unnecessary disclosure and requiring other necessary safeguards. The Presiding Officer or the Administrator, as appropriate, may examine the *in camera* materials and excise portions thereof before disclosing the materials to the moving party.

(d) *Segregation of* in camera *materials. In camera* materials shall be segregated from the public record and protected from public view.

(e) *Public release of* in camera *materials. In Camera* materials constitute a part of the confidential records of the NHTSA and shall not be released to the public until the expiration of *in camera* treatment.

(f) *Reference to* in camera *materials.* In the submission of proposed findings, conclusions, briefs, or other documents, all parties shall refrain from disclosing specific details of *in camera* materials. Such refraining shall not preclude general references to such materials. To the extent that parties consider it necessary to include specific details of *in camera* materials, the references shall be incorporated into separate proposed findings, briefs, or other documents marked "CONFIDENTIAL, CONTAINS *IN CAMERA* MATERIAL," which shall be placed *in camera* and become part of the *in camera* record. These documents shall be served only on parties accorded access to the *in camera* materials in accordance with paragraph (c)(2) of this section.

§ 511.46 Proposed findings, conclusions, and order.

Within a reasonable time after the closing of the record and receipt of the transcript, all parties and participants may, simultaneously, file post-hearing briefs, including proposed findings of fact, conclusions of law and a proposed order, together with reasons therefore. The Presiding Officer shall establish a date certain for the filing of the briefs, which shall not exceed 45 days after the close of the record except in unusual circumstances. The briefs shall be in writing, shall be served upon all parties, and shall contain adequate references to the record and authorities relied on. Replies shall be filed within fifteen (15) days of the date for the filing of briefs unless otherwise established by the Presiding Officer. The parties and participants may waive either or both submissions.

§ 511.47 Record.

(a) *Reporting and transcription.* Hearings shall be recorded and transcribed under the supervision of the Presiding Officer by a reporter appointed by the Administrator. The original transcript shall be a part of the record and the official transcript. Copies of transcripts are available from the reporter at a cost not to exceed the maximum rates fixed by contract between the NHTSA and the reporter.

(b) *Corrections.* Corrections of the official transcript may be made only when they involve errors affecting substance and then only in the manner herein provided. The Presiding Officer may order corrections, either on his or her own motion or on motion of any party. The Presiding Officer shall determine the corrections to be made and so order. Corrections shall be interlineated or otherwise inserted in the official transcript so as not to obliterate the original text.

§ 511.48 Official docket.

(a) The official docket in adjudicatory proceedings will be maintained in the Docket Section, Room 5108, 400 Seventh Street S.W., Washington, D.C. and will be available for public inspection during normal working hours (7:45 a.m.–4:15 p.m.) Monday through Friday.

(b) Fees for production or disclosure of records contained in the official docket shall be levied as prescribed in the NHTSA's Procedures for Disclosure or Production of Information under the Freedom of Information Act.

§ 511.49 Fees.

(a) *Witnesses.* Any person compelled to appear in person in response to a subpena or notice of oral examination shall be paid at least the same attendance and mileage fees as are paid witnesses in the courts of the United States, in accordance with Title 28, United States Code, Section 1821.

(b) *Responsibility.* The fees and mileage referred to in this section shall

be paid by the party at whose instance witnesses appear.

Subpart F—Decision

§ 511.51 Initial decision.

(a) *When filed.* The Presiding Officer shall endeavor to file an Initial Decision with the Administrator within sixty (60) days of the close of the record, the filing of post-hearing briefs, or the filing of replies thereto, whichever is latest.

(b) *Content.* The Initial Decision shall be based upon a consideration of the entire record and it shall be supported by reliable, probative, and substantial evidence. It shall include:

(1) Findings and conclusions, as well as the reasons or bases therefore, upon the material questions of fact, material issues of law, or discretion presented on the record, and should, where practicable, be accompanied by specific page citations to the record and to legal and other materials relied upon.

(2) An appropriate order.

(c) *By whom made.* The Initial Decision shall be made and filed by the Presiding Officer who presided over the hearing, unless otherwise ordered by the Administrator.

(d) *Reopening of proceeding by presiding officer; termination of jurisdiction.* (1) At any time prior to or concomitant with the filing of the Initial Decision, the Presiding Officer may reopen the procedings for the reception of further evidence.

(2) Except for the correction of clerical errors, the jurisdiction of the Presiding Officer is terminated upon the filing of the Initial Decision, unless and until the proceeding is remanded to the Presiding Officer by the Administrator.

§ 511.52 Adoption of initial decision.

The Initial Decision and Order shall become the Final Decision and Order of the Administrator forty (40) days after issuance unless an appeal is noted and perfected or unless review is ordered by the Administrator. Upon the expiration of the fortieth day, the Executive Secretary shall prepare, sign and enter an order adopting the Initial Decision and Order.

§ 511.53 Appeal from initial decision.

(a) *Who may file notice of intention.* Any party may appeal an Initial Decision to the Administrator provided that within ten (10) days after issuance of the Initial Decision such party files and serves a notice of intention to appeal.

(b) *Appeal brief.* The appeal shall be in the form of a brief, filed within forty (40) days after service of the Initial Decision, duly served upon all parties and participants. The appeal brief shall contain, in the order indicated, the following:

(1) A subject index of the matters in the brief, with page references, and a table of cases (alphabetically arranged), textbooks, statutes, and other material cited, with page references thereto;

(2) A concise statement of the case;

(3) A specification of the position urged;

(4) The argument, presenting clearly the points of fact and law relied upon in support of the position on each question, with specific page references to the record and the legal or other material relied upon; and

(5) A proposed form of order for the Administrator's consideration in lieu of the order contained in the Initial Decision.

(c) *Answering brief.* Within thirty (30) days after service of the appeal brief upon all parties and participants, any party may file an answering brief which shall also contain a subject index, with page references, and a table of cases (alphabetically arranged), textbooks, statutes, and other material cited, with page references thereto. Such brief shall present clearly the points of fact and law relied upon in support of the position taken on each question, with specific page references to the record and legal or other material relied upon.

(d) *Participant's brief.* Within thirty (30) days after service of the appeal brief upon all parties and participants, any participant may file an appeal brief which should contain a subject index, with page references, and a table of authorities being relied upon. Such brief shall present clearly the position taken by the participant on each question raised by the appellant(s).

(e) *Cross appeal.* If a timely notice of appeal is filed by a party, any other party may file a notice of cross-appeal within ten (10) days of the date on which the first notice of appeal was filed. Cross-appeals shall be included in the answering brief and shall conform to the requirements for form, content and filing specified in paragraph (c) of this section. If an appeal is noticed but not perfected, no cross-appeal shall be permitted and the notice of cross-appeal shall be deemed void.

(f) *Reply brief.* A reply brief shall be limited to rebuttal of matters in answering briefs, including matters raised in cross-appeals. A reply brief shall be filed and within fourteen (14) days after service of an answering brief, or on the day preceding the oral argument, whichever comes first.

(g) *Oral argument.* The purpose of an oral argument is to emphasize and clarify the issues. Any party may request oral argument. The Administrator may order oral argument upon request or upon his or her own initiative. All oral arguments shall be reported and transcribed.

§ 511.54 Review of initial decision in absence of appeal.

The Administrator may, by order, review a case not otherwise appealed by a party. Thereupon the parties shall and participants may file briefs in accordance with § 511.53(b), (c), (d), (e), and (f) except that the Administrator may, in his or her discretion, establish a different briefing schedule in his or her order. Any such order shall issue within forty (40) days of issuance of the Initial Decision. The order shall set forth the issues which the Administrator will review.

§ 511.55 Final decision on appeal or review.

(a) Upon appeal from or review of an Initial Decision, the Administrator shall consider such parts of the record as are cited or as may be necessary to resolve the issues presented and, in addition, shall, to the extent necessary or desirable, exercise all the powers which it could have exercised if he or she had made the Initial Decision.

(b) In rendering his or her decision, the Administrator shall adopt, modify, or set aside the findings, conclusions, and order contained in the Initial Decision, and shall include in his or her Final Decision a statement of the reasons or bases for his or her action. The Administrator shall issue an order reflecting his or her Final Decision.

§ 511.56 Reconsideration.

Within twenty (20) days after issuance of a Final Decision and Order, any party may file with the Administrator a petition for reconsideration of such decision or order, setting forth the relief desired and the grounds in support thereof. Any party desiring to oppose such a petition shall file an answer thereto within ten (10) days after service of the petition. The filing of a petition for reconsideration shall not stay the effective date of the Decision and Order or toll the running of any statutory time period affecting the decision or order unless specifically so ordered by the Administrator.

§ 511.57 Effective date of order.

(a) *Consent orders.* An order which has been issued following acceptance of an offer of settlement in accordance with § 511.26 becomes effective upon issuance.

(b) *Litigated orders.* All other orders become effective upon the expiration of

the statutory period for court review specified in Section 508(c)(1) of the Motor Vehicle Information and Cost Savings Act, Title 15, United States Code Section 2008(c)(1), Pub. L. 94–163, 89 Stat. 911, or, if a petition for review has been filed, upon court affirmance of the Administrator's order.

Subpart G—Settlement Procedure in Cases of Violation of Average Fuel Economy Standards

§ 511.61 Purpose.

This subpart establishes the procedures and requirements necessary to obtain a settlement of a case of violation of section 507 (1) or (2) of the Motor Vehicle Information and Cost Savings Act, as amended, Pub. L. 94–163, 89 Stat. 911 (15 U.S.C. Section 2007(1)(2)). No settlement of such cases may be had except as in accordance with this subpart.

§ 511.62 Definitions.

"Average fuel economy standard" means an average fuel economy standard established by or pursuant to the Motor Vehicle Information and Cost Savings Act.

"Insolvency" means the inability to meet expenses when due.

"Settlement" means a compromise, modification, or remission of a civil penalty assessed under this Part for a violation of an average fuel economy standard.

§ 511.63 Criteria for settlement.

Settlement of a case of violation of an average fuel economy standard is discretionary with the Administrator. The Administrator will consider settlement only to the extent—

(a) Necessary to prevent the insolvency or bankruptcy of the person seeking settlement, or

(b) That the violation of the average fuel economy standard resulted, as shown by the person seeking settlement, from an act of God, a strike, or fire, or

(c) That modification of a civil penalty assessed under this part is necessary to prevent lessening of competition, as determined and as certified by the Federal Trade Commission under section 508(b)(4) of the Motor Vehicle Information and Cost Savings Act, Pub. L. 94–163, 89 Stat. 911 (15 U.S.C. sec. 2008(b)(4)).

§ 511.64 Petitions for settlement; timing, contents.

(a) A petition seeking settlement under this subpart must be filed within 30 days after the issuance of a final order assessing a civil penalty for a violation of an average fuel economy standard.

(b)(1) A petition for settlement should be sufficient to allow the Administrator to determine that at least one of the criteria set out in § 511.63 is satisfied, and that the public interest would be served by settlement.

(2) A petition asserting that settlement is necessary to prevent bankruptcy or insolvency must include:

(i) Copies of all pertinent financial records, auditors reports, and documents that show that the imposition of a civil penalty would cause insolvency, or would cause a company to do an act of bankruptcy, and

(ii) A payment schedule that would allow the petitioner to pay a civil penalty without resulting in insolvency or an act of bankruptcy.

(3) A petition asserting that the violation of the average fuel economy standard was caused by an act of God, fire, or strike must describe corrective and ameliorative steps taken to mitigate the effects of the act of God, fire, or strike.

(4) A petition based on a certification by the Federal Trade Commission that modification of the civil penalty assessed is necessary to prevent a substantial lessening of competition must include a certified copy of:

(i) The application to the Federal Trade Commission for a certification under section 508(b)(4) of the Motor Vehicle Information and Cost Savings Act, Pub. L. 94–163, 89 Stat. 911 (15 U.S.C. Sec. 2008(b)(4)), and materials supporting the application.

(ii) The administrative record of any Federal Trade Commission proceeding held in regard to the application, and

(iii) The certification by the Federal Trade Commission.

(c) It is the policy of the National Highway Traffic Safety Administration that unconditional settlements of violations of average fuel economy standards are not in the public interest, and absent special and extraordinary circumstances, will not be allowed. All petitions for settlement shall contain a section proposing conditions for settlement. Conditions for settlement can be specific acts designed to lead to the reduction of automotive fuel consumption, which the petitioner is not otherwise required to perform pursuant to any statute, regulation, or administrative or judicial order, such as sponsoring public education programs, advertising, accelerating commercial application of technology, accelerating technology development programs, or making public the results of privately performed studies, surveys, or research activities.

§ 511.65 Public comment.

Notice and opportunity for comment are provided to the public in regard to settlements under this part. Subject to § 511.66, notice of receipt of a petition for settlement is published in the Federal Register, and a copy of such petitions and any supporting information is placed in a public docket. Any settlement agreed to by the Administrator shall be placed in the public docket for 30 days so that interested persons may comment thereon. No settlement is binding until the completion of that thirty day period.

§ 511.66 Confidential business information.

The Administrator shall have authority to segregate from the public docket and to protect from public view information in support of a petition for settlement which has been determined to be confidential business information. The provisions of 15 U.S.C. 2005(d) pertaining to discretionary release by the Administrator of and to limited disclosure of information determined to be confidential business information shall apply to this section.

§ 511.67 Settlement order.

If, in accordance with this subpart, the Administrator allows a settlement of a case of violation of an average fuel economy standard, an order of settlement shall be issued, setting out the terms of the settlement, and containing a brief discussion of the factors underlying the exercise of the Administrator's discretion in allowing the settlement, including a discussion of comments received under § 511.65. If the Administrator rejects a petition for settlement, the Executive Secretary shall give written notice of the rejection and the reasons for the rejection to the parties and the Presiding Officer.

Subpart H—Appearances; Standards of Conduct

§ 511.71 Who may make appearances.

A party or participant may appear in person, or by a duly authorized officer, partner, regular employee, or other agent of this party or participant, or by or with counsel or other duly qualified representative, in any proceeding under the part.

§ 511.72 Authority for representation.

Any individual acting in a representative capacity in any adjudicative proceeding may be required by the Presiding Officer or the Administrator to show his or her authority to act in such capacity. A regular employee of a party who appears on behalf of the party shall be

required by the Presiding Officer or the Administrator to show his or her authority to so appear.

§ 511.73 Written appearances.

(a) Any person who appears in a proceeding shall file a written notice of appearance with the Executive Secretary or deliver a written notice of appearance to the reporter at the hearing, stating for whom the appearance is made and the name, address, and telephone number (including area code) of the person making the appearance and the date of the commencement of the appearance. The written appearance shall be made a part of the record.

(b) Any person who has previously appeared in a proceeding may withdraw his or her appearance by filing a written notice of withdrawal of appearance with the Executive Secretary. The notice of withdrawal of appearance shall state the name, address, and telephone number (including area code) of the person withdrawing the appearance, for whom the appearance was made, and the effective date of the withdrawal of the appearance, and such notice of withdrawal shall be filed within five (5) days of the effective date of the withdrawal of the appearance.

§ 511.74 Attorneys.

An attorney at law who is admitted to practice before the Federal courts or before the highest court of any State, the District of Columbia, or any territory or Commonwealth of the United States, may practice before the NHTSA. An attorney's own representation that he or she is in good standing before any of such courts shall be sufficient proof thereof, unless otherwise ordered by the Presiding Officer or the Administrator.

§ 511.75 Persons not attorneys.

(a) Any person who is not an attorney at law may be admitted to appear in an adjudicative proceeding if that person files proof to the satisfaction of the Presiding Officer that he or she possesses the necessary legal, technical, or other qualifications to render valuable service in the proceeding and is otherwise competent to advise and assist in the presentation of matters in the proceedings. An application by a person not an attorney at law for admission to appear in a proceeding shall be submitted in writing to the Executive Secretary, not later than thirty (30) days prior to the hearing in the proceedings. The application shall set forth in detail the applicant's qualifications to appear in the proceedings.

(b) No person who is not an attorney at law and whose application has not been approved shall be permitted to appear in the Administration's proceedings. However, this provision shall not apply to any person who appears before the NHTSA on his or her own behalf or on behalf of any corporation, partnership, or association of which the person is a partner, officer, or regular employee.

§ 511.76 Qualifications and standards of conduct.

(a) The NHTSA expects all persons appearing in proceedings before it to act with integrity, with respect, and in an ethical manner. Business transacted before and with the NHTSA shall be in good faith.

(b) To maintain orderly proceedings, the Presiding Officer or the Administrator, as appropriate under this part, may exclude parties, participants, and their representatives for refusal to comply with directions, continued use of dilatory tactics, refusal to adhere to reasonable standards of orderly and ethical conduct, failure to act in good faith, or violation of the prohibition against certain ex parte communications. The Presiding Officer may, in addition to the above sanctions, deny access to additional *in camera* materials when a party or participant publicly releases such materials without authorization.

(c) An excluded party, participant, or representative thereof may petition the Administrator to entertain an interlocutory appeal in accordance with § 511.24. If, after such appeal, the representative of a party or participant, is excluded, the hearing shall, at the request of the party or participant, be suspended for a reasonable time so that the party or participant may obtain another representative.

§ 511.77 Restrictions as to former members and employees.

The postemployee restrictions applicable to former Administrators and NHTSA employees, as set forth in 18 U.S.C. 207, shall govern the activities of former Administrators and NHTSA employees in matters connected with their former duties and responsibilities.

§ 511.78 Prohibited communications.

(a) *Applicability.* This section is applicable during the period commencing with the date of issuance of a complaint and ending upon final NHTSA action in the matter.

(b) *Definitions.* (1) "Decision-maker" means those NHTSA personnel who render decisions in adjudicative proceedings under this part, or who advise officials who render such decisions, including:

(i) The Administrator,

(ii) The Administrative Law Judges;

(2) "Ex parte communications" means:

(i) Any written communication other than a request for a status report on the proceeding made to a decisionmaker by any person other than a decisionmaker which is not served on all parties,

(ii) Any oral communication other than a request for a status report on the proceeding made to a decisionmaker by any person other than a decisionmaker without advance notice to the parties to the proceeding and opportunity for them to be present.

(c) *Prohibited ex parte communications.* Any oral or written ex parte communication relative to the merits of a proceeding under this part is a prohibited ex parte communication, except as provided in paragraph (d) of this section.

(d) *Permissible ex parte communications.* The following communications shall not be prohibited under this section:

(1) Ex parte communications authorized by statute or by this part.

(2) Any staff communication concerning judicial review or judicial enforcement in any matter pending before or decided by the Administrator.

(e) *Procedures for handing prohibited ex parte communication.* (1) Prohibited written ex parte communication. To the extent possible, a prohibited written ex parte communication received by any NHTSA employee shall be forwarded to the Executive Secretary rather than to a decisionmaker. A prohibited written ex parte communication which reaches a decisionmaker shall be forwarded by the decisionmaker to the Executive Secretary. If the circumstances in which a prohibited ex parte written communication was made are not apparent from the communication itself, a statement describing those circumstances shall be forwarded with the communication.

(2) Prohibited oral ex parte communication.

(i) If a prohibited oral ex parte communication is made to a decisionmaker, he or she shall advise the person making the communication that the communication is prohibited and shall terminate the discussion.

(ii) In the event of a prohibited oral ex parte communication, the decisionmaker shall forward to the Executive Secretary a dated statement containing such of the following information as is known to him/her:

(A) The title and docket number of the proceeding:

(B) The name and address of the person making the communication and his/her relationship (if any) to the parties to the proceeding;

(C) The date and time of the communication, its duration, and the circumstances (telephone call, personal interview, etc.) under which it was made;

(D) A brief statement of the substance of the matters discussed;

(E) Whether the person making the communication persisted in doing so after being advised that the communication was prohibited.

(3) *Filing.* All communications and statements forwarded to the Executive Secretary under this section shall be placed in a public file which shall be associated with, but not made a part of, the record of the proceedings, to which the communication or statement pertains.

(4) *Service on parties.* The Executive Secretary shall serve a copy of each communication and statement forwarded under this section on all parties to the proceedings. However, if the parties are numerous, or if other circumstances staisfy the Executive Secretary that service of the communication or statement would be unduly burdensome, he or she may, in lieu of service, notify all parties in writing that the communication or statement has been made and filed and that it is available for inspection and copying.

(5) *Service on maker.* The Executive Secretary shall forward to the person who made the prohibited ex parte communication a copy of each communication and/or statement filed under this section.

(f) *Effect of ex parte communications.* No prohibited ex parte communication shall be considered as part of the record for decision unless introduced into evidence by a party to the proceedings.

(g) *Sanctions.* A party or participant who makes a prohibited ex parte communication, or who encourages or solicits another to make any such communication, may be subject to any appropriate sanction or sanctions, including but not limited to, exclusion from the proceedings and adverse rulings on the issues which are the subject of the prohibited communication.

Appendix I—Final Prehearing Order

Case Caption

Final Prehearing Order

A prehearing conference was held in this matter pursuant to Rule 21 of the Administration's Rules of Practice for Adjudicative Proceedings, on the ———— day of ————, 19—, at —— o'clock —M.

Counsel appeared as follows:

For the Administration staff:

For the Respondent(s):

Others:

1. NATURE OF ACTION AND JURISDICTION.

This is an action for————

—

and the jurisdiction of the Administration is involved under Section —— of Title —. U.S.C. The jurisdiction of the Administration is (not) disputed. The questions of jurisdiction was decided as follows:

2. STIPULATIONS AND STATEMENTS.

The following stipulations and statements were submitted, attached to, and made a part of this order:

(a) A comprehensive written stipulation or statement of all uncontested facts;

(b) A concise summary of the ultimate facts as claimed by each party. (Complaint Counsel must set forth the claimed facts, specifically; for example, if violation is, claimed, Complaint Counsel must assert specifically the acts of violation complained of; each respondent must reply with equal clarity and detail.)

(c) Written stipulations or statements setting forth the qualifications of the expert witnesses to be called by each party;

(d) A written list or lists of the witnesses whom each party will call, a written list or lists of the additional witnesses whom each party *may* call, and a statement of the subject on which each witness will testify;

(e) An agreed statement of the contested issues of fact and of law, and/or separate statements by each party or any contested issues of fact and law not agreed to;

(f) A list of all depositions to be read into evidence and statements of any objections thereto;

(g) A list and brief description of any charts, graphs, models, schematic diagrams, and similar objects that will be used in opening statements or closing arguments, but will not be offered in evidence. If any other such objects are to be used by any party, they will be submitted to opposing counsel at least three days prior to hearing. It there is then any objection to their use, the dispute will be submitted to the Presiding Officer at least one day prior to hearing;

(h) Written waivers of claims or defenses which have been abandoned by the parties.

The foregoing were modified at the pretrial conference as follows:

[To be completed at the conference itself. If none, recite "none"]

3. COMPLAINT COUNSEL'S EVIDENCE.

3.1 The following exhibits were offered by Complaint Counsel, received in evidence, and marked as follows:

[Identification number and brief description of each exhibit]

The authenticity of these exhibits has been stipulated.

3.2 The following exhibits were offered by the Complaint Counsel and marked for identification. There was reserved to the respondent(s) and party intervenors, if any, the right to object to their receipt in evidence on the grounds stated:

[Identification number and brief description of each exhibit. State briefly ground of objection, e.g., competency, relevancy, materiality]

4. RESPONDENT'S EVIDENCE.

4.1 The following exhibits were offered by the respondent(s), received in evidence, and marked as herein indicated:

[Identification number and brief description of each exhibit]

The authenticity of these exhibits has been stipulated.

4.2 The following exhibits were offered by the respondent(s) and marked for identification. There was reserved to Complaint Counsel and party intervenors, if any, the right to object to their receipt in evidence on the grounds stated:

[Identification number and brief description of each exhibit. State briefly ground of objection, e.g., competency, relevancy, materiality]

5. ADDITIONAL ACTIONS.

The following additional action was taken:

[Amendments to pleadings, agreements of the parties, disposition of motions, separation of issues of liability and remedy, etc., if necessary]

6. LIMITATIONS AND RESERVATIONS.

6.1 Each of the parties has the right to further supplement the list of witnesses not later than ten (10) days prior to trial by furnishing opposing counsel with the name and address of the witness and general subject matter of his or her testimony and filing a supplement to this pretrial order. Thereafter additional witnesses may be added only after application to the Presiding Officer, for good cause shown.

6.2 Rebuttal witnesses not listed in the exhibits to this order may be called only if the necessity of their testimony could not reasonably be foreseen ten (10) days prior to trial. If it appears to counsel at any time before trial that such rebuttal witnesses will be called, notice will immediately be given to opposing counsel and the Presiding Officer.

6.3 The probable length of hearing is — days. The hearings will be commenced on the —— day of ————, 19—, at —— o'clock —M. at (location) ————.

6.4 Prehearing briefs will be filed not later than 5:00 p.m. on ———— (Insert date not later than ten (10) days prior to hearing.) All anticipated legal questions, including those relating to the admissibility of evidence, must be covered by prehearing briefs.

This prehearing order has been formulated after a conference at which counsel for the respective parties appeared. Reasonable opportunity has been afforded counsel for corrections or additions prior to signing. It will control the course of the hearing, and it may not be amended except by consent of the parties and the Presiding Officer, or by order of the Presiding Officer to prevent manifest injustice.

————————

(Presiding Officer's Name)

(Presiding Officer's Title)
APPROVED AS TO FORM AND SUBSTANCE
Date: ———.

Complaint Counsel.

Attorney for Respondent(s).

Note.—Where intervenors appear pursuant to § 511.17 the prehearing order may be suitably modified; the initial page may be modified to reflect the intervention.

[FR Doc. 80-38204 Filed 12-10-80; 8:45 am]
BILLING CODE 4S10-59-M

49 CFR Part 533

[Docket No. FE 78-01; Notice 4]

Light Truck Average Fuel Economy Standards; Model Years 1983-85

AGENCY: National Highway Traffic Safety Administration (NHTSA), Department of Transportation.

ACTION: Final rule.

SUMMARY: This notice establishes average fuel economy standards for light trucks manufactured in model years 1983-85. Section 502(b) of the Motor Vehicle Information and Cost Savings Act ("the Act") requires that standards be established for each model year at the maximum feasible level. Model year 1983-85 light trucks complying with these standards are expected to consume approximately 10 billion less gallons of gasoline over their lifetime, than would have been consumed if light truck average fuel economy were to remain at the levels of the 1982 standards.

EFFECTIVE DATE: These standards are effective for the 1983-85 model year.

FOR FURTHER INFORMATION CONTACT: Mr. Philip W. Davis, Office of Automotive Fuel Economy Standards (NRM-21), 400 Seventh Street, SW., Washington, D.C. 20590 (202-472-6902).

SUPPLEMENTARY INFORMATION: This notice establishes average fuel economy standards for light trucks manufactured in model years 1983-1985. On December 31, 1979, the agency published proposed standards for light trucks manufactured in model years 1982-85, in 44 FR 77199. Due to the requirement in section 502(b) of the Act that standards be established at least 18 months prior to the start of the affected model year and due to the many complex issues involved in setting standards for the later model years, the agency separately established final standards for the 1982 model year on March 31, 1980. See 45 FR 20871. Previously, the agency established standards for light trucks manufactured in 1979 (42 FR 13807, March 14, 1977), and 1980-81 (43 FR 11995, March 23, 1978, and 44 FR 36975, June 25, 1979). Passenger automobile standards were established in the Act for model years 1978-80 and 1985 and thereafter (15 U.S.C. 2002(a)(1)), and adminstratively by NHTSA for model years 1981-84 (42 FR 33534, June 30, 1977).

Section 502(b) of the Act requires that average fuel economy standards for light trucks be established for each model year at the "maximum feasible average fuel economy level." In determining that level, the agency is directed to consider technological feasability, economic practicability, the need of the nation to conserve energy, and the effects of other Federal motor vehicle standards on fuel economy. A discussion of how the agency interprets these requirements is set forth in the preamble to the notice establishing the 1981-84 passenger automobile standards, cited in the previous paragraph.

In its proposal the agency invited comment upon a range of possible fuel economy standards for 1983-85. The use of a range of fuel economy values rather than a single value for each model year reflected uncertainty at the time of the proposal with respect to such issues as demand for new, compact truck models, the acceptability to consumers of light trucks with smaller displacement engines (with corresponding higher fuel economy but reduced acceleration and grade-climbing capability), and the existence and magnitude of a claimed fuel economy penalty resulting from emission standards applicable to light trucks beginning with the 1983 model year. Specifically, the ranges of fuel economy values cites in the proposal for 2-wheel drive (4x2) and the 4-wheel drive (4x4) light trucks were as follows:

	4x2 (mpg)	4x4 (mpg)
1983	18.0-20.0	15.6-18.0
1984	18.8-21.4	16.1-19.3
1985	19.7-22.4	16.2-19.9

The vehicles covered by these standards include the pickup trucks, vans, and utility vehicles typically used for personal or mixed personal/commercial purposes, i.e., those with gross vehicle weight ratings (GVWR's) up to and including 8,500 pounds.

Comments on the proposed 1983-85 light truck standards were received from the domestic light truck manufacturers, Toyota, the U.S. Department of Energy (DOE) and the Regulatory Analysis Review Group (RARG). Because of the significance of certain issues raised by DOE and RARG, a notice was published in the Federal Register inviting public comment on those issues. See 45 FR 35403, May 27, 1980. The comments received on various issues in the rulemaking are summarized below, along with the agency's response to those comments and a summary of the basis for the final standards.

Many of the comments received in this rulemaking and many of the details of the agency's analysis contain confidential information. The confidentiality of this information (typically involving future products plans of the domestic manufacturers, especially for new models which have the greatest effect on fuel economy) prevents the agency from presenting in this notice a detailed description of the comments received and the agency's response to those comments. Nevertheless, the agency has attempted to describe the basis for the final standards by providing a general overview of these matters and an approximation of a "typical" future product plan for compliance with the standards established herein. This approach has been adopted after balancing the public's need to know the basis for the agency's actions against the manfacturers' needs to maintain the confidentiality of their future product plans. The agency in this case has tended to tip the balance in favor of preserving confidentiality. Comment is invited on how the agency could better resolve this conflict between the public's need to know and the manufacturers' need to maintain confidentiality of certain information.

a. *Structure of the standard.* In all the light truck standard-setting to date, the agency has provided some form of separate treatment for 4-wheel drive vehicles. In 1979, the manufacturers were given the option of combining all their light trucks into one fleet and complying with the 4x2 numerical level. In 1980-82, no alternative single standard was provided. Separate standards were provided (under the authority of section 502(b) of the Act to establish separate standards for different classes of light trucks) due to the lower fuel economy of 4x4's and the fact that two companies, American Motors and International Harvester, offered fleets comprised almost exclusively of 4x4 vehicles. Given the lower average fuel economy of those vehicles, any single standard would have had to be set low enough to accommodate those companies (giving no incentive for the other companies to achieve higher fuel economy) or above their capability (possibly penalizing

those companies). Separate standards avoided this problem.

While establishing separate standards for each of several vehicle classes reduces inequities for companies with less fuel efficient fleet mixes, it also has certain disadvantages. Separate class standards reduce manufacturers' flexibility in complying with standards, by requiring improvements to each class of vehicles subject to standards rather than permitting the option of making a major improvement to only one class of vehicles. For example, under the classification system used for the model year 1980–82 standards, making a major improvement in the fuel economy of a manufacturer's vans (which are 4x2's) would not assist that company's efforts to meet the 4x4 standard.

RARG requested that NHTSA consider the establishment of a "composite" fuel economy standard as a means of providing varying levels of fuel economy standards based on differences in mix of 4x2 and 4x4 vehicles, or other more narrow classes, without the offsetting disadvantages of separate class standards. Each manufacturer's composite standard, for example, could be based upon a projected mix of 4x2 and 4x4 vehicles, with a production-weighted average fuel economy standard being calculated from separate 4x2 and 4x4 targets developed as the agency had developed separate standards in the past. Thus, each company would have a different numerical fuel economy standard, depending on its projected production mix. A manufacturer with a high proportion of 4x2 vehicles would have a higher standard than a manufacturer with a lower proportion of them.

All the major domestic manufacturers commented on the RARG proposal, with Chrysler supporting it and Ford supporting it as an option (to be used at the manufacturer's election) to complying with separate standards. General motors (GM) supported the concept of a composite standard but opposed separate standards for different companies. American Motors also opposed different standards for each company.

The agency agrees with RARG's goals in proposing the composite standard, but, like some of the manufacturers, doubts the existence of any authority to set different standards for different companies based solely on mix projections. However, the advantages of the composite standard can be achieved in the 1983–85 model years through the addition of an optional single average fuel economy standard applicable to all companies. The use of a single standard (other than one set at a very low level which would sacrifice fuel economy) is possible because of projected substantial improvements in the AM fleet fuel economy (see following sections of this notice) and because International Harvester has decided to stop producing the Scout vehicle. This leaves the average fuel economy levels projected for all the domestic manufacturers within a narrow enough range to make the establishment of a single fuel economy standard for all an effective means of promoting conservation while providing the manufacturers with substantial flexibility in achieving compliance.

The combined standard is established as an option to the separate 4x2 and 4x4 standards which the agency has issued beginning with the 1980 model year. This action is being taken to permit manufacturers seeking greater investment flexibility to opt for the combined standard and to permit manufacturers seeking to increase sales of 4x4 vehicles to opt for the separate standards. Further, this approach will provide some stability in the year-to-year structure of the agency's light truck standards and would provide relief in the post-1985 period should manufacturers such as American Motors not be able to make further fuel economy improvements in their exclusively 4x4 fleets.

b. *Basic methodology.* Several comments were received, principally from DOE, with regard to the methodology used by the agency to project future model year average fuel economy. DOE objected that the baseline used by NHTSA to project future years' fuel economy was inappropriate. The baseline used to develop the proposed fuel economy ranges for 1983–85 was the 1981 standards, which were in turn based upon pre-1979 product mix estimates and 1979 fuel economy test results. More recent mix and fuel economy information was not available at the time the agency proposed the 1983–85 standards. In particular, DOE suggested that changes be made in the baseline to reflect the shift in light truck production mix for 1980. Included in this shift are a re-rating of certain trucks with large engines above the 8,500 pound GVWR upper limit of the scope of these standards and a shift in the relative proportion of smaller and larger trucks, precipitated by the rapid increase in gasoline prices in 1979–80.

The agency determined that, to meet DOE's concern about the significant change which the domestic light truck fleets and market have undergone and will undergo by 1985, a different projection methodology would be used to set the 1983–85 standards than has been used in the past. That methodology is described in detail in the agency's rulemaking support paper (RSP), copies of which are available from the individual listed as the "information contact" at the beginning of this notice. Generally, future light truck offerings were grouped in seven classes. These classes provide distinctions between various types of vehicles which have clearly different market attributes. The potential characteristics of each group were analyzed (based primarily on the manufacturers' future product plans, particularly where lead time was a controlling factor) and fuel economy values derived. Sales projections for each group of vehicles were also developed based upon information available to the agency, including the manufacturer's own estimates. Once group fuel economy and sales projections are derived, average fuel economy values for each of the model years 1983–85 were calculated.

DOE also suggested revisions to NHTSA's mathematical model used to predict the effect on fuel economy of small changes in vehicle weight, engine displacement, or axle ratio. DOE developed an alternate model which it believes provides a more accurate prediction of the effect of changes in these vehicles' attributes. Because of the DOE analysis, NHTSA reviewed its fuel economy model and has developed a new model which predicts fuel economy levels more accurately than the original one and, in some cases, the alternative one developed by DOE. Both models provide fuel economy estimates within 5 percent of EPA test data. The major area of concern expressed by DOE was an apparent misunderstanding of the limited manner in which the agency actually used its previous model. This area is described fully in the RSP.

c. *Technological feasibility.* The agency received a number of comments on its analysis of the various methods available to improve light truck fuel economy in the 1983–85 model years, including a comprehensive analysis by the Department of Energy. The DOE analysis concluded that fuel economy levels approximately 1½ mpg above the upper end of the range of fuel economy levels proposed by the agency are achievable by 1985. However, DOE deferred to NHTSA on the manufacturers' capability to finance product changes. On the other hand, the vehicle manufacturers generally recommended that standards be established at the lower end of that range. These overall disagreements

resulted from differences in the detailed fuel economy projections for individual truck models, technology, and sales mix made by NHTSA, DOE, and the manufacturers.

For the final rule, the agency is using fuel economy projections for individual new light truck models which tend to exceed those which formed the basis for the proposed standards. While the individual projections used in the proposal were composites reflecting information from a variety of sources (i.e., the same fuel economy value was used for all manufacturers' models of a particular type), final rule projections are manufacturer-specific. This change was made because the agency received information about manufacturers' plans after the issuance of the proposal, because in many instances individual manufacturer plans could not readily be changed at this late date in the product introduction process for the 1981–85 model years (particularly for the earlier years), and because in some cases the manufacturers' own estimates exceeded those of the agency.

The agency's analysis is based on twelve major light truck types being offered in 1983–85 in seven basic market groups. The types include 4x2 and 4x4 versions of the standard size pickup trucks, standard size utility truck, compact pickup trucks (slightly larger than current imported trucks), and compact utility trucks, along with standard size vans, compact vans (slightly larger than the Volkswagen Vanagon, but smaller than current domestic vans), and a small, front-wheel drive passenger car-derived pickup truck which would be approximately the size of current imports. The precise attributes projected for each manufacturer's light trucks were derived from confidential submissions from those companies and from independent agency analyses. The approximate fuel economy values (in miles per gallon) projected by the agency for each truck type are as follows:

	4 by 2	4 by 4
Full size pickup	19–22	16–19
Compact pickup	27–28	23–26
Small pickup (car-based)	27–30	
Full size van	17–20	
Compact van	22–26	
Full size utility	16–18	16–21
Compact utility	25–27	21–24

The above fuel economy values were derived by NHTSA from submissions from the manufacturers and from the agency's independent analysis. The manufacturer's estimates were verified by comparing their planned new models with similar existing models (adjusting for weight or other differences) and by projecting the addition of all available fuel economy improving technology. This techology typically includes a 1 percent fuel economy benefit for accessory improvements, a 3 percent improvement for engine and rear axle lubricants, a 1 percent benefit for tire improvements, and transmission improvements of from 3.5 to 10 percent, depending on the type of transmission involved. In most cases, the agency's independent assessment closely coincided with or was slightly more conservative than that of the manufacturers, in which case the agency used the manufacturer's estimate in the analysis. Where the manufacturer's estimate appeared to be unduly conservative, the agency used its own estimate.

Sales projections for the various models were developed principally from the manufacturers' own estimates, estimates of Data Resources Incorporated, and the agency's own judgment of future light truck demand. The agency made two separate sales estimates of future light truck market conditions, which are described in detail in the agency's Final Regulatory Analysis, copies of which are available from NHTSA's Office of Plans and Programs. The cases were developed to cover the probable range of light truck sales mixes in 1983–85. In general, Case A assumes that manufacturers undertake an aggressive program of introduction of new, fuel efficient light truck models and that strong consumer demand for these models will exist. This case represents the agency's estimate of the largest number of new model introductions each manufacturer would likely be able to undertake, considering its financial position, lead time, and competitive pressures. Case B assumes that demand for compact light trucks is less than in Case A, but still significantly higher than in the past when no domestic compact trucks were produced. In the latter scenario, the introduction of new, fuel efficient models is delayed one or more years compared to Case A due to lack of financial capability, need to invest in passenger car programs, and more limited demand for those trucks. The projected sales fractions for new light truck models for the various manufacturers and in the various model years are as follows:

	Case A (pct)	Case B (pct)
Compact 4x2 pickup	25–35	15–25
Compact 4x4 pickup/utility	10–15	10
Compact van	15–25	0–10
Small car-based pickup	0–20	0–10

It should be noted that not every manufacturer is projected to offer all of these new models, and that current standard size truck models would still account for a substantial portion of light truck sales through 1985 under the agency's projections. A typical composite light truck fleet for 1985 under the agency's analysis would contain roughly the following fleet mix:

	Case A (pct)	Case B (pct)
Standard 4x2 pickup	20	40
Standard 4x4 pickup/utility	10	15
Standard van	5	15
Compact 4x2 pickup	20	15
Compact 4x4 pickup/utility	15	5
Compact van	25	10
Small car-based pickup	5	0

Using these approximate fuel economy values and sales fractions, one can calculate average fuel economy values of about 22 mpg for Case A and 20 mpg for Case B. However, such averages are only approximations (used here because of the confidential nature of much of the specific fuel economy values and sales projections) and do not reflect the problems which individual manufacturers face in financing new models.

With respect to the 1983 and 1984 model years, the agency projected a fairly even rate of introduction of these new models, given the major investments required for production of a new vehicle and the current financal difficulties of the domestic manufacturers. This projection leads to an average fuel economy levels increasing about 1.5 to 2 mpg per year over the level of the 1982 standards (about 17.5 mpg) for Case A or about 1 mpg per year for Case B, on a total domestic light truck fleet basis.

As previously stated, the agency has chosen to set final standards for 1983–85 relying heavily on the domestic manufacturers' estimates of new model fuel economy values and market shares. This was done because the agency recognized the current financial difficulties of the domestic manufacturers (see discussion below) and independently verified the new model fuel economy values provided by the manufacturers.

DOE's main objections to NHTSA's new model projections were that the new compact pickup trucks should be projected to be the same size as current imports or smaller (rather than slightly larger as NHTSA projects), that the engines projected for those vehicles should be all 4-cylinder (rather than a mix of 4- and 6-cylinder engines as NHTSA projects), and that redesigned standard pickup trucks should be projected to have lower weights than NHTSA has estimated.

To a great extent DOE's disagreement with NHTSA with respect to the fuel economy levels projected for new models was phrased in terms of DOE's view of the domestic manufacturers' *plans* to offer new models. Based on numerous submissions to NHTSA, DOE's understanding of those plans is incorrect. Apparently the domestic manufacturers have determined that new compact models slightly larger than those now offered by the foreign companies will be an attractive alternative for consumers, providing more utility to the truck user at only about a 2 mpg sacrifice in fuel economy. The recent trend for the foreign manufacturers has been to slightly increase the size of their trucks. The domestic companies apparently feel that their planned small trucks have the potential to draw some purchasers who might otherwise consider full size trucks, and that offering new models identical to the imports might be less effective in attracting those purchasers and thereby result in less overall energy savings. In any case, the question of whether the domestic companies could offer smaller new models than they now plan is largely irrelevant, due to the advanced stage of their product introduction process (trade press reports indicate manufacturers will begin to introduce these models in the 1982 model year).

The agency received several comments on technological improvements projected for the 1983–85 model years. One area of comment involved the 1 percent fuel economy benefit projected for improved engine accessories. DOE commented that a 2 percent improvement is feasible, and some manufacturers indicated that a lesser improvement is the most which could be accomplished through 1985. The agency has retained its original projection (based on several research studies and manufacturer submissions) for the final rule, with the exception that accessory improvements were not projected for carry-over standard size trucks. No improvement was projected for the latter vehicles, due to limitations on manufacturer resources given the planned major product actions and the inefficiency associated with devoting resources to vehicles which would account for steadily diminishing portions of total sales and which would be replaced by new models in the near future. The agency's original 1 percent benefit was retained due to the absence of any data or analysis submitted by the commenters to support any other position.

With respect to the agency's projection of a 1 percent fuel economy benefit for reduced rolling resistance, none of the manufacturers presented data or engineering analyses supporting their claims that no such benefit is feasible. DOE argued that an additional 0.5 percent benefit should be provided for reduced brake drag, but submitted no data to support that claim. Here again, in the absence of supporting data or analysis for any contrary position, the agency retained its original position.

DOE also suggested that aerodynamic drag and weight reduction improvements should be projected for the carry-over standard size vans and weight reduction improvements alone for standard pickup trucks. DOE would apply these improvements only where a manufacturer did not plan to replace these models in the near future. NHTSA did not adopt this suggestion for vans because of limited manufacturer resources and because the cost associated with such changes could not be justified given the small potential fuel economy benefit and the relatively small market share (about 5 percent for Case A). With respect to the weight reduction comment for carryover pickup trucks, the agency believes that meaningful weight reduction can be obtained only through major redesigns. The agency's basis for projecting no further major redesigns for the domestic manufacturers is discussed in the "economic practicability" section of this notice. Due to the economic difficulties of the domestic manufacturers and the large number of lay-offs of technical personnel in those companies (as prominently reported in the press), resources will likely be hard-pressed simply to introduce the planned new models.

In the agency's proposal, an alternative set of assumptions (Case 4) was developed to obtain comment on the extent to which engine downsizing could be accomplished as a means of improving light truck fuel economy. The Case 4 scenario involved a major shift to the smallest displacement engines currently offered. DOE projected that a lesser reduction in engine displacement could be accomplished to provide about a 5 percent fuel economy improvement. According to DOE, this improvement could be accomplished without degrading vehicle performance, through improvements in engine power efficiency. The manufacturers generally argued that only slight engine downsizing could be accomplished, with Ford stating that a 2 percent fuel economy benefit could be obtained and GM stating that the feasibility of any engine downsizing in the future is "questionable."

For the final rule, the agency is projecting major engine downsizing through the introduction of new, compact truck models. Given current low sales of domestic trucks and the strong competition being encountered from the imports, the agency cannot project any further reductions in engine size (with probable reductions in vehicle acceleration capability) which might further jeopardize the marketability of these vehicles. DOE provided no data or analysis and NHTSA knows of none to support its claim that further engine downsizing could be accomplished without sacrificing performance capability or durability.

The final technological area addressed by commenters is transmission improvements. The agency is retaining its original projections of a 5 to 7 percent improvement from 4-speed wide ratio manual transmissions (whether overdrive or direct drive), a 3.5 percent improvement when adding a lock-up clutch to a 3-speed automatic transmission, and a 10 percent improvement for automatic overdrive transmissions with lockup clutch. Several manufacturers argued that lower improvements should be projected, but they either did not support their claims with data or, in one case, submitted data (after the agency requested it) which was more supportive of the agency's position than the manufacturer's.

Ford argued that only a 0.5 percent improvement in fuel economy is available for its light trucks through the use of improved engine lubricants. Ford supported its position with data generated by the ASTM Fuel Efficient Oils Task Force, which indicates that Ford's current factory fill oil has superior fuel efficiency characteristics than the oils used by other manufacturers. In other words, it appears that Ford has already achieved part of the benefit available through the use of improved lubricants, leaving a small benefit remaining for the future. Therefore, the agency adopted Ford's projected improvement for our analysis

of that manufacturer's capability. The agency continued to use 2 percent for the other manufacturers.

The manufacturers unanimously suggested that the agency continue its policy of excluding diesel engines in standard-setting analyses until the health related questions associated with the widespread use of those engines are settled. DOE, on the other hand, argued that the agency's analysis should reflect the inclusion of this technology, which represents one of the most significant methods available for improving light truck fuel economy. Although EPA has established diesel particulate standards, the health effect issue remains open. Therefore, the agency's analysis reflects the plans of manufacturers to offer diesel engines in 1983–85 model year light trucks, but does not project any use of diesels beyond those plans. The agency is reluctant to project further dieselization while substantial health questions remain to be answered. The levels of the final standards do not *require* the use of diesels for compliance, since all companies can meet the standards without any diesel light trucks being offered.

Ford commented that the agency should not project the use of PROCO ("programmed combustion") engines in 1983–85 model year light trucks. Ford recently announced the cancellation of its V-8 PROCO engine program due to a variety of economic and technical problems. Therefore, the agency will delete those engines from its analysis.

d. *Economic practicability.* The current depressed condition of the domestic auto industry has had a major impact on the agency's standard-setting process. Although the low fuel efficiency of current domestic vehicles was initially a major contributing factor to that condition, the agency recognizes that major improvements in light truck fuel economy must be financed mainly through revenues generated from the sale of current vehicles. The recent downturn in the national economy has severely limited the resources available to the manufacturers to improve light truck fuel economy.

The agency performed cash flow analyses for Ford and General Motors, to assess their capability to finance fuel economy improvements. For Chrysler, the agency has relied on the more detailed analyses of the Chrysler Loan Guarantee Board. No analysis was conducted for American Motors, pending the completion of its financial arrangement with Renault. The agency's analysis for General Motors' U.S. and Canadian automotive operations in the 1980–85 period shows a loss of about $500 million dollars for 1980, but a return to profitability for the remainder of the period. Due to the heavy capital investment plan announced by GM through 1985, net cash flow would be negative for GM through 1983, and would turn positive thereafter. With respect to Ford, the agency's projections are more pessimistic. The agency's analysis shows losses of over $2.5 billion for Ford's domestic automotive operations in 1980, with annual but smaller losses through 1982. Thereafter, Ford would return to profitability. Even though Ford has recently announced reductions in its planned capital expenditures, its cash flow would remain negative until 1985, with a cumulative negative cash flow in 1980–84 of over $7 billion. This large projected negative cash flow led the agency to project no major capital expenditures beyond those planned by Ford for purposes of this rulemaking (See section h of this notice).

e. *The effects of other Federal Standards on Fuel economy.*

The manufacturers all argued that their ability to improve fuel economy in model years 1983–85 would be impaired by changes in the stringency of light duty truck emission standards and related requirements. Those changes, which EPA had proposed to make effective beginning with the 1983 model year but which were recently delayed until 1984 to provide additional leadtime, would, in the manufacturers' view, result in fuel economy penalties ranging from 3 to 7 percent. General Motors has recently submitted 1981 model year data to both NHTSA and EPA which purports to show that the penalty could range as high as 13 percent for some light trucks.

The manufacturers have based their claims on comparisons of 1980 49-state fuel economy and the fuel economy of light trucks meeting the more stringent California standards. The manufacturers believe that the stringency of the 1980 California standards approximate that of the 1984 Federal emission standards for light duty trucks. Both NHTSA and EPA have been wary in past rulemakings of relying on Federal-California fuel economy comparisons in predicting future model year effects because of the additional lead-time available prior to the nationwide application of more stringent standards, questions about emission control technology used, and limitations on manufacturer resources available for developing and refining emission control technology to be used on vehicles sold only in one state.

The most advanced emission control technology currently available is a system employing a 3-way catalyst with interactive electronic control of air-to-fuel ratio, spark advance, exhaust gas recirculation, and other parameters, and other emission-related hardware. This type of technology is being used to meet 1981 passenger automobile emission standards with little or no fuel economy penalty compared to automobiles meeting prior years' standards. Some of the manufacturers' projections of 1984 light truck fuel economy penalties are based on the use of this type of technology, but others do not include it, apparently due to cost considerations. In some cases, the manufacturers have based their projections of penalties on the use of simple oxidation catalyst systems, possibly incorporating less sophisticated electronics. NHTSA's analysis of limited data from 1981 certification trucks which used some form of electronic controls showed no appreciable difference in fuel economy between California and Federal versions.

EPA, in establishing the 1984 standards, concluded that the 1984 emission levels can be met without fuel economy penalty by using electronic engine control systems, improved oxidation catalysts, and air injection. Three-way catalysts would not be needed in most cases. EPA concluded, based upon a comparison of 1980 California and Federal light duty trucks, that with no improvement over the current California technology, a penalty of 5.2 percent on average would result. Since EPA concluded that California emission requirements for 1980 are more stringent than the 1984 Federal standards and adjusting for future engine mix changes, the fuel economy penalty associated with the 1984 standards would be only 4 percent if no technology improvements were implemented. Based on EPA's review of published technical literature, that agency concluded that through the use of "moderately complex" electronics (controlling spark advance and exhaust gas recirculation rate) together with improved oxidation catalysts and air injection, the 1984 emission standards could be met without fuel economy penalty. Compliance with the standards was projected by EPA to add $95 to the price of 1984 light trucks. The EPA analysis appears to be the most complete and detailed analysis of the emission penalty issue now available. Therefore, the agency projects for purposes of this final rule that the 1984 emission levels can be met without fuel economy penalty, consistent with the position taken by the agency in setting the 1981–84 passenger automobile fuel economy standards.

Ford projected an additional fuel economy penalty for a change in stringency in the light duty truck emission standards for oxides of nitrogen in the 1985 model year. Such a change has not been proposed at this point. Therefore, NHTSA deems it premature to attempt to estimate the magnitude of any fuel economy penalty which might result from such changes.

The manufacturers also estimated that adverse fuel economy effects would result from future changes in safety standards applicable to light trucks. These changes would result in slight increases in vehicle weight. Since the agency adopted the manufacturers' own weight estimates for future vehicles, their claims of safety-related weight additions have been adopted.

f. *The need of the nation to conserve energy.* The United States imported only 15% of its oil needs at a cost of $1.1 billion in 1955. In 1970, imported oil accounted for 31% of total consumption and cost the nation $3.0 billion. But by 1975, 49% of the domestic demand for oil had to be imported at a cost of $26.3 billion. This eight-fold increase in the cost of imported oil over five years was the result of huge OPEC price increases, falling domestic crude oil production, and continued increase in domestic demand. This trend has continued. By 1979, imported oil, constituting 58% of petroleum consumed, cost the nation about $60 billion comparable import cost estimates for 1980 are $82 billion, and at 51% of domestic petroleum consumption.

The nation has become increasingly dependent for its oil supplies on the actions and decisions of a few foreign governments. This dependence has been demonstrated in the aftermath of the revolution in Iran when that country's oil production was stopped entirely in December 1978 and, once resumed, only returned to about one-half of its former level. Although the U.S. no longer imports oil from Iran, this reduction was felt by *all* importers because it represented the difference between satisfying current world oil demand and a shortage of supply. OPEC, which supplied 83% of the U.S.'s imported oil in 1978, has taken advantage of the tight world oil market by more than doubling prices from $12.70 per barrel in December 1978, to more than $30.00 per barrel as of July 1980. Currently, prices on the world "spot" market are about $35 per barrel. An increase of this magnitude has severe adverse impacts on our trade balance, inflation, economic growth, unemployment, and confidence in the dollar as an international reserve currency.

The rapid transition from a condition of apparent worldwide surplus in 1978 to one of shortage in 1979 has shown the instability of the world oil market. Now the Iran-Iraq war may again bring worldwide shortages. Thus, the nation's economic growth and national security are being heavily constrained by the decisions of few foreign countries which control world oil prices and production.

The U.S. can change this situation by increasing its domestic energy production and by reducing demand. The fuel economy standards program helps to reduce demand by motor vehicles. Light trucks account for about 7% of our total oil consumption (20 percent of automobile consumption) and an improvement in their fuel efficiency, beyond the level scheduled to be achieved through the MY 1982 standards, is considered an integral part of the nation's total effort to conserve energy. Increased light truck fuel economy efficiency would contribute directly to reduced U.S. dependence on foreign oil and help limit foreign oil imports to a level no greater than the amount imported in 1978—in accordance with the President's pledge.

g. *Selection of final standards.* Based on the analysis described above, the agency projects that the following combined fuel economy levels can be achieved for model years 1983–85:

	Case A			Case B		
	1983	1984	1985	1983	1984	1985
AM	20.3	21.7	22.3	20.2	21.2	21.5
Chrysler	20.6	23.9	27.0	20.3	20.4	25.7
Ford	20.4	21.8	21.8	19.0	19.3	19.4
GM	22.7	23.2	23.5	21.1	21.2	22.0

No separate analysis was conducted for the foreign manufacturers, which project exceeding these fuel economy levels by wide margins.

The legal requirements for establishing the maximum feasible average fuel economy level for a particular model year, and thereby the levels of fuel economy standards for that year, are discussed in the preamble to the agency's final rule establishing the 1982 light truck standards. See 45 FR 20875–6, March 31, 1980. In general, the agency is directed to take "industry-wide considerations" into account in establishing standards, and should not necessarily key the standards to the level of the least capable manufacturer. However, the agency must weigh the benefits to the nation of setting standards above such a manufacturer's level against the difficulties of individual companies. The agency must also consider the possible competitive harm associated with placing a severe strain on any company, given the small number of domestic manufacturers. In this proceeding, the agency is considering not only the range of capabilities *among* the various manufacturers but also the ranges of capability for individual companies, given the uncertainties associated with their abilities to finance new models and the ultimate market acceptance of those models.

The agency has determined that standards requiring the high rates of model introduction and high sales levels of compact trucks inherent in Case A should be gradually phased in. Therefore, the standards established for 1983 are based on the Case B set of assumptions. Even this less aggressive scenario results in an increase in fuel economy of about 1.5 mpg over the 1982 standards, comparable to the rate of increase in the passenger automobile standards over the 1980–85 period. As discussed previously in this notice, the Case B levels would permit deferral of new model introductions for some manufacturers and reduce the risk associated with only modest market acceptance of the new truck models. Relying on Case B for the 1983 model year reflects uncertainty regarding the national economy, the ability of the manufacturers to finance major new programs in the near future, and the recent reduced overall consumer demand for cars and trucks.

For 1984 and 1985, the agency has relied to a greater extent on the Case A scenario, with 1984 projections falling between Case A and Case B and 1985 projections more closely approaching Case A. This gradual increase in relative stringency of the agency's projections is due in part to the greater lead-time available for developing new programs and for generating the capital necessary to finance the required new products. Also reflected is greater long term certainty that, as gasoline prices increase, market demand for compact, fuel efficient truck models will also increase. Although the past seven years have brought brief gasoline supply gluts or price reductions, it is virtually certain that in the long run the trend toward reduced gasoline supplies and higher prices will continue.

With respect to the range of fuel economy capabilities among manufacturers, the agency has determined that it is appropriate in this proceeding to set the 1983–85 light truck fuel economy standards at levels achievable by the "least capable manufacturer." As stated by Ford in its comments on the 1983–85 standards, the reasonableness of a decision to set

standards above the level of the least capable manufacturer depends upon factors such as economic conditions and the degree of burden placed upon the individual companies.

The severe economic problems facing the manufacturers (and in particular Ford, the least capable manufacturer for 1983–85 based on the agency's analysis) were discussed in prior sections of this notice. Setting standards above the levels projected for Ford in this proceeding could result in Ford attempting to introduce additional compact truck models or major new technology programs such as diesel engines. While such actions, if successfully completed, might benefit Ford and the nation in the long run, the agency recognizes the uncertain availability of financial resources to take such actions. Setting standards above Ford's level might also result in product restrictions by Ford (e.g., limiting the sale of larger trucks and engines). Such actions could further erode Ford's economic situation. Finally, Ford could elect to pay civil penalties rather than attempting to meet the higher standards. Penalties could amount to as much as $75 million per year. While even a penalty that large might not result in insolvency for a company as large as Ford or a "substantial lessening of competiton" in the truck market (thereby permitting a reduction of penalties under section 508 of the Act), it is certainly substantial enough to make future fuel economy improvements even more difficult to finance.

The harm resulting from establishing fuel economy standards at Ford's level is the lost fuel savings. Considering the nation's serious energy problem (see discussion of "need of the nation to conserve energy," infra), the agency does not lightly dismiss this potential loss. However, given the seriousness of the industry's current financial problems, this potential loss in fuel savings is, in the agency's view, outweighed by the potential harm to Ford in setting standards above the level it can reasonably achieve.

The situation faced by the agency in setting the 1983–85 standards differs from that for the 1982 final rule, in which the agency set standards above the level of the least capable manufacturer. The most important difference between the two situations is that the 1982 proceeding involved setting the fuel economy standards above the level of a much smaller portion of the light truck fleet. Chrysler, whose trucks represent 10–15 percent of domestic sales, had the lowest fuel economy projection in that proceeding. Ford accounts for about 35 percent of domestic sales. Further, Chrysler was projected to have sufficient monetary credits to avoid paying penalties for its 4x2 trucks, and to partially offset penalties for its much smaller 4x4 fleet. The maximum total penalty should be under $1 million.

By setting standards at the level of the least capable manufacturer and gradually shifting from the Case B scenario in 1983 toward the Case A scenario in 1985, fuel economy standards of 19 mpg in 1983, 20 mpg in 1984, and 21 mpg in 1985 result.

The agency also calculated separate 4x2 and 4x4 fuel economy levels. This was done by projecting a compliance strategy product plan for the least capable manufacturer to just meet the combined fuel economy standards and disaggregating that company's fleet into separate 4x2 and 4x4 sub-fleets. The resulting 4x2 and 4x4 standards are as follows: 19.5, 20.3, and 21.6 mpg for 4x2's in 1983–85, respectively, and 17.5, 18.5, and 19.0 mpg for 4x4's in those same years.

h. *Other comments received.* RARG proposed that an alternative methodology be used to set the 1983–85 fuel economy standards. This methodology would require that standards be based on available technological improvements which provide fuel savings greater than their cost. The costs and benefits which go into this determination would include not only the relatively straight-forward gasoline pump prices and technology costs but also some quantification of national security, balance of payments and related benefits as well as truck utility degradation (e.g., smaller payload, reduced acceleration capability) costs. The manufacturers supported this approach in their comments.

The RARG methodology is a slight variation of the cost-benefit test previously proposed by the Council on Wage and Price Stability and rejected by the agency as being inconsistent with the Act. Title V of the Cost Savings Act requires that standards be set at "maximum feasible" levels, which necessarily implies that all possible fuel economy improvements should be implemented. Given the historical background of the Act, passed as a response to the 1973 Oil Embargo, it appears that national security considerations, not consumer cost savings, are the primary focus of the legislation. Further, RARG concedes that setting a precise value for the national security benefits and vehicle utility changes would be quite difficult. It is the agency's view that Congress did not intend that the agency in the rulemaking process be required to place a dollar value on factors (particularly the national security benefits) which are not quantifiable, and to use these numbers as the basis for setting standards. Nevertheless, the agency's fuel economy rulemaking has to date produced standards which produce substantial net benefits for consumers, and the standards established herein are no exception.

GM argued that in valuing gasoline savings, a 20 percent discount rate should be used. The agency has used a 10 percent discount rate, which is standard for government programs, and constant dollars to account for inflation. GM bases its argument on its claim that light truck purchases are generally a "producer capital investment" and that the opportunity cost for capital, together with a "risk premium" to account for risks associated with truck investments, would justify the 20 percent rate. However, the agency has presented data in its various light truck rulemaking proceedings which shows that light trucks are principally used for personal, agricultural, or small commercial operations. In those situations, a 10 percent discount rate is a more accurate representation of the opportunity cost.

GM also argued for a change to the agency's classification regulations to permit redesigned versions of 4x2 utility vehicles to continue to be classified as light trucks even if their GVWR were to be reduced below 6,000 pounds. Under the agency's current regulations in 49 CFR Part 523, such a change in the vehicles' GVWR would result in their being classified as passenger automobiles. GM argues that manufacturers should not be penalized (including these vehicles in passenger automobile fleets might lower both car and truck CAFE's) for reducing the weight of their trucks. If adopted, such an amendment would presumably apply to future compact 4x2 utility vehicles as well.

Chrysler also requested a revision to the vehicle classification regulations to assure that future compact passenger vans would be classified as light trucks, rather than as passenger automobiles. Current regulations classify large passenger vans as light trucks based on the ability of passenger van users to readily remove the rear seats to produce a flat, floor level cargo-carrying space. Future compact passenger vans might not be able to satisfy that requirement. The agency's technical analysis for this rulemaking treats 4x2 utility vehicles and passenger vans as light trucks, consistent with the classification of

current vehicles. However, this treatment should not be interpreted as a statement by the agency that all future designs of 4x2 utility vehicles and compact vans will continue to be classified as light trucks. The agency will in the near future issue a notice inviting comment on the proper classification of these vehicles, and what revisions, if any, should be made to current vehicle classification regulations. Based on all information now available to the agency, the levels of fuel economy standards established herein would not change if the vehicles in question were classified as passenger automobiles.

AM again argued for the inclusion of captive import light trucks in a domestic manufacturer's CAFE. This issue has been fully dealt with in prior rulemakings and, in the absence of any new arguments, the agency will not modify its requirement that captive import light trucks must comply separately with light truck fuel economy standards.

i. *Impacts of the standards.* The economic consequences and other impacts of the 1983–85 standards were considered by the agency in accordance with Executive Order 12221 and the Department's implementing regulations. See 44 FR 11034. The agency also considered the "Urban and Community Impacts" of the regulations, as required by Executive Order 12074. The results of this are discussed in the agency's Regulatory Analysis, copies of which are available from the agency's Office of Plans and Programs. That document states that capital investments of approximately $3.8 billion will be required to raise the fuel economy of the domestic light truck fleet from the level of the 1982 standards to the level of the 1985 standards. This investment would reduce expenditures for imported petroleum by $7 billion over the life of the 1983–85 light truck fleet. Operating cost savings result from the increased fuel efficiency of the 1983–85 fleets. On a discounted basis, they amount to $1,250 per vehicle over its 128,000 mile life. Net consumer savings—operating cost savings less retail price increases—are nearly $1,200 per vehicle. On a benefit to cost basis, these standards would have a ratio of 19 to 1. Or, the purchaser of a 1985 truck would be paying, through higher purchase prices, about 5 cents for each of the 1,200 gallons that vehicle would save over its life—5 cents to save each of 1,200 gallons that would otherwise have cost the purchaser about $1.50 per gallon. These standards result in a 20 percent reduction in operating costs for a MY 1985 light truck.

The environmental impacts of the 1983–85 standards were also considered, as required by the National Environmental Policy Act, 42 U.S.C. 4321, *et seq.* The major environmental impacts associated with the standards were found to be positive, such as reductions of petroleum consumption and material usage (less iron and steel). No major adverse impacts were projected.

(Sec. 9, Pub. L. 89–670, 80 Stat. 981 (49 U.S.C. 1657); sec. 301, Pub. L. 94–163, 89 Stat. 901 (15 U.S.C. 2002); delegation of authority at 49 CFR 1.50)

Issued on December 8, 1980.

Joan Claybrook,

Administrator.

PART 533—LIGHT TRUCK AVERAGE FUEL ECONOMY STANDARDS

In consideration of the foregoing, 49 CFR Chapter V is amended as follows:

§ 533.5 [Amended]

1. By adding the following table immediately after the existing table in § 533.5(a):

	Combined standard		2-wheel drive light trucks		4-wheel drive light trucks	
	Captive imports	Others	Captive imports	Others	Captive imports	Others
1983	19	19	19.5	19.5	17.5	17.5
1984	20	20	20.3	20.3	18.5	18.5
1985	21	21	21.6	21.6	19.0	19.0

2. By adding a new § 533.5(d) as follows:

* * * * *

(d) For model years 1983–85, each manufacturer may:

(1) Combine its 2- and 4-wheel drive light trucks (segregating captive import and other light trucks) and comply with the combined average fuel economy standard specified in paragraph (a) of this section; or

(2) Comply separately with the 2-wheel drive standards and the 4-wheel drive standards (segregating captive import and other light trucks) specified in paragraph (a) of this section.

[FR Doc. 80-38490 Filed 12-9-80; 12:02 pm]

BILLING CODE 4910-59-M

DEPARTMENT OF THE INTERIOR

Fish and Wildlife Service

50 CFR Part 33

National Wildlife Refuges in Kansas, Nebraska, and South Dakota; Sport Fishing

AGENCY: Fish and Wildlife Service, Interior.

ACTION: Special regulations.

SUMMARY: The Director has determined that the opening to sport fishing of certain National Wildlife Refuges in Kansas, Nebraska and South Dakota is compatible with the objectives for which the areas were established, will utilize a renewable natural resource, and will provide additional recreational opportunity to the public. These special regulations describe the conditions under which sport fishing will be permitted on these areas during the 1981 fishing season.

DATES: Period covered—January 1, 1981 to December 31, 1981. See State regulations for specific fishing seasons.

FOR FURTHER INFORMATION CONTACT: James W. Salyer, Area Manager 605/2248692, or appropriate refuge manager at the address or telephone listed below:

Area Manager, U.S. Fish and Wildlife Service, Federal Building, Room 221, P.O. Box 250, Pierre, South Dakota 57501, Telephone: 605/224–8692

Keith Hansen, Refuge Manager, Kirwin National Wildlife Refuge, Kirwin, Kansas 67644, Telephone: 913/543–6673

C. Fred Zeillemaker, Refuge Manager, Crescent Lake National Wildlife Refuge, Ellsworth, Nebraska 69340, Telephone: 308/762–4893

C. Fred Zeillemaker, Refuge Manager, North Platte National Wildlife; Ellsworth, Nebraska 69340, Telephone: 308/762–4893

Sam Waldstein, Refuge Manager, Sand Lake National Wildlife Refuge, Rural Route, Columbia, South Dakota 57433, Telephone: 605/885–6320

Sam Waldstein, Refuge Manager, Pocasse National Wildlife Refuge, Rural Route, Columbia, South Dakota 57433, Telephone: 605/885–6320.

SUPPLEMENTARY INFORMATION: Charles L. Sowards is the primary author of these special regulations.

General Conditions

1. Fishing is permitted on national wildlife refuges indicated below in accordance with 50 CFR Part 33, all

applicable State regulations, the general conditions, and the following special regulations:

The Refuge Recreation Act of 1962 (16 U.S.C. 460K) authorizes the Secretary of the Interior to administer such areas for public recreation as an appropriate incidental or secondary use only to the extent that it is practicable and not inconsistent with the primary objectives for which the area was established. In addition, the Refuge Recreation Act requires: (a) That any recreational use permitted will not interfere with the primary purpose for which the area was established; and (b) that funds are available for the development, operation, and maintenance of the permitted forms of recreation.

The recreational use authorized by these regulations will not interfere with the primary purposes for which these refuges were established. The determination is based upon consideration of, among other things, the Service's Final Environmental Statement in the Operation of the National Wildlife Refuge System published in November, 1976. Funds are available for the administration of the recreational activities permitted by these regulations.

2. A list of conditions applying to the individual refuge and a map of the sport fishing area(s) are available at refuge headquarters. Portions of refuges which are closed to fishing are designated by signs and/or delineated on maps.

3. Access points on certain refuges are limited to designated roads or other specific areas. Vehicle use on all refuge areas is restricted to designated roads and lanes.

4. Sport fishing on portions of the following refuges shall be in accordance with all applicable State and Federal regulations and conditions as indicated.

§ 33.5 Special regulations; sport fishing for individual wildlife areas.

Kansas

Kirwin National Wildlife Refuge

1. Sport fishing permitted year round on all areas not designated by signs as closed to fishing.

2. Sport fishing shall be in accordance with all applicable State regulations.

Nebraska

Crescent Lake National Wildlife Refuge

Sport fishing is permitted on the Crescent Lake National Wildlife Refuge, Nebraska, only on Island and Hackberry Lakes designated by signs as being open to fishing.

These areas, comprising approximately 1086 acres (Hackberry Lake 375, Island Lake 711), are delineated on maps available at refuge headquarters. Sport fishing shall be in accordance with all applicable State regulations subject to the following additional conditions:

1. Fishing and boating will be allowed on Hackberry Lake from January 1 to April 15 and from July 16 to December 31 only.

2. Fishing and boating will be allowed on Island Lake in its entirety from January 1 to April 15 and from July 16 to December 31. During the period April 16 to July 15, fishing and boating will be restricted to the south portion of the lake as posted. Boats propelled with poles, oars, paddles or electric motors only may be used.

3. The use or possession of live or dead minnows or whole fish for bait and the possession of any seine or net for capturing live minnows or fish are prohibited. Parts of dead fish may be used as bait.

4. Overnight camping is prohibited.

5. Open fires are prohibited.

North Platte National Wildlife Refuge

Sport fishing is permitted on the North Platte National Wildlife Refuge, Nebraska, on all areas subject signing placed by the Nebraska Game and Parks Commission and/or the U.S. Bureau of Reclamation.

The open area is comprised of approximately 3,300 acres. Sport fishing shall be in accordance with all applicable State regulations subject to the following additional conditions:

1. Fishing will be allowed January 15 through September 30 only.

2. Boats, motorboats and other floating craft may be used on the refuge during the fishing season only.

South Dakota

Pocasse National Wildlife Refuge

1. Sport fishing shall be in accordance with all State regulations.

2. The use of boats is permitted northwest of Highway #10 only; boats are not permitted southeast of Highway #10.

Sand Lake National Wildlife Refuge

1. Sport fishing shall be in accordance with all applicable State regulations.

2. The use of boats is not permitted.

The provisions of these special regulations supplement the general regulations which govern fishing on wildlife refuge areas which are set forth in Title 50, Code of Federal Regulations, Part 33. The public is invited to offer suggestions and comments at any time.

Dated: December 3, 1980.

Charles L. Sowards,

Acting Area Manager.

[FR Doc. 80-38303 Filed 12-10-80; 8:45 am]

BILLING CODE 4310-55-M

Proposed Rules

Federal Register
Vol. 45, No. 240
Thursday, December 11, 1980

This section of the FEDERAL REGISTER contains notices to the public of the proposed issuance of rules and regulations. The purpose of these notices is to give interested persons an opportunity to participate in the rule making prior to the adoption of the final rules.

NUCLEAR REGULATORY COMMISSION

10 CFR Part 50

Domestic Licensing of Production and Utilization Facilities; Design and Other Changes in Nuclear Power Plant Facilities After Issuance of Construction Permit

AGENCY: U.S. Nuclear Regulatory Commission.

ACTION: Advance notice of proposed rulemaking.

SUMMARY: The U.S. Nuclear Regulatory Commission is considering amending its regulations to define more clearly the limitations on a construction permit holder to make changes in a facility during construction. This advance notice of proposed rulemaking is being published to invite comments, suggestions, or recommendations on the content of the proposed amendment. There will also be opportunity later for additional public comment on the proposed rule, if any, that may be developed by the Commission.

DATES: Comments must be received by February 9, 1981. Comments received after February 1, 1981, will be considered if it is practical to do so, but assurance of consideration cannot be given except as to comments filed on or before February 1, 1981.

ADDRESSES: Written comments, suggestions, or recommendations should be sent to the Secretary of the Commission, U.S. Nuclear Regulatory Commission, Washington, D.C. 20555. Attention: Docketing and Services Branch. Copies of comments received may be examined at the NRC Public Document Room at 1717 H Street, N.W., Washington, D.C.

FOR FURTHER INFORMATION CONTACT: Warren Minners, Office of Nuclear Reactor Regulation, U.S. Nuclear Regulatory Commission, Washington, D.C. 20555, Phone: 301/492-7581.

SUPPLEMENTARY INFORMATION:

Background

The Atomic Energy Act of 1954, as amended, and the regulations of the Nuclear Regulatory Commission (NRC) provide a framework for issuance of construction permits (CPs) for nuclear power plants, but do not define precisely the commitment to which a permittee is legally bound when the NRC grants it a CP. As a result, there are conflicting opinions concerning the requirements associated with a CP, particularly with regard to whether a permittee is bound by representations made in its application, including the Preliminary Safety Analysis Report (PSAR), and on the hearing record. Because of this, for many years the NRC staff has been faced with the problem of not having clear guidelines for regulating changes in facility design, or in the permittee's procedures and staffing, between the time a CP is issued and a Final Safety Analysis Report (FSAR) is filed by the permittee as part of its Operating License (OL) application. Therefore, the staff's actions and practices (as well as those of holders of CPs) in this matter have developed on a case-by-case basis over the years.

The problem arises because the applicant is not required to supply initially all of the technical information required to complete the application and support the issuance of a CP which approves all proposed design features, so long as the Commission is able to make the requisite findings under Section 50.35(a) of 10 CFR Part 50.

As noted in a 1970 rule change with respect to Section 50.35 (35 FR 5317, "Backfitting of Production and Utilization Facilities; Construction Permits and Operating Licenses," March 31, 1970), one reason for not having defined precisely an applicant's CP commitments was an awareness that "the rapidly expanding technology in the field of atomic energy means that new or improved features or designs that may enhance the safety of production and utilization facilities are continually being developed." This echoed the Supreme Court's decision in *Power Reactor Development Co.* v. *Electrical Union*, 362 U.S. 396 (1961). Thus, the judgment was made that a permittee should only be bound by the "principal architectural and engineering criteria."

The present system provides no guidance regarding notification of design changes made after issuance of a CP or the type of staff response to be made. CP holders have informed NRC of design changes from the PSAR in various ways: transmittal of letters and PSAR amendments, submittal of informal drafts and oral communications, and delay of notification until submittal of the FSAR. The NRC staff's responses to notifications of such changes have most commonly been to defer detailed review until the OL application is reviewed. However, where the staff has considered a proposed design change significant and judged that the matter must be resolved before construction proceeds too far, it has undertaken detailed reviews. In some cases, safety evaluations or letters to CP holders have been written stating the staff's views about the proposed change.

The existing process has led to three major problems. First, there is no clear basis upon which the Office of Nuclear Reactor Regulation (NRR) can assess definitely whether changes in facility design, permittee procedures, or staffing after issuance of a CP require a formal CP amendment; second, there is no clear basis on which the Office of Inspection and Enforcement (IE) can enforce requirements in a CP; and third, the present process, since it provides no ground rules about the changes CP holders may make, on occasion prompts litigants (other than applicants) in CP hearings to litigate many details of the application in order to bind applicants.

An attempt to resolve some of these problems was made by the Atomic Energy Commission in a rule proposed in 1969 (34 FR 6540, April 16, 1969) that would have added, among other things, a new section defining the "principal architectural and engineering criteria," departure from which would have required a CP amendment.

Most commenters on the proposed rule criticized the definition for being so broad and so all-inclusive as to lead to the conclusion that the proposed rule would make it mandatory that the design of the facility, as well as the quality assurance program, should be essentially complete and not subject to change at the CP stage, unless an applicant were willing to continually propose changes and amendments to its CP (thereby undergoing frequent and time-consuming scrutiny by the NRC staff).

In promulgating the final rule (35 FR 5317, March 31, 1970), the Atomic Energy Commission deleted the proposed definition saying that it required further study.

Since 1970, two staff studies were made in order to specify clearly what a holder of a CP could and could not change to provide a regulation that would be enforceable and to institute a new mode of doing business that would not cause a proliferation of CP amendments for minor changes. The results of the first study were reported in December 1975 and the results of the second in March 1977.[1] In both studies the staff tried to provide definitive guidance as to changes that would require a CP amendment by attempting to define the "principal architectural and engineering criteria" and establishing guidelines to determine when a proposed change would not fall within these criteria.

The first study proposed to make the "Design Features" section of the Technical Specifications a binding part of the CP, in the same way that the entire Technical Specifications are made part of an OL. In specifying the "Design Features," principal reliance would be placed on use of the Standard Review Plan, the General Design Criteria, Regulatory Guides, Branch Technical Positions, and industry criteria, codes, and standards to the extent necessary.

In the second study, the staff proposed that the term "principal architectural and engineering criteria" reference the General Design Criteria of Appendix A to 10 CFR Part 50 and have the same meaning as the term "principal design criteria" as used in § 50.34(a)(3)(i). The study proposed that the acceptance criteria provided in each of the Standard Review Plan sections constituted, in fact, the principal design criteria and should be used to develop a document consisting of a list of the "principal architectural and engineering criteria." The study also proposed fifteen other changes that would require a CP amendment. Of these, twelve items related to changes in the major features or components of a facility. Proposed guidance was provided to assist in determining when a proposed change would require a CP amendment.

Although both reports were subject to some peer review, no formal action was taken because of time pressures, difficulties of definition similar to those of the rule proposed in 1969, and the feeling that the present system was workable.

Commission Intentions

It is clear from a review of the present procedures, the 1969 rulemaking, and the two studies cited, that a rule should be considered that would improve the present licensing process and develop specific descriptions of the essential features of a facility (including the quality assurance program and other procedures and staffing requirements) to which the CP holder would be bound (whether under the rule, license conditions, or through a Licensing Board decision). The key problem, then, is to clarify and specify to what information the CP holder should be bound, at what point in the licensing process, under what circumstances, and through what means. There is also a need to control the way in which a CP holder implements NRC criteria.

The rulemaking proceeding will address the objectives of such a regulation, the alternative means of accomplishing the objective, and the advantages and disadvantages of each alternative. The areas to be addressed would include: (1) alternative descriptions of the essential features of the design, procedures, and staffing of a facility to which a CP holder would be bound, (2) specification of which changes would require no action, which would require notification, and which would require prior approval, and (3) the form of requirement, whether through rule, license condition, Licensing Board decision, or CP amendment.

The following five alternatives have been suggested:[2]

1. Maintain the status quo.
2. Drawing on § 50.55(e) of 10 CFR Part 50 (dealing with notifications of significant deficiencies having safety significance) and § 50.59 (dealing with changes to previously approved designs having safety significance), adopt a rule that establishes general criteria for determining circumstances requiring notification and CP amendment.
3. Adopt a rule defining "principal architectural and engineering criteria" (in effect reviving the 1969 rulemaking on this subject), using information learned to date.
4. Adopt a rule that all details of the application, including the PSAR, be made conditions of the CP and may not be changed without prior Commission approval.
5. Restructure the licensing process to require that sufficient plant design details and equipment performance specifications be provided in the PSAR so that the safety analysis can be essentially a final one. Upon review and approval, the important safety-related elements of the design would be made conditions of the CP and could not be changed without prior Commissioner approval. Staff review at the OL stage would then be primarily a matter of confirming that the "as built" plant conformed to the CP-stage safety analysis.

The Commission tentatively prefers implementation of Alternative 3 with a shift to Alternative 5 on June 1, 1983. Rules based on the concepts of alternatives 2, 3, or 4 could be imposed immediately. Alternatives 2 and 3 could provide some specified interval to allow the holders of construction permits to develop a list and description of the features or other changes subject to the rule. Alternatives 4 and 5 could be applied practicably only to new CPs.

Comments, suggestions, or recommendations on a proposed rule that would clarify the bounds on a construction permit holder during the course of construction are invited from all interested persons. Comments which discuss advantages or disadvantages, including cost or implementation schedules and the extent to which any such rule should be applied to existing construction permit holders, are particularly sought.

Dated at Washington, D.C. this 5th day of December, 1980.

For the Nuclear Regulatory Commission.

Samuel J. Chilk,

Secretary of the Commission.

[FR Doc. 80-33430 Filed 12-10-80; 8:45 am]

BILLING CODE 7590-01-M

[1] These studies are described in Staff Paper SECY-80-90 (February 14, 1980) which is available for inspection in the Commission's Public Document Room.

[2] These alternatives are described more thoroughly in SECY-80-90 (February 14, 1980), which is available for inspection in the Commission's Public Document Room.

DEPARTMENT OF TRANSPORTATION

Federal Aviation Administration

14 CFR Part 71

[Airspace Docket No. 80-ANW-18]

Transition Areas; Proposed Alteration of 1200' Transition Areas, Pocatello and Idaho Falls, Idaho

AGENCY: Federal Aviation Administration (FAA), DOT.

ACTION: Notice of proposed rulemaking.

SUMMARY: This notice proposes to alter transition area airspace at Pocatello and Idaho Falls, Idaho, to allow maximum utilization of radar vector techniques to arriving and departing aircraft from the Pocatello and Idaho Falls Municipal Airports.

DATES: Comments must be received on or before January 9, 1981.

ADDRESSES: Send comments on the proposal in triplicate to: Chief, Operations, Procedures and Airspace Branch, Federal Aviation Administration, Northwest Region, FAA Building, Boeing Field, Seattle, Washington 98108.

The official docket may be examined at the following location: Office of the Regional Counsel, Federal Aviation Administration, Northwest Region, FAA Building, Boeing Field, Seattle, Washington 98108.

FOR FURTHER INFORMATION CONTACT: Robert L. Brown, Airspace Specialist, Operations, Procedures and Airspace Branch, (ANW-534), Air Traffic Division, Federal Aviation Administration, Northwest Region, FAA Building, Boeing Field, Seattle, Washington 98108; telephone (206) 767-2610.

SUPPLEMENTARY INFORMATION:

Comments Invited

Interested persons are invited to participate in this proposed rulemaking by submitting such written data, views or arguments as they may desire. Comments that provide the factual basis supporting the views and suggestions presented are particularly helpful in developing reasoned regulatory decisions on the proposals. Comments are specifically invited on the overall regulatory, economic, environmental, and energy aspects of the proposals. Communications should identify the airspace docket and be submitted in triplicate to the address listed above. Commenters wishing the FAA to acknowledge receipt of their comments on this notice must submit with those comments a self-addressed, stamped postcard on which the following statement is made: "Comments to Airspace Docket No. 80-ANW-18." The postcard will be date/time stamped and returned to the commenter. All communications received before the specified closing date for comments will be considered before taking action on the proposed rule. The proposals contained in this notice may be changed in the light of comments received. All comments submitted will be available for examination in the Rules Docket both before and after the closing date for comments. A report summarizing each substantive public contact with FAA personnel concerned with this rulemaking will be filed in the docket.

Availability of NPRM's

Any person may obtain a copy of this Notice of Proposed Rulemaking by submitting a request to the Federal Aviation Administration, Chief, Operations, Procedures and Airspace Branch, ANW-530, Northwest Region, FAA Building, Boeing Field, Seattle, Washington 98108, or by calling (206) 767-2610. Communications must identify the notice number of this NPRM. Persons interested in being placed on a mailing list for future NPRMs should also request a copy of Advisory Circular No. 11-2 which describes the application procedure.

The Proposal

The FAA is considering an amendment of § 71.181 of Part 71, of the Federal Aviation Regulations (14 CFR Part 71) to combine and alter the 1200 foot transition areas for the Idaho Falls and Pocatello area. This proposal, if adopted, will allow aircraft at Idaho Falls and Pocatello Airports to remain within controlled airspace and still maintain a normal descent rate while being vectored to the final approach course. This will allow route shortening and associated saving in flight time and fuel consumption. The description of these transition areas under Part 71 was republished on January 2, 1980, (45 FR 445).

The Proposed Amendment

Accordingly, pursuant to the authority delegated to me, the Federal Aviation Administration proposes to amend 1200 feet transition areas at Pocatello and Idaho Falls, Idaho, under § 71.181 of Part 71 of the Federal Aviation Regulations (14 CFR Part 71) as republished (45 FR 445), as follows: [1]

1. By amending Pocatello, Idaho, transition area by deleting all words after, "east of the VORTAC;" beginning on line 4.

2. By amending Idaho Falls, Idaho, transition area by deleting all words after, "northeast of the VORTAC;" beginning on line 4 and substituting: "That airspace extending upward from 1200 feet above the surface bounded by a line beginning at the intersection of longitude 112°30'00"W and the south edge of V298, extending east along V298 to the west edge of V465, southwest on V465 to the north edge of V4, west on V4 to the south edge of V269, then northeast on V269 to the INT of the 29-mile radius circle centered on the Pocatello VORTAC, then clockwise via the 29-mile radius arc to latitude 43°05'40"N, longitude 113°08'00"W, then direct latitude 43°20'30"N, longitude 112°45'30"W, then direct latitude 43°32'00"N, longitude 112°35'00"W, then direct latitude 43°50'20"N, longitude 112°30'00"W, then direct to point of beginning, excluding that airspace within Federal Airways and the Jackson, WY, Burley, ID, transition areas."

[1] Map filed as part of the original document.

(Sec. 307(a), 313(a), and 1110, Federal Aviation Act of 1958 (49 U.S.C. 1348(a), 1354(c), and 1510); Sec. 6(c) Department of Transportation Act (49 U.S.C. 1655(c); and 14 CFR 11.65)

Note.—The FAA has determined that this document involves a proposed regulation which is not significant under Executive Order 12044, as implemented by DOT Regulatory Policies and Procedures (44 FR 11034; February 26, 1979). Since this regulatory action involves an established body of technical requirements for which frequent and routine amendments are necessary to keep them operationally current and promote flight safety, the anticipated impact is so minimal that it does not warrant preparation of a regulatory evaluation and a comment period of less than 45 days is appropriate.

Issued in Seattle, Washington.

Jonathan Howe,

Acting Director, Northwest Region.

[FR Doc. 80-38235 Filed 12-10-80; 8:45 am]

BILLING CODE 4910-13-M

CIVIL AERONAUTICS BOARD

14 CFR Part 300

[Docket 38905; PDR-73A]

Rules of Conduct in Board Proceedings; Extension of Comment Period

AGENCY: Civil Aeronautics Board.

ACTION: Extension of comment period.

SUMMARY: The CAB extends the period for public comments on the proposal to permit assessment of a civil penalty for a violation of its rules of conduct. The extension was requested by the Committee on Aviation and Space of the American Bar Association's Administrative Law Section.

DATES: Comments by: February 10, 1981.

Comments and other relevant information received after this date will be considered by the Board only to the extent practicable.

ADDRESSES: Twenty copies of comments should be sent to Docket 38905, Civil Aeronautics Board, 1825 Connecticut Avenue, N.W., Washington, D.C. 20428. Individuals may submit their views as consumers without filing multiple copies. Copies may be examined in Room 711, Civil Aeronautics Board, 1825 Connecticut Avenue, N.W., Washington, D.C. as soon as they are received.

FOR FURTHER INFORMATION CONTACT: Richard B. Dyson, Associate General Counsel, Office of the General Counsel, Civil Aeronautics Board, 1825

Connecticut Avenue, N.W., Washington, D.C. 20428; 202-673-5442.

SUPPLEMENTARY INFORMATION: In Notice of Proposed Rulemaking PDR-73 (45 FR 73087: November 4, 1980), the Board proposed to amend its rules of conduct (14 CFR Part 300) to permit assessment of a civil penalty as an alternative sanction for violation of those rules. PDR-73 established a 60-day period ending January 5, 1981, for public comment on the proposal.

On November 25, 1980, the Committee on Aviation and Space of the American Bar Association's Administrative Law Section (ABA) filed a petition to extend the comment deadline until February 10, 1981. The ABA requested the extension because it considers the implications of this proposal significant and wants the opportunity to fully develop possible comments during its general session on January 23, 1981.

In view of the importance of allowing full consideration of the issues presented by this rulemaking, and because the Board is especially interested in the views of the ABA on the legal questions raised, I find good cause to allow the extension of time requested.

Accordingly, under authority delegated in 14 CFR 385.20(d), the time for filing comments on PDR-73 in Docket 38905 is extended to February 10, 1981.

(Secs. 204, 401-419, 901, 1001, and 1002, Pub. L. 85-726, as amended; 72 Stat. 743, 754-771, 782 and 783; 76 Stat. 145; 91 Stat. 1284; 92 Stat. 1732; 49 U.S.C. 1324, 1371-1389, 1471, 1481, and 1482)

Richard B. Dyson,

Associate General Counsel, Rules and Legislation.

[FR Doc. 38414 Filed 12-10-80; 8:45 am]

BILLING CODE 6320-01-M

INTERNATIONAL TRADE COMMISSION

19 CFR Part 212

Analysis of Comments and Notice of Withdrawal of Proposed Rule on Country-of-Origin Marking

AGENCY: United States International Trade Commission.

ACTION: Withdrawal of proposed rulemaking.

SUMMARY: The U.S. International Trade Commission hereby withdraws the proposed rule on country-of-origin marking of imported steel wire rope which is sold, offered for sale, or distributed in the United States. A notice of the proposed rule was published for public comment in the Federal Register of February 27, 1980 (45 F.R. 12835).

EFFECTIVE DATE: December 2, 1980.

FOR FURTHER INFORMATION CONTACT: Jack Simmons, Esq., Office of the General Counsel, telephone 202-523-0493.

SUPPLEMENTARY INFORMATION:

Background

The present rulemaking procedure arises from a petition filed by the Committee of Domestic Steel Wire Rope and Specialty Cable Manufacturers ("Committee"), Kenosha, Wis. The petition alleged mismarkings and failure to mark the country of origin of imported steel wire rope being sold or offered for sale or distribution in the United States. The Committee requested that the International Trade Commission issue a rule, defining as an unfair act and method of competition, within the meaning of section 337 of the Tariff Act of 1930 (19 U.S.C. 1337, hereinafter "section 337"), the failure to disclose the country of orgin of imported steel wire rope which is sold or offered for sale or distribution in the United States. The Committee alleged that there is a preference for domestic steel wire rope, and that proper labeling would permit final users to make a knowledgeable selection in the marketplace.

The Commission conducted an informal inquiry into those allegations, during which several instances of possible mismarking or failure to mark imported steel wire rope were brought to its attention. Thereupon, the Commission published for public comment in the Federal Register of February 27, 1980, a proposed rule on country-of-origin marking of steel wire rope (45 F.R. 12835). The period for public comment has now expired.

Summary of Comments Received

Most comments addressed the policy, the advisability, and the legality of the proposed rule, rather than the drafting of the rule itself.

The majority of comments received addressed the need for the rule itself. Of the comments opposed to the rule, the most prevalent was that there is no consumer preference for domestically produced steel wire rope. Several of these comments also stated that the proposed rule "discriminates" against importers and that it is "blatant protectionism." Several comments also argued that the alleged unfair practices are dealt with under existing Federal law. Those comments which favored the proposed rule argued that there is a preference for domestic steel wire rope and that mismarking or failure to mark distorts the market.

Several comments argued that the proposed rule may be inconsistent with Article III, paragraph 4, of the General Agreements on Tariffs and Trade (GATT), the "national treatment clause." Other comments argued that this reasoning is unpersuasive for two reasons. First, Article IX, paragraph 4, specifically permits countries to impose country-of-origin marking requirements. Second, the Protocol of Provisional Application, by which the GATT came into force, states that its provisions shall be applied in a manner not inconsistent with existing legislation.

Several comments also suggested that the proposed rule would create a nontariff barrier. Other comments argued that since the marking requirements would impose minimal costs on those who deal in imported steel wire rope, the proposed rule does not appear to be inconsistent with the "less favourable treatment" clause of the GATT, Article III.

Several comments argued that the proposed rule would conflict with the so-called J-list. 19 CFR. 134.33. Section 304 of the Tariff Act of 1930 (19 U.S.C. 1304), on which the J-list is based, requires country-of-origin labeling on either the product itself or on its container in such form that the "ultimate purchaser" can discern the country of origin of the product. Several comments argued that the proposed rule does not conflict with this provision, and remedies which it could provide for a violation of the rule are different from those available to the U.S. Customs Service. Therefore, they reasoned that the proposed rule is complementary to Customs practice.

Several comments argued that the proposed rule would follow products further through the stream of commerce than the J-list. Other comments argued that if the Commission construes the phrase "ultimate consumer" as used in the rule to mean exactly the same as the term "ultimate purchaser" used in customs J-list regulations, there would be no inconsistency.

Several comments stated that most domestic producers of steel wire rope identify their products by a registered trademark. They argued that section 526 of the Tariff Act of 1930 (19 U.S.C. 1526) provides for the seizure and forfeiture of merchandise which violates a trademark. Other comments noted, however, that this provision is not applicable where imported wire rope bears no trademark.

Several comments argued that the Commission has no authority to promulgate substantive rules, and that

section 335 of the Tariff Act of 1930 (19 U.S.C. 1335) provides authority for procedural rules only. They further argued that *National Petroleum Refiners v. Federal Trade Commission,* 482 F.2d 672 (D.C. Cir. 1973), relied upon by the Commission, is inapposite. Other comments, however, argued that, based on the language of section 335, the Commission has the power to issue and enforce the proposed rule, and that *National Petroleum Refiners* is authority for that proposition.

Several comments argued that before a violation of section 337 can be found, all the elements of section 337(a) must be found to exist by the Commission. They argued that to issue a rule under current circumstances would be to presume, without determining, the truth of the allegations regarding these elements. Comments in favor of the rule conceded that these elements must be found and urged the Commission to proceed with its determination in the rulemaking context.

The Commission notes that it has little experience in dealing with allegations of mismarking or failure to mark as an unfair act or method of competition. Comments have demostrated much controversy over the appropriate scope of the proposed proscribed unfair acts. Given this controversy as well as the necessity of the Commission's making determinations of injury and economic and efficient operation, it has become apparent to the Commission that a rulemaking proceeding would offer few advantages in this case. As such, the Commission believes that better practice would be to treat these allegations under normal section 337 adjudicatory procedures. Especially in an area involving basically unfamiliar alleged unfair acts, using normal adjudicatory proceedings not only would provide greater procedural rights to the parties but would develop a more thorough record for the Commission. Finally, the Commission notes that going forward with a rulemaking proceeding would save no Commission resources, since a full-scale investigation would be required under either a section 337 rulemaking proceeding or a conventional adjudication. In fact, since the comments have demonstrated that findings on all statutory elements would be required in a rulemaking proceeding, and since new procedures would need to be adopted to enable the Commission to make such findings in a rulemaking context, it appears that the use of rulemaking would be more burdensome than adjudication.

Conclusions

On the basis of the comments received and the analysis made, the novelty of the alleged unfair act, the Commission's desire to afford the parties a full and fair opportunity to ventilate all issues, and the fact that rulemaking would not save Commission resources, the Commission has determined to withdraw the proposed rule.

Public Inspection

All comments received from the public are available for public inspection in the Office of the Secretary, U.S. International Trade Commission, 701 E Street NW., Washington, D.C. 20436, during normal business hours.

By order of the Commission.

Issued: December 3, 1980.

Kenneth E. Mason,

Secretary.

[FR Doc. 80-38425 Filed 12-10-80; 8:45 am]

BILLING CODE 7020-02-M

DEPARTMENT OF STATE

Office of the Legal Adviser

22 CFR Part 181

Coordination and Reporting of International Agreements

Correction

In FR Doc. 80-35762 appearing at page 75687 in the issue of Monday, November 17, 1980, in the first column, last line, the date now reading "January 16, 1980" should read "January 16, 1981".

BILLING CODE 1505-01

DEPARTMENT OF THE TREASURY

Internal Revenue Service

26 CFR Part 51

[LR-48-80]

Windfall Profit Tax; Definition of "Producer"

AGENCY: Internal Revenue Service, Treasury.

ACTION: Amendment of proposed rulemaking by cross-reference to amended temporary regulations.

SUMMARY: In the Rules and Regulations portion of this Federal Register, the Internal Revenue Service is issuing temporary excise tax regulations that clarify the definition of the term "producer" for purposes of title I of the Crude Oil Windfall Profit Tax Act of 1980. The text of those temporary regulations also serves as the comment document for this proposed rulemaking.

DATES: Written comments and requests for a public hearing must be delivered or mailed by February 9, 1981.

ADDRESS: Send comments and requests for a public hearing to: Commissioner of Internal Revenue, Attention: CC:LR:T (LR-48-80), Washington, DC 20224.

FOR FURTHER INFORMATION CONTACT: David B. Cubeta of the Legislation and Regulations Division, Office of the Chief Counsel, Internal Revenue Service, 1111 Constitution Avenue, NW., Washington, DC 20224 (Attention: CC:LR:T) (202-566-3297).

SUPPLEMENTARY INFORMATION:

Comments and Public Hearing

Before adoption of the final regulations, consideration will be given to any written comments that are submitted (preferably six copies) to the Commissioner of Internal Revenue. All comments will be available for public inspection and copying. A public hearing will be held upon written request to the Commissioner by any person who has submitted written comments. If a public hearing is held, notice of the time and place will be published in the Federal Register.

Request for Comment Upon Specific Issue

Persons submitting comments are specifically invited to discuss the windfall profit tax treatment of crude oil produced from a property held by a trust or estate (see § 150.4996-1 (b) (2)).

The temporary regulations in the Rules and Regulations portion of this issue of the Federal Register amend part 150 of title 26 of the Code of Federal Regulations. The final regulations, which are proposed to be based on the temporary regulations, would amend 26 CFR Part 51.

For the text of the temporary regulations, see FR Doc. 38385 (T.D. 7742) published in the Rules and Regulations portion of this issue of the Federal Register.

William E. Williams,

Acting Commissioner of Internal Revenue.

[FR Doc. 80-38386 Filed 12-8-80; 2:23 pm]

BILLING CODE 4830-01-M

DEPARTMENT OF TRANSPORTATION

Coast Guard

33 CFR Part 117

[CGD 80-105]

Drawbridge Operation Regulations; Skull Creek, South Carolina

AGENCY: Coast Guard, DOT.

ACTION: Proposed rule.

SUMMARY: At the request of the South Carolina Department of Highways and Public Transportation, the Coast Guard is considering amending the drawbridge regulations that control the operation of the Skull Creek highway swing bridge (James F. Byrnes) across Skull Creek, Atlantic Intracoastal Waterway (AIWW), mile 557.6. This proposal would provide year round closed periods Monday through Friday during peak vehicular traffic when the draw need not open. It is being considered because of significant increases in vehicular traffic during these periods. This action should relieve vehicular traffic during morning and evening rush hours and establish openings during the normal working hours, while still providing for the reasonable needs of navigation.

DATE: Comments must be received on or before January 12, 1981.

ADDRESS: Comments should be submitted to and are available for examination from 7:30 a.m. to 4 p.m., Monday through Friday, at the office of the Commander (oan), Seventh Coast Guard District, 51 Southwest First Avenue, Miami, Florida 33130.

FOR FURTHER INFORMATION CONTACT: James R. Kretschmer, Bridge Administrator, Bridge Section (oan), Room 1006, Federal Building, 51 Southwest First Avenue, Miami, Florida 33130, telephone: (305) 350-4108.

SUPPLEMENTARY INFORMATION: Interested persons are invited to participate in this proposed rule making by submitting written views, comments, data or arguments. Persons submitting comments should include their name and address, identify the bridge and give reasons for concurrence with or any recommended change in the proposal. Persons desiring acknowledgement that their comments have been received should enclose a stamped self-addressed envelope or postcard.

The Commander, Seventh Coast Guard District will evaluate all communications received and determine a course of final action on the proposal. The proposed regulations may be changed in the light of comments received.

Drafting Information

The principal persons involved in drafting this proposal are: Ensign Jane L. Hamilton, Bridge Administration Officer, Office of Aids to Navigation Bridge Section and Lieutenant John M. Griesbaum, Office of Commander, Seventh Coast Guard District, Legal Office.

Discussion of the Proposed Regulation

The Skull Creek swing bridge is presently required to open on signal. The proposed change is being considered in an effort to relieve increased vehicular traffic during the peak periods on the Skull Creek Bridge during the normal weekday working hours. The number of vehicles crossing this bridge has increased from 8,000 per day in 1978 to 11,000 per day in 1980. The Coast Guard is presenting this proposal for comments from affected and interested parties.

In consideration of the foregoing, it is proposed that Part 117 of Title 33 of the Code of Federal Regulations be amended by adding a new § 117.390 immediately after § 117.380 to read as follows:

§ 117.390 Skull Creek, AIWW, mile 557.6, James F. Byrnes Bridge, U.S. Highway 276, Beaufort County, South Carolina.

(a) The draw shall open on signal on Saturday, Sunday, and legal holidays.

(b) On all other days:

(1) The draw shall open on signal from 6:30 p.m. to 7:30 a.m.

(2) The draw shall open on the hour and half-hour from 9:30 a.m. to 3:30 p.m., if any vessels are waiting to pass.

(3) The draw shall not open from 7:30 a.m. to 9:30 a.m. and from 3:30 p.m. to 6:30 p.m. except that the draw shall open at 8:15 a.m., 4:15 p.m. and 5:15 p.m., if any vessels are waiting to pass.

(c) The draw shall open at any time for passage of a public vessel of the United States, tugs with tows, or vessels in distress. The opening signal from these vessels is four blasts of a whistle, horn, or by shouting.

(d) The owners of or agencies controlling the drawbridge shall keep conspicuously posted, both upstream and downstream of the bridge, a sign briefly stating the operating regulations pertaining to the bridge. The sign shall be posted on the bridge or elswhere, in such a manner that it can be easily read at any time for an approaching vessel.

(33 U.S.C. 499, 49 U.S.C. 1655(g)(2); 49 CFR 1.46(c)(5); 33 CFR 1.05-1(g)(3))

Dated: November 20, 1980.

B. L. Stabile,

Rear Admiral, U.S. Coast Guard, Commander, Seventh Coast Guard District.

[FR Doc. 80-33435 Filed 12-10-80; 8:45 am]

BILLING CODE 4910-14-M

33 CFR Part 162

[CGD 80-095]

San Juan Harbor, Seaplane Restricted Area

AGENCY: Coast Guard, DOT.

ACTION: Proposed rule.

SUMMARY: The Coast Guard is proposing to remove navigational restrictions on all seaplane landing areas in San Juan Harbor. All seaplane landing activity by commercial enterprise in the area has ceased and resumption of any such activity is not contemplated in the future. The restricted areas are therefore no longer necessary.

DATES: Comments must be received on or before Janury 26, 1981.

ADDRESSES: Comments should be submitted to Commandant (G-CMC/24)(CGD 80-095), U.S. Coast Guard, Washington, D.C. 20593. Comments will be available for examination at the Marine Safety Council (G-CMC/24), Room 2400, U.S. Coast Guard Headquarters, 2100 Second St., S.W., Washington, D.C. 20593.

FOR FURTHER INFORMATION CONTACT: Ensign Edward G. LeBlanc, Office of Marine Environment and Systems (G-WWM-2), room 1608, Department of Transportation, U.S. Coast Guard Headquarters, 2100 Second Street, S.W., Washington, D.C. 20593, (202) 426-4958.

SUPPLEMENTARY INFORMATION: Interested persons are invited to participate in this proposed rulemaking by submitting written views, data, or arguments. Commenters should include their name and address, reference the docket number (CGD 80-095), identify the specific section of the proposal to which each comments applies, and include sufficient detail to indicate the basis on which each comment is made. All comments received before the expiration of the comment period will be considered before final action is taken on this proposal. No public hearing is planned, but one may be held at a time and place to be set in a later notice in the Federal Register if one is requested in writing by an interested person raising a genuine issue and desiring to comment orally at a public hearing.

Drafting Information

The principal persons involved in drafting this proposal are: Ensign Edward G. LeBlanc, Office of Marine Environment and Systems, and Lieutenant George J. Jordan, Project Counsel, Office of the Chief Counsel.

Discussion of the Proposed Regulations

Much of San Juan Harbor is included in a restricted seaplane landing area as described in 33 CFR 162.265. These regulations were originally promulgated in 33 CFR part 207 by the U.S. Army Corps of Engineers in 1948. The Corps of Engineers later exempted large segments of the restricted area from the regulations as activity slackened, so that approximately two-thirds of the entire restricted area is now exempted. In 1976 these regulations were transferred to the Coast Guard under authority of the Ports and Waterways Safety Act. Only editorial changes of a non-substantive nature were made at that time. Recently the last commercial enterprise to utilize the seaplane landing area ceased its operations there with no intention of resuming activity again in the future.

Because there is now virtually no seaplane activity anywhere in San Juan Harbor, the Coast Guard is proposing to remove and reserve § 162.265. Not only will removal of this section open navigation to an area where restrictions are no longer necessay, it will end confusion among mariners that was caused because such a large portion of the restricted area is exempted.

Evaluation

The proposed regulations have been evaluated under the DOT Order 2100.5, "Policies and Procedures for Simplification, analysis and Review of Regulations," and have been determined to be non-significant. Since the seaplane landing area is not being used, the revocation will have no economic impact, and the Coast Guard has determined that an evaluation is not warranted.

§ 162.265 [Removed]

In consideration of the foregoing, it is proposed that part 162 of Title 33 of the code of Federal Regulations be amended by removing and reserving § 162.265.

(33 U.S.C. 1231; 49 CFR 1.46(n)(4))

Dated: November 17, 1980.

K. G. Wiman,

Captain, U.S. Coast Guard, Acting Chief, Office of Marine Environment and Systems.

[FR Doc. 80-38658 Filed 12-10-80; 8:45 am]

BILLING CODE 4910-14-M

ENVIRONMENTAL PROTECTION AGENCY

40 CFR Part 52

[A-7-FRL 1695-5]

Proposed Revision of the State Implementation Plan for Kansas

AGENCY: Environmental Protection Agency.

ACTION: Proposed rulemaking.

SUMMARY: Part D of the Clean Air Act (CAA), as amended in 1977, requires states to revise their State Implementation Plans (SIPs) for all areas that have not attained the National Ambient Air Quality Standards (NAAQS).

On September 17, 1979 and September 22 and 25, 1980 the State of Kansas submitted to EPA a proposed revision to the SIP for the attainment of the ozone standard in both Wyandotte and Johnson Counties.

On October 22, 1979 and September 22 and 25, 1980, the states submitted to EPA a proposed revision to the SIP for the Douglas County ozone non-attainment area.

On March 10, 1980 and September 22, 1980, the state submitted to EPA a proposed revision to the SIP for the Kansas City primary, total suspended particulate (TSP) nonattainment area. Included in this SIP revision was a request pursuant to the provisions of Section 110(b) of the CAA and 40 CFR 51.31, for an extension until July 1, 1980, for submission of a SIP revision for the Kansas City secondary TSP nonattainment area. As of this date the state has not submitted such a SIP revision.

EPA proposes to approve fully, certain portions of the Kansas submittals and to approve other parts subject to certain conditions. Approval means that regulations adopted by the state will also become enforceable by the Federal government. If final action is taken as proposed herein, the current growth restrictions will be lifted for the Wyandotte and Johnson Counties, the Douglas County, and the Kansas City nonattainment areas.

In this notice the October 22, 1979, March 10, 1980 and September 22 and 25, 1980 submissions are summarized, and issues that affect SIP approval are discussed.

EPA invites public comments on all aspects of the revisions, including the identified issues, the suggested corrections and whether the revision should be approved, conditionally approved, or disapproved, especially with respect to the requirements of Part D of the CAA.

DATES: Comments received on or before January 12, 1980, and those received in response to the February 11, 1980 proposed rulemaking will be considered in EPA's final decision on the SIP.

ADDRESSES: Copies of the proposed SIP revisions and the accompanying support documents are available for inspection during normal business hours at the following locations.

U.S. Environmental Protection Agency, Air Support Branch, 324 East 11th Street, Kansas City, Missouri 64106

Public Information Reference Unit, Room 2922, EPA Library, U.S. Environmental Protection Agency, 401 M Street SW., Washington, D.C. 20460

The Office of the Federal Register, 1100 L Street NW., Room 8401, Washington, D.C. 20408

Kansas Department of Health and Environment, Bureau of Air Quality and Occupational Health, Forbes Field, Topeka, Kansas 66101

Mid-America Regional Council, 20 West Ninth Street, Kansas City, Missouri 64105

All comments on the proposed revision should be directed to: Ms. Jane E. Ratcliffe, Air Support Branch, U.S. Environmental Protection Agency, Region VII, 324 East 11th Street, Kansas City, Missouri 64106.

FOR FURTHER INFORMATION CONTACT: Jane E. Ratcliffe at (816) 374-3791, (FTS 758-3791).

SUPPLEMENTARY INFORMATION:

A. General Discussion

The Clean Air Act as amended in 1977 contains requirements which must be addressed in a SIP submission. Part D (Sections 171-178) details the requirements for an approvable nonattainment plan. Section 110 contains the general requirements for a SIP. Section 120 relates to noncompliance penalties. Section 121 requires the state to consult with local governments on various matters. Section 123 limits the availability of dispersion techniques for certain sources. Section 126 relates to interstate pollution abatement. Section 127 requires public notification of violations of health-related standards. Section 128 imposes requirements concerning conflicts of interest. Part C (Section 160-169) requires plans to contain measures for the prevention of significant deterioration of air quality.

For general background, the reader may refer to the Federal Register of April 4, 1979 (44 FR 20372), July 2, 1979 (44 FR 38583), August 28, 1979 (44 FR 50371), September 17, 1979 (44 FR 53761)

and November 23, 1979 (44 FR 67182), which consist of the general preamble to the proposed rulemaking for all nonattainment plan submissions. Section 172 of the Act requires States to submit to EPA plan revisions containing strategies to attain ambient air quality standards in all areas designated nonattainment. Nonattainment designations are codified in 40 CFR Part 81.

The State of Kansas has submitted revisions to its SIP as required by Part D. The state submittal also addresses Section 121 concerning consultation with local governments. The remaining non-Part D items have not been addressed.

These revisions were submitted by the State of Kansas Department of Health and Environment at the request of the Governor, to EPA on September 22 and 25, 1980, October 22, 1979, and March 10, 1980. Receipt of the Kansas revisions was first announced in the Federal Register of April 4, 1980 (45 FR 22981), and subsequent notices were published June 2, 1980 (45 FR 37224), and September 24, 1980 (45 FR 63301) and public comment on the revisions was requested at that time.

The EPA proposes to approve fully portions of the plan and conditionally approve where there are minor deficiencies. The EPA proposes to conditionally approve portions where the state provides assurances that it will submit corrections by specified deadlines. This notice solicits comments on what items should be conditionally approved, and on what deadlines should apply for meeting the conditions. A conditional approval will mean that the restrictions on new major source construction will not apply unless the state fails to submit the necessary SIP revisions by the scheduled dates, or unless the revisions are not approved by EPA.

B. Nonattainment Plan Provisions

The state has submitted plan revisions addressing nonattainment problems in these areas:

Wyandotte County—ozone
Johnson County—ozone
Douglas County—ozone
Kansas City—TSP (primary)

The state intends to submit a plan revision for the three remaining nonattainment areas:

Wichita—carbon monoxide
Kansas City—TSP (secondary)
Topeka—TSP (secondary)

The EPA has published a proposed rulemaking in the Federal Register, February 11, 1980 (45 FR 9012), on the Wyandotte and Johnson County ozone plan submission of September 17, 1979.

This proposal will discuss the Wyandotte and Johnson Counties ozone, the Douglas County ozone, and the Kansas City TSP SIP submittals in terms of basic requirements for nonattainment plan revisions as contained in Section 172 of the Act. Where these submissions are deficient with respect to some requirements, they will be discussed in detail under heading, D. Approvability Issues. Items which are not identified as approvability issues are proposed to be approved as meeting the appropriate requirement. The subject proposed rulemaking constitutes a reproposal for the Wyandotte and Johnson Counties ozone plan and an original proposal for the Douglas County ozone plan, and the Kansas City TSP plan. Reproposal of the Wyandotte and Johnson Counties ozone plan is necessary because of numerous changes in regulations submitted by the state after the original proposal appeared in the Federal Register, February 11, 1980 (45 FR 9012). General Discussion: The State of Kansas officially submitted the revised ozone SIP for Wyandotte, Johnson and Douglas Counties and the revised particulate matter SIP for Kansas City to the Regional Administrator, EPA Region VII, on September 17, 1979, September 22 and 25, 1980, October 22, 1979, and March 10, 1980, respectively.

The revised SIP for the Wyandotte and Johnson Counties ozone nonattainment area was submitted to EPA on September 17, 1979. EPA's comments on this submission were published in the February 11, 1980, Federal Register (45 FR 9012). This submission contains proposed regulations on reasonably available control technology (RACT) for the control of volatile organic compounds (VOC) from stationary sources and on a permit program for new or modified sources. A time frame for adopting the proposed regulations as permanent regulations is included in the submission. An explanation of the procedures for adopting a temporary or permanent regulation and statutory restraints relating to a permanent or temporary regulation is given below in Section B(11). However, early in 1980 the state decided to delay proceeding with permanent adoption of these regulations. The state chose to revise the regulations in order to incorporate impending changes in EPA requirements on these two elements of the SIP and to also correct the deficiency of the VOC regulations which is noted in the February 11, 1980 proposed rulemaking (45 FR 9017, Col. 1 and 2 and 9019, Col. 2). On September 25, 1980, Kansas officially submitted the revised VOC regulations adopted as temporary regulations on September 10, 1980. Proposed VOC regulations have been available to the public for review since June 2, 1980 (45 FR 37224). Kansas adopted unchanged the proposed VOC regulations. As discussed above, the September 24, 1980 Notice of Availability (45 FR 63301) announces receipt of the revised new source review permit regulation which the state informally submitted to EPA for its preliminary review in early September and officially submitted on September 22, 1980. Except for several minor changes in the text, the state has indicated it intends to adopt and file this proposed regulation as a temporary regulation by December 31, 1980. The minor changes are discussed in Section B (7).

Because of the numerous changes in these regulatory elements affecting new and existing sources in the Wyandotte and Johnson Counties which the state submitted after the original submission, this rulemaking constitutes a reproposal of the ozone SIP for these counties.

The Douglas County ozone nonattainment area is classified as a rural ozone nonattainment area (population less than 200,000 persons). The requirements for an approvable SIP for rural ozone nonattainment areas are discussed in the General Preamble of April 4, 1979 (44 FR at 20374–20376). Briefly, these requirements are the following. The state must assure reasonable further progress and attainment but need not include specific demonstration of attainment for the rural nonattainment area. The plan must include RACT for all major existing point sources (100 tons potential emissions) for which EPA has issued a control technique guideline (CTG). In addition, the state must include regulations satisfying the requirements of Section 173 of the CAA for new sources, except that a source in the rural area need not demonstrate that increased emissions will be accommodated or offset by emission reductions elsewhere in the area as is generally required by Section 173(1).

The October 22, 1979 Douglas County submission notes that after having completed an inventory of all sources located in the county that are covered by the CTGs issued through 1978, the Kansas Department of Health and Environment (KDHE) certifies that there are no major point sources in the area, covered by the CTG documents, which have the potential to emit more than 100 tons per year of VOC. KDHE has

recently indicated to EPA that VOC emissions from cutback asphalt sources in the county are greater than 100 tons per year. Since cutback asphalt is a category covered under a CTG, and sources having the potential to emit more than 100 tons per year of VOC exist in Douglas County, the state has adopted a temporary VOC RACT regulation for this category. It is included in the September 25, 1980 submission.

The following discussion summarizes EPA's comments on various elements of the September 22 and 25, 1980 Wyandotte and Johnson Counties ozone, the October 22, 1979, Douglas County ozone, and the March 10, 1980 Kansas City TSP SIP submittals as they relate to Part D of the Act:

(1) Adoption After Reasonable Notice and Hearing—Section 172(b)(1) of the CAA requires that the plan be adopted by the state after providing reasonable notice and public hearing. The State of Kansas has adequately satisfied this requirement. A public hearing to discuss the Wyandotte and Johnson Counties and the Douglas County ozone SIP revision on the VOC RACT regulations was held on July 21, 1980 in Topeka, Kansas. A public hearing to discuss the new source review permit regulation which is required for the Wyandotte and Johnson Counties, the Douglas County, and the Kansas City nonattainment areas was held on October 27, 1980 in Topeka, Kansas. A public hearing to discuss the Kansas City TSP SIP, was held on August 22, 1979 in Kansas City, Missouri.

(2) Demonstration of Attainment—Section 172(a)(1) requires that the Plan provides attainment for each NAAQS as expeditiously as practicable, but for primary standards, not later than December 31, 1982 (or in certain instances not applicable to the Kansas SIP, December 31, 1987).

Based on the submittal for Wyandotte and Johnson Counties, the State of Kansas anticipates attaining the ozone standard in those counties by the above deadline. A specific demonstration of attainment is not required for rural ozone SIPs. The state anticipates achieving the TSP standard by December 31, 1982. EPA believes this is as expeditious as practicable. EPA proposes to approve the demonstration of attainment for ozone and the state's approach to attaining the TSP standard. A summary of the ozone and TSP attainment demonstrations follow.

Using a linear rollback model, the state ascertains an 11.4 percent reduction in emissions from existing VOC sources must be obtained to achieve the ozone standard by the deadline. Projections show that based on reductions projected for the Federal Motor Vehicle Control Program (FMVCP), 1982 reactive VOC for the nonattainment area will total 41,634 tons per year, 589 tons per year below the maximum allowable emission rate. However, where the state uses linear rollback, EPA requires as a minimum that the SIP must also provide for control of all existing major sources for which EPA has issued a CTG and a commitment by the state to adopt and submit additional requirements for any sources covered by future CTGs.

Six sources in Wyandotte and Johnson Counties must be controlled for VOC emissions. The state projects an additional reduction of 13,419 tons per year for the nonattainment area. These control measures are discussed further in Section B(8), Reasonably Available Control Measures.

The Kansas TSP plan utilizes the Climatological Dispersion Model (CDM) to predict the concentrations in 1982 at the five TSP monitoring sites located within the designated primary nonattainment area. Based on enforceable reductions in TSP emissions from point sources and area sources by 1982, the plan predicts that TSP levels at three of the five monitoring sites will be decreased to levels below the primary NAAQS before the end of 1982. With this model, two monitoring sites are not shown to be achieving the NAAQS for TSP before the end of 1982. They are located at 3105 Fairfax Road and 420 Kansas Avenue.

Alternatively, an empirical model is used to predict TSP concentrations based on estimates of emissions from area type sources located one mile or less from the sampling location and from point sources located within a five mile radius of the sampler. The state anticipates the implementation of improved street cleaning procedures on the streets located within one-quarter mile of the sampling site will reduce current particulate concentrations at the 3105 Fairfax Road location (monitoring site 4) below the NAAQS for TSP as expeditiously as practicable before the December 31, 1982 deadline. The plan notes that the validity of this projection is contingent upon a demonstration that appropriate street cleaning procedures can be identified and implemented in the area to reduce emissions of reentrained street dust down to the necessary levels. In order to make such a determination the plan proposes that a special pilot study be implemented, in the area, in the spring of 1980 to last through the entire 1980 street cleaning season. The results of this pilot study which will be available in the first part of 1981 will be used to determine what procedures should be adopted in the implementation of any expanded street cleaning program in the nonattainment area.

In regard to the 420 Kansas Avenue minitoring site, the plan proposes two independent approaches. One approach will include the use of an empirical model which will inventory all sources within a one mile radius of the monitoring site, using the same procedures that were used at the 3105 Fairfax Road monitoring site. This model will estimate the impact of various sources on the sampling location. The second approach noted in the plan will be to collect more extensive air quality and meteorological data at the monitoring site and by means of appropriate statistical analytical procedures, use such data to provide a better definition of the types and nature of sources that are impacting on the sampling location. These special sampling activities will be carried out over a period of eight months. During this period there is a possibility of a pilot study being implemented on the major source(s) identified to be contributing to the nonattainment problem.

Full-scale controls of these sources will be implemented by the end of 1982.

(3) Attainment Date Extension—Section 172(a)(2) authorizes extension of the attainment date to not later than December 31, 1987, for carbon monoxide and ozone, if the state demonstrates the standards cannot be obtained by December 31, 1982.

Of the three nonattainment areas under review, this provision applies to the Wyandotte and Johnson Counties ozone nonattainment area. However, as noted above, the state anticipates an extension is not necessary, since the state has demonstrated attainment of the ozone standard in those counties by the December 31, 1982 deadline.

(4) Emission Inventory—Section 172(b)(4) requires the plan to include a comprehensive, accurate, and current inventory of all sources of each pollutant for which an area is nonattainment. It also requires the inventory to be updated as frequently as necessary to assure reasonable further progress is being made to insure the standard is attained.

Kansas has an emissions inventory based on emissions from 1977 for the VOC sources in Wyandotte and Johnson Counties. As indicated in the February 11, 1980 proposed rulemaking (45 FR 9016, Col. 2), this inventory is acceptable to EPA. Also EPA believes the September 25, 1980 submission, revising

the inventory of the VOC sources to include cutback asphalt sources and other petroleum terminal and storage source, is acceptable.

The inventory of VOC sources in Douglas County covered by the CTGs issued by EPA through 1978, is not acceptable to EPA since it does not include cutback asphalt as a major VOC source. This deficiency is discussed further in Section D(1).

The state has submitted an emissions inventory for the Kansas City TSP nonattainment area based on emissions from 1976. EPA believes this inventory is acceptable.

(5) Reasonable Further Progress (RFP)—Section 172(b)(3) requires the state to demonstrate that it will make reasonable further progress toward attaining the standards by specific dates, including emission reductions which can be achieved by RACT.

Kansas has presented an acceptable RFP curve for the Wyandotte and Johnson Counties nonattainment area. Additional discussion of the RFP curve is provided in the February 11, 1980 proposal rulemaking (45 FR 9016).

As noted above in the General Discussion, a specific RFP demonstration does not have to be made for rural ozone nonattainment areas.

The state has presented for the Kansas City TSP SIP a linear RFP curve for monitoring sites 1, 2, 5 and 6 which predicts attainment of the TSP standard before the December 31, 1982 deadline. Based on the empirical modeling analysis that was used to demonstrate attainment at monitoring site 4, (3105 Fairfax Road) a nonlinear RFP curve, which reflects actual emission reductions that have or will occur as a result of stationary and nontraditional emission reductions, was used to demonstrate attainment of the TSP standard as expeditiously as practicable before the December 31, 1982 deadline. EPA believes this is an acceptable RFP demonstration.

(6) Margin of Growth—Section 172(b)(5) requires the plan to expressly identify and quantify the emissions, if any, which will be allowed to result from the construction and operation of new or modified major stationary sources in a nonattainment area. In addition, the growth in emissions from mobile sources and new minor stationary sources must be considered in this analysis.

EPA believes the state has adequately considered the growth the VOC emissions from the new "area" sources (those other than stationary point sources) for a ten year period in the Wyandotte and Johnson Counties SIP submittal. The projection also includes specific allowances for additional VOC emissions from a manufacturing plant proposed for Johnson County. If this plant or any other new plants were constructed, the new source(s) would be subject to the new source review permit requirements of the plan and could be approved to the extent that the additional proposed emissions from it would not interfere with RFP and attainment of the ozone standard. EPA's comments on the development on this element of the revised SIP submission are discussed further in the February 11, 1980, (45 FR 9017).

As noted above in the General Discussion, no margin of growth or offsets are required for rural ozone nonattainment areas.

The plan states that emission offsets will be requried to accommodate any new major source construction or modifications in the TSP nonattainment area. This is acceptable to EPA.

(7) Preconstruction Review Permits—Part D, Section 172(b)(6) of the CAA requires that the plan include a permit program for the construction and operation of new or modified major stationary sources in accordance with the requirements of Section 173 of the CAA.

In the September 17, 1979 submittal, the state proposes new amendments to the Kansas air quality regulations (Regulations 28-19-7, 28-19-8, and 28-19-14) to carry out the provisions of Section 173. As explained above in the General Discussion, early in 1980 the state decided to revise the proposed regulations in keeping with the then-pending changes in EPA requirements for Section 173 of the CAA and with EPA's comments in the February 11, 1980 proposed rulemaking before proceeding with adopting the proposed regulations as permanent amendments to the Kansas air quality regulations. On September 22, 1980, the proposed regulation (28-19-16 through 16th) was submnitted to replace the three proposed new source review permit regulations included in the September 17, 1979 submittal. The following summarizes EPA's comments on the September 22, 1980 submission.

The regulation (28-19-16 through 16m) generally follows the revised requirements for a preconstruction review permit program (40 CFR 51.18(j)), as amended August 7, 1980, Federal Register (45 FR 52676). At the public hearing on October 27, 1980, the State stated it proposed the following minor changes in the text in order to clarify the proposed new source review permit regulation. First, the definition of actual emissions, which is given in subsection (16a)(a), has been revised to clarify that actual emissions will be presumed to be equal to specific limitations as established for an individual source under the provisions of the Kansas air quality regulations 28-19-13 or 28-19-16b or the Federal regulation 40 CFR 52.21(i), as amended August 7, 1980. Second, the definition of major modification, which is given in subsection (16a)(q), has been revised to define only modification and a new definition of major modification has been added to the list of definitions under subsection (16a). And finally, since net emissions increase is defined in subsection (16a), subsection (16c) has been modified to focus on creditable emission reductions allowed when determining emission reductions in relation to the modification or reconstruction of a major stationary source issued a permit under the provisions of this regulation. These changes are acceptable to EPA.

There is a deficiency in subsection (16h) which must be corrected before EPA can fully approve this regulatory element of the plan. The deficiency involves the requirement of Section 173(3) of the CAA. This subsection requires that before a permit is issued, the owner of the source must demonstrate that all major stationary sources owned or operated by the permit applicant, in the state, are subject to emission limitations and are in compliance with all emission limitations and standards under the CAA. The Kansas plan states that the Kansas Attorney General's Office has determined that this requirement cannot be adopted at this time, without changes in the state's statutory enabling authority. Thus, the proposed regulation, subsection (16h), requires only that other sources owned or operated by the permit applicant must be in compliance with state regulations.

Since this deficiency was also contained in the earlier proposed regulation (28-19-14) dealing with Section 173(3) of the CAA, on which the February 11, 1980 proposed rulemaking was based, EPA's comments in that proposed rulemaking are also appropriate to the discussion of subsection (16h). This deficiency is discussed further in Section D(2).

Since a specific attainment demonstration is not required for the Douglas County ozone SIP, the only specific requirements in Section 173 which must be met for new sources in this nonattainment area are the requirements of Section 173(2) and 173(3). These subsections require that a permit applicant demonstrate it will meet the lowest achievable emission

rate as defined in Section 171(3) and that all other sources owned or operated by the applicant in the state comply with emission standards required by the CAA. As noted above, the revised new source review permit program does not meet the requirements of Section 173(3) of the CAA. This deficiency is discussed further in Section (D)(2).

(8) Reasonably Available Control Measures—Section 172(b)(2) requires implementation of all reasonably available control measures as expeditiously as practicable. Under this provision, RACT is required for stationary sources. The Wyandotte and Johnson Counties submission requires RACT for major VOC sources covered by CTGs that EPA issued by January 1978 and contains a commitment by the state to adopt and submit additional VOC regulations for any sources covered by CTGs issued in the future.

The CTGs provide information on available air pollution control techniques, and contain recommendations of what EPA calls the "presumptive norm" for RACT. Based on the information in the CTGs, EPA believes that the submitted regulations represent RACT, except as noted below. On the points noted below, the state regulations are not supported by the information in the CTG, and the state must provide an adequate demonstration that its regulations represent RACT, amend the regulations to be consistent with the information in the CTGs, or show that the allowable emissions with the regulation are within five percent of the CTG allowable emissions.

As noted in the February 11, 1980 proposed rulemaking, the September 17, 1979 submission contains proposed VOC regulations for sources covered by CTGs that EPA issued by January 1978. But, it is deficient regarding a VOC regulation for control of emissions from cutback asphalt sources in the Wyandotte and Johnson Counties ozone nonattainment area. In addition, the September 17, 1979 submission is deficient regarding VOC regulations for sources covered by CTGs issued since January 1978.

With one exception, these two deficiencies are corrected by the September 25, 1980 submission of VOC regulations (28-19-61 Definitions, 28-19-62 Testing Procedures, 28-19-63 Automobile and Light Duty Truck Surface Coating, 28-19-64 Bulk Gasoline Terminals, 28-19-65 Petroleum Liquid Storage Tanks, 28-19-66 Petroleum Liquid Storage in External Floating Roof Tanks, 28-19-67 Petroleum Refineries, 28-19-68 Leaks from Petroleum Refinery Equipment, and 28-19-69 Cutback Asphalt) which the state adopted as temporary regulations on September 10, 1980. The regulations exclude control of VOC emissions from tank trucks serving a bulk petroleum terminal. Tank trucks loading gasoline at regulated terminals must be essentially leakless and equipped for vapor collection so that vapors generated in the tank trucks during loading operations are vented to the bulk terminal vapor control system. This deficiency is discussed further in Section D(3).

Kansas' plan exempts methyl chloroform (1,1,1, trichloroethane) and methylene chloride. On May 16, 1980, EPA published a clarification of Agency policy concerning the control of methyl chloroform and methylene chloride in ozone SIPs (45 FR 32424). EPA explains that it cannot approve or enforce controls on either of these two compounds as part of a Federally enforceable ozone SIP because current information indicates that neither compound is an ozone precursor. Consequently, EPA is not disapproving Kansas' exemption of methyl chloroform and methylene chloride.

This policy is in no way an expression of EPA's view on the desirability of controls on these compounds. States retain the authority to control these compounds under the authority reserved to them in Section 116 of the CAA. In addition, state officials and sources should be advised that there is a strong possibility of future regulatory action by EPA to control emissions of these two compounds. (See, e.g., Proposed New Source Performance Standards for Organic Solvent Cleaners, 45 FR 39766, June 11, 1980.)

Concerning the Douglas County ozone SIP, the state indicated in the October 22, 1979 submittal that there were no point sources in the nonattainment area, covered by current CTG documents, which have the potential to emit more than 100 tons per year of VOC. In a February 22, 1980 telephone conversation, the state told EPA that cutback asphalt sources in Douglas County constitute a major source of VOC. The state has adopted a temporary regulation covering such sources and included it in its September 22, 1980 submittal which is discussed previously.

The CAA requires that a SIP provide for implementation of RACT for stationary sources of TSP to assure reasonable further progress and attainment of the primary standard no later than December 31, 1982. The KDHE has evaluated the control being provided to stack emissions from all major sources in the nonattainment area and has determined that all sources can be considered to be controlled at least at the RACT level.

This determination is generally acceptable to EPA; however, additional information regarding the stationary sources which have no controls has been requested by EPA. This deficiency is discussed further in Section D(3).

(9) Inspection and Maintenance—Section 172(b)(11) and (c) require a vehicle emissions control inspection/maintenance (I/M) program for ozone or carbon monoxide SIPs with attainment dates after 1982. Since the plan shows that the NAAQS for ozone will be attained before the December 31, 1982 deadline, an automobile I/M program will not be required in the Wyandotte and Johnson Counties nonattainment area. An I/M program is not required for either a rural ozone or a TSP nonattainment area.

(10) Transportation Control Measures—Section 172(b) (2) and (11) requires transportation control measures for ozone and carbon monoxide SIPs as necessary to attain the NAAQS by the required deadline. Since attainment of the ozone standard can be achieved by the projected reduction from the FMVCP and the control of major VOC sources, transportation control measures (TCMs) will not be required for the Wyandotte and Johnson Counties ozone SIP. TCMs are not required for consideration in either a rural ozone or TSP SIP.

(11) Enforceability of the Regulations—Section 172(b)(10) requires written evidence that all necessary measures have been adopted as legal requirements and that the agencies responsible are committed to their implementation and enforcement.

The State Air Quality Control Act gives the Secretary of Health and Environment the authority to adopt, amend and repeal rules and regulations implementing and consistent with provisions of the Act. Other state statutes provide that such rules and regulations may be adopted on either a permanent or temporary basis.

Permanent rules and regulations must be submitted to the state's Revisor of Statutes between May 1 and December 31 and become effective, as filed, on the following May 1, unless they are modified or rejected by the legislature prior to that date. Temporary rules and regulations become effective upon filing and remain effective until May 1 of the year following their filing.

The major statutory restraint relating to temporary rules and regulations is that a temporary rule cannot be effective after April 30 of the year succeeding the year in which a temporary rule is filed with the Revisor of Statutes. In addition, a permanent

rule cannot be effective until after April 30 of the year following the year in which the rule is filed.

As noted above in Section B (7) and (8), neither the VOC nor the new source permit review regulations have been adopted as permanent regulations. The revised VOC regulations which Kansas submitted to EPA on September 25, 1980 for inclusion in the plan are presently temporary regulations. The state has filed them with the state's Revisor of Statutes in accordance with the state's statutes so that they may be adopted as permanent regulations by May 1, 1981. Regarding the new source review permit regulation, the state submitted only a proposed regulation to EPA on September 22, 1980. But, the state has indicated it is proceeding with the adoption of this regulation as a temporary one by December 31, 1980 and as a permanent one by May 1, 1981.

Assuming the legislature does not exercise its option to modify or reject either the VOC regulations or the new source review permit regulation, they will become permanent regulations by May 1, 1981. Then, the state plans to submit them to EPA as part of the plan. However, since the regulations are presently not enforceable as permanent regulations, the regulatory portion of the plan is deficient. This is discussed further in Section D(3).

The Kansas City TSP plan states in Section VI D, Control Strategy Discussion, that the decrease in total emissions of TSP will be aided by an estimated 46 percent in point source emissions due to installation of "currently scheduled control systems and shut-down of several facilities which were operated in 1976." The plan does not clearly indicate that the projected reduction is the result of enforceable regulatory requirements. This deficiency is discussed further in Section D(4).

(12) Commitment to Resources—Section 172(b)(7) requires the state to identify and commit the personnel and financial resources necessary to carry out the plan provisions. EPA has determined that the Wyandotte and Johnson Counties ozone, the Douglas County ozone, and the Kansas City TSP SIP contain adequate commitments to the resources necessary to carry out the plan revisions.

(13) Commitment to Comply with Schedules—Section 172(b)(8) requires the plan to contain emission limitations, schedules of compliance, and other measures as may be necessary to meet the requirements of Section 172. EPA has determined that the Wyandotte and Johnson Counties ozone, the Douglas County ozone, and Kansas City TSP plan contains evidence that the state and other governmental bodies are committed to implement the appropriate elements of the plan.

(14) Public, Local Government and State Involvement—Section 172(b)(9) requires evidence of involvement and consultation of the public, local government, and state legislature in the planning process. The section also requires an identification and analysis of various effects of the plan and a summary of public comment on the analysis.

As stated in the February 11, 1980 proposed rulemaking (45 FR 9017, Col. 3), the Wyandotte and Johnson Counties ozone SIP submission is deficient regarding this requirement. This deficiency has been adequately addressed by the state's March 10, 1980 submission of the requested documentation.

Concerning the Douglas County ozone plan, the state has not demonstrated that it has met the requirements of Section 172(b)(9). This deficiency is discussed further in Section D(5).

EPA has determined that the Kansas City TSP plan contains evidence of involvement and consultation of the public, local government and state legislature in the planning process and an identification and analysis of the air quality, health, welfare, economic, energy and social effects of the revision and a summary of public comments on the analysis.

Issues and proposed action. A number of issues were identified above as issues which might interfere with plan approval. These will be discussed individually in Section D, Approvability Issues, and each one will have its own proposed action. For items which were discussed above, and which are not specifically identified as approvability issues, EPA is proposing to approve those elements as meeting the requirements of the CAA.

C. Other Provisions

The CAA, as amended in 1977, provides that requirements other than those in Part D must be met. Section E of the February 11, 1980 proposed rulemaking discusses whether or not the Kansas revision addresses these non-Part D items and proposes EPA action concerning each non-Part D requirement for the Kansas SIP. The proposals in that notice concerning the non-Part D items are reproposed herein. Additional non-Part D issues are discussed below.

On February 5, 1980, the state submitted a new section (Section XIII A) to its SIP dealing with intergovernmental cooperation as required by Section 121 of the CAA.

The plan notes that an inventory of area speical interest groups interested in air quality has ben compiled and will be utilized to insure public and interest group involvement. The plan also notes that a variety of methods are available to provide public information to interested groups.

Proposed action. EPA proposes no action concerning this issue at this time.

The proposed malfunction regulation listed in Appendix DC-2 of the Kansas City TSP plan states that "abnormal operating conditions resulting from malfunction, breakdown, or necessary repairs of control devices or process equipment and appurtenances that are determined by the department to be unavoidable and not the result of negligence which cause emissions in excess of the allowable contaminant emission rate prescribed in these regulations shall not be deemed violations, provided that * * *" the source abides by a set of four conditions (i.e., notification of the department, expeditious repairs, the number of malfunction occurrences is not deemed to be excessive, and KDHE is notified when corrective measures have been accomplished). To the extent that the regulation exempts those malfunctions which cause excess emissions, it does not meet EPA's requirement that all malfunctions which cause excess emissions are to be considered as violations and require the department to determine if enforcement action against the source, should be taken (42 FR 21472, April 27, 1977).

Proposed action. EPA expects the state to submit an acceptable malfunction regulation, but we are proposing no action at this time.

D. Approvability Issues

This section contains a discussion of the issues identified above which could affect approval of the plan. The discussion includes a general description of the deficiency or issue and possible corrective actions. This section also sets forth alternative approaches to final rulemaking with respect to these issues. In some cases, EPA proposes to conditionally approve the plan where there are minor deficiencies and the state agrees to submit corrections by specified deadlines. This notice solicits comments on what items should be conditionally approved and on what deadlines should apply. A conditional approval will mean that the restrictions on new major source construction will not apply unless the state fails to submit the necessary plan revisions by the scheduled deadline, or unless the revision is not approved by EPA.

(1) Emission Inventory—As noted in Section B(4), on October 22, 1979, the state submitted an inventory of all VOC point sources located in Douglas County, which are covered by CTG documents issued by EPA by January 1978. Since making this submission the state has notified EPA that cutback asphalt sources, a category covered by the CTGs, is a major source of VOC emissions in Douglas County. The October 22, 1979 SIP submittal did not indicate that cutback asphalt was a source of VOC emissions in this area.

Proposed action. On October 10, 1980, EPA met with the state to discuss the approvability issues for the plan. The state indicated it will submit the revised emissions inventory for Douglas County to EPA by the close of the public comment period. EPA proposes to approve the emission inventory if the state submits an acceptable revised inventory prior to the close of the public comment period.

(2) Preconstruction Review Permits—As noted above in Section B(7) the September 22, 1980 submission is dificient.

(2a) Minor changes in the text of the regulation have been worked out with the state during the past several weeks. These changes are summarized above in Section B(7). At the public hearing on October 27, 1980, the state presented these changes and indicated it would revise the text accordingly prior to adopting and filing it with the state's Revisor of Statutes. These changes should facilitate EPA's approval of the proposed regulation.

Proposed action. EPA proposes to conditionally approve the new source review permit regulation if the state makes the change in the text, if the state makes the revisions necessary to conform its regulation to 40 CFR 51.18(j) as discussed below in Section D(2b), and if the state submits a final and enforceable regulation prior to May 1, 1981 as discussed below in Section D(4b).

(2b) As discussed above in Section B(7), subsection (16h) of the proposed regulation is deficient regarding the requirement of Section 173(3) of the CAA, because it only requires compliance of other sources with state emission standards rather than all standards under the CAA.

At the October 10, 1980 meeting, the state indicated it will work for the adoption of the legislation necessary to enable the state to revise subsection (16h) to comply with Section 173(3) of the CAA. The state expects passage of this legislation on or before April 30, 1981 and the regulation revised and filed with the state's Revisor of Statutes by July 1, 1981. Then, in keeping with the adoption procedures for amending the state air quality regulations, the state anticipates the revised regulation will become permanent by May 1, 1982. This assumes the legislature does not modify or reject the revised regulation. The state also agreed for the interim period, before the requirements of Section 173(3) of the CAA are adopted as a permanent part of the state's new source review permit regulation, to notify EPA when a new source permit applicant is an owner or operator of other sources in the state which are not in compliance with a requirement of the CAA.

Proposed action. EPA proposes to conditionally approve this regulatory portion of the plan, on the condition that the state commit to this schedule and the interim action. As well, the state must revise the text of the regulation as discussed above in Section D(2a) and adopt the regulation as a permanent, fully enforceable regulation as discussed below in Section D(4b).

(3a) Reasonably Available Control Measures—As discussed above in Section B(8), a regulation covering leaks and the vapor recovery system from tank trucks serving bulk petroleum terminals is needed. The regulation should include a definition of a leak tight tank truck as well as a description of the inspection procedures and method for identifying leaks.

At the October 10, 1980 meeting, the state indicated it will adopt and file with the state's Revisor of Statutes by July 1, 1981, a regulation covering tank trucks serving bulk petroleum terminals. Then, in keeping with regulatory amendment procedures, the regulation should become permanent by May 1, 1982. This schedule is acceptable to EPA.

Proposed action. EPA proposes conditionally to approve the VOC regulatory portion of the plan, on condition that the State adopt the temporary VOC regulations as permanent ones by May 1, 1981 and amend the regulations to cover tank trucks in accordance with the above schedule.

(3b) Reasonable Available Control Measures—As noted above in Section D(8), the state has evaluated the controls being provided to stack emissions from all major sources in the Kansas City TSP nonattainment area and has determined that all sources can be considered to be controlled at least at the RACT level. However, in Appendix DK, several sources are listed as having no particulate control equipment. EPA requests additional information from the state on these determinations. EPA believes further engineering evaluation of the uncontrolled sources and of possible controls may be appropriate. This issue of the RACT determination constitutes a minor deficiency, since the state expects the TSP standard will be attained by December 31, 1982 through emission limitation requirements on stationary sources and the control of nontraditional sources.

Proposed action. EPA proposes to conditionally approve this element of the Kansas City TSP SIP with the state's commitment to provide additional information regarding its determination of those uncontrolled sources being at RACT and to take the appropriate follow up action following the further investigation of these uncontrolled sources. EPA has requested the state to commit to this condition by the close of the public comment period.

(4) Enforceability of the Regulations—As noted above in Section B(11) the SIP submission contains four deficiencies regarding the enforceability of the regulatory portion of the SIP.

(4a) As noted in Sections B(7), (8) and (11), the state has not submitted as permanent regulations the revised VOC regulations which were adopted as temporary regulations on September 10, 1980 and the new source review permit regulation which the state expects to adopt as a temporary regulation by December 31, 1980. Under state Statute, regulations adopted as temporary regulations are fully enforceable until April 30 of the year succeeding the year in which a temporary rule is filed with the Revisor of Statutes. Assuming the new source review permit regulation is adopted as a temporary regulation, the regulatory portion of the plan is only enforceable until April 30, 1981. For EPA to approve the plan, these temporary regulations must be adopted as permanent regulations so that they continue in effect past the April 30 deadline.

Proposed action. With the State's commitment to adopt the regulations as permanent by May 1, 1981 and to correct the deficiencies regarding tank trucks as discussed in Section D(3) and the requirement of Section 173(3) of the CAA as discussed in Section D(2), EPA proposed to conditionally approve the regulatory portions of the plan submission.

(4b) As discussed in Section B(7) and D(2), the subsection (16h) of the proposed new source review permit regulation does not meet the Section 173 (3) requirement of the CAA. The state has indicated that legislation to correct this deficiency will be placed on the legislature's agenda for action during the 1981 session. Session D(2b) contains additional information on this issue.

Such action is in keeping with option A which is discussed in the February 11, 1980 proposed rulemaking under Section D(7) and F(1c) and (3).

Proposed action. EPA proposes to conditionally approve the new source review permit regulation with respect to Section 172(b)(6) of the condition that the state revise the regulation according to the schedule given above in Section D(2b) to meet the requirements of Section 173(3) of the CAA. In addition, the state must comply with the conditions set forth in Section D(2a) and (4a).

(4c) As noted above in section B(11), the Kansas City TSP plan takes credit for an estimated 46 percent decrease in TSP emissions from point sources due to installation of currently scheduled control systems and shut-down of several facilities which were operating in 1976. The plan does not clearly indicate that the projected reduction is the result of enforceable regulatory requirements. The State has indicated that the scheduled controls are required by legally enforceable compliance schedules, but such schedules have not been submitted as part of the plan. Before the attainment demonstration can be approved, EPA will require that the state demonstrate in the SIP that all the projected reductions are the result of enforceable regulatory requirements.

Proposed action. At the October 10, 1980, meeting, the state indicated it will submit the requested information by the close of the public comment period. EPA proposes to approve this element if the state submits enforceable compliance schedules.

(5) Public, Local Government and State Involvement—As noted above in Section (B)(14), the Douglas County ozone SIP does not contain evidence of involvement and consultation of the public, local government and state legislature in the planning process. Additionally the Douglas County ozone submission is deficient regarding an identification and analysis of the air quality, health, welfare, economic, energy and social effects of the revision and a summary of public comments on the analysis.

Proposed action. At the October 10, 1980, meeting the state indicated it sought public input to developing the Douglas County ozone submission. The state agreed to provide EPA with information on this effort before the close of the public comment period. EPA proposes to approve with respect to the requirements of Section 172(b)(9), if the states submits documentation of compliance with this requirement for the Douglas County plan, prior to the close of the public comment period.

E. Conclusion

The Administrator's decision to approve or disapprove the proposed revisions will be based on the comments received and on a determination of whether or not the amendments meet the requirements of Part D, Section 110(a)(2) of the CAA and 40 CFR Part 51, Requirements for Preparation, Adoption and Submittal of Implementation Plans.

Deficiencies in the state plan that are not corrected may be cause for disapproval of the proposed revisions to the SIP.

The measures proposed today, if finally approved by EPA, will be in addition to, and not in lieu of, existing state regulations. The present emission control regulations will remain applicable and enforceable to prevent a source from operating without controls or under less stringent controls, while it is moving towards compliance with the new regulations. Failure of a source to meet applicable pre-existing regulations will result in appropriate enforcement action, including assessment of noncompliance penalties. Furthermore, if there is any instance of delay or lapse in the applicability of the new regulations, because of a court order for any other reasons, the pre-existing regulations will be applicable and enforceable.

This notice of proposed rulemaking is proposed to advise the public of EPA's intended action on the Kansas SIP submission. EPA requests comments on all aspects of the Kansas SIP submission, not just those specifically identified above.

Comments received within 30 days will be considered in EPA's final decision on the SIP. EPA believes the available period for comments is adequate because:

(1) The SIP has been available for inspection and comment since April 4, 1980, June 2, 1980, and September 24, 1980, so that the total comment period is more than 60 days; and

(2) EPA has a responsibility under the CAA to take final action as soon as possible after July 1, 1979, on that portion of the SIP that addresses the Part D requirements.

Under Executive Order 12044, EPA is required to judge whether a regulation is "significant" and, therefore, subject to the procedural requirements of the order, or whether it may follow other specialized development procedures. EPA labels these other regulations "specialized". EPA has determined that this is a specialized regulation not subject to the procedural requirements of Executive Order 12044.

(Section 110 of the Clean Air Act, as amended)

Dated: November 21, 1980.

William Rice,

Acting Regional Administrator.

[FR Doc. 80-38339 Filed 12-10-80; 8:45 am]

BILLING CODE 6560-01-M

---

40 CFR Part 720

[OPTS-50018A; TSH-FRC 1698-4]

Premanufacture Notification Requirements and Review Procedures; Extension of Comment Period on the Proposed Economic Impact and Draft Regulatory Analyses

AGENCY: Environmental Protection Agency (EPA).

ACTION: Proposed rule related notice.

SUMMARY: This notice grants a 60-day extension for commenting on the ICF Incorporated proposed Economic Impact Analysis of the Premanufacture Notification Rules proposed under section 5 of the Toxic Substances Control Act (TSCA). The comment period on the draft of EPA's Regulatory Analysis of the section 5 rules is also extended 60 days.

DATE: Written comments should be submitted by February 13, 1981.

ADDRESS: All written comments should bear the identifying notation (OPTS-50018) and be addressed to: Document Control Officer (TS-793), Office of Pesticides and Toxic Substances, Environmental Protection Agency, Rm. E-447, 401 M St. S.W., Washington, D.C. 20460.

FOR FURTHER INFORMATION CONTACT: John B. Ritch, Jr., Director, Industry Assistance Office (TS-799), Office of Toxic Substances, Environmental Protection Agency, Rm. E-429, 401 M St. SW., Washington, D.C. 20445, Toll Free: 800-424-9060, In Washington: 554-1404.

A copy of the draft Regulatory Analysis and the proposed Economic Impact Analysis is available for public review in each of the ten regional offices of EPA.

SUPPLEMENTARY INFORMATION: EPA published a notice announcing the availability of the proposed Economic Impact Analysis and the draft Regulatory Analysis for the section 5 rule of TSCA in the November 13, 1980, issue of the Federal Register (45 FR 74945). Since all of the issues discussed in these analyses have been subject to extensive comments by the public over the past two years, EPA believed that a 30-day period would be sufficient to comment on these analyses. However, EPA has received a written request from

the Chemical Manufacturers Association (CMA) for a 120-day comment period. CMA stated that the 30-day period does not allow sufficient time for an adequate review of the analyses in light of their size and scope. In response to this request, EPA is extending the comment period an additional 60 days. EPA believes that a 60-day extension is sufficient for CMA and other interested parties to provide detailed comments, particularly because the methodology for the Economic Impact Analysis was made available for comment on June 10, 1980 (45 FR 39450). However, as stated in the notice of availability, commenters on the proposed Economic Impact Analysis and the draft Regulatory Analysis should not submit or repeat in detail previous comments on the proposed section 5 rules. Comments already submitted on these rules will continue to be a part of the official rulemaking record.

Dated: December 3, 1980.

Steven D. Jellinek,

Assistant Administrator for Pesticides and Toxic Substances.

[FR Doc. 80-38453 Filed 12-10-80; 8:45 am]

BILLING CODE 6569-31-M

DEPARTMENT OF TRANSPORTATION

Coast Guard

46 CFR Parts 33, 75, 78, 94, 97, 108, 160, 167, 192, 196

[CGD 79-160]

Lifesaving Equipment; Line Throwing Appliances, Required Equipment on Merchant Vessels

AGENCY: Coast Guard, DOT.

ACTION: Proposed Rule.

SUMMARY: The Coast Guard proposes to delete the requirement for carriage of line-throwing appliances onboard vessels in ocean and coastwise service on other than an international voyage. With the increased capability and availability of coastal rescue and salvage services that provide the proper towing equipment, and advances in ship to shore communications, there no longer exists a need to carry and maintain line-throwing appliances on these vessels. This proposed rule will reduce the operating cost of these vessels and the regulations in Title 46 of the Code of Federal Regulations will continue to be compatible with the Safety of Life at Sea (SOLAS) Convention, 1974.

DATES: Comments must be received on or before March 11, 1981.

ADDRESSES: Comments should be mailed to Commandant (G-CMC/24), (CGD 79-160), U.S. Coast Guard, Washington, D.C. 20593. Comments may be delivered to and will be available for inspection or copying between the hours of 7:00 a.m. and 5:00 p.m., Monday through Thursday, at the Marine Safety Council (G-CMC/24), Room 2418, U.S. Coast Guard Headquarters, 2100 Second Street, S.W., Washington, D.C.

FOR FURTHER INFORMATION CONTACT: LTJG Kevin C. OLDS, Commandant (G-MVI-2/24), U.S. Coast Guard Headquarters, Room 2612, 2100 Second Street, S.W., Washington, D.C. 20593. (202) 426-2190.

SUPPLEMENTARY INFORMATION: The public is invited to participate in this rulemaking by submitting written views, data, or arguments. Comments should include the name and address of the person making them, identify this notice (CGD 79-160) and the specific section to which each comment applies, and give reasons for the comments. If an acknowledgement is desired, a stamped, self addressed postcard or envelope should be enclosed. All comments received before the expiration of the comment period will be considered before final action is taken on this proposal.

No public hearing is planned, but one may be held if written requests for a hearing are received from interested persons having a genuine issue to raise and it is determined that the opportunity to make oral presentations will be beneficial.

DRAFTING INFORMATION: The principal persons involved in drafting this proposal are: LTJG Kevin OLDS, Project Manager, Office of Merchant Marine Safety, and LCDR Jack ORCHARD, Project Attorney, Office of the Chief Counsel.

Discussion of Proposed Rules

A statutory requirement (46 USC 481) that all steam vessels in ocean or coastwise service carry a line-throwing appliance was established over a century ago. Regulations implementing that requirement have been in effect since then. However, in 1959 this statute was amended and the specific requirement for a line-throwing appliance was deleted and replaced by a requirement to carry "such lifesaving equipment as specified in rules and regulations promulgated by the Coast Guard." In its rationale Congress cited the fact that the specific requirements of the law were "antiquated and preclusive", being superseded by the more current Safety of Life at Sea (SOLAS) Convention.

Every SOLAS convention since 1948 has required an approved line-throwing appliance on international voyages of all passenger vessels, and on international voyages of mechanically propelled cargo vessels, not in passenger service, of 500 gross tons and over.

Present day increases in capabilities and availability of coastal rescue and towing services that provide the proper equipment, and advances in ship to shore communications have all but eliminated the practice of merchant vessels in coastwise service towing one another. In consideration of this fact and the amendment to 46 USC 481, the requirement to carry a line-throwing appliance is being deleted for all vessels in ocean or coastwise service on other than an international voyage. However, because line-throwing appliances are devices used for "the better security of life," they must be of an approved type when carried on inspected vessels as optional equipment.

The format of the regulations has been revised. In order to avoid unnecessary duplication, the list of auxiliary equipment has been removed from the various subchapters. The auxiliary equipment which vessels must maintain in addition to the basic device, is approved as a package with the line-throwing appliance and is listed in the Subchapter Q specifications.

In further consideration of changes in technology, Lyle gun type line-throwing appliances will no longer be authorized for carriage. Lyle gun type line-throwing appliances have not been approved as new or replacement equipment since 1952. The device is antiquated, can be dangerous to operate, and does not provide the equivalent accuracy and reliability available with more modern types of Coast Guard approved line-throwing devices.

This proposed rulemaking has been reviewed under the Department of Transportation's "Policies and Procedures for Simplification, Analysis, and Review of Regulations" (DOT Order 2100.5) and has been determined to be non-significant. The Coast Guard has determined that this regulation will have minimal environmental and economic impact and that a full evaluation is not required. The deletion of this carriage requirement will result in a net savings of insignificant proportions when compared with the total cost of outfitting a vessel. Vessels which currently are required to carry these devices will probably continue to carry them as optional equipment.

In consideration of the foregoing, it is proposed to amend Title 46 of the Code of Federal Regulations as follows:

PART 33—LIFESAVING EQUIPMENT

1. By revising Subpart 33.55 to read as follows:

Subpart 33.55—Line-Throwing Appliances

Sec.
33.55-1 Line-Throwing applicance—T/OC.
33.55-5 Accessibility—T/OC.
33.55-10 Auxiliary lines—T/OC.
33.55-15 Service—T/OC.

Subpart 33.55—Line-Throwing Appliances

§ 33.55-1 Line-throwing appliances—T/OC.

(a) *Mandatory.* All vessels of 50 gross tons or over, on an international voyage, shall carry an impulse-projected rocket type line-throwing appliance that is approved under Subpart 160.040, and auxiliary equipment which is listed in § 160.040-4.

(b) *Optional.* All vessels of 500 gross tons or over, on other than an international voyage, and all vessels 150 gross tons or over and less than 500 gross tons may carry:

(1) A shoulder gun which is approved under Subpart 160.031 and auxiliary equipment which is listed in § 160.031-4; or

(2) An impulse-projected rocket appliance which is approved under Subpart 160,040, and auxiliary equipment which is listed in § 160.040-4.

§ 33.55-5 Accessibility—T/OC.

The line-throwing appliance and its auxiliary equipment shall be readily accessible for use. No part of this equipment shall be used for any other purpose.

§ 33.55-10 Auxiliary lines—T/OC.

(a) One auxiliary line must be carried for each impulse-projected rocket type line throwing appliance required or allowed by this subpart that is fabricated of—

(1) Manila and is at least 450m (1,500 ft.) long and 7.5cm (3 in.) or more in circumference; or

(2) A synthetic material and is at least 450m (1,500 ft.) long and is certified by the manufacturer to have a breaking strength of at least 40KN (9,000 lb.) and inhibited to resist the effects of ultraviolet light.

(b) One auxiliary line must be carried for each shoulder gun type line-throwing appliance allowed by this subchapter that is fabricated of—

(1) Manila and is at least 150m (500 ft.) and 7.5cm (3 in.) or more in circumference; or

(2) A synthetic material and is at least 150m (500 ft.) and is certified by the manufacturer to have a minimum breaking strength of at least 40KN (9,000 lb.) and inhibited to resist the effects of ultraviolet light.

§ 33.55-15 Service—T/OC.

Service use of rockets shall be limited to a period of 4 years from date of manufacture, and replacement of outdated items shall be made at the first port of arrival in the United States where such rockets are available, and in all cases within 12 months after the date of expiration.

Note.—In firing the line-throwing appliance, the operating instructions and safety precautions furnished by the manufacturer should be followed.

PART 75—LIFESAVING EQUIPMENT

2. By revising Subpart 75.45 to read as follows:

Subpart 75.45—Line-Throwing Appliances

Sec.
75.45-1 Line-throwing appliances.
75.45-5 Accessibility.
75.45-10 Auxiliary lines.
75.45-15 Service.

Subpart 75.45—Line-Throwing Appliances

§ 75.45-1 Line-throwing appliances.

(a) *Mandatory.* All vessels on an international voyage shall carry an impulse-projected rocket type line-throwing appliance that is approved under Subpart 160.040, and auxiliary equipment which is listed in § 160.040-4.

(b) *Optional.* All vessels of 150 gross tons or over, on other than an international voyage, certificated for ocean or coastwise service, may carry:

(1) A shoulder gun which is approved under Subpart 160.031 and auxiliary equipment which is listed in § 160.031-4; or

(2) An impulse—projected rocket appliance which is approved under Subpart 160.040, and auxiliary equipment which is listed in § 160.040-4.

§ 75.45-5 Accessibility.

The line-throwing appliance and its auxiliary equipment shall be readily accessible for use. No part of this equipment shall be used for any other purpose.

§ 75.45-10 Auxiliary lines.

(a) One auxiliary line must be carried for each impulse-projected rocket type line throwing appliance required or allowed by this subpart that is fabricated of—

(1) Manila and is at least 450m (1,500 ft.) long and 7.5 cm (3 in.) or more in circumference; or

(2) A synthetic material and is at least 450m (1,500 ft.) long and is certified by the manufacturer to have a breaking strength of at least 40KN (9,000 lb.) and inhibited to resist the effects of ultraviolet light.

(b) One auxiliary line must be carried for each shoulder gun type line-throwing appliance allowed by this subchapter that is fabricated of—

(1) Manila and is at least 150m (500 ft.) and 7.5cm (3 in.) or more in circumference; or

(2) A synthetic material and is at least 150m (500 ft.) and is certified by the manufacturer to have a minimum breaking strength of at least 40KN (9,000 lb.) and inhibited to resist the effects of ultraviolet light.

§ 75.45-15 Service.

Service use of rockets shall be limited to a period of 4 years from date of manufacture, and replacement of outdated items shall be made at the first port of arrival in the United States where such rockets are available, and in all cases within 12 months after the date of expiration.

Note.—In firing the line-throwing appliance, the operating instructions and safety precautions furnished by the manufacturer should be followed.

PART 78—OPERATIONS

§ 78.17-40 [Amended]

3. By amending § 78.17-40 by deleting subparagraph (a)(3).

PART 94—LIFESAVING EQUIPMENT

4. By revising Subpart 94.45 to read as follows:

Subpart 94.45—Line-throwing Appliances

Sec.
94.45-1 Line-throwing appliances.
94.45-5 Accessibility.
94.45-10 Auxiliary lines.
94.45-15 Service.

Subpart 94.45—Line-Throwing Appliances

§ 94.45-1 Line-throwing appliances.

(a) *Mandatory.* All mechanically propelled vessels of 500 gross tons or over, on an international voyage, shall carry an impulse-projected rocket type line-throwing appliance that is approved under Subpart 160.040, and auxiliary equipment which is listed in § 160.040-4.

(b) *Optional.* All mechanically propelled vessels of 500 gross tons or over, on other than an international voyage, certificated for ocean or coastwise service and all mechanically propelled vessels of 150 gross tons or over and less than 500 gross tons, certificated for ocean and coastwise service, may carry:

(1) A shoulder gun which is approved under Subpart 160.031 and auxiliary equipment which is listed in § 160.031–4; or

(2) An impulse-projected rocket appliance which is approved under Subpart 160.040, and auxiliary equipment which is listed in § 160.040–4.

§ 94.45-5 Accessibility.

The line-throwing appliance and its auxiliary equipment shall be readily accessible for use. No part of this equipment shall be used for any other purpose.

§ 94.45-10 Auxiliary lines.

(a) One auxiliary line must be carried for each impulse-projected rocket type line-throwing appliance required or allowed by this subpart that is fabricated of—

(1) Manila and is at least 450m (1,500 ft.) long and 7.5cm (3 in.) or more in circumference; or

(2) A synthetic material and is at least 450m (1,500 ft.) long and is certified by the manufacturer to have a breaking strength of at least 40KN (9,000 lb.) and inhibited to resist the effects of ultraviolet light.

(b) One auxiliary line must be carried for each shoulder gun type line-throwing appliance allowed by this subchapter that is fabricated of—

(1) Manila and is at least 150m (500 ft.) and 7.5cm (3 in.) or more in circumference; or

(2) A synthetic material and is at least 150m (500 ft.) and is certified by the manufacturer to have a minimum breaking strength of at least 40 KN (9,000 lb.) and inhibited to resist the effects of ultraviolet light.

§ 94.45-15 Service.

Service use of rockets shall be limited to a period of 4 years from date of manufacture and replacement of outdated items shall be made at the first port of arrival in the United States where such rockets are available, and in all cases within 12 months after the date of expiration.

Note.—In firing the line-throwing appliance, the operating instructions and safety precautions furnished by the manufacturer should be followed.

PART 97—OPERATIONS

§ 97.15-25 [Amended]

5. By amending § 97.15–25 by deleting subparagraph (a)(3).

PART 108—DESIGN AND EQUIPMENT

6. By revising § 108.517 to read as follows:

§ 108.517 Line-throwing appliances.

(a) Each unit on an international voyage shall carry an impulse-projected rocket type line-throwing appliance that is approved under Subpart 160.040, and auxiliary equipment which is listed in § 160.040–4.

(b) Each unit on other than an international voyage may carry:

(1) A shoulder gun which is approved under Subpart 160.031 and auxiliary equipment which is listed in § 160.031–4; or

(2) An impulse-projected rocket appliance which is approved under Subpart 160.040, and auxiliary equipment which is listed in § 160.040–4.

(c) *Auxiliary Lines.* (1) One auxiliary line must be carried for each impulse-projected rocket type line-throwing appliance required or allowed by this subpart that is fabricated of—

(i) Manila and is at least 450m (1,500 ft.) long and 7.5cm (3 in.) or more in circumstance; or

(ii) A synthetic material and is at least 450m (1,500 ft.) long and is certified by the manufacturer to have a breaking strength of at least 40KN (9,000 lb.) and inhibited to resist the effects of ultraviolet light.

(2) One auxiliary line must be carried for each shoulder gun type line-throwing appliance allowed by this subchapter that is fabricated of—

(i) Manila and is at least 150m (500 ft.) and 7.5cm (3 in.) or more in circumference; or

(ii) A synthetic material and is at least 150m (500 ft.) and is certified by the manufacturer to have a minimum breaking strength of at least 40KN (9,000 lb.) and inhibited to resist the effects of ultraviolet light.

(d) *Service.* Service use of rockets shall be limited to a period of 4 years from date of manufacture and replacement of outdated items shall be made at the first port of arrival in the United States where such rockets are available, and in all cases within 12 months after the date of expiration.

Note.—In firing the line-throwing appliance, the operating instructions and safety precautions furnished by the manufacturer should be followed.

PART 160—LIFESAVING EQUIPMENT

§ 160.031-4 [Amended]

7. By deleting and reserving paragraph § 160.031–4(c).

PART 167—PUBLIC NAUTICAL SCHOOL SHIPS

8. By revising § 167.35–85 to read as follows:

§ 167.35-85 Line-throwing appliances.

(a) *Mandatory.* All nautical school ships on an international voyage shall carry an impulse projected rocket type line-throwing appliance that is approved under Subpart 160.040, and the auxiliary equipment listed in § 160.040–4.

(b) *Optional.* All nautical school ships of 150 gross tons or over, on other than an international voyage may carry:

(1) A shoulder gun which is approved under Subpart 160.031 and auxiliary equipment which is listed in § 160.031–4; or

(2) An impulse-projected rocket appliance which is approved under Subpart 160.040, and auxiliary equipment which is listed in § 160.040–4.

(c) *Accessibility.* The line-throwing appliance and its auxiliary equipment shall be readily accessible for use. No part of this equipment shall be used for any other purpose.

(d) *Auxiliary Lines.* (1) One auxiliary line must be carried for each impulse-projected rocket type line-throwing appliance required or allowed by this subpart that is fabricated of

(i) Manila and is at least 450m (1,500 ft.) long and 7.5cm (3 in.) or more in circumference; or

(ii) A synthetic material and is at least 450m (1,500 ft.) long and is certified by the manufacturer to have a breaking strength of at least 40KN (9,000 lb.) and inhabited to resist the effects of ultraviolet light.

(2) One auxiliary line must be carried for each shoulder gun type line-throwing appliance allowed by this subchapter that is fabricated of—

(i) Manila and is at least 150m (500 ft.) and 7.5cm (3 in.) or more in circumference; or

(ii) A synthetic material and is at least 150m (500 ft.) and is certified by the manufacturer to have a minimum breaking strength of at least 40KN (9,000 lb.) and inhibited to resist the effects of ultraviolet light.

(e) *Service.* Service use of rockets shall be limited to a period of 4 years from date of manufacture, and replacement of outdated items shall be made at the first port of arrival in the United States where such rockets are available, and in all cases within 12 months after the date of expiration.

Note.—In firing the line-throwing appliance, the operating instructions and safety precautions furnished by the manufacturer should be followed.

(f) *Drills.* The master of a nautical school ship equipped with a line-throwing appliance shall drill his crew in its use and require it to be fired at least once every 3 months. Each drill shall be recorded in the nautical school

ship's log book. The service line shall not be used for drill purposes. The drills shall be conducted as follows:

(1) For impulse-projected rocket type, by actually firing the rocket with any ordinary line of proper length attached; or

(2) For shoulder gun type, by actual firing, using the regular cartridge and projectile with any ordinary line of proper length.

PART 192—LIFESAVING EQUIPMENT

9. By revising Subpart 192.45 to read as follows:

Subpart 192.45—Line-Throwing Appliances

Sec.
192.45-1 Line-throwing appliances.
192.45-5 Accessibility.
192.45-10 Auxiliary lines.
192.45-15 Service.

Subpart 192.45—Line-Throwing Appliances

§ 192.45-1 Line-throwing appliances.

(a) *Mandatory.* All mechanically propelled vessels of 500 gross tons or over, on an international voyage, shall carry an impulse-projected rocket type line-throwing appliance that is approved under Subpart 160.040, and auxiliary equipment listed in § 161.040-4.

(b) *Optional.* All mechanically propelled vessels of 500 gross tons or over, on other than an international voyage, certificated for ocean or coastwise service, and all mechanically propelled vessels of 150 gross tons or over and less than 500 gross tons, certificated for ocean and coastwise service, may carry:

(1) A shoulder gun which is approved under Subpart 160.031 and auxiliary equipment which is listed in § 160.031-4; or

(2) An impulse-projected rocket appliance which is approved under Subpart 160.040, and auxiliary equipment which is listed in § 160.040-4.

§ 192.45-5 Accessibility.

The line-throwing appliance and its auxiliary equipment shall be readily accessible for use. No part of this equipment shall be used for any other purpose.

§ 192.45-10 Auxiliary lines.

(a) One auxiliary line must be carried for each impulse-projected rocket type line-throwing appliance required or allowed by this subpart that is fabricated of—

(1) Manila and is at least 450m (1,500 ft.) long and 7.5cm (3 in.) or more in circumference; or

(2) A synthetic material and is at least 450m (1,500 ft.) long and is certified by the manufacturer to have a breaking strength of at least 40KN (9,000 lb.) and inhibited to resist the effects of ultraviolet light.

(b) One auxiliary line must be carried for each shoulder gun type line-throwing appliance allowed by this subchapter that is fabricated of—

(1) Manila and is at least 150m (500 ft.) and 7.5cm (3 in.) or more in circumference; or

(2) A synthetic material and is at least 150m (500 ft.) and is certified by the manufacturer to have a minimum breaking strength of at least 40KN (9,000 lb.) and inhibited to resist the effects of ultraviolet light.

§ 192.45-15 Service.

Service use of rockets shall be limited to a period of 4 years from date of manufacture and replacement of outdated items shall be made at the first port of arrival in the United States where such rockets are available, and in all cases within 12 months after the date of expiration.

Note.—In firing the line-throwing appliance, the operating instructions and safety precautions furnished by the manufacturer should be followed.

PART 196—OPERATIONS

§ 196.15-25 [Amended]

10. By amending § 196.15-25 by deleting paragraph (a)(3).

(46 U.S.C. 481 (as amended); 49 CFR 1.46(n)(4))

Clyde T. Lusk, Jr.,

Captain, U.S. Coast Guard, Acting Chief, Office of Merchant Marine Safety.

[FR Doc. 80-39435 Filed 12-10-80; 8:45 am]
BILLING CODE 4910-14-M

FEDERAL COMMUNICATIONS COMMISSION

47 CFR Ch. I

[CC Docket No. 79-184; FCC 80-653]

Inquiry Into the Policies To Be Followed in the Authorization of Common Carrier Facilities To Meet North Atlantic Telecommunications Needs During the 1986-1995 Period

AGENCY: Federal Communications Commission.

ACTION: Proposed Rule

SUMMARY: The Commission is issuing for public comment a number of alternative, proposed facilities Construction and use plans for North Atlantic Communications submitted by the United States international service carriers and the Communications Satellite Corporation. The plans were submitted in response to the Commission's Inquiry into development of the policies it shall apply in acting upon requests for authorization to construct cable and satellite facilities for service in the North Atlantic region during the 1985-1995 period.

DATES: Comments on the carrier and Comsat plans and on the FCC staff analysis should be filed by December 8, 1980, and reply comments by December 22, 1980.

ADDRESSES: Comments and replies should be submitted to: The Secretary Federal Communications Commission, 1919 M Street NW., Washington, D.C. 20554

FOR FURTHER INFORMATION CONTACT: J. Michael Cummins, Bob Gosse International Facilities Planning Division, Common Carrier Bureau, Federal Communications Commission, Washington, D.C. 20554 (202) 632-4047

SUPPLEMENTARY INFORMATION:

FCC Begins Rulemaking on Policies To Be Followed for Authorizing North Atlantic Communications Facilities For 1985-1995

[CC Docket No. 79-184]

The Commission has begun a rulemaking setting forth for comment on a range of alternative plans for construction and use of cable and satellite facilities to meet demands for common carrier services for the North Atlantic Region during the 1985-1995 period.

Detailed descriptions of the plans on which the Commission is seeking comment are included in Attachment A to this release.

(The North Atlantic Region refers primarily to the routes between the United States and the 26 countries in the European Conference of Postal and Telecommunication Administrations [CEPT], but also includes Canada and all countries served by the North Atlantic cables.)

On July 20, 1979, the FCC instituted an inquiry to begin the processes for developing the United States policies for the 1985-1995 North Atlantic communications facilities. On March 5, 1980, it adopted a second inquiry notice asking the United States international service carriers (USISC) and the Communications Satellite Corporation (Comsat) to provide detailed planning information to aid the FCC in developing the appropriate facilities policy and to submit for Commission review proposed facilities construction and use plans. (The USISC include the American Telephone and Telegraph Co., ITT World Communications Inc., FTC

Communications, Inc., RCA Global Communications, Inc., TRT Telecommunications Corp. and Western Union International, Inc.)

The facilities options used in the alternative facilities plans proposed for the 1985–1995 time period range from zero to three additional submarine cables to be used in combination with high-capacity INTELSAT VI and VII series satellites. The cable options include two state-of-the-art analog cables and a new high-capacity digital fiber-optic cable with branching capability (i.e., multiple landing points for a single cable). All of the proposed plans include only one satellite option for the INTELSAT VI series—the high capacity (40,500 voice-grade circuits) B–7 design. The proposed cable options range all the way from a three cable plan—an analog cable to be introduced in 1986 followed by a fiber-optic cable in 1990 and another fiber-optic cable in 1994—to no new cables at all during the planning period.

The FCC staff developed an additional plan primarily to provide a benchmark for plan comparison purposes and also to evaluate a smaller capacity satellite option (the L–1) for the INTELSAT VI series.

The estimated cost to the U.S. carriers of the various plans range from $396.7 million for the alternative developed by the FCC staff to $442.8 million for the preferred plan of the USISC.

It said the staff benchmark plan was constructed to show the minimum facilities required to meet forecast traffic demand over the 1985–1995 planning period. There are a number of deficienceis in the carrier submissions, ranging from incomplete information to inconsistencies in the assumptions underlying or the data supporting the alternative plans.

Demand flexibility analysis, the FCC said, indicated that even with the use of the lower capacity L–1 design INTELSAT VI satellites circuit demand projected by the carriers' updated forecast could be accommodated even if a fiber-optic cable were delayed until the beginning of 1991, and use of the larger B–7 INTELSAT VI satellites would permit the forecast demand to be accommodated even if the fiber-optic cable were delayed beyond 1991. Its analysis led it to conclude tentatively that there is no discernible need for the introduction of an additional analog cable prior to the availability of a fiber-optic digital cable.

It also appears that an analog cable is unnecessary as a contingency against delay in the introduction of the INTELSAT VI satellites, the FCC said. Comsat's projections of the maximum capacity of the INTELSAT V satellites indicates that those satellites and existing North Atlantic cables could meet the forecast traffic demand through 1986, and possibly until the end of 1987.

Therefore, the FCC said a delay in the introduction of the INTELSAT VI satellites for two or more years, and a delay of three or more years in the introduction of a fiber optic cable could be tolerated from the standpoint of meeting total traffic demand without the construction of an additional analog cable. This margin of safety, the FCC said, combined with the nearly $200 million total capital cost of an analog design cable and its significantly higher per-circuit cost, strongly suggest that construction of such a facility cannot be justified. Consequently, the FCC tentatively concluded that those plans proposing construction on an additional analog cable could be excluded from consideration in this rulemaking.

If the plans containing an analog cable and the plan containing no new cables are excluded, the FCC said the remaining plans constitute a modified range that is bounded on the low-capacity end by the FCC staff plan (the lower capacity L–1 satellite and a single fiber-optic cable in 1991) and on the high-capacity end by the USISC preferred plan (Plan 1—the higher capacity B–7 satellite and two fiber-optic cables in 1988 and 1992, respectively).

The Commission said that comparison of the proposed plans with respect to service quality considerations led to the general conclusion that there is little difference between them. It said all of them rely substantially on redundant or backup capacity in the form of an in-orbit spare satellite to provide adequate restoration of service.

While it was proposing to concentrate its efforts in the initial stage of this rulemaking to the near term facilities decision, the FCC said it did not follow that it or the parties should limit consideration only to the early years of the planning period. Decisions concerning the capacity and timing of facilities implemented in the early portion of the planning period can have an effect on the decisions to be made on facilities required in the latter part of the period.

The Commission said it was delegating authority to its staff to convene public meetings of the parties to facilitate the generation and early exchange of basic planning information. It said the staff already has requested that the latest updated traffic forecast be provided no later than November 14.

Comments are due by December 8, replies by December 22.

Action by the Commission November 6, 1980, by Notice of Proposed Rulemaking (FCC 80–653). Commissioners Ferris (Chairman), Lee, Quello, Washburn, Fogarty, Brown and Jones.

For additional information contact Bob Gosse (202) 632–4047.

Note.—This document is a sammation of the Commission's action on this docket. Copies of the document in its entirety may be obtained from the Public Information Office, Rm. 202, 1919 M St. NW., Washington, D.C. 20554.

Federal Communications Commission.

William J. Tricarico,

Secretary.

Appendix A—Alternative Plans on Which the FCCIs Seeking Comments

USISC Plan 1 (Two Optical-Fiber Cable Plan)

This plan is based on the updated USISC (AT&T plus IRC) 1980 traffic forecast and includes a detailed circuit distribution. It calls for introduction of an SL (optical-fiber) digital cable with a capacity of 12,000 basic voice-grade circuits (36,000 effective circuits with TASI) in 1988 and another 12,000 circuit SL cable in 1992; a specified level of use of TASI–E (a circuit-multiplication technique) on telephone circuits in existing analog cables and TASI–D on those in the new SL digital cables. It assumes use of the B–7 (40,500 voice grade circuits) design for the INTELSAT VI series of satellites which will be introducad in the Atlantic Ocean Region in 1986 (Primary Path Satellite and in-orbit spare), 1988 (Major Path–1 satellite) and 1989 (Major Path-2 satellite). The plan assumes an INTELSAT VII series with twice the capacity of the B–7 INTELSAT VI to be introduced in 1993 (Primary Path and in-orbit spare) and 1995 (Major Path–1). Telephone circuits are distributed among facilities on the basis of balaned loading.

USISC Plan 5 (One Optical-Fiber Cable Plan)

This is a summary plan without a detailed circuit distribution and is based on the USISC forecast set forth at a 1979 meeting of the North Atlantic Consultative Working Group (NACWG). It calls for introduction of an SL (optical-fiber) digital cable in 1988. It assumes use of TASI–E on telephone circuits in existing analog cables and TASI–D on those in the SL cable. It assumes the same satellite configuration used in USISC (and Comsat) Plan 1—the B–7 (40,500 circuit) INTELSAT VI introduced in 1986, 1988 and 1989, and INTELSAT VII satellites (with twice the capacity of

the B-7 design) introduced in 1993 and 1995.

USISC Plan 6 (One Optical-Fiber Cable Plan)

This also is a summary plan without a detailed circuit distribution and is based on the USISC 1979 Montreal forecast. The plan calls for introduction of an SL digital cable of 12,000 circuits in 1990. It assumes use of TASI-E on telephone circuits in existing analog cables and TASI-D on those in the new digital cable. The plan assumes the same satellite configuration proposed in USISC (and Comsat) Plan 1.

COMSAT Plan 1 (One Optical-Fiber Cable Plan)

This plan is similar to USISC Plan 5 but has a detailed circuit distribution for AT&T based on the updated (1980) USISC traffic forecast and for the IRCs based on the 1979 Montreal forecast. The plan calls for introduction of an SL digital cable of 12,000 circuits in 1988; assumes use of TASI-E on telephone circuits in existing analog cables and TASI-D on those in the digital cable. It assumes the same satellite configuration used in USISC Plan 1. Telephone circuits are distributed among facilities on the basis of balanced loading.

COMSAT Plan 2 (One Optical-Fiber Cable Plan)

This plan calls for introduction of an SL (12,000 circuit) cable in 1989. Otherwise it calls for the same facilities as the USISC Plan 1 and Comsat Plan 1.

COMSAT Plan 3 (One Optical Fiber Cable Plan)

This plan is similar to USISC Plan 6. The plan calls for introduction of an SL (12,000 circuit) cable in 1990. Otherwise it calls for the same facilities as the USISC Plan 1 and Comsat Plan 1.

FCC Staff Plan (One Optical-Fiber Cable, Small Satellite Plan)

This plan contains a detailed circuit distribution for both AT&T and the IRCs that is based on the updated (1980) USISC forecast. It calls for introduction of an SL (optical-fiber) digital cable of 12,000 circuits in 1991; assumes use of TASI-E on telephone circuits in the existing analog cables and TASI-D on those in the new digital cable. The FCC staff plan alone assumes use of the smaller L-1 (rather than B-7) design for the INTELSAT VI series of satellites. (The L-1 has 85 percent of the capacity of the B-7 or approximately 34,000 voice-grade circuits). The plan assumes the same schedule of introducing the INTELSAT VI series in the Atlantic Ocean Region—1986 (Primary Path satellite and in-orbit spare), 1988 (Major Path-1 satellite), and 1989 (Major Path-2 Satellite). It assumes use of an INTELSAT VII satellite (with twice the capacity of the L-1 design) to be introduced in 1983 (Primary Path satellite and in-orbit spare) and 1995 (Major Path-1). Telephone circuits are distributed among facilities on the basis of balanced loading to the extent that that is consistent with maximum facilities use.

[FR Doc. 80-38411 Filed 12-10-80; 8:45 am]
BILLING CODE 6712-01-M

DEPARTMENT OF TRANSPORTATION

Federal Highway Administration

49 CFR Part 392

[BMCS Docket No. 97; Notice No. 80-13]

Four-Way Flashers on Slow-Moving Vehicles

AGENCY: Federal Highway Administration (FHWA), DOT.

ACTION: Notice of proposed rulemaking.

SUMMARY: This notice solicits comments and information on the FHWA's intent to amend the Federal Motor Carrier Safety Regulations (FMCSR) concerning the use of four-way (hazard warning) flashers. The FHWA is considering amending the FMCSR so that drivers of slow-moving motor vehicles will not be prohibited from activating four-way flashers which flash simultaneously to warn drivers of other vehicles of the presence of a traffic hazard, and reduce the chance of a rear end accident.

DATE: Comments must be received on or before March 11, 1981.

ADDRESS: All comments should refer to the docket number and notice number that appear at the top of this document and must be submitted (preferably in triplicate) to Room 3402, Bureau of Motor Carrier Safety, 400 Seventh Street SW., Washington, D.C. 20590.

FOR FURTHER INFORMATION CONTACT: Mr. Gerald J. Davis, Bureau of Motor Carrier Safety, (202) 426-9767; or Mr. Gerald M. Tierney, Office of the Chief Counsel, (202) 426-0346, Federal Highway Administration, Department of Transportation, 400 Seventh Street, SW., Washington, D.C. 20590. Office hours are from 7:45 a.m. to 4:15 p.m. ET, Monday through Friday.

SUPPLEMENTARY INFORMATION: The Bureau of Motor Carrier Safety (BMCS) has received a petition proposing that the FMCSR be amended to permit the use of four-way flashers on slow-moving vehicles to warn operators of other vehicles of potential hazards. Four-way flashers are simultaneously flashing front and rear electric turn signals.

The FMCSR specifically provides that four-way flashers shall be utilized simultaneously on a motor vehicle that is stopped on the traveled portion of the highway or on the shoulder of the highway for any cause other than necessary traffic stops. Four-way flashers are also required to be used when warning devices are being placed and picked up for storage before movement of a vehicle. Four-way flashers shall be used in addition to, but not in lieu of, specified warning devices at other times while a vehicle is stopped. The FMCSR state that turn signals can only be activated on a moving vehicle when the driver is signaling for a turn or lane change.

A second petition was also received proposing not only the use of four-way flashers on slow-moving vehicles to warn of potential hazards, but also proposing that the FMCSR be amended to require the automatic activation of four-way flashers through the retarder system on those commercial vehicles having such systems.

The following discussion regarding the subject of the first petition (permitting the use of four-way flashers on slow-moving vehicles to warn of potential hazards) is divided into seven different subject sections. The subject of the automatic activation of four-way flashers through a retarder system, recommended in the second petition, is discussed in the eighth section, FMCSR Proposed Revision.

1. FHWA Studies

Two studies, funded by the FHWA, indicate that standard four-way flashers activated on a slow-moving vehicle is effective in warning motorists of the presence of potential hazards. The first study "Evaluation of Techniques for Warning of Slow-Moving Vehicles Ahead" [1] was jointly conducted by the FHWA's Office of Research, Maine Department of Transportation, and the University of Maine at Orono. This study examined the effectiveness of road signs and vehicle markings on rural two-lane roads for warning motorists of a slow-moving vehicle ahead. The study indicated: (1) activation of four-way flashers on slow-moving trucks is an effective means for reducing the accident potential when such vehicles

[1] Evaluation of Techniques for Warning of Slow-Moving Vehicles Ahead, FHWA-RD-79-79. Available from the National Technical Information Service, Department of Commerce, 5285 Port Royal Road, Springfield, Virginia 22161, Accession No. PB 80114582. Paper copy price $7.00. Executive Summary is also available. Accession No. PB 80141849, paper copy price $5.00.

are overtaken by faster moving vehicles; (2) four-way flashers on trucks are as effective during the day as they are at night; and (3) roadside signs are relatively ineffective as warning devices in a hazardous overtaking situation. Although there was a measurable positive effect in the vicinity of the signs tested, the effect was not lasting. Motorists who saw the signs that caused the immediate reaction generally did not exhibit any different behavior at the point of overtaking than did those who saw no sign.

The second study "Safety Aspects of Using Vehicle Hazard Warning Lights" [2] examined disabled vehicles and slow-moving vehicles at two-lane and four-lane locations under both day and night conditions. The slow-moving vehicle tests involved introducing a slow-moving vehicle (either a car or a tractor-trailer) into the traffic stream and observing the overtaking vehicles. For these tests, the effects of red and amber flashers, as well as the effect of vehicles traveling at 30 and 40 miles per hour (m.p.h.) (48.3 and 64.4 kilometers per hour) were examined. The study found that four-way flashers increase the awareness of the drivers of overtaking vehicles, and that drivers of overtaking vehicles approach more cautiously and pass more carefully when four-way flashers are activated.

This study also showed that for vehicles with activated four-way flashers: (1) overtaking vehicle drivers responded at a greater distance than they did to a slow-moving vehicle without flashers; (2) approaching vehicle drivers were aware of the speed differential sooner and slowed down farther from the slow-moving vehicle reducing the likelihood of a rear end collision; and (3) passing vehicle drivers changed lanes farther from the slow-moving vehicle.

Both FHWA studies included test situations where lead vehicles had to immediately reduce their speed considerably.

2. Uniform Vehicle Code

According to the Uniform Vehicle Code (UVC), a comprehensive guide for State motor vehicle and traffic laws, the purpose of four-way flashers is to warn the operators of other vehicles of a vehicular traffic hazard requiring extreme care in approaching, overtaking, or passing. the UVC does not require that a vehicle using four-way flashers be stopped or disabled. The Code considers that the driver of a slow-moving vehicle (regardless of speed) may find it desirable to warn the drivers of other vehicles approaching from the front or rear that the slow-moving vehicle or a traffic hazard located in proximity to the slow-moving vehicle, constitutes a traffic hazard. The Code does not restrict the use of four-way flashers to stopped or disabled vehicles. It proceeds on the assumption that under certain circumstances a slower moving vehicle may be as much a hazard as a stopped vehicle.

3. State Regulations and Laws

States have recognized the need for standard four-way flashers being using as a warning system on slow-moving vehicles.

Turnpike authorities in a few States, such as New York, have special rules for the operation of vehicles on their toll facilities. The turnpike regulations are in addition to the State's statutory rules of the road. Slow-moving vehicles on these turnpikes have been observed using their four-way flashers on long grades and elsewhere when their speeds dropped below 40 m.p.h. due to weather, grade, traffic, or other factors.

A Connecticut law authorizes use of four-way flashers on a moving vehicle on a grade when drivers are unable to maintain the minimum speed of 40 m.p.h. on a limited access divided highway, or the vehicle is traveling at such a slow speed as to obstruct or endanger following traffic. Pennsylvania has a similar law.

4. University of Michigan Study

A study, "Studies of Automobile and Truck Rear Lighting and Signaling Systems," G23 conducted by the Highway Safety Research Institute of the University of Michigan, indicated that many drivers are a poor judge of relative speed and that relative speed between vehicles moving in the same direction is positively related to the probability of a rear end crash. On grades, rear end collisions increase compared to other two-vehicle collisions, showing the effect of variability of traffic speed. The study determined that drivers' perception of relative speed was so poor that the drivers do little more than identify whether the gap between their vehicle and a lead vehicle was opening or closing.

The study also indicates that inadequacies and malfunctions of rear lighting systems, which are defects most often reported in connection with accidents involving trucks, contribute to rear end collisions. The study indicates that the difference in speed between vehicles in the same lane is often the cause of rear end collisions involving trucks and suggests that a means for drivers to determine the speeds of vehicles could be an accident deterrent.

The University of Michigan study referenced a 1967 data analysis [4] by Robert L. Vecellio which showed that special circumstances tend to be associated with rear end collisions involving trucks. According to the analysis, rear end collisions are more likely to occur on an upgrade than on a corresponding downgrade. The study involved 1,284 rear end collisions occurring on the Ohio Turnpike. Of these, 28 percent were on upgrades and only 5 percent on downgrades. It is interesting to note that the obvious upgrade hazard implied in this data was observed despite the fact that the maximum upgrade on the Ohio Turnpike is 2 percent. In 53 percent of all upgrade rear end collisions, the striking vehicle was a truck, and in 88 percent of these accidents involving trucks the vehicle struck was also a truck.

5. Lights May Be Deceptive

A BMCS review of 701 rear end underride accidents in 1978 [5] of stopped or parked commercial motor vehicles shows that four-way flashers on commercial motor vehicles were activated in 8.9 percent of the accidents. These accidents involved passenger cars on pickup trucks running into and under the rear of the commercial trucks. Fifty-seven percent of these accidents involved commercial trucks parked on the shoulder of the roadway. The BMCS concern is the possibility of activated four-way flashers contributing to the cause of accidents. Drivers of vehicles traveling in the same direction as parked vehicles displaying four-way flashers could mistake the parked vehicle for a moving vehicle on a roadway and collide into the rear of the vehicle. If there is such a problem, a similar problem might exist regarding slow-moving vehicles displaying four-way flashers, particularly on steep uphill grades.

[2] Safety Aspects of Using Vehicle Hazard Warning Lights, available at the Bureau of Motor Carrier Safety, 400 Seventh Street, SW., Washington, D.C. 20590.

[3] Studies of Automobile and Truck Rear Lights and Signaling Systems, UM-7101-C128. Available from the National Technical Information Service, Department of Commerce, 5285 Port Royal Road, Springfield, Virginia 22161, Accession No. PB 250 485, paper copy price $13.00.

[4] Ohio Turnpike Accident Analysis, 1960-1965. Available from the Highway Safety Research Institute Library, University of Michigan, Ann Arbor, Michigan 48109. Reference No. 10110, cost $10.80.

[5] Available at the Bureau of Motor Carrier Safety for inspection, 400 Seventh Street, SW., Washington, D.C. 20590.

A study [6] by Merrill J. Allen, O.D., Ph. D, Professor of Optometry at the University of Indiana, concluded that even though a set of lights are flashing, they may not be bright enough or they may be deceptive of location, and usually appear further away. The study shows that two out of three people perceive red taillights to be farther away than they actually are which could contribute to rear end collisions. Professor Allen points out, however, that four-way flashers using standard candlepower are five to eight times more intense than standard taillights and thus are more detectable.

Also, there is the possibility that activated four-way flashers might have a "highway hypnosis" effect on some drivers. (Highway hypnosis [7] as a real phenomenon has not been proven, but evidence shows that long periods of driving on monotonous stretches of road can lead to inattentive driving.)

6. State of California Observations

According to an analysis of 1978 fatal accidents on California freeways by the Office of Traffic Engineering of the California Department of Transportation (CDOT),[8] "There are a substantial number of fatal accidents each year involving vehicles legally parked or stopped on shoulders. Oftentimes, the parked vehicles have their taillights or even emergency flashers on. There were 68 such fatal accidents in 1978. The majority, 43, were coded as rear end, but 22 were coded as pedestrian since dismounted motorists were killed, and 3 were coded as other accident types. It is not known if these accidents are caused by sleepy, drunk, or inattentive drivers who randomly run off the road, or whether some drivers subconsciously believe they are following a moving vehicle."

In the 1960's, the California Highway Patrol (CHP) took action regarding the large number of nighttime rear end collisions of vehicles with patrol cars parked on the shoulder with their yellow rear warning lamps flashing. A number of ideas for reducing this problem were discussed but the only one that proved effective was to turn off the flashing warning lamp and leave on the tail lamps. This procedure worked so well in one of the CHP divisions that it was made a statewide policy in 1968.

Data [9] for 1967–68 showed that the number of rear end collisions with parked patrol vehicles dropped from 113 in 1967 to 62 in 1968. About that time, the CHP lost a legal suit brought by a person involving a rear end collision with a parked patrol car that had lighted tail lamps but no flashing warning lamp. To avoid similar future legal liability, the CHP required that either the warning lamps or the four-way flashers be activated. The following year, these types of rear end collisions almost doubled, approaching the 1967 level (a small part of which may have been due to an increase in the strength of the CHP during that time). Approximately two-thirds of these collisions involved parked vehicles utilizing four-way flashers.

However, additional data regarding a survey of rear end collisions from 1969 through 1978 lists the rear lighting equipment that was in use at the time of collisions. The survey shows a gradual decrease in collisions, even with the use of yellow warning lamps or four-way flashers, until 1978. Although the cause of the 1978 increase has not been analyzed, the CHP feels it may be due to other factors (increased vehicle miles, shift of enforcement activities, etc.) then lighting.

These observations are not meant to imply that the CDOT or CHP believe that drivers react to activated four-way flashers on vehicles parked off the roadway in the same manner they react to activated four-way flashers on vehicles traveling on the roadway.

7. Consideration of All Aspects

The foregoing suggests there may be some merit in amending the FMCSR to allow the use of four-way flashers on slow-moving vehicles to warn of potential hazards. However, of concern to the BMCS in proposing such an amendment is that additional highway safety related problems are not created, examples of such which were discussed in the foregoing. Driver familiarity regarding the use of four-way flashers is also a concern of the BMCS. In most parts of the country, activated four-way flashers signify a stalled or parked vehicle on the roadway or on the shoulder of the roadway. Amending the FMCSR to allow drivers of slow-moving vehicles to activate four-way flashers would establish a dual role which may confuse many drivers.

The BMCS has considered all aspects discussed in the foregoing. Though the concern exists regarding the possible negative aspects of using four-way flashers on slow-moving vehicles, information available to the BMCS has not shown any conclusive evidence that a safety problem would be created by allowing drivers of slow-moving vehicles to activate four-way flashers to warn of the presence of a traffic hazard. The BMCS welcomes any comments to the contrary and will consider all comments before making a final determination.

8. FMCSR Proposed Revision

This proposed FMCSR revision allows drivers to activate four-way flashers on slow-moving vehicles as a warning of potential hazards. However, the proposal does not mandate the use of four-way flashers. Consideration was given to proposing certain speed conditions. Without speed conditions, the use of four-way flashers is left to the discretion of the driver, unless speed conditions are mandated by State law or regulation. For example, some drivers traveling at 40 m.p.h. might activate their flashers while others traveling at the same speed would not do so. The BMCS believes that it is inappropriate to approve, restrict or prohibit conditions under which four-way flashers are activated as conditions differ from State to State. The BMCS believes that, to the greatest extent feasible, the States should regulate local highway safety matters.

After careful consideration, the BMCS proposes to amend the FMCSR to allow the activation of four-way flashers on slow-moving vehicles to warn of potential hazards.

The BMCS does not find merit with amending the FMCSR to require activation of four-way flashers through an engine retarder system, believing that the means of activating four-way flashers should be left to the discretion of the motor carrier or the driver.

In consideration of the foregoing, it is hereby proposed to amend Title 49, Code of Federal Regulations, Chapter III, Part 392, as follows:

1. Section 392.15 is amended by adding a new paragraph (f) to read as follows:

§ 392.15 Required and prohibited use of turn signals.

* * * * *

(f) *Warning for slow-moving motor vehicles.* This section shall not be construed to prohibit a driver from activating the hazard warning (four-way) flashers on a slow-moving motor vehicle to warn operations of other vehicles of the presence of a traffic hazard.

2. Section 392.22 is amended by adding a new paragraph (c) to read as follows:

§ 392.22 Emergency signals: Stopped vehicles.

* * * * *

(c) *Warning for slow-moving vehicles.* A driver of a slow-moving motor vehicle

[6] Ibid.
[7] Ibid.
[8] Ibid.
[9] Ibid.

may activate the vehicle's hazard warning (four-way) flashers to warn operators of other vehicles of the presence of a traffic hazard.

Note.—The FHWA has determined that this document does not contain a significant proposal according to the criteria established by the Department of Transportation pursuant to Executive Order 12044. The anticipated impact of this proposal is so minimal that it does not warrant the preparation of a full regulatory evaluation. This proposal would not impose any additional requirements or costs on any element of the public or private sectors.

(49 U.S.C. 304; 49 CFR 1.48(b) and 301.60)

(Catalog of Federal Domestic Assistance Program Number 20.217, Motor Carrier Safety)

Issued on: December 1, 1980.

Kenneth L. Pierson,

Director, Bureau of Motor Carrier Safety.

[FR Doc. 80-38331 Filed 12-10-80; 8:45 am]

BILLING CODE 4910-22-M

National Highway Traffic Safety Administration

49 CFR Part 571

[Docket No. 80-19; Notice 1]

Federal Motor Vehicle Safety Standards; New Pneumatic Tires for Passenger Cars

AGENCY: National Highway Traffic Safety Administration (NHTSA). DOT.

ACTION: Notice of proposed rulemaking.

SUMMARY: This notice proposes to amend the tire tables in Appendix A of Safety Standard No. 109. *New Pneumatic Tires—Passenger Cars,* by adding three new tire sizes. These sizes were originally proposed to be included in the tire table as part of a routine amendment. However, an objection was filed to the inclusion of these tires, because of a potential intermix problem. Data subsequently furnished show that such an intermix cannot occur. Hence, there appears to be no reason for not including these tire sizes in Appendix A, thereby permitting the introduction of these tire sizes into interstate commerce.

DATE: Comments on this notice must be received not later than January 12, 1981.

ADDRESS: Comments should refer to the docket number and be submittted to: Docket Section, National Highway Traffic Safety Administration, Room 5108, 400 Seventh Street, S.W., Washington, D.C. 20590. The Docket Section is open to the public from 8:00 a.m. to 4:00 p.m. Monday through Friday.

FOR FURTHER INFORMATION CONTACT: John Diehl, Office of Automotive Ratings, National Highway Traffic Safety Administration, 400 Seventh Street, S.W., Washington, D.C. 20590 (202-426-0852).

SUPPLEMENTARY INFORMATION: According to agency practice, NHTSA responds to petitions for adding new tire sizes to Appendix A of Standard No. 109 by quarterly issuing final rules under an abbreviated rulemaking procedure for expediting such routine amendments. Guidelines for this procedure, published at 33 FR 14964, October 5, 1968, and amended most recently at 39 FR 28980, August 13, 1974, provide that these final rules become effective 30 days after their date of publication if no comments objecting to them are received by NHTSA during this 30-day period. If objections are received, rulemaking procedures for proposing and issuing motor vehicle safety standards (49 CFR Part 553) are to be initiated.

Pursuant to a petition by the European Tyre and Rim Technical Organisation (ETRTO) on behalf of Dunlop Rubber Co., (Dunlop), a final rule amending Appendix A by adding three new metric tire size designations was published at 44 FR 27396, May 10, 1979, using abbreviated rulemaking procedure. An objection to this amendment was timely submitted by General Motors Corporation (GM). Accordingly, the amendment did not become effective.

The basis for GM's objection was that "intermix" problems could occur with these tires and rims. According to GM, the near identity of the nominal diameters of the proposed tire/rim combinations and of certain existing English unit tire/rim combinations would make it technically possible to mount and inflate an English unit tire on one of the proposed metric rims. Alternatively, it was alleged to be possible to mount the proposed metric tires on existing English unit rims. GM suggested that both possible intermixes could result in tire explosions and sudden deflations.

In response to these allegations, Dunlop has provided this agency with photographs and sample tires and rims to show that these tires and rims have incorporated a "blow-by" feature. "Blow-by" means that the tires have a small groove in the bead toe and the rims have a notch which fits into the groove. This blow-by feature makes it physically impossible to inflate these tires on rims other than those for which they were designed, and, conversely, makes it impossible to inflate tires without the blow-by feature on these rims. Based on this feature, NHTSA has tentatively concluded that no intermix would be possible with these tires and rims. Furthermore, the agency is not aware of any other safety problems which might arise from adding these tire sizes to the tire tables. Accordingly, the agency is proposing that these tire sizes be added to Appendix A of Standard No. 109.

In consideration of the foregoing, it is proposed that 49 CFR 571.109 be amended as follows:

§ 571.109 New pneumatic tires—passenger cars.

1. Figure 1 is amended by adding the following values:

Figure 1.—*Bead Unseating Fixture Dimensions in Inches*

Wheel size	Dimension A for tire with maximum inflation pressure— Other than 60 lb/in²	60 lb/in²
* * * * *		
320 mm	8.5	
345 mm	9.25	

Table I of Appendix A [Amended]

2. Table I of Appendix A is amended by adding the following sizes and corresponding values to Table I-OO, to read as set forth below:

Table I-OO.—*Tire Load Ratings, Test Rims, Minimum Size Factors, and Section Widths for "65 Series" Radial Ply Tires on DL Rims*

Tire size [1] designation	Maximum tire loads (pounds) at various cold inflation pressures (pounds per square inch)													Test rim width (millimeters)	Minimum size factor (millimeters)	Section width [2] (millimeters)
	16	18	20	22	24	26	28	30	32	34	36	38	40			
150/65R320	415	445	480	510	545	575	605	640	670	700	730	765	800	95	655	149
160/65R345	495	530	570	610	645	685	725	760	795	835	875	910	950	110	704	162
180/65R345	605	655	700	745	795	840	885	935	980	1,025	1,070	1,120	1,165	110	744	177

[1] The letter "H," "S," or "V" may be included in any specified tire size designation adjacent to the "R."

[2] Actual section width and overall width shall not exceed the specified width by more than 7 percent.

Interested persons are invited to submit comments on this proposal to the address for comments listed above. It is requested but not required that 10 copies be submitted. Those persons desiring to be notified upon receipt of their comments by the docket section should enclose a self-addressed, stamped postcard in the envelope with their comments. When the comments are received, the docket supervisor will return the postcard by mail.

All comments must be limited so as not to exceed 15 pages in length. Necessary attachments may be appended without regard to the 15-page limit. This limitation is intended to encourage commenters to detail their primary arguments in a concise fashion.

All comments received before the close of business on the comment closing date will be considered in formulating a final decision on this proposal. All such comments will be available for public inspection in the docket before, and after the comment closing date. To the extent possible, comments filed after the comment closing date will also be considered. Those which are too late to be considered in this final decision will be treated as suggestions for future rulemaking. The agency will continue to file relevant material in the docket as it becomes available after the comment closing date, and it is recommended that interested persons continue to examine the docket for new material.

If a commenter wishes to submit certain information under a claim of confidentiality, three copies of the complete submission, including the purportedly confidential information, should be submitted to the Chief Counsel, NHTSA, at the address given above, and seven copies from which the purportedly confidential information has been deleted should be submitted to the address for comments given above. Any claim of confidentiality must be supported by a statement demonstrating that the information falls within 5 U.S.C. 552(b)(4) and that disclosure of the information is likely to result in substantial competitive damage; specifying the period during which the information must be withheld to avoid that damage; and showing that earlier disclosure would result in that damage. In addition, the commenter, or, in the case of a corporation, a responsible corporate official authorized to speak for the corporation, must certify in writing that each item for which confidential treatment is requested is in fact confidential within the meaning of 5 U.S.C. 552(b)(4) and that a diligent search has been conducted by the commenter or its employees to ensure that none of the specified items has previously been released to the public.

NHTSA has considered the effects of this proposal and determined that permitting the introduction of these tire sizes will benefit those manufacturers desiring to produce these sizes, and will have no adverse effect on those manufacturers who do not. The public will be minimally affected by this proposal. Accordingly, NHTSA has determined that this proposal is not a significant regulation within the meaning of Executive Order 12221.

The program official and attorney principally responsible for the development of this proposal are John Diehl and Stephen Kratzke, respectively.

(Secs. 103, 119, 201, and 202, Pub. L. 89-563, 80 Stat. 718 (15 U.S.C. 1392, 1407, 1421, and 1422; delegations of authority at 49 CFR 1.50 and 49 CFR 501.8))

Issued on December 2, 1980.

Michael M. Finkelstein,

Associate Administrator for Rulemaking.

[FR Doc. 80-38210 Filed 12-10-80; 8:45 am]

BILLING CODE 4910-59-M

---

49 CFR Part 571

[Docket No. 80-18; Notice 1]

Federal Motor Vehicle Safety Standards; Seat Belt Assembly Anchorages; Anchorages for Child Restraint Systems

AGENCY: National Highway Traffic Safety Administration (NHTSA).

ACTION: Notice of proposed rulemaking.

SUMMARY: This notice proposes to amend Safety Standard No. 210, *Seat Belt Assembly Anchorages,* to require all vehicles with automatic restraint systems at the right front designated seating position to be equipped with anchorages for Type 1 lap belts at that position. It would also require all vehicles under 10,000 pounds GVWR to have anchorages or pre-drilled holes suitable for the installation of anchorages for tether straps on child restraint systems at all rearmost designated seating positions. The purpose of both of the proposed requirements is to ensure that child restraint systems can be easily and properly secured in vehicles. Some automatic belt designs currently include only a single, diagonal shoulder belt which cannot be used for securing child restraint systems. The proposed requirement for anchorages would enable parents to install lap belts if they wish to secure their child restraint in the front outboard seating position. A large majority of current child restraint systems include a tether strap to secure the top part of the child seat to the vehicle. The proposed requirement for pre-drilled holes will facilitate the use of these tether straps and thereby greatly increase the protection provided to children using that type of child restraint system. The notice also proposes location and strength requirements for lap belt and tether anchorages. Additionally, instructions for the vehicle's owner manual would be required to explain how tether anchorages and straps are to be installed and used and to explain how lap belts could be installed for use with child restraints.

DATES: Proposed effective date: September 1, 1981. Comment closing date: February 9, 1981.

ADDRESSES: Comments should refer to the docket number and notice number and be submitted to: Docket Section, Room 5108, Nassif building, 400 Seventh Street, SW., Washington, D.C. 20590. (Docket hours: 7:45 a.m. to 4:15 p.m.).

FOR FURTHER INFORMATION CONTACT: Mr. Vladislav Radovich, Office of Vehicle Safety Standards, National Highway Traffic Safety Administration, 400 Seventh Street, SW., Washington, D.C. 20590 (202-426-2264).

SUPPLEMENTARY INFORMATION: Safety Standard No. 213, *Child Restraint Systems* (49 CFR 571.213), specifies that each new child restraint must be designed to be secured to a vehicle by means of one of the vehicle's lap belts or by means of a lap belt plus one additional tether strap (a strap that is usually connected to the top of the child restraint and that should be anchored to the vehicle structure).

With the advent of the requirements in Safety Standard No. 208, *Occupant Crash Protection* (49 CFR 571.208), for automatic restraint protection in the front seats of cars, there has been concern that lap belts may not be available in front seating positions to

enable parents to secure child restraint systems. Although the rear seat is the safest place to install child restraint systems, parents wishing to have their young children more readily within sight and reach place these systems in the front seat. While lap belts will probably be installed in the vast majority of vehicles equipped with air bags, some automatic belt designs may not include lap belts and may not be suitable for securing child restraints. For example, the automatic belt design currently used on the Deluxe Volkswagen Rabbit consists of a single, diagonal belt (no lap belt is included) which cannot be used to secure a child restraint. Moreover, persons wishing to install lap belts in the front seating positions of these type vehicles may have difficulty doing so with the anchorages that are present. For this reason, the Physicians for Automotive Safety petitioned the agency to require lap belts in all vehicles equipped with automatic restraints.

Safety Standard No. 210, *Seat Belt Anchorages*, requires all passenger cars, lightweight trucks, and multipurpose passenger vehicles to be equipped with anchorages for Type 2 belts (combination lap and shoulder belts) at each forward facing outboard designated seating position. Anchorages for Type 1 belts (lap belts) are required at all other designated seating positions (center front and all center rear positions). In a letter dated August 1, 1977, to Volkswagen Corporation, the agency issued an interpretation stating that single, diagonal automatic belts may be used at any seating position for which Type 2 belts are otherwise required under Safety Standard No. 208. The agency has never stated, however, that anchorages for single, diagonal automatic belts (2-point anchorages) satisfy the requirements of Safety Standard No. 210 for Type 2 anchorages (3-point anchorages).

Therefore, Type 2 anchorages are required even in vehicles equipped with single, diagonal automatic belts. This does not mean, however, that an individual wishing to use a child restraint system at the right front passenger position in these vehicles could easily install a lap belt. Although the lower outboard anchorages in vehicles with single, diagonal automatic belts would be unused and thus available for installation of a lap belt, the inboard anchorage of some of these systems might not be suitable for that purpose. Volkswagen has stated, for example, that it would be difficult to install a lap belt with their single, diagonal belt since the inboard anchorage is only designed to accommodate the automatic belt. The same would likely be true with other automatic belt designs. If this is so, persons would be discouraged from installing lap belts to secure child restraint systems.

In light of these facts, this notice proposes to amend Safety Standard No. 210 to require that vehicles equipped with automatic restraint systems at the right front designated seating position shall have separate anchorages at that position for the installation of Type 1 lap belts. These vehicles would not be required to have both Type 2 anchorages (3-point) and Type 1 anchorages. Instead, they could have 2-point anchorages for the automatic belt and Type 1 anchorages for the lap belt. (This assumes that three of the anchorage points satisfy the location and other requirements of the standard for Type 2 belts.) Therefore, for some vehicles the proposal would require one more anchorage than the existing requirement, an additional inboard anchorage.

At the current time, the agency is not proposing to require all vehicles equipped with automatic belts to also have lap belts (whether automatic or manual), as requested by the Physicians for Automotive Safety. The agency has tentatively concluded that the availability of lap belt anchorages for the benefit of those persons who wish to install lap belts to secure child restraints should be sufficient. Specific comment on this question is solicited, however, to supplement the comments received when the same issue was raised in the notice of proposed rulemaking on Standard No. 213, *Child Restraint Systems*.

In addition to the proposal for lap belt anchorages, this notice also proposes requirements for child restraint tether strap anchorages. The goal of the second proposal is to encourage tether strap use by making it possible for motorists to easily attach the tether straps to their vehicles and to save the time and cost of having a dealer or garage make the installation for them.

Nearly 70 percent of all child restraint systems used in the United States are equipped with tether straps which are designed to supplement the vehicle seat belt in securing the child restraint. This type of dual attachment contributes substantially to the stability and effectiveness of the child restraint during crashes. Various tests indicate that when the tether strap is properly attached and the seat belt is properly tightened, these systems offer substantial protection in both frontal and side impact collisions. In simulated 20 and 30 mph crash tests involving both live primates and test dummies, tether strap systems provided considerably better head protection than systems without tether straps. Unfortunately, surveys indicate that tether straps are left unattached by motorists approximately 50 percent of the time, thus greatly diminishing the potential effectiveness of this type child restraint.

For child restraints used in front seats, the rear seat belts can be used for attachment of the tether straps (provided that the rear seats are not occupied). However, in rearmost seating positions or in vehicles having only one row of seats, design and installation of special anchorages is required for attachment of child seat tether straps.

The agency believes that one of the major reasons for this neglect is the inability to install anchorages easily in most vehicles. Considerable difficulty and expense are often encountered by motorists who either attempt themselves to install tether anchorages or go to a garage or automobile dealer for that purpose. Much of the difficulty arises from the fact that in current designs of a large number of vehicles provisions are not made for installation of these anchorages. This difficulty is compounded by the lack of readily available and definitive information on where the anchorages could or should be installed in specific vehicles. These twin difficulties make many dealers and garages reluctant to attempt the installation. Even in cases in which fairly specific installation instructions are available, motorists as well as dealers and garages may still be reluctant to attempt installation due to the caveats in those instructions. For example, motorists are advised to drill the anchorage hole in a place clear of the fuel, brake and exhaust systems and to properly seal the hole when the anchorage has been installed to prevent exhaust fumes from intruding into the passenger compartment. Motorists may be hesitant to operate a drill underneath their vehicles in the vicinity of the fuel tank and lines, thus forcing them to incur the time and cost involved in seeking the help of a garage or dealer.

The notice of proposed rulemaking on Standard No. 213 raised the issue of tether anchorages in motor vehicles and requested comments on two possible ways to promote the use of tether-type child restraint systems. The first method discussed was to require vehicle manufacturers to install tether anchorages as standard equipment. The second method was to require vehicle manufacturers to inform new vehicle purchasers of the proper locations to

install anchorages for each rear passenger seating position.

These requirements were endorsed by the Insurance Institute for Highway Safety, the American Academy of Pediatrics, the Department of Public Health of Tennessee, and the Michigan Office of Highway Safety. These groups stated that the availability of tether anchorages or predrilled holes for such anchorages, together with appropriate warnings and instructions to vehicle purchasers, would contribute to a substantial increase in the proper use of child restraints equipped with tether straps.

Only three manufacturers responded to the questions about tether anchorages raised in the Standard No. 213 notice, i.e., General Motors Corporation, Peugeot and Renault. General Motors agreed that it would be reasonable to require manufacturers to identify the proper locations for installation of the anchorages, but argued that a requirement for furnishing the anchorages as standard equipment would probably not result in any increase in tether strap use or proper attachment of tethers. The company also stated that a tether anchorage requirement would impose an unjustified expense on the majority of automobile purchasers who have no need for tether anchorages. The agency notes, however, that General Motors provides in its 1979 and 1980 sedans pre-punctured holes to facilitate the installation of tether anchorages.

Peugeot and Renault stated that child restraint manufacturers should not be allowed to dictate anchorage location by varying the location of the tether strap on the back of the child restraint. To avoid this, they stated that the anchorage location should be specified by regulation, such as has been done in a proposal by the Economic Commisson for Europe (ECE). The agency agrees with this recommendation and has designed the requirements proposed in this notice to be in harmony with the proposed ECE regulation.

The automotive and child restraint industries have also recognized these problems and the "Restraint Systems Subcommittee" of the Society of Automotive Engineers has been working on the design guidelines for resolution of these problems. This NPRM has also tentatively adopted most of the guidelines recommended by this subcommittee.

For sometime the NHTSA has been concerned that children in the age group 5–12 years old are being transported essentially unprotected in automobiles. These children are too big to fit into child restraints and may be too short to use shoulder belts designed for adults. Currently, unique restraints for these older children are available and include booster seats and shoulder harnesses. Use of these restraints would be facilitated by the proposed rule since the restraints require a tether anchorage.

The NHTSA's proposal would require all passenger cars, trucks and multipurpose passenger vehicles with a GVWR of 10,000 pounds or less to be equipped with tether anchorages, including the anchorage hardware or bracket necessary for the attachment of the tether-strap hook (i.e., the anchorge would have to be complete and ready for use so that vehicle owners would not have to add further hardware or devices.) The agency is seeking comment, however, on whether to give manufacturers the option of providing pre-drilled holes for the installation of tether anchorages instead of installing the anchorage hardware. The proposed rule specifies the two alternatives as options (anchorage hardware or pre-drilled holes), and sets forth requirements for the pre-drilled holes if that option is included in any final rule. It must be pointed out, however, that the agency has tentatively concluded that complete anchorage hardware should be required for at least one of the rear seating positions, preferably the center position since that is the safest position for a child to be placed. The agency believes that parents will be much more likely to use tether straps if the anchorage hardware is visible and readily available for easy attachment of the tether hook, and if they are not required to install the hardware themselves or have a garage make the installation for them. The added cost of requiring that anchorage hardware be present for at least one seating position is minimal and the benefits achievable in increasing proper child restraint usage are expected to be significant.

For the pre-drilled hole option included in this notice, the proposal specifies that the pre-drilled holes shall be threaded if, because of the vehicle design, there is not access to both sides of the hole (such that a nut and bolt could not be used to anchor the tether). This would occur, for example, if the vehicle under-structure made access to the hold impossible without the use of special tools or the removal of portions of the vehicle. Special tools would include any tool not likely to be owned by the typical vehicle owner.

In vehicles in which punctured holes would create a sealing problem against exhaust fumes, such as hatchbacks and station wagons, the agency would possibly include a provision for a stamped depression approximately 2 mm deep in lieu of a predrilled hole, if both sides of the hole would be accessible for installation of anchorage hardware. The depression would locate and facilitate the drilling of the anchorage hole.

The agency is also considering making special provision for vehicles such as some hatchbacks or station wagons in which the installation of an anchorage for the center seating position might be difficult because of structural problems. For example, the center portion of the floor might require considerable strengthening in order to sustain the loads generated by the child restraint system, whereas the outboard portions of the floor would have sufficient underlying vehicle structure to take the load. The availability of a center anchorage may not be a prerequisite for use of the center seating position. Some child restraint system manufacturers have demonstrated a Y-shaped tether attachment that runs from the restraint system to the two outboard anchorages. Accordingly, the agency would consider allowing the manufacturers of such vehicles to dispense with a center anchorage if they increase the strength of the outboard anchorages sufficiently so that the two anchorages can simultaneously withstand combined forces totalling 4,500 pounds, the equivalent of three children and their restraint systems. Comment is requested on the wording for this special provision and on the availability and cost of the Y-shaped tether attachment. The exemption would only be allowed if Y-shaped tethers were readily available consumers.

Comment is specifically requested whether the tether anchorage requirement should apply to the second row of seats in vehicles having more than two rows (i.e., vehicles in which the second row is not the rear seat). With respect to a passenger van having three rows of seats, applying the requirement only to the rear (i.e., third row would result in the seemingly impractical arrangement of the young users of child restraint systems riding two rows behind the driver. Although the seat belts of the rearmost row of seats could be used for attachment of tether straps from the second row of seats, this would not be possible if the rearmost row of seats is folded down, which is often the case in station wagons.

Comment is also requested on whether the anchorages and holes should be required to be visible to serve as a reminder of their presence and to facilitate locating and use. Although

cars are currently required to have anchorages for Type 2 seat belts in the left and right rear seats, few persons know that the anchorages are present, much less where they are located, since the anchorages are covered with fabric or some other material. Even if the vehicle's owner manual enabled motorists to locate covered child restraint anchorages or holes, motorists might be reluctant to tear through the covering material out of concern for the appearance of their vehicles when their children outgrow child restraints and the attachment hardware is removed. Comment is also requested on what performance requirements, if any, should be set for seals that the manufacturers would have to place on pre-drilled holes located where intrusion of exhaust fumes is a risk. Finally, comment is requested on the hazards that might arise if tether anchorage hardware is removed by vehicle owners and the resulting hole is left unsealed.

The possibility of allowing the use of shoulder belt anchorages as tether anchorages was considered by the agency, since these anchorages are already required for rear outboard designated seating positions. However, there is currently insufficient data concerning the effectiveness of tether straps anchored in these locations, so this alternative is not included in the proposal. The agency does solicit specific comment on this approach from any persons having research data or other information.

In addition to requiring that tether anchorages be present in the rear seats of vehicles, this notice proposes performance requirements regarding the location and strength of these anchorages. Tether anchorages would be required to withstand forces up to 1,500 pounds, since forces this high can be generated by a child and his or her child restraint system during crashes. Comment is requested on whether a higher force level, e.g., 2,000 or 2,500 pounds, should be specified to ensure the adequacy of the anchorages.

The notice also proposes requirements for instructions to be included in the vehicle's owner manual regarding the proper use of child restraint systems, including information concerning the use of tether straps. These instructions must indicate where tether strap anchorages are located in the vehicle and explain how anchorage hardware is to be installed. Additionally, the instructions would have to explain how to install lap belts to secure child restraint systems in vehicles not having lap belts at the front right seating position, and include information conerning where these belts can be purchased.

The agency is also taking this opportunity to propose a requirement that the vehicle owner's manual include information regarding the location of the shoulder belt anchorages that are currently required by the standard for rear outboard designated seating positions. Few people are aware that the anchorages are currently present and, therefore, very few shoulder belts are installed in rear seats. The agency believes the information required by this proposal will lead to increased use of shoulder belts in those rear positions, and greatly increase safety.

The agency has determined that the proposed amendment is not a significant regulation under Executive Order 12221, "Improving Government Regulations," and that a regulatory analysis is not required. A draft regulatory evaluation concerning the proposed requirements has been prepared and placed in the public docket under the docket number and notice number of this notice. That evaluation concludes that child restraint systems are nearly 60 percent effective in reducing deaths and injuries if properly used. The requirements proposed in this notice are expected to enhance the use of child restraint systems and thereby result in substantial fatality and injury reduction. As vehicle owners become aware of the presence of tether anchorages, it is expected that this usage increase will continue to grow. The evaluation also concludes that these benefits can be achieved at a minimum cost to manufacturers and consumers, particularly when tether anchorages are included as part of the original design for new vehicle models.

The engineer and lawyer primarily responsible for the development of this notice are Val Radovich and Hugh Oates, respectively.

In consideration of the foregoing, it is proposed that Safety Standard No. 210 (49 CFR 571.210) be amended as set forth below:

1. A new paragraph, S4.1.3, would be added to read as follows:

S4.1.3 Notwithstanding the provisions of paragraph S4.1.1, vehicles that are not equipped with lap belt assemblies at front outboard passenger seating positions shall have anchorages for Type 1 seat belt assemblies at these positions which consist of, at a minimum predrilled holes threaded to accept ½–13–UNC–2A bolts. The Type 2 belt anchorages required by S4.1.1 may compose part of the anchorages required by this section, or additional or separate anchorages may be provided. The anchorage hardware for convenient attachment of lap belts may be also included at the option of the manufacturer.

2. A new paragraph, S4.1.4, would be added to read as follows:

S4.1.4 Except as otherwise provided in this paragraph, anchorages for the attachment to vehicles of top tether straps on child restraint systems shall be provided for each forward-facing rearmost designated seating position in passenger cars, MPV's and trucks having a GVWR of 10,000 pounds or less. However, in vehicles having only one row of designated seating positions, tether strap anchorages shall be provided for each designated seating position other than the driver's position. Each anchorage shall consist of either (a) complete anchorage hardware or (b) a punctured hole that is 9 millimeters in diameter. If option (b) is chosen by the manufacturer and access to both sides of the hole is not possible without the use of special tools or the removal of a portion of the vehicle, the hole shall be threaded to accept an 8 mm coarse-thread metric bolt 30 mm long (M8). For anchorage locations on the vehicle floor where puncturing the hole required by this paragraph would necessitate sealing the hole to prevent entry of exhaust fumes, a stamped conical depression 2.0 mm deep and having a 120 ± 5° cone angle may be provided intead of that hole, if drilling the depression would create a hole to which access from both sides is possible without the use of special tools or the removal of a portion of the vehicle.

3. A new paragraph, S4.2.3, would be added to read as follows:

S4.2.3 The vehicle anchorage for a tether strap of a child restraint system shall withstand a 1,500 pound force when tested in accordance with S5.3.

4. Existing paragraphs:

S4.2.3 and S4.2.4 would be changed to S4.2.4 and S4.2.5, respectively.

5. A new section, S4.3.3, would be added to read as follows:

S4.3.3 Anchorages for top tether straps of child restraint systems.

S4.3.3.1 Tether strap anchorages shall be located behind each forward facing rearmost designated seating position within the permitted space shown in Figures 1A and 1B with reference to the "shoulder reference point" of a two dimensional manikin described in SAE STANDARD J826 (January 1978). The manikin is positioned with its midsagital plane coninciding with the vertical longitudinal plane passing through the seat design center (median plane) with the seat and seat back in the design position, with its "H" point at the seating reference point and its "torso

line" at the same angle from the vertical as the seat back. The centerline of each anchorage is within a space behind each seat bound by two vertical planes intersecting at the shoulder reference point and each making a 6° angle with the median plane (Figure 1A), by the vehicle floor and by four transverse planes perpendicular to the median plane—one passing through the shoulder reference point and inclined 10° above horizontal, one passing through the shoulder reference point and inclined 60° below horizontal, one cylinderical surface having radius of curvature of 250 mm whose center is at the shoulder reference point and one vertical plane 1000 mm behind the shoulder.reference point (Figure 1B).

S4.3.3.2 Each tether strap anchorage shall be located in a position within the area described in S4.3.3.1 that allows sufficient space for the installation of tether strap attachments.

6. A new section, S5.3, would be added to read as follows:

S5.3 *Seats with tether anchorages.*

S5.3.1 Fold down or removable vehicle seats are adjusted to their normal riding position by means of their own positioning and locking mechanisms.

S5.3.2 In the case of a row of seats for which more than one tether anchorage is required to be installed by S4.1.4, two adjacent anchorages are tested simultaneously in accordance with S5.3.4.

S5.3.3. A washer having the following dimensions is used to transfer loads from the anchor bolt to the vehicle structure:

(a) A hole whose diameter is 9 mm;

(b) A thickness of 3 mm; and

(c) An overall diameter of 62 mm.

Such washer is not used with a pre-threaded anchorage hole.

S5.3.4 Except as provided in S5.3.2, test each tether anchorage separately. Apply a force of 1,500 pounds to each tether anchorage in the forward direction parallel to the vehicle's longitudinal vertical plane and at an angle not greater than 10° below the horizontal. The force is applied by means of a belt strap that is of sufficient length to extend not less than 10 inches forward from the vertical plane touching the rear top edge of the seat back. The belt is fitted at one end with suitable hardware (See Figure 2) for applying the force, and at the other end with a bracket for attachment of the tether anchorage bolt. Force is applied to the belt as shown in Figure 1C. Anchorages located below the horizontal plane that is tangent to the top of the seat back are tested with the belt positioned over the top of the seat back. The 1,500 pound force is applied by means of a belt strap that is of sufficient length and fitted at the end with suitable seat belt brackets for attachment to the tether anchorage bolt. The 1,500 pound force is attained within 30 seconds, with an onset force rate not exceeding 30,000 pounds per second, and is maintained at the 1,500 pound level for at least 10 seconds.

7. A new section, S5.4, would be added to read as follows:

S5.4 Installation instructions and labeling.

S5.4.1 Each vehicle's "owner's manual" shall include a section concerning child restraint systems. This section shall contain a three dimensional diagram showing the locations of the lap belt anchorages specified in paragraph S4.1.3 and the tether strap anchorages (or the holes or depressions for installation of anchorage bolts) specified in paragraph S4.1.4. The owner's manual shall also include printed instructions in the English language describing a step-by-step procedure for installing the anchorage hardware, including diagrams. Information shall also be included concerning the location of the shoulder belt anchorages specified by this standard, for all positions where shoulder belts are not installed. Instructions shall also be given concerning the proper method of using vehicle lap belts to secure a child restraint system in each seating position having such belts. In seating positions not equipped with lap belts, but for which lap belt anchorages are required by this standard, the owner's manual shall include instructions concerning the proper lap belt assembly to be used in the vehicle and instructions concerning the proper routing of the belt assembly and attachment of the assembly to the lap belt anchorages.

The manual shall also include a statement alerting vehicle owners that, according to accident statistics, children are safer when properly restrained in the rear seating positions than in the front seating positions, and that the rear center seating position is probably the safest position of all for children. The following warning shall also be included in the manual, printed in "10-point" type letters:

"WARNING! FOR EFFECTIVE PROTECTION IN AUTOMOBILE ACCIDENTS, CHILDREN SHOULD NOT BE TRANSPORTED UNRESTRAINED. THE PREFERRED RESTRAINTS FOR SMALL CHILDREN ARE INFANT CARRIERS AND CHILD SAFETY SEATS. IF THESE ARE NOT AVAILABLE, CHILDREN SHOULD BE PLACED IN REAR SEATS AND RESTRAINED WITH LAP BELTS IF THEY ARE OLD ENOUGH TO SIT ALONE.

Interested persons are invited to submit comments on the proposal. It is requested but not required that 10 copies be submitted.

All comments must be limited not to exceed 15 pages in length. Necessary attachments may be appended to these submissions without regard to the 15 page limit. This limitation is intended to encourage commenters to detail their primary arguments in a concise fashion.

If a commenter wishes to submit certain information under a claim of confidentiality, three copies of the complete submission, including purportedly confidential information, should be submitted to the Chief Counsel, NHTSA, at the street address given above, and seven copies from which the purportedly confidential information has been deleted should be submitted to the Docket Section. Any claim of confidentiality must be supported by a statement demonstrating that the information falls within 5 U.S.C. section 552(b)(4), and that disclosure of the information is likely to result in substantial competitive damage; specifying the period during which the information must be withheld to avoid that damage; and showing that earlier disclosure would result in that damage. In addition, the commenter or, in the case of a corporation, a responsible corporate official authorized to speak for the corporation must certify in writing that each item for which confidential treatment is requested is in fact confidential within the meaning of section 552(b)(4) and that a diligent search has been conducted by the commenter or its employees to assure that none of the specified items has previously been disclosed or otherwise become available to the public.

All comments received before the close of business on the comment closing date indicated above will be considered, and will be available for examination in the docket at the above address both before and after that date. To the extent possible, comments filed after the closing date will also be considered. However, the rulemaking action may proceed at any time after that date, and comments received after the closing date and too late for consideration in regard to the action will be treated as suggestions for future rulemaking. The NHTSA will continue to file relevant material as it becomes available in the docket after the closing date, and it is recommended that interested persons continue to examine the docket for new material.

Those persons desiring to be notified upon receipt of their comments in the rules docket should enclose, in the envelope with their comments, a self addressed stamped postcard. Upon receiving the comments, the docket supervisor will return the postcard by mail.

(Secs. 103, 119, Pub. L. 89-563, 80 Stat. 718 (15 U.S.C. 1392, 1407); delegations of authority at 49 CFR 1.50 and 501.8)

Issued on December 5, 1980.

Michael M. Finkelstein,

Associate Administrator for Rulemaking.

BILLING CODE 4910-59-M

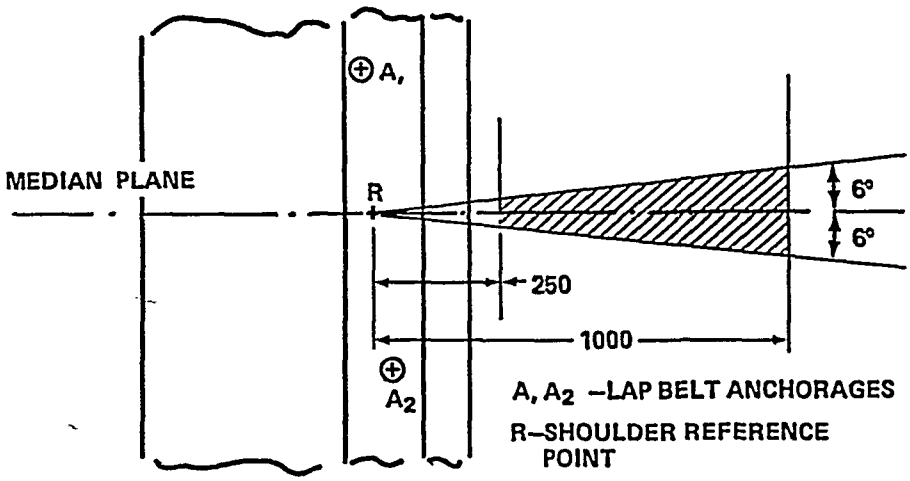

Figure 1A – PLAN VIEW

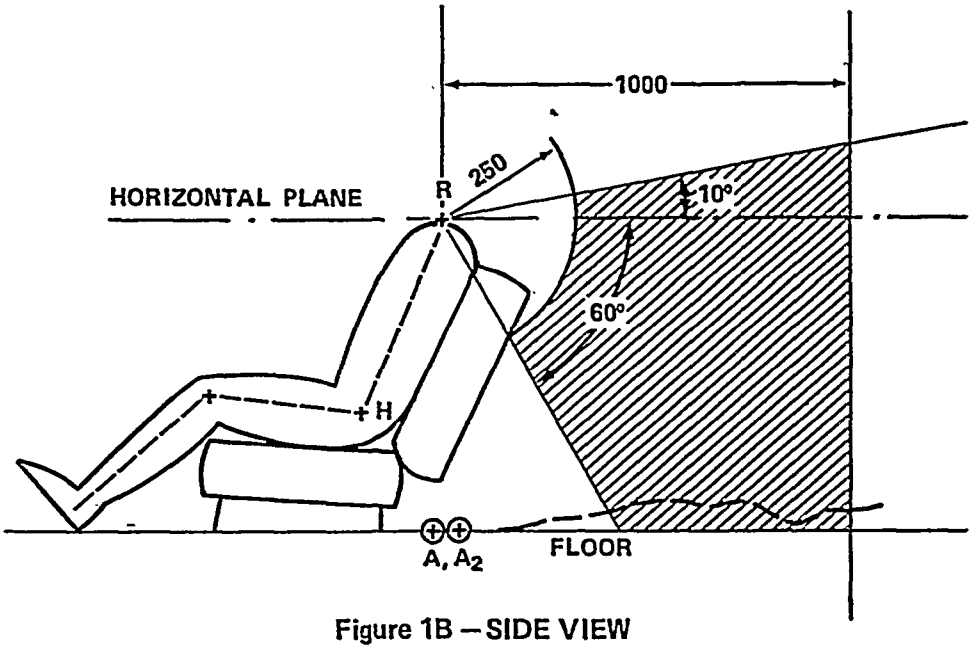

Figure 1B – SIDE VIEW

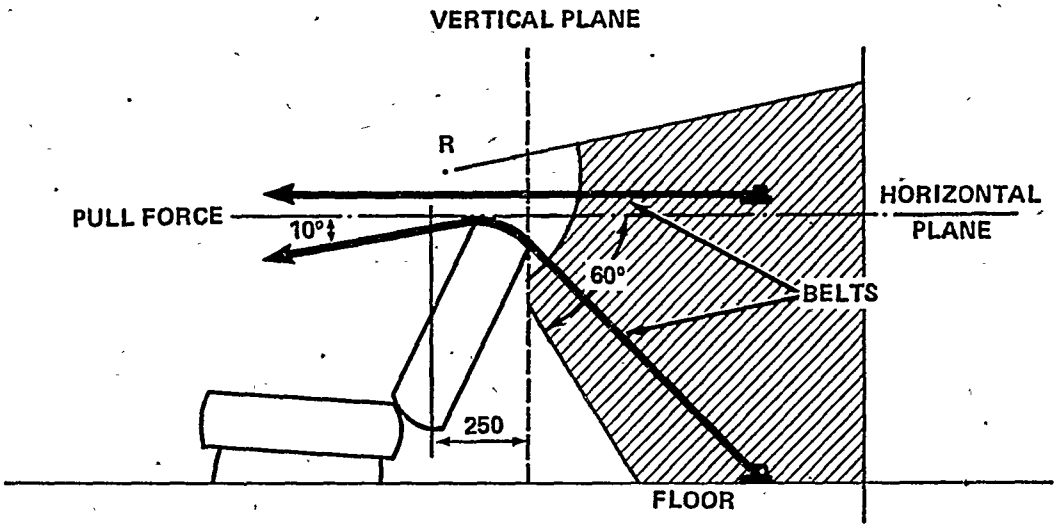

Figure 1C — SIDE VIEW

In Figures 1A, 1B and 1C all dimensions are in millimeters.
Shaded areas are permitted locations for anchorages.

[FR Doc. 80-38445 Filed 12-10-80; 8:45 am]
BILLING CODE 4910-59-C

DEPARTMENT OF COMMERCE

National Oceanic and Atmospheric Administration

50 CFR Part 611

Foreign Fishing for Billfish, Oceanic Sharks, Wahoo, and Mahi Mahi in the Pacific Ocean

AGENCY: National Oceanic and Atmospheric Administration (NOAA)/ Commerce.

ACTION: Approval of preliminary fishery management plan amendment; proposed rulemaking.

SUMMARY: An amendment to the preliminary fishery management plan (PMP) for billfish, oceanic sharks, wahoo and mahi mahi in the Pacific Ocean is approved. The amendment extends the PMP beyond 1980 and provides additional information to comply with Pub. L. 95–354 (the "Processor Preference Amendment"). Regulations to implement the amendment are proposed for public comment.

DATE: Comments must be submitted on or before December 28, 1980.

ADDRESS: Comments should be addressed to: Alan W. Ford, Director, Southeast Region, National Marine Fisheries Service, 300 S. Ferry Street, Terminal Island, California 90731. Telephone 213–548–2575.

FOR FURTHER INFORMATION CONTACT: Alan W. Ford, 213–548–2757.

SUPPLEMENTARY INFORMATION: On July 2, 1978 (43 FR 31374) the NOAA Assistant Administrator for Fisheries approved the PMP for billfish, oceanic sharks, wahoo and mahi mahi in the Pacific Ocean to manage foreign fishing for these species under the Fishery Conservation and Management Act of 1976 (the FCMA) (Pub. L. 94–265).

The specifications of optimum yield, total allowable level of foreign fishing, domestic annual harvest (DAH), and reserve for 1980 have been examined and are considered appropriate for 1981 and for subsequent years, unless amended.

The possibility of direct sales of these species to foreign vessels ("joint ventures") has been examined. There have been no indications that U.S. fishing vessels desire or intend to enter into joint ventures with foreign processing vessels. Most catches are marketed and consumed as fresh fish. To the extent that processing is required, domestic annual processing capacity (DAP) equals or exceeds the expected domestic harvest, plus the "reserve." Hence, joint venture processing capacity (JVP) is specified as zero for 1981 and for subsequent years, unless amended.

The Assistant Administrator has determined that this amendment to the PMP is necessary and appropriate to the conservation and management of Pacific billfish, oceanic sharks, wahoo, and mahi mahi, and that it is consistent with provisions of the FCMA and other applicable laws. He has therefore prepared the amendment and the proposed regulations set forth below. The Assistant Administrator has also determined that the amendment and proposed regulations do not require the preparation of an environmental assessment or an environmental impact statement under the National Environmental Policy Act of 1969, and that the regulation is not a significant one requiring the preparation of a regulatory analysis under Executive Order 12044.

(16 U.S.C., Section 1801, et seq.)

Signed at Washington, D.C., this 3rd day of December 1980.

Robert K. Crowell,

Deputy Executive Director, National Marine Fisheries Service.

A. The Preliminary Fishery Management Plan for Billfish, Oceanic Sharks, Wahoo and Mahi Mahi on the Pacific Ocean is amended as follows:

1. Change the heading of Section II.C.4 and add a new paragraph to read as follows:

II. Description of the Proposed Action

* * * * *

C. The Preliminary Fishery Management Plan

4. *U.S. Capacity, Total Allowable Level of Foreign Fishing (TALFF) and Joint Venture Processing (JVP).*

* * * * *

There have been no indications that U.S. fishing vessels desire or intend to enter into joint ventures with foreign processing vessels. Most catches are marketed and consumed as fresh fish. To the extent that processing involves more sophisticated technology, the domestic processing capacity (DAP) equals or exceeds the expected U.S. harvest plus the "reserve." Hence, joint venture processing capacity (JVP) is specified as zero.

* * * * *

B. For the reasons set out in the preamble, it is proposed that Part 50 CFR 611.81 be amended as follows:

1. Paragraph 611.84(b)(4) is amended by revising the title of paragraph (b)(4) and adding (b)(4)(iii) as follows:

§ 611.84 Pacific billfish, oceanic sharks, wahoo, and mahi mahi fishery.

* * * * *

(b) * * *

4. *Total Allowable Level of Foreign Fishing (TALFF), Joint Venture Processing (JVP), National Allocations, and Reserves.* * * *

(iii) *Joint venture processing.* The amounts of Joint Venture Processing are stated in Appendix I of Section 611.20.

* * * * *

2. 50 CFR Part 611.20, Appendix 1, is amended by revising section 3.B as follows:

§ 611.20 Total allowable level of foreign fishing.

* * * * *

Appendix 1.—OY, DAH, JVP, TALFF

* * * * *

3. Western Pacific Ocean Fisheries

* * * * *

B. Pacific billfish and sharks fishery. Express JVP and DAP as zero for all species in all areas.

* * * * *

[FR Doc. 80-38433 Filed 12-10-80; 8:45 am]
BILLING CODE 3510-22-M

50 CFR Part 611

Snail Fishery of the Eastern Bering Sea Preliminary Fishery Management Plan Amendment and Proposed Regulations

AGENCY: National Oceanic and Atmospheric Administration (NOAA)/ Commerce.

ACTION: Approval of preliminary fishery management plan amendment; proposed rulemaking.

SUMMARY: An amendment to the preliminary fishery management plan (PMP) for the Snail Fishery of the Eastern Bering Sea is approved. The amendment extends the PMP beyond 1980 and provides additional information to comply with Pub. L. 95–354 (the "Processor Preference Amendment"). Regulations to implement the amendment are proposed for public comment.

DATE: Comments must be submitted on or before December 29, 1980.

ADDRESS: Comments should be addressed to Denton R. Moore, Chief, Permits and Regulations Division, National Marine Fisheries Service, 3300 Whitehaven Street, N.W., Washington, D.C. 20235.

FOR FURTHER INFORMATION CONTACT: Robert McVey, Director, Alaska Region, National Marine fisheries Service, P.O.

Box 1668, Juneau, Alaska, 99802. Telephone 907-586-7221.

SUPPLEMENTARY INFORMATION: In 1977, the NOAA Assistant Administrator for Fisheries prepared a PMP to manage foreign fishing for snails under the Fishery Conservation and Management Act of 1976 (the FCMA) (Pub. L. 94-265). An environmental assessment on adopting the PMP determined that there were no significant environmental impacts. The PMP was published in the Federal Register on February 15, 1977 (42 FR 9334).

In 1980, the total optimum yield of 3,000 metric tons (m.t.) of edible meat (approximately 12,000 m.t.) was allocated entirely to the total allowable level of foreign fishing (TALFF). The same amount is to be allocated to the annual TALFF starting in 1981. The annual TALFF will remain at 3,000 m.t. until amended.

As required by Pub. L. 95-354, the National Marine Fisheries Service (NMFS) has considered the likelihood that United States fishermen will harvest and deliver snails to foreign processors ("joint ventures"). NMFS has concluded that no joint venture will take place in 1981. Therefore, since there will be no domestic harvest, and no domestic processing (i.e., zero DAP), joint venture processing capacity (JVP) is zero.

These specifications of optimum yield, TALFF, domestic annual harvest (DAH), DAP and JVP have been examined and are considered appropriate for 1981 and for subsequent years, unless amended.

The Assistant Administrator has determined that this amendment to the PMP is necessary and appropriate to the conservation and managment of eastern Bering Sea snail resources, and that the amendment is consistent with provisions of the FCMA and other applicable laws. He has therefore prepared the amendment and the proposed regulations set forth below. The Assistant Administrator also has determined that this action does not require the preparation of an environmental assessment or an environmental impact statement under the National Environmental Policy Act of 1969, and that it does not constitute a significant regulation requiring the preparation of a regulatory analysis under Executive Order 12044. He has further determined that the amendment and regulations will be carried out in a manner that do not directly affect the Alaska coastal zone.

(16 U.S.C., Section 1801, *et seq.*)

—Signed at Washington, D.C., this day of December 1980.

Robert K. Crowell,

Deputy Executive Director, National Marine Fisheries Service.

A. The Preliminary Fishery Management Plan (42 FR 9334) for the Snail Fishery of the Eastern Bering Sea is amended by adding the following paragraph to section 2.0(D).

2.0 Description of the Fishery

* * * * *

D. Impact on Domestic Fishery.

* * * * *

Domestic fishermen have shown no interest in harvesting and delivering snails to foreign processors (joint ventures).

* * * * *

B. For the reasons set out in the preamble, it is proposed that 50 CFR Part 611 be amened as follows:

1. 50 CFR Par 611 is amended by revising paragraph 611.94(b)(2) to read as follows:

§ 611.94 Snail Fishery.

* * * * *

(b) * * *

(2) *TALFF, DAH, DAH JVP, Reserve.* The annual total allowable level of foreign fishing (TALFF), domestic annual harvest (DAH), domestic annual processing (DAP) joint venture processing (JVP), and reserve for snails are listed in Appendix 1, to Section 611.20. These specifications are valid for each calendar year, unless amended.

* * * * *

2. 50 CFR Part 611.20, Appendix 1 is amended by revising section 4.D. as follows:

§ 611.20 Total allowable Level of foreign fishing.

* * * * *

Appendix 1. OY, DAH, JVP, TALFF.

* * * * *

4. Alaska Fisheries. * * *

D. Snail Fishery:

Express DAH, DAP, JVP, and reserves as zero in each case.

* * * * *

[FR Doc. 80-38432 Filed 12-10-80; 8:45 am]

BILLING CODE 3510-22-M

Notices

Federal Register
Vol. 45, No. 240
Thursday, December 11, 1980

This section of the FEDERAL REGISTER contains documents other than rules or proposed rules that are applicable to the public. Notices of hearings and investigations, committee meetings, agency decisions and rulings, delegations of authority, filing of petitions and applications and agency statements of organization and functions are examples of documents appearing in this section.

DEPARTMENT OF AGRICULTURE

Agricultural Marketing Service

Hardin County Stock Yards Savannah, Tennessee; Posted Stockyards

Pursuant to the authority delegated under the Packers and Stockyards Act, 1921, as amended (7 U.S.C. *et seq.*), it was ascertained that the livestock markets named below were stockyards within the definition of that term contained in section 302 of the Act, as amended (7 U.S.C. 202), and notice was given to the owners and to the public of posting notices at the stockyards as required by said section 302, on the respective dates specified below.

Facility No., name, and location of stockyard	Date of posting
Tennessee	
TN-176 Hardin County Stock Yards, Savannah.	Aug. 14, 1980.

Done at Washington, D.C., this 5th day of December, 1980.

Jack W. Brinckmeyer,
Chief, Rates and Registrations Branch, Livestock Marketing Division.

[FR Doc. 80-38381 Filed 12-10-80; 8:45 am]
BILLING CODE 3410-02-M

Farmers Home Administration

[F.C.D.A. No. 10.422 Business and Industrial Loans]

Business and Industrial Loans; Insured Loan Interest Rates

AGENCY: Farmers Home Administration, USDA.

ACTION: Notice.

SUMMARY: Notice is hereby given by the Farmers Home Administration that the current rate of interest for insured business and industrial loans, established pursuant to 7 CFR 1980.423(b) is as follows:

a. Insured loans for other than public bodies in rural areas will be at the rate of fourteen percent (14%). This rate will remain in effect until a change is published in the Federal Register.

EFFECTIVE DATE: December 11, 1980.

FOR FURTHER INFORMATION CONTACT: Mr. LaVerne A. Isenberg, Room 4118, South Building, Farmers Home Administration, USDA, Washington, DC 20250. Phone: 202-447-4871.

This notice does not directly affect any FmHA program or projects which are subject to A-95 clearinghouse review.

Dated: November 24, 1980.

James E. Thornton,
Associate Administrator, Farmers Home Administration.

[FR Doc. 80-38273 Filed 12-10-80; 8:45 am]
BILLING CODE 3410-07-M

Forest Service

[Docket No. 80-12753]

Land and Resource Management Plan, National Forests in Florida; Notice of Intent To Prepare an Environmental Impact Statement; Correction

AGENCY: Forest Service, USDA.

ACTION: Proposal; correction.

SUMMARY: This document corrects the Notice of Intent that appeared at page 27965 in the Federal Register of Friday, April 25, 1980 (45 FR 27965), listing of counties to be included in the proposed plan for the following National Forest lands:

Apalachicola National Forest in Franklin County; Choctawhatchee National Forest in Okaloosa, Santa Rosa, and Walton Counties.

These corrections are necessary for the following reasons:

1. Franklin County was inadvertently omitted in the original notice.

2. The Choctawhatchee National Forest was recently re-activated when 675 acres excessed by the U.S. Air Force was returned to National Forest status in accordance with PL 76-668. This law which transferred the entire Choctawhatchee National Forest to the War Department for military purposes in 1940 just prior to World War II provided for their return to National Forest status when no longer needed for military purposes.

FOR FURTHER INFORMATION CONTACT: Raymond K. Mason, ID Team Leader, National Forests in Florida, P.O. Box 13549, Tallahassee, Florida 32306.

Dated: December 4, 1980.

Lawrence M. Whitfield,
Regional Forester.

[FR Doc 80-38353 Filed 12-10-80; 8:45 am]
BILLING CODE 3410-11-M

Southern California Subcommittee of the Pacific Crest National Scenic Trail Advisory Council; Meeting

The Southern California Subcommittee of the Pacific Crest National Scenic Trail Advisory Council will meet at 9:30 a.m. on Thursday, February 26, 1981. The meeting location will be the 2nd floor conference room, Angeles National Forest Headquarters, 150 South Los Robles Street, Pasadena, California.

The purpose of the meeting is to review the alternatives for the pending Pacific Crest National Scenic Trail Comprehensive Plan for acquisition, management, development, and use of the trail. Other policy matters concerning the trail may also be considered.

The meeting will be open to the public. Persons who wish additional information should contact Alan Lamb, Recreation Staff, Pacific Southwest Region, Forest Service, 630 Sansome Street, San Francisco, California 94111 Phone (415) 556-6983.

Dated: December 3, 1980.

Zane G. Smith, Jr.,
Regional Forester, Pacific Southwest Region.

[FR Doc. 80-38454 Filed 12-10-80; 8:45 am]
BILLING CODE 3410-11-M

CIVIL AERONAUTICS BOARD

[Docket 38819]

Trans World Airlines, Inc., Civil Penalties for Violations of Part 250; Cancellation of Hearing

Notice is hereby given that the hearing in the above entitled matter, now assigned to be held on December 9, 1980 (45 FR 76504, November 19, 1980), is cancelled.

Dated at Washington, D.C. December 4, 1980.

Joseph J. Saunders,

Chief Administrative Law Judge.

[FR Doc. 80-38415 Filed 12-10-80; 8:45 am]

BILLING CODE 6320-01-M

DEPARTMENT OF COMMERCE

Foreign-Trade Zones Board

[Docket No. 18-80]

Foreign-Trade Zone No. 41, Milwaukee, Wisconsin; Application for Expansion of Existing General-Purpose Zone and Establishment of Subzones

Notice is hereby given that an application has been submitted to the Foreign-Trade Zones Board (the Board) by the Foreign-Trade Zone of Wisconsin, Ltd. (WFTZ), a Wisconsin corporation and grantee of Foreign-Trade Zone No. 41, requesting authority to expand its general-purpose zone in the Northwestern Industrial Park in Milwaukee to include three additional sites, and to establish special-purpose subzones in Kenosha and Manitowoc, Wisconsin, within the Racine and Manitowoc Customs ports of entry. The application was submitted pursuant to the provisions of the Foreign-Trade Zones Act of 1934, as amended (19 U.S.C. 81a-81u), and the regulations of the Board (15 CFR Part 400). It was formally filed on November 25, 1980. Foreign-Trade Zone of Wisconsin, Ltd. was established in 1977 as Foreign-Trade Zone of Greater Milwaukee, Inc. under Chapter 180 of the Wisconsin Statutes for the purpose of establishing and operating a foreign-trade zone. The corporation changed its name to its current one on December 5, 1979. It is authorized to make this proposal under Chapter 110 of the Wisconsin Laws of 1977, approved October 13, 1977.

Zone No. 41 was authorized by the Board on September 29, 1978 (Board Order 136) as a warehouse/distribution and assembly facility on a 5.8-acre site within the 650-acre Northwestern Industrial Park, owned by the City of Milwaukee. The grantee constructed a 47,000 square foot warehouse on the site and activated the zone in late 1979.

The application requests authority for the expansion of Zone No. 41 to include three parcels of 6, 11, and 23 acres within the industrial park. The 6-acre site, located at 8501 W. Tower, adjacent to the approved site, is owned and occupied by H. Barkow, Inc. Barkow customizes truck and industrial vehicle chassis by adding special cabs, racks, boxes, lifts and other equipment to suit customers' specific needs. The company purchases domestic and imported chassis and domestic fabricated steel, finishes and assembles the steel parts, and attaches the assembled equipment to the chassis. A portion of the finished vehicles are expected to be exported from the zone.

The 11-acre site, located at W. Calumet and N. 81st Streets, will contain the operations of Schmidt Engineering and Equipment Co., Ltd., a subsidiary of Ing. Alfred Schmidt GMBH of West Germany. Schmidt plans to use the zone to assemble utility vehicles for snow removal, weed cutting, hoisting and excavation through use of interchangable attachments. The company expects to import Mercedes truck chassis through J. I. Case, import the attachment components for the equipment from its parent company in Germany, and assemble the equipment. Schmidt proposes to export a portion of the finished products. The zone site is owned by the city and will be leased to Schmidt.

The 23-acre site, located on West Bradley Rd. between 86th and 87th Streets, has been designated for expansion, since the existing 5.8-acre general-purpose site cannot accommodate the number of firms currently considering use of the zone. The site will be activated as needed.

The special-purpose subzone in Kenosha would be for the American Motors Corporation (AMC) assembly plant. It will consist of four sites: the main plant at 5626—26th Avenue, Kenosha; the Lakefront Plant, 5th Avenue and 57th Street; the automotive shipping headquarters on 60th Street; and the Motor Transport Garage, at highways 158 and 192. The four sites operate as one integrated assembly facility known as the AMC Kenosha plant. They constitute all the property owned by AMC in Kenosha. Beginning in 1982 AMC plans to use the plant to assemble Renault automobiles from imported and domestically-produced components, gradually increasing its use of domestic parts.

The special-purpose subzone in Manitowoc would be for the operations of Muskegon Piston Ring Company, Inc., Wausau Division, located at 2318 Waldo Blvd., Muskegon, Wisconsin. The company is a wholly-owned subsidiary of Goetze A.G. of West Germany. The Manitowoc facility consists of a single building purchased from the Oil-Rite Corporation. Muskegon is planning to use this plant to machine circular iron castings into piston rings through grinding, turning, milling and coating operations. Because of materials not commercially available in the U.S., some of the castings will be imported. The company expects to export about one-third of the finished products.

In accordance with the Board's regulations, an examiners committee has been appointed to investigate the application and report thereon to the Board. The committee consists of Ben L. Irvin (Chairman), Deputy Director, Office of Compliance, Import Administration, U.S. Department of Commerce, Washington, D.C. 20230; W. David Stevens, District Director, U.S. Customs Service, 628 East Michigan Street, Milwaukee, Wisconsin 53202; and Lt. Colonel Howard N. Nicholas, District Engineer, U.S. Army Engineer District Chicago, 219 South Dearborn Street, Chicago, Illinois 53202.

As part of its investigation, the Examiners Committee will hold a public hearing on January 8, 1981, beginning at 9:00 a.m., at the Milwaukee Area Technical College, Technical Building Auditorium, 1101 North 6th Street, Milwaukee. The purpose of the hearing is to help inform interested persons about the proposal, to provide an opportunity for their expression of views, and to obtain information useful to the examiners.

Interested parties are invited to present their views at the hearing. They should notify the Board's Executive Secretary of their desire to be heard in writing at the address below or by phone (202/377-2862) by January 2, 1981. Instead of an oral presentation, written statements may be submitted in accordance with the Board's regulations to the examiners committee, care of the Executive Secretary at any time from the date of this notice through February 6, 1981. Evidence submitted during the post-hearing period is not desired unless it is clearly shown that the matter is new and material and that there are good reasons why it could not be presented at the hearing. A copy of the application and accompanying exhibits will be available during this time for public inspection at each of the following locations:

U.S. Department of Commerce District Office, Federal Building, U.S. Courthouse, 517 East Wisconsin Ave., Room 606, Milwaukee, Wisconsin 53202.

Office of the Executive Secretary, Foreign-Trade Zones Board, U.S. Department of Commerce, Room 2006, 14th and Constitution Ave., N.W., Washington, D.C. 20230.

Dated: December 5, 1980.

John J. Da Ponte, Jr.,

Executive Secretary.

[FR Doc. 80-38384 Filed 12-10-80; 8:45 am]

BILLING CODE 3510-25-M

International Trade Administration

California Institute of Technology; Decision on Application for Duty-Free Entry of Scientific Article

The following is a decision on an application for duty-free entry of a scientific article pursuant to Section 6(c) of the Educational, Scientific, and Cultural Materials Importation Act of 1966 (Public Law 89-651, 80 Stat. 897) and the regulations issued thereunder as amended (15 CFR 301).

A copy of the record pertaining to this decision is available for public review between 8:30 a.m. and 5:00 p.m. in Room 3109 of the Department of Commerce Building, 14th and Constitution Avenue, N.W., Washington, D.C. 20230.

Docket No. 80-00162. Applicant: California Institute of Technology, Pasadena, California 91125. Article: Nuclear Magnetic Resonance Spectrometer, Model JNM/FX-9OQ and Accessories. Manufacturer: JEOL Ltd., Japan. Intended use of article: The article is intended to be used to examine samples of organic and inorganic materials produced in various research groups in the Department of Chemistry. Research projects to be undertaken will include:

(a) Activation of Molecular Nitrogen, Carbon Monoxide, and Hydrocarbons With Organometallic Compounds of the Early Transition Metals. Organometallic complexes will be examined by ^{13}C, ^{1}H, ^{2}H, ^{31}P, ^{15}N F.T. NMR.

(b) chemistry of 1,1-Diazenes—Low concentrations, low temperature samples of these reactive molecules will be examined by ^{13}C, ^{1}H, ^{2}H, ^{15}N, F.T. NMR. The structures of organic precursors will be routinely examined.

(c) Molecular Recognition of DNA by Small Molecules—^{13}C, ^{1}H, ^{2}H, ^{29}Si, ^{31}P F.T. NMR spectra of small synthetic organic molecules which can serve as bis-intercalators will be obtained.

(d) Studies in Organic Synthesis—Organic natural products and their synthetic precursors require $^{13}C(^{17}O)$ for identification.

(e) Copper (I) coordination Chemistry—Copper complexes will be examined by ^{65}Cu, ^{13}C, ^{17}O, and ^{1}H NMR spectroscopy. These include complexes with both polydentate synthetic and polypeptide ligands.

(f) Metal Catalyzed Reactions of Olefins—Alkyl complexes of Ni, Ti, Pd, Pt and Rh will be studied by using ^{19}F, ^{13}C, ^{1}H, ^{31}P, ^{2}H, and ^{195}Pt NMR. Similar work will be carried out on catalytic systems.

(g) Polymer Attached Catalysts—Metal Complexes attached by covalent links to swellable polymers will be studied by ^{31}P, ^{13}C and, ^{19}F NMR.

(h) Preparation of Theoretically Interesting Organic Molecules—The precursors of reactive intermediates will be examined by ^{1}H, ^{13}C, ^{15}N, and ^{2}H NMR.

(i) Use of Sugars As Chiral Synthetic Intermediates—Highly oxygenated species will be examined by ^{13}C, and ^{17}O NMR.

(j) Dynamics and Structure of Enzymes—Enyzmes from species grown on enriched ^{15}N amino acids are to be studied by ^{15}N NMR. This research will be carried out by graduate students as part of their education for which they received formal course credit.

Comments: No comments have been received with respect to this application.

Decision: Application approved. No instrument or apparatus of equivalent scientific value to the foreign article, for such purposes as this article is intended to be used, was being manufactured in the United States at the time the foreign article was ordered April 24, 1979.

Reasons: This application is a resubmission of Docket Number 79-00292 which was denied without prejudice to resubmission on October 18, 1979 for informational deficiencies. The foreign article provides the capability for measuring T_1-rho, the spin-lattice relaxation time in the rotating frame. The National Bureau of Standards advises in its memorandum dated October 8, 1980 that (1) the capability of the foreign article described above is pertinent to the applicant's intended purpose and (2) it knows of no domestic instrument or apparatus of equivalent scientific value to the foreign article for the applicant's intended use.

The Department of Commerce knows of no other instrument or apparatus of equivalent scientific value to the foreign article, for such purposes as this article is intended to be used, which was being manufactured in the United States at the time the foreign article was ordered.

(Catalog of Federal Domestic Assistance Program No. 11.105, Importation of Duty-Free Educational and Scientific Materials)

Frank Creel,

Acting Director, Statutory Import Programs Staff.

[FR Doc. 80-38333 Filed 12-10-80; 8:45 am]
BILLING CODE 3510-25-M

Southern Illinois University—Edwardsville; Decision on Application for Duty-Free Entry of Scientific Article

The following is a decision on an application for duty-free entry of a scientific article pursuant to Section 6(c) of the Educational, Scientific, and Cultural Materials Importation Act of 1966 (Public Law 89-651, 80 Stat. 897) and the regulations issued thereunder as amended (15 CFR 301).

A copy of the record pertaining to this decision is available for public review between 8:30 A.M. and 5:00 P.M. in Room 3109 of the Department of Commerce Building, 14th and Constitution Avenue, N.W., Washington, D.C. 20230.

Docket No. 80-00057. Applicant: Southern Illinois University-Edwardsville, Edwardsville, Illinois 62026. Article: NMR Spectrometer, Model FX-60Q and Accessories. Manufacturer: JOEL Ltd., Japan. Intended use of article: the article is intended to be used for research projects which involve the determination of NMR spectra of hydrogen, Carbon-13, and fluorine and nitrogen-15 nuclei. The compounds used for these studies include those used in physical, analytical, medicinal chemistry, and environmental chemistry. Titles of the research projects in which this article will be used include the following:

1. Inorganic and Bioinorganic Binding Mechanisms.
2. Separation Methods.
3. NMR in Analysis of Drugs.
4. Structural Synthetic Medicinal Chemistry of Fluorine containing compounds.
5. Structure and Chemistry of Platinum containing Anti-tumor Agents.
6. Rearrangements of Photosensitive Organic Molecules.
7. NMR studies of Pharmaceutical Compounds.
8. The Chemistry of α—Chymotrysin.
9. Chemical characteristics of cyanide containing waste water. Experiments conducted will provide structural information about the materials under study and will help to elucidate the chemical environment of these compounds. The article will also be used to teach undergraduate and graduate students various analytical techniques in the determination of molecular structures and chemical identification of compounds in a course entitled "Instrumental Methods of Analysis."

Comments: No comments have been received with respect to this application.

Decision: Application approved. No instrument or apparatus of equivalent scientific value to the foreign article, for such purposes as this article is intended to be used, was being manufactured in the United States at the time the foreign article was ordered (May 15, 1978).

Reasons: This application is a resubmission of Docket Numbers 78-

00263 and 79-00208 which were denied without prejudice to resubmission on October 20, 1978 and August 24, 1979, respectively, for informational deficiencies. The foreign article provides the capability for measuring T-rho (spin-lattice relaxation in the rotating frame). The Model XL 200 manufactured by Varian provides this capability. However, at the time the foreign article was ordered the most closely comparable domestic instrument was Varian's Model FT-80A. The FT 80A did not provide T-rho. The Department of Health and Human Services advises in its memorandum dated July 29, 1980 that (1) the capability of the foreign article described above is pertinent to the applicant's intended purpose and (2) it knows of no domestic instrument or apparatus of equivalent scientific value to the foreign article for the applicant's intended use.

The Department of Commerce knows of no other instrument or apparatus of equivalent scientific value to the foreign article, for such purposes as this article is intended to be used, which was being manufactured in the United States at the time the foreign article was ordered.

(Catalog of Federal Domestic Assistance Program No. 11.105, Importation of Duty-Free Educational and Scientific Materials)

Frank W. Creel,

Acting Director, Statutory Import Programs Staff.

[FR Doc. 80-38389 Filed 12-10-80; 8:45 am]

BILLING CODE 3510-25-M

Trustees of the University of Pennsylvania; Decision on Application for Duty-Free Entry of Scientific Article

The following is a decision on an application for duty-free entry of a scientific article pursuant to Section 6(c) of the Educational, Scientific, and Cultural Materials Importation Act of 1966 (Public Law 89-651, 80 Stat. 897) and the regulations issued thereunder as amended (15 CFR 301).

A copy of the record pertaining to this decision is available for public review between 8:30 A.M. and 5:00 P.M. in Room 3109 of the Department of Commerce Building, 14th and Constitution Avenue, N.W., Washington, D.C. 20230.

Docket No. 80-00288. Applicant: Trustees of the University of Pennsylvania, Purchasing Department, 3451 Walnut Street/16, Philadelphia, PA 19104. Article: ESCALAB 5 Spectrometer. Manufacturer: VG Scientific Limited, United Kingdom. Intended use of article: The foreign article will be used for research on interfacial studies on metals to include:

(1) *Interfacial Cohesion (Fracture)*—to determine the effects of segregated elements on intercrystalline bonding, examine the details of the electronic structure bonding of the elements in the gram core region and identify what elements are at the interface and relative concentration.

(2) *Hydrogen Embrittlement*—to determine the equilibrium concentration of hydrogen at the interface, how it is bonded and how the II-metal bond effects the metal-metal bond by ultraviolet photoemission and inelastic electron scattering.

(3) *Free Surface Segregation*—to determine multi-component single crystals of Ni and Fe to study free surface segregation.

(4) *Mechanisms of Molecular Reactions at Interfaces* on (a) Solid-Vapor Interfacial Mass Transfer Reactions—to determine the surface bonding of these impurities and the effect the impurities have upon the bonding of CO_2 and N_2 by angle resolved photoelectron spectroscopy with both ultraviolet and X-ray excitation and (b) Solid-Vapor Interfacial Phase Formation—to study the effects of such variables at successive stages of CR-rich oxide growth in controlled environments by XPS.

(5) *Corrosion at Elevated Temperatures*—to determine a combination of spectroscopic techniques to analyze the chemisorption phenomena in SO_2—O_2—SO_3 environments on solid surfaces (Nickel, Ni_3S_2, NiO) at temperatures between 25 and 600° C to provide the basic information needed to interpret kinetic investigations of the simultaneous sulfidation oxidation of nickel and study the dynamics of these processes at pressures less than 10^{-1} ton.

(6) *Modification of Surface Reactivity by Ion Implantation*—to study and modify the chemical and electrochemical catalytic activity of metal electrode surfaces and the rate of oxidation of selected metal surfaces by chemical and electrochemical means by studying the effects of various implanted species, such as Ni, Pd, Ag, Pt, Cd, etc.

Application received by Commissioner of Customs: April 28, 1980.

Comments: No comments have been received with respect to this application.

Decision: Application approved. No instrument or apparatus of equivalent scientific value to the foreign article, for such purposes as this artcle is intended to be used, is being manufactured in the United States.

Reasons: The foreign article provides a spatial detector. The National Bureau of Standards advises in its memorandum dated October 14, 1980 that (1) the capability of the foreign article described above is pertinent to the applicant's intended purpose and (2) it knows of no domestic instrument or apparatus of equivalent scientific value to the foreign article for the applicant's intended use.

The Department of Commerce knows of no other instrument or apparatus of equivalent scientific value to the foreign article, for such purposes as this article is intended to be used, which is being manufactured in the United States.

(Catalog of Federal Domestic Assistance Program No. 11.105, Importation of Duty-Free Educational and Scientific Materials)

Frank Creel,

Acting Director, Statutory Import Programs Staff.

[FR Doc. 80-38391 Filed 12-10-80; 8:45 am]

BILLING CODE 3510-25-M

University of Chicago; Decision on Application for Duty-Free Entry of Scientific Article

The following is a decision on an application for duty-free entry of a scientific article pursuant to Section 6(c) of the Educational, Scientific, and Cultural Materials Importation Act of 1966 (Public Law 89-651, 80 Stat. 897) and the regulations issued thereunder as amended (15 CFR 301).

A copy of the record pertaining to this decision is available for public review between 8:30 A.M. and 5:00 P.M. in Room 3109 of the Department of Commerce Building, 14th and Constitution Avenue, N.W., Washington, D.C. 20230.

Docket No.: 80-00287. Applicant: University of Chicago, Argonne National Laboratory, 9700 S. Cass Avenue, Argonne, Illinois 60439. Article: Analyzing Switching Magnet Model 3461. Manufacturer: Auckland Nuclear Accessory Co., New Zealand. Intended use of article: The article is intended to be used as part of a High Voltage Electron Microscope (HVEM)—Tandem Accelerator Facility. This facility provides a unique combination of capabilities for advanced high-voltage electron microscopy, ion implantation/bombardment and ion-beam analysis. The article is used as part of the ion-beam transport system between a Tandem Accelerator and a High Voltage Electron Microscope. Application received by Commissioner of Customs: April 28, 1980.

Comments: No comments have been received with respect to this application. Decision: Application approved. No instrument or apparatus of equivalent scientific value to the foreign article, for such purposes as this article is intended to be used, is being manufactured in the United States. Reasons: The foreign article provides a mass times energy product of at least 475 atomic mass units times one million electron volts (amu·MEV) at 30° deflection and at least 220 amu·MEV at 45°. The National Bureau of Standards advises in its memorandum dated October 7, 1980 that (1) the capability of the foreign article described above is pertinent to the applicant's intended purpose and (2) it knows of no domestic instrument or apparatus of equivalent scientific value to the foreign article for the applicant's intended use.

The Department of Commerce knows of no other instrument or apparatus of equivalent scientific value to the foreign article, for such purposes as this article is intended to be used, which is being manufactured in the United States.

(Catalog of Federal Domestic Assistance Program No. 11.105, Importation of Duty-Free Educational and Scientific Materials)

Frank W. Creel,

Acting Director, Statutory Import Programs Staff.

[FR Doc. 80-38390 Filed 12-10-80; 8:45 am]

BILLING CODE 3510-25-M

Minority Business Development Agency

Financial Assistance Application Announcement

The Minority Business Development Agency announces that it is seeking applications under its program to operate one project for a 12 month period beginning March 1, 1981 in the States of New York, Maine, Massachusetts, New Hampshire, New Jersey, Rhode Island, Connecticut and Vermont. The Project will operate at a cost not to exceed $200,000. The Project I. D. Number is 02-10-80000-01.

Funding Instrument: It is anticipated that the funding instrument, as defined by the Federal Grant and Cooperative Agreements Act of 1977, will be a grant.

Program Description: The General Business Services Program of the Minority Business Development Agency (MBDA) provides technical assistance without charge to eligible minority business persons and minority-owned firms for the purpose of improving their stability by increasing their management and marketing capabilities. MBDA offers competitive grants to consulting firms (either "not for profit" or commercial entities). These firms must be capable of providing such services as complex financial analysis, specialized industrial and personnel management services and marketing planning plus a broad range of other in-depth business services, excluding legal services.

Eligibility Requirements: There are no restrictions. Any profit or non-profit institution is eligible to submit an application.

Application Materials: An application kit for this project may be requested by writing to the following address: U.S. Department of Commerce, Minority Business Development Agency, Grants Administration Unit, 26 Federal Plaza, Room No. 3707, New York, New York 10278.

In requesting an application kit, the applicant must specify its profit status; i.e., State or local government, Federally recognized Indian tribal units, educational institutions, or other type of profit or non-profit institution. This information is necessary to enable MBDA to include the appropriate cost principles in the application kit.

Award Process: All applications that are submitted in accordance with the instructions in the application kit will be submitted to a panel for review and ranking. Specific criteria by which applications will be evaluated is included in the application kit.

Closing Date: Applicants are encouraged to obtain an application kit as soon as possible in order to allow sufficient time to prepare and submit an application before the closing date of January 8, 1981.

Applications received after that date will not be considered. A pre-application conference will be held on Monday, December 22, 1980 at 10:00 AM at 26 Federal Plaza, Room #305B, New York City.

Detailed submission procedures are outlined in each application kit.

11.800 Minority Business Development (Catalog of Federal Domestic Assistance) (This program is not subject to the requirements of OMB Circular A-95).

Dated: December 3, 1980.

Carlton L. Eccles,

Regional Director.

[FR Doc. 80-38355 Filed 12-10-80; 8:45 am]

BILLING CODE 3510-21-M

Financial Assistance Application Announcement

AGENCY: Department of Commerce, Minority Business Development Agency.

ACTION: Notice.

SUMMARY: The Minority Business Development Agency (MBDA) announces that it is seeking applications under its General Business Services Program (GBS) to operate one project for a 12-month period beginning May 1, 1981 within the 12 Northern Ohio counties of: Cuyahoga, Geauga, Lake, Medina, Lorain, Erie, Fulton, Lucas, Ottawa, Sandusky, Portage and Summit. The project will operate at a cost not to exceed $389,000 and the Project I.D. Number is 05-60-00636-00.

Program Description: The General Business Services Program (GBS) of the Minority Business Development Agency (MBDA) provides technical assistance to minority business persons and firms for the purpose of improving their stability by increasing their management and marketing capabilities. MBDA offers competitive grants to consulting firms (either "not-for-profit" or commercial entities). These firms must be capable of providing such services as:

Preparation of business plans.
Financial packaging.
Industrial management assistance.
Personnel management services.
Marketing planning.

and a broad range of other business services excluding legal services.

Eligibility Requirements: Any for-profit firm or non-profit institution is eligible to submit an application. If an award is made, continuation awards for up to two additional years may be made to the successful recipient without competition, provided that funds have been appropriated for a project of this kind, and MBDA has determined that such funds are available, there is a continuing need for a project of this kind, and the recipient has performed satisfactorily.

Application Materials: An application kit for these projects may be requested by writing to the following address: U.S. Department of Commerce, Minority Business Development Agency Grants Administration Unit, 55 East Monroe Street—Suite 1440—Chicago, Illinois 60603. (Self-address mailing labels should be furnished with written request.)

Application Materials: In requesting an application kit, the applicant must specify its profit status; i.e., State or local government, Federally recognized Indian tribal unit, education institution, hospital or other type of profit or non-profit institution. This information is necessary to enable MBDA to include the appropriate cost principles in the application kit.

Award Process: All applications that are submitted in accordance with the instructions in the application kit will be submitted to a panel for review and ranking. Specific criteria by which applications will be evaluated is included in the application kit.

Closing Date: Applicants are encouraged to obtain an application kit as soon as possible in order to allow sufficient time to prepare and submit an application before the closing date of February 6, 1981. Applications received after February 6, 1981 will not be considered.

11.800 Minority Business Development (Catalog of Federal Domestic Assistance)

Dated: December 5, 1980.

Celso C. Moreno,

Acting Regional Director.

[FR Doc. 80-38437 Filed 12-10-80; 8:45 am]

BILLING CODE 3510-21-M

Financial Assistance Application Announcement

AGENCY: Department of Commerce, Minority Business Development Agency.

ACTION: Notice.

SUMMARY: The Minority Business Development Agency (MBDA) announces that it is seeking applications under its General Business Services Program (GBS) to operate one project for a 12 month period beginning April 1, 1981 within the Chicago Standard Metropolitan Statistical Area (SMSA) which includes the counties of Cook, Dupage, Kane, Lake, McHenry and Will. The project will operate at a cost not to exceed $784,000 and the Project I.D. Number is 05-60-00117-00.

Program Description: The General Business Services Program (GBS) of the Minority Business Development Agency (MBDA) provides technical assistance to minority business persons and firms for the purpose of improving their stability by increasing their management and marketing capabilities. MBDA offers competitive grants to consulting firms (either "not for profit" or commercial entities). These firms must be capable of providing such services as:

Preparation of business plants.
Financial packaging.
Industrial management assistance.
Personnel management services.
Marketing planning.

and a broad range of other business services excluding legal services.

Eligibility Requirements: Any for-profit firm or non-profit institution is eligible to submit an application. If an award is made, continuation awards for up to two additional years may be made to the successful recipient without competition, provided that funds have been appropriated for a project of this kind, and MBDA has determined that such funds are available, there is a continuing need for a project of this kind, and the recipient has performed satisfactorily.

Application Materials: An application kit for these projects may be requested in writing to the following address: U.S. Department of Commerce, Minority Business Development Agency, Grants Administration Unit, 55 East Monroe Street, Suite 1440, Chicago, Illinois 60603. Self-addressed mailing labels should be forwarded with written request. In requesting an application kit the applicant must specify its profit status; i.e., State or Local government, Federally recognized Indian tribal unit, educational institution, hospital, or other type of profit or non-profit institution. This information is necessary to enable MBDA to include the appropriate cost principles in the application kit.

Award Process: All applications that are submitted in accordance with the instructions in the application kit will be submitted to a panel for review and ranking. Specific criteria by which applications will be evaluated is included in the application kit.

Closing Date: Applicants are encouraged to obtain an application kit as soon as possible in order to allow sufficient time to prepare and submit an application before the closing date of February 6, 1981. Applications received after February 6, 1981 will not be considered.

11.800 Minority Business Development (Catalog of Federal Domestic Assistance)

Date: December 5, 1980.

Celso C. Moreno,

Acting Regional Director.

[FR Doc. 80-38438 Filed 12-10-80; 8:45 am]

BILLING CODE 3510-21-M

Financial Assistance Application Announcement

AGENCY: Department of Commerce, Minority Business Development Agency.

ACTION: Notice.

SUMMARY: The Minority Business Development Agency (MBDA) announces that it is seeking applications under its General Business Services Program (GBS) to operate one project for a 12 month period beginning May 1, 1981 within the 9 Minnesota counties of: Anoka, Carver, Chisago, Dakota, Hennepin, Ramsey, Scott, Washington and Wright counties and 2 Wisconsin counties of Minnesota and St. Croix County. The project will operate at a cost not to exceed $110,000 and the Project I.D. Number is 05-60-01057-00.

Program Description: The General Business Services Program (GBS) of the Minority Business Development Agency (MBDA) provides technical assistance to minority business persons and firms for the purpose of improving their stability by increasing their management and marketing capabilities. MBDA offers competitive grants to consulting firms (either "not-for-profit" or commercial entities). These firms must be capable of providing such services as:

Preparation of business plans.
Financial packaging.
Industrial management assistance.
Personnel management services.
Marketing planning.

and a broad range of other business services excluding legal services.

Eligibility Requirements: Any for-profit firm or non-profit institution is eligible to submit an application. If an award is made, continuation awards for up to two additional years may be made to the successful recipient without competition, provided that funds have been appropriated for a project of this kind, and MBDA has determined that such funds are available, there is a continuing need for a project of this kind, and the recipient has performed satisfactorily.

Application Materials: An application kit for these projects may be requested by writing to the following address: U.S. Department of Commerce, Minority Business Development Agency, Grants Administration Unit, 55 East Monroe Street—Suite 1440—Chicago, Illinois 60603. (Self-address mailing labels should be furnished with written request).

In requesting an application kit, the applicant must specify its profit status: I.E.; State or local government, Federally recognized Indian tribal unit, education institution, hospital or other type of profit or non-profit institution. This information is necessary to enable MBDA to include the appropriate cost principles in the application kit.

Award Process: All applications that are submitted in accordance with the instructions in the application kit will be submitted to a panel for review and ranking. Specific criteria by which applications will be evaluated is included in the application kit.

Closing Date: Applicants are encouraged to obtain an application kit as soon as possible in order to allow sufficient time to prepare and submit an application before the closing date of February 6, 1981. Applications received

after February 6, 1981 will not be considered.

11.800 Minority Business Development.

(Catalog of Federal Domestic Assistance)

Dated: December 5, 1980.

Celso C. Moreno,

Acting Regional Director.

[FR Doc. 80-38439 Filed 12-10-80; 8:45 am]

BILLING CODE 3510-21-M

Financial Assistance Application Announcement

AGENCY: Department of Commerce, Minority Business Development Agency.

ACTION: Notice.

SUMMARY: The Minority Business Development Agency (MBDA) announces that it is seeking applications under its General Business Services Program (GBS) to operate one project for a 12 month period beginning May 1, 1981 within the 10 Southern Ohio counties of Butler, Clermont, Hamilton, Warren, Montgomery, Delaware, Fairfield, Madison, Pickaway and Franklin; 3 Kentucky counties of Boone, Campbell and Kenton and Dearborn county in Indiana. The project will operate at a cost not to exceed $330,000 and the Project I.D. Number is 05-60-00817-00.

Program Description: The General Business Services Program (GBS) of the Minority Business Development Agency (MBDA) provides technical assistance to minority business persons and firms for the purpose of improving their stability by increasing their management and marketing capabilities. MBDA offers competitive grants to consulting firms (either "not for profit" or "commercial entities"). These firms must be capable of providing such services as:

Preparation of business plans
Financial packaging
Industrial management assistance
Personnel management services
Marketing planning

and a broad range of other business services excluding legal services.

Eligibility Requirements: Any for-profit firm or non-profit institution is eligible to submit an application. If an award is made, continuation awards for up to two additional years may be made to the successful recipient without competition, provided that funds have been appropriated for a project of this kind, and MBDA has determined that such funds are available, there is a continuing need for a project of this kind, and the recipient has performed satisfactorily.

Application Materials: An application kit for these projects may be requested in writing to the following address: U.S. Department of Commerce, Minority Business Development Agency, Grants Administration Unit, 55 East Monroe Street, Suite 1440, Chicago, Illinois 60603. Self-addressed mailing labels should be forwarded with written request. In requesting an application kit the applicant must specify its profit status; i.e., State or Local government, Federally recognized Indian tribal unit, educational institution, hospital, or other type of profit or non-profit institution. This information is necessary to enable MBDA to include the appropriate cost principles in the application kit.

Award Process: All applications that are submitted in accordance with the instructions in the application kit will be submitted to a panel for review and ranking. Specific criteria by which applications will be evaluated is included in the application kit.

Closing Date: Applicants are encouraged to obtain an application kit as soon as possible in order to allow sufficient time to prepare and submit an application before the closing date of February 6, 1981. Applications received after February 6, 1981 will not be considered.

11.800 Minority Business Development.

(Catalog of Federal Domestic Assistance)

Dated: December 5, 1980.

Celso C. Moreno,

Acting Regional Director.

[FR Doc. 80-38440 Filed 12-10-80; 8:45 am]

BILLING CODE 3510-21-M

Financial Assistance Application Announcement

AGENCY: Department of Commerce, Minority Business Development Agency.

ACTION: Notice.

SUMMARY: The Minority Business Development Agency (MBDA) announces that it is seeking applications under its General Business Services Program (GBS) to operate one project for a 12 month period beginning May 1, 1981 within the Nebraska counties of Douglas, Sarpy, Pottawattamie and Lancaster; and Iowa counties of Dakota and Woodbury. Project will operate at a cost not to exceed $110,000 and the Project I.D. Number is 07-10-01368-00.

Program Description: The General Business Services Program (GBS) of the Minority Business Development Agency (MBDA) provides technical assistance to minority business persons and firms for the purpose of improving their stability by increasing their management and marketing capabilities. MBDA offers competitive grants to consulting firms (either "not for profit or" commercial entities). These firms must be capable of providing such services as:

—Preparation of business plans
—Financial packaging
—Industrial management assistance
—Personnel management services
—Marketing planning

and a broad range of other business services excluding legal services.

Eligibility Requirements: Any for-profit firm or non-profit institution is eligible to submit an application. If an award is made, continuation awards for up to two additional years may be made to the successful recipient without competition, provided that funds have been appropriated for a project of this kind, and MBDA has determined that such funds are available, there is a continuing need for a project of this kind, and the recipient has performed satisfactorily.

Application Materials: An application kit for these projects may be requested in writing to the following address: U.S. Department of Commerce, Minority Business Development Agency, Grants Administration Unit, 55 East Monroe Street, Suite 1440, Chicago, Illinois 60603. Self-addressed mailing labels should be forwarded with written request. In requesting an application kit the applicant must specify its profit status; i.e., State or local government, Federally recognized Indian tribal unit, educational institution, hospital, or other type of profit or non-profit institution. This information is necessary to enable MBDA to include the appropriate cost principles in the application kit.

Award Process: All applications that are submitted in accordance with the instructions in the application kit will be submitted to a panel for review and ranking. Specific criteria by which applications will be evaluated is included in the application kit.

Closing Date: Applicants are encouraged to obtain an application kit as soon as possible in order to allow sufficient time to prepare and submit an application before the closing date of February 6, 1981. Applications received after February 6, 1981 will not be considered.

11.800 Minority Business Development.

(Catalog of FEderal Domestic Assistance)

Dated: December 5, 1980.

Celso C. Moreno,

Acting Regional Director.

[FR Doc. 80-38441 Filed 12-10-80; 8:45 am]

BILLING CODE 3510-21-M

National Oceanic and Atmospheric Administration

Receipt of Application for Marine Mammal Permit; Canada's Wonderland Ltd.

Notice is hereby given that an applicant has applied in due form for a Permit to take marine mammals as authorized by the Marine Mammal Protection Act of 1972 (16 U.S.C. 1361–1407), and the Regulations Governing the Taking and Importing of Marine Mammals (50 CFR Part 216).

1. Applicant:
a. Name Canada's Wonderland Ltd. (P264)
b. Address 9580 Jane Street, P.O. Box 624, Maple, Ontario LOJ 1EO.
2. Type of Permit Public Display.
3. Name and Number of Animals:
Atlantic bottlenose dolphin (Tursiops truncatus)—6.
California sea lion (Zalophus californianus)—5.
4. Type of Take:
To capture for public display.
5. Location of Activity: Gulf of Mexico, and Channel Islands.
6. Period of Activity: 2 years.

The arrangements and facilities for transporting and maintaining the marine mammals requested in the above described application have been inspected by a licensed veterinarian, who has certifed that such arrangements and facilities are adequate to provide for the well-being of the marine mammals involved.

Concurrent with the publication of this notice in the Federal Register the Secretary of Commerce is forwarding copies of this application to the Marine Mammal Commission and the Committee of Scientific Advisors.

Written data or views, or requests for a public hearing on this application should be submitted to the Assistant Administrator for Fisheries, National Marine Fisheries Service, Department of Commerce, Washington, D.C. 20235, on or before January 12, 1981. Those individuals requesting a hearing should set forth the specific reasons why a hearing on this particular application would be appropriate. The holding of such hearing is at the discretion of the Assistant Administrator for Fisheries.

All statements and opinions contained in this application are summaries of those of the Applicant and do not necessarily reflect the views of the national Marine Fisheries Service.

As a request for a permit to take living marine mammals to be maintained in areas outside the jurisdiction of the United States, this application has been submitted in accordance with National Marine Fisheries Service policy concerning such applications (40 FR 11619, March 12, 1975). In this regard, no application will be considered unless:

(a) it is submitted to the Assistant Administrator for Fisheries, National Marine Fisheries Service, through the appropriate agency of the foreign government;
(b) it includes:
i. a certification from such appropriate government agency verifying the information set forth in the application;
ii. a certification from such government agency that the laws and regulations of the government involved permit enforcement of the terms of the conditions of the permit, and that the government will enforce such terms;
iii, a statement that the government concerned will afford comity to a National Marine Fisheries Service decision to amend, suspend or revoke a permit.

In accordance with the above cited policy, the certification and statements of the Ministry of Agriculture and Food have been found appropriate and sufficient to allow consideration of this permit application.

Documents submitted in connection with the above application are available for review in the following offices:

Assistant Administrator for Fisheries, National Marine Fisheries service, 3300 Whitehaven Street, N.W., Washington, D.C.; Regional Director, National Marine Fisheries Service, Southeast Region, 9450 Koger Boulevard, St. Petersburg, Florida 33702; and Regional Director, National Marine Fisheries Service, Southwest Region, 300 South Ferry Street, Terminal Island, California 90731.

Dated: December 3, 1980.

Richard B. Roe,

Acting Director, Office of Marine Mammals and Endangered Species, National Marine Fisheries Service.

[FR Doc. 80-38446 Filed 12-10-80; 8:45 am]
BILLING CODE 3510-22-M

Receipt of Application for Marine Mammal Permit; Marine Animal Productions

Notice is hereby given that an Applicant has applied in due form for a Permit to take marine mammals as authorized by the Marine Mammal Protection Act of 1972 (16 U.S.C. 1361–1407), and the Regulations Governing the Taking and Importing of Marine Mammals (50 CFR Part 216).

1. Applicant:
a. Name: Marine Animal Productions (P108F).
b. Address: 150 Debuys Road, Biloxi, Mississippi 39521.
2. Type of Permit: Public Display.
3. Name and Number of Animals:
Atlantic bottlenose dolphins (*Tursiops truncatus*)—6.
California sea lions (*Zalophus californianus*)—5.
4. Type of Take:
To capture dolphins and obtain beached/stranded sea lions to fulfill contract obligations at Canada's Wonderland Ltd. and to export and reimport marine mammals seasonally.
5. Location of Activity: dolphins-Gulf of Mexico, sea lions-California.
6. Period of Activity: 2 years.

The arrangements and facilities for transporting and maintaining the marine mammals requested in the above described application have been inspected by a licensed veterinarian, who has certified that such arrangements and facilities are adequate to provide for the well-being of the marine mammals involved.

Concurrent with the publication of this notice in the Federal Register the Secretary of Commerce is forwarding copies of this application to the Marine Mammal Commission and the Committee of Scientific Advisors.

Written data or views, or requests for a public hearing on this application should be submitted to the Assistant Administrator for Fisheries, National Marine Fisheries Service, Department of Commerce, Washington, D.C. 20235, on or before January 12, 1981. Those individuals requesting a hearing should set forth the specific reasons why a hearing on this particular application would be appropriate. The holding of such hearing is at the discretion of the Assistant Administrator for Fisheries.

All statements and opinions contained in this application are summaries of those of the Applicant and do not necessarily reflect the views of the National Marine Fisheries Service.

Documents submitted in connection with the above application are available for review in the following offices:

Assistant Administrator for Fisheries, National Marine Fisheries Service, 3300 Whitehaven Street, N.W., Washington, D.C.;

Regional Director, National Marine Fisheries Service, Southeast Region, 9450 Koger Boulevard, Duval Building, St. Petersburg, Florida 33702; and Regional Director, Natinal Marine Fisheries Service, Southwest Region, 300 South Ferry Street, Terminal Island, California 90731.

Dated: December 3, 1980.

Richard B. Roe,

Acting Director, Office of Marine Mammals and Endangered Species, National Marine Fisheries Service.

[FR Doc. 80-38447 Filed 12-10-80; 8:45 am]
BILLING CODE 3510-22-M

COMMITTEE FOR THE IMPLEMENTATION OF TEXITLE AGREEMENTS

Announcing Import Restraint Levels for Certain Cotton, Wool and Man-Made Fiber Textile Products From Macau, Effective on January 1, 1981

December 8, 1980.

AGENCY: Committee for the Implementation of Textile Agreements.

ACTION: Establishing import restraint levels for certain cotton, wool and man-made fiber textile products imported from Macau, effective on January 1, 1981.

SUMMARY: The Bilateral Cotton, Wool and Man-Made Fiber Textile Agreement of November 29 and December 18, 1979, between the Governments of the United States and Portugal establishes specific ceilings for cotton, wool and man-made fiber textile products from Macau in Categories 333/334/335 (suit-type and other cotton coats), 338 (men's and boys' knit shirts), 339 (women's, girls' and infants' knit shirts and blouses), 340 (men's and boys' woven cotton shirts), 341 (women's, girls' and infants' woven cotton blouses), 347/348 (cotton trousers), and 445/446 (wool sweaters), during the agreement year which begins on January 1, 1981, and extends through December 31, 1981. The agreement also provides consultation levels for certain categories, such as Categories 337 (cotton playsuits), and 659 (other wearing apparel of man-made fibers), which are not subject to specitic ceilings and which may be increased upon agreement betweeen the two governments. In the letter published below the Chariman of the Committee for the Implementation of Textile Agreements directs the Commissioner of Customs, in accordance with the terms of the bilateral agreement, to prohibit entry into the United States for consumption, or withdrawal form warehouse for consumption, of textile products in the foregoing categories, produced or manufactured in Macau and exported during the twelve-month period which begins on January 1, 1981, and extends through December 31, 1981, in excess of the designated levels of restraint. the levels of restraint for Categories 333/334/335, 338, 339, 340, 347/348 and 445/446 have been reduced to account for carryforward used in 1980.

(A detailed description of the textile categories in terms of T.S.U.S.A. numbers was published in the Federal Register on February 28, 1980 (45 FR 13172), as amended on April 23, 1980 (45 FR 27463) and August 12, 1980 (45 FR 53506)).

This letter and the actions taken pursuant to it are not designed to implement all of the provisions of the bilateral agreement, but are designed to assist only in the implementation of certain of its provisions.

EFFECTIVE DATE: January 1, 1981.

FOR FURTHER INFORMATION CONTACT: Ronald Sorini, International Trade Specialist, U.S. Department of Commerce, Office of Textiles and Apparel, Washington, D.C. 20230 (202/366-4212).

Arthur Garel,

Acting Chairman, Committee for the Implementation of Textile Agreements.

December 8, 1980.

Committee for the Implementation of Textile Agreements

Commissioner of Customs,
Department of the Treasury,
Washington, D.C.

Dear Mr. Commissioner: Under the terms of the Arrangement Regarding International Trade in Textiles done at Geneva on December 20, 1973, as extended on December 15, 1977; pursuant to the Bilateral Cotton, Wool and Man-made-Fiber Textile Agreement of November 29 and December 18, 1979, between the Governments of the United States and Portugal; and in accordance with the provisions of Executive Order 11651 of March 3, 1972, as amended by Executive Order 11951 of January 6, 1977, you are directed to prohibit, effective on January 1, 1981, and for the twelve-month period extending through December 31, 1981, entry into the United States for consumption and withdrawal from warehouse for consumption of cotton, wool and man-made fiber textile products in the following categories, produced or manufactured in Macau, in excess of the indicated levels of restraint:

Category	12-month level of restraint
333/334/335	(1)
337 (dozen)	28,000
338 (dozen)	115,042
339 (dozen)	489,475
340 (dozen)	110,275
341 (dozen)	75,382
347/348 (dozen)	262,655
445/446 (dozen)	64,518
659 (pounds)	203,724

[1] 87,686 dozen of which not more than 47,813 dozen shall be in Cat. 333/335.

In carrying out this directive entries of textile products in the foregoing categories, which have been exported to the United States prior to January 1, 1981, shall to the extent of any unfilled balances, be charged against the levels of restraint established for such goods during the twelve-month period beginning on January 1, 1980, and extending through December 31, 1980. In the event that the levels of restraint established for that period have been exhausted by previous entries, such goods shall be subject to the levels set forth in this letter.

The levels of restraint set forth above are subject to adjustment in the future pursuant to the provisions of the bilateral agreement of November 29 and December 18, 1979, which provide, in part, that: (1) within the aggregate and applicable group limits, specific levels of restraint may be exceeded by designated percentages; (2) these same level may be increased for carryover and carry-forward up to 11 percent of the applicable category limit; (3) administrative arrangements or adjustments may be made to resolve minor problems arising in the implementation of the agreement. Any appropriate adjustments under the provisions of the bilateral agreement referred to above will be made to you by letter.

A detailed description of the textile categories in terms of T.S.U.S.A. numbers was published in the Federal Register on February 28, 1980, (45 FR 13172), as amended on April 23, 1980 (45 FR 27463), and August 12, 1980 (45 FR 53506).

In carrying out the above directions, the Commissioner of Customs should construe entry into the United States for consumption to include entry for comsumption into the Commonwealth of Puerto Rico.

The actions taken with respect to the Government of Portugal and with respect to imports of cotton, wool and man-made fiber textile products from Macau have been determined by the Committee for the Implementation of Textile Agreements to involve foreign affairs functions of the United States. Therefore, these directions to the Commissioner of Customs, which are necessary for the implementation of such actions, fall within the foreign affairs exception to the rule-making provisions of 5 U.S.C. 553. This letter will be published in the Federal Register.

Sincerely,

Arthur Garel,

Acting Chairman, Committee for the Implementation of Textile Agreements.

[FR Doc. 80-38471 Filed 12-10-80; 8:45 am]

BILLING CODE 3510-25-M

COMMODITY FUTURES TRADING COMMISSION

Proposed Futures Contracts; Publication of and Request for Comment on Proposed Rules Having Major Economic Significance; Terms and Conditions of the Standard and Poor's 500 Stock Price Index Futures Contract of the Chicago Mercantile Exchange; Correction

On Tuesday, December 2, 1980 (45 FR 79866) the Commodity Futures Trading commission published the terms and conditions of the Standard and Poor's 500 Stock Price Index Futures Contract of the Chicago Mercantile Exchange requesting comments by January 2, 1981. The comment date is corrected to be 60 days from date of publication and should be February 2, 1981.

Issued in Washington, D.C. on December 5, 1980.

Jean A. Webb,

Deputy Secretary of the Commission.

[FR Doc. 80-38346 Filed 12-10-80; 8:45 am]

BILLING CODE 6351-01-M

DEPARTMENT OF DEFENSE

Office of the Secretary

Per Diem, Travel and Transportation Allowance; Changes in Per Diem Rates

AGENCY: Per Diem, Travel and Transportation Allowance Committee, DoD.

ACTION: Publication of changes in per diem rates.

SUMMARY: The Per Diem, Travel and Transportation Allowance Committee is publishing Civilian Personnel Per Diem Bulletin Number 98. This bulletin lists changes in per diem rates prescribed for U.S. Government employees for official travel in Alaska, Hawaii, Puerto Rico and possessions of the United States. Bulletin Number 98 is being published in the Federal Register to assure that travelers are paid per diem at the most current rates.

EFFECTIVE DATE: November 1, 1980.

FOR FURTHER INFORMATION CONTACT: Mr. Frederick W. Weiser, 325-9330.

SUPPLEMENTARY INFORMATION: This document gives notice of changes in per diem rates prescribed by the Per Diem, Travel and Transportation Allowance Committee for non-foreign areas outside the continental United States. Distribution of Civilian Per Diem Bulletins by mail was discontinued effective June 1, 1979. Per Diem Bulletins published periodically in the Federal Register now constitute the only notification of changes in per diem rates to agencies and establishments outside the Department of Defense.

The text of the Bulletin follows:

Civilian Personnel Per Diem Bulletin No. 98

To the Heads of Executive Departments and Establishments

Subject: Table of maximum per diem rates in lieu of subsistence for United States Government civilian officers and employees for official travel in Alaska, Hawaii, the Commonwealth of Puerto Rico and possessions of the United States.

1. This bulletin is issued in accordance with Memorandum for Heads of Executive Departments and Establishments from the Deputy Secretary of Defense August 17, 1966, "Executive Order 11294, August 4, 1966 Delegating Certain Authority of the President to Establish Maximum Per Diem Rates for Government Civilian Personnel in Travel Status," in which this Committee is directed to exercise the authority of the President (5 U.S.C. 5702(a)(2)) delegated to the Secretary of Defense for Alaska, Hawaii, the Commonwealth of Puerto Rico, the Canal Zone, and possessions of the United States. When appropriate and in accordance with regulations issued by competent authority, lesser rates may be prescribed.

2. The maximum per diem rates shown in the following table are continued from the preceding Bulletin Number 97 except in the case identified by an asterisk which rate is effective November 1, 1980. The date of this Bulletin shall be the date the last signature is affixed hereto.

3. Each Department or Establishment subject to these rates shall take appropriate action to disseminate the contents of this Bulletin to the appropriate headquarters and field agencies affected thereby.

4. The maximum per diem rates referred to in this Bulletin are:

Locality	Maximum rate
Alaska:	
Adak [1]	$12.60
Anaktuvuk Pass	140.00
Anchorage	72.00
Barrow	111.00
Bethel	93.00
College	67.00
Cordova	84.00
Deadhorse	94.00
Dillingham	83.00
Dutch Harbor	82.00
Eielson AFB	67.00
Elmendorf AFB	72.00
Fairbanks	67.00
Ft. Richardson	72.00
Ft. Wainwright	67.00
Juneau	83.00
Kodiak	84.00
Kotzebue	91.00
Murphy Dome	67.00
Noatak	91.00
Nome	90.00
Noorvik	91.00
Prudhoe Bay	94.00
Shemya AFB [1]	11.00
Shungnak	91.00
Spruce Cape	84.00
Tanana	90.00
Valdez	70.00
Wainwright	79.00
All Other Localities	71.00
American Samoa	65.00
Guam M.I.	60.00
Hawaii:	
Oahu	70.00
All Other Localities	60.00
Johnston Atoll [2]	15.50
Midway Islands [1]	12.60
Puerto Rico:	
Bayamon:	
12-16—5-15	102.00
5-16—12-15	75.00
Carolina:	
12-16—5-15	102.00
5-16—12-15	75.00
Fajardo:	
12-16—5-15	102.00
5-16—12-15	75.00
Ft. Buchanan: [3]	
12-16—5-15	102.00
5-16—12-15	75.00
Ponce [2]	68.00
Roosevelt Roads:	
12-16—5-15	102.00
5-16—12-15	75.00
Sabana Seca:	
12-16—5-15	102.00
5-16—12-15	75.00
San Juan: [5]	
12-16—5-15	102.00
5-16—12-15	75.00
All Other Localities	63.00
Virgin Islands of U.S.:	
12-1—4-30	89.00
5-1—11-30	65.00
Wake Island [1]	15.00
Other Localities	[6] 20.00

[1] Commercial facilities are not available. This per diem rate covers charges for meals in available facilities plus an additional allowance for incidental expenses and will be increased by the amount paid for Government quarters by the traveler.

[2] Commercial facilities are not available. Only Government-owned and contractor operated quarters and mess are available at this locality. This per diem rate is the amount necessary to defray the cost of lodging, meal and incidental expenses.

[3] Including GSA Service Center, Guaynabo.

[4] Including Fort Allen NCS.

[5] Including San Juan Coast Guard Units.

[6] Effective November 1, 1980.

M. S. Healy,

OSD Federal Register Liaison Officer, Washington Headquarters Services, Department of Defense.

December 8, 1980.

[FR Doc. 80-38413 Filed 12-10-80; 8:45 am]

BILLING CODE 3810-70-M

DELAWARE RIVER BASIN COMMISSION

Public Hearing

Notice is hereby given that the Delaware River Basin Commission will hold a public hearing on Tuesday, December 16, 1980, commencing at 2 p.m. The hearing will be a part of the Commission's regular December business meeting which is open to the public. Both the hearing and the meeting will be held in the Hall of Flags, Sheraton Hotel, 17th Street and Kennedy Boulevard, Philadelphia, Pennsylvania. The subject of the hearing will be application for approval of the following projects as amendments to the Comprehensive Plan pursuant to Article 11 of the Compact and/or project approvals pursuant to Section 3.8 of the Compact.

1. *Lambertville Sewerage Authority (D 69-150 CP).* Expansion of the Authority's existing sewage treatment plant in the City of Lambertville, Hunterdon County, N.J. A new pumping station and modifications to existing treatment facilities will be undertaken to accommodate an increase in sewage flow to 1.5 million gallons per day by the year 2000. The project will provide for removal of 90% BOD and 93% of suspended solids. Treated effluent will discharge to the Delaware River.

2. *Camden County Municipal Utilities Authority (D 71-9 CP Revised).* Revision of the Authority's wastewater management plant covering the region of Camden County, New Jersey, lying within the Delaware River drainage area. Treatment plant, Delaware No. 1, is designed to treat 60 million gallons

per day, and treatment plant, Delaware No. 2, is designed to treat 14 million gallons per day. Both plants will discharge to the Delaware River after removal of 90% of BOD. A system of regional interceptors, pumping stations, force mains and associated facilities are also included in the project, and will be undertaken in stages over the next three years.

3. *Maple Shade Township (D 78-37 CP).* Modifications at two existing sewage treatment plants in Maple Shade, Burlington County, N.J. Treatment levels will be upgraded at both plants to provide for removal of 90% BOD and suspended solids. About 1.32 million gallons per day of treated effluent will discharge from Plant No. 1 into the South Branch Pennsauken Creek. About 1 million gallons per day of treated effluent will be discharged from Plant No. 2 into the North Branch Pennsauken Creek.

4. *Uwchlan Township (D 80-42 CP).* A well water supply project to augment public water supplies in Uwchlan, West Whiteland, Caln and adjacent townships in Chester County, Pa. Designated as Wells Nos. 5 and 6, the two facilities are expected to provide a combined yield of about 760,000 gallons per day.

5. *Township of Medford (D 80-49 CP).* A well water supply project to augment public water supplies in Medford Township, Burlington County, N.J. Designated as Well No. 6, the new facility would be limited to a maximum withdrawal of 800,000 gallons per day.

6. *Rocco Infante, Jr. (D 80-53).* A surface water withdrawal to serve the subject farm in Upper Freehold Township, Monmouth County, N.J. A maximum of 20 million gallons per month would be withdrawn from an unnamed tributary of Doctors Creek and used for irrigation of 100 acres of farm crops.

7. *Ellis F. Herbert (D 80-54).* A surface water withdrawal at the subject farm in Upper Freehold Township, Monmouth County, N.J. A maximum of 6 million gallons per month would be withdrawn from an unnamed tributary of Assunpink Creek and used for irrigation of 30 acres of farm crops.

8. *Joseph Klein and Son (D 80-55).* A surface water withdrawal at the subject farm in Upper Freehold Township, Monmouth County, N.J. A maximum of 30 million gallons per month would be withdrawn from Doctors Creek and used for the irrigation of 150 acres of crops.

9. *F. G. Rue and Sons (D 80-59).* A surface water withdrawal at the subject farm in Upper Freehold Township, Monmouth County, N.J. A maximum of 40 million gallons a month would be withdrawn from a Doctors Creek tributary for the irrigation of 200 acres of crops.

10. *Charles J. Heuther (D 80-69).* A sewage treatment project to serve the Pine Brook Development in the Township of West Brunswick, Schuylkill County, Pennsylvania. The facility will provide 87.5% removal of BOD from a wastewater flow of about 100,000 gallons per day. Treated effluent will discharge to Pine Creek, a tributary of the Schuylkill River.

11. *UGI Corporation (D 80-77).* A 12-inch natural gas pipeline project in Cumru Township, Berks County, Pennsylvania, to augment supplies to the Reading area. It will cross beneath a section of the Schuylkill River, approximately 400 feet downstream of the Route 422 bridge, which has been designated recreational under the Pennsylvania Scenic Rivers Act.

Documents relating to the above-listed projects may be examined at the Commission's offices. Persons wishing to testify at this hearing are requested to register with the Secretary prior to the date of the hearing.

W. Brinton Whitall,

Secretary.

December 3, 1980.

FR Doc. 80-38465 Filed 12-10-80; 8:45 am]
BILLING CODE 6360-01-M

DEPARTMENT OF EDUCATION

National Advisory Council on Indian Education; Meeting

AGENCY: National Advisory Council on Indian Education.

ACTION: Notice of Meeting.

SUMMARY: This notice sets forth the schedule and proposed agenda of a forthcoming meeting of the National Advisory Council on Indian Education. This notice also describes the functions of the Council. Notice of the meeting is required under Section 10(a)(2) of the Federal Advisory Committee Act. This document is intended to notify the general public of their opportunity to attend.

DATES: Full Council Meeting: January 9, 1981, 9:00 a.m. to 5:00 p.m. and, January 10, 1981, 9:00 a.m. to 5:00 p.m. and, January 11, 1981, 9:00 a.m. to 5:00 p.m.

ADDRESS: National Advisory Council on Indian Education, 425 13th Street, N.W., Suite 326, Washington, D.C. 20004.

FOR FURTHER INFORMATION CONTACT: Dr. Michael P. Doss, Executive Director, National Advisory Council on Indian Education, 425 13th Street, N.W., Suite 326, Washington, D.C. 20004 202/376-8882.

SUPPLEMENTARY INFORMATION: The National Advisory Council on Indian Education is established under Section 442 of the Indian Education Act, Title IV of Pub. L. 92-318, (20 U.S.C., 1221g). The Council is established to:

(1) submit to the Secretary of Education a list of nominees for the position of Deputy Assistant Secretary for the Office of Indian Education;

(2) advise the Secretary of Education with respect to the administration (including the development of regulations and of administrative practices and policies) of any program in which Indian Children or adults participate from which they can benefit, including Title III of the Act of September 30, 1950 (Pub. L. 81-874) and Section 810, Title VIII of the Elementary and Secretary Education Act of 1965 (as added by Title IV of Pub. L. 92-318 and amended by Pub. L. 93-380), and with respect to adequate funding thereof;

(3) review applications for assistance under Title III of the Act of September 30, 1950 (Pub. L. 81-874), Section 810 of Title VIII of the Elementary and Secondary Education Act of 1965 as amended and Section 314 of the Adult Education Act (as added by Title IV of Pub. L. 92-318), and make recommendations to the Secretary with respect to their approval;

(4) evaluate programs and projects carried out under any program of the Department of Education in which Indian children or adults can participate or from which they can benefit, and disseminate and results of such evaluations;

(5) provide technical assistance to local educational agencies and to Indian educational agencies, institutions, and organizations to assist them in improving the education of Indian children;

(6) assist the Secretary of Education in developing criteria and regulations for the administration and evaluation of grants made under Section 303(b) of the Act of September 30, 1950 (Pub. L. 81-874) as added by Title IV, Part A, of Pub. L. 92-318;

(7) submit to the Congress not later than June 30 of each year a report of its activities, which shall include any recommendation it may deem necessary for the improvement of Federal education programs in which Indian children and adults participate, or from which they can benefit, which report shall include a statement of the Council's recommendations to the Secretary with respect to the funding of any such programs; and,

(8) be consulted by the Secretary of Education regarding the definition of term "Indian," as follows:

Sec. 453 [Title IV, Pub. L. 92-318]. For the purpose of this title, the term "Indian" means any individual who (1) is a member of a tribe, band, or other organized group of Indians, including those tribes, bands, or groups terminated since 1940 and those recognized now or in the future by the State in which they reside, or who is a descendant, in the first or second degree, of any such member, or (2) is considered by the Secretary of the Interior to be an Indian for any purpose, or (3) is an Eskimo or aleut or other Alaska Native, or (4) is determined to be an Indian under regulations promulgated by the Secretary, after consultation with the National Advisory Council on Indian Education which regulations shall further define the term "Indian."

The meeting will be open to the public. This meeting will be held at the office of the National Advisory Council on Indian Education, 425 13th Street, N.W., Suite 326, Washington, D.C. 20004, (202) 376-8882.

The proposed agenda includes:

(1) Executive Director's Report
(2) Action on previous meeting minutes
(3) Committee discussions and reports
(4) Review of NACIE FY 1981 Budget
(5) Plans for future NACIE activities
(6) Regular Council Business
(7) Public Testimony

Records shall be kept of all Council proceedings and shall be available for public inspection at the office of the National Advisory Council on Indian Education located at 425 13th Street, N.W., Suite 326, Washington, D.C., 20004.

Dated: December 8, 1980.

Signed at Washington, D.C.

Dr. Michael P. Doss,

Executive Director, National Advisory Council on Indian Education.

[FR Doc. 80-38393 Filed 12-10-80; 8:45 am]
BILLING CODE 4000-01-M

Office of Educational Research and Improvement

National Diffusion Network Program

AGENCY: Department of Education.

ACTION: Extension of closing date for transmittal of applications for new developer demonstrators for fiscal year 1981.

SUMMARY: The December 1, 1980, closing date for transmittal of applications for New Developer Demonstrators under the National Diffusion Network Program is extended. The *new closing date is January 5, 1981.*

SUPPLEMENTARY INFORMATION: Applications are invited for New Developer Demonstrator Projects under the National Diffusion Network Program. The extension of this deadline is intended to give potential applicants an opportunity to obtain a final decision by the Joint Dissemination Review Panel (JDRP) regarding whether to approve the applicant's program as an exemplary educational program. Since JDRP approval is one criterion which determines eligibility, and involves a scheduling problem over which prospective applicants have no control, the Program has determined that this additional time is in the best interest of the applicants and the Program.

Applications for New Developer Demonstrator Projects which were transmitted in time to meet the December 1, 1980, closing date and met eligibility requirements need not be resubmitted. However, if any applicant desires to modify such application, a resubmission with revised material will need to be transmitted in time to meet the new closing date.

Authority for this program is contained in Sections 303 and 376 of the Elementary and Secondary Education Act of 1965, as amended by P.L. 95-561 Education Amendments of 1978. (20 U.S.C. 2943, 3041)

This program issues awards to public or nonprofit private agencies, organizations, and institutions.

The purpose of the awards is to promote widespread installation across the nation of rigorously evaluated, exemplary educational programs.

Closing date for transmittal of applications: An application for a new grant must be mailed or hand delivered by January 5, 1981.

Applications delivered by mail: An application sent by mail must be addressed to the U.S. Department of Education, Application Control Center, Attention: 84.073A for New Developer Demonstrators; Washington, D.C. 20202.

An applicant must show proof of mailing consisting of one of the following:

(1) A legibly dated U.S. Postal Service postmark.

(2) A legible mail receipt with the date of mailing stamped by the U.S. Postal Service.

(3) A dated shipping label, invoice, or receipt from a commercial carrier.

(4) Any other proof of mailing acceptable to the U.S. Secretary of Education.

If an application is sent through the U.S. Postal Service, the Secretary does not accept either of the following as proof of mailing: (1) a private metered postmark, or (2) a mail receipt that is not dated by the U.S. Postal Service.

An applicant should note that the U.S. Postal Service does not uniformly provide a dated postmark. Before relying on this method an applicant should check with its local post office.

An applicant is encouraged to use registered or at least first class mail. Each late applicant for a new award will be notified that its application will not be considered.

Applications delivered by hand: An application that is hand delivered must be taken to the U.S. Department of Education, Application Control Center, Room 5673, Regional Office Building 3, 7th and D Streets, S.W., Washington, D.C.

The Application Control Center will accept a hand-delivered application between 8:00 a.m. and 4:30 p.m. (Washington, D.C. time) daily, except Saturdays, Sundays, and Federal holidays.

An application for a new award that is hand delivered will not be accepted after 4:30 p.m. on the closing date.

Program information: It is expected that new awards will be for a period not to exceed four years contingent on performance and availability of funds.

Applications for New Developer Demonstrator Awards will be accepted for projects in the following content areas: Adult Education, Bilingual, Migrant, Career Education, Vocational Education, Science, Social Studies, Organizational Arrangements, Administration, Presevice and Inservice Training, Secondary Reading and Language Arts, Mathematics, Special Education, Arts, Communications, Technology Applications, Gifted and Talented, Health, Human Behavior, and Physical Education. All applicants *must* have Joint Dissemination Review Panel approval.

Available funds: It is expected that approximately $13,200,000 will be available for the National Diffusion Network Program in FY 1981.

It is estimated that these funds could support: *84.073A:* New Developer Demonstrators—10 projects averaging $60,000; *84.073B:* Continuing Demonstrators—114 projects averaging $60,000; *84.073C:* New Facilitators—2 projects averaging $100,000; D: Continuing Facilitators—53 projects averaging $100,000. However, these estimates do not bind the U.S. Department of Education to a specific number of grants or to the amount of any grant unless that amount is otherwise specified by statute or regulations.

Application forms: Application forms and program information packages may be obtained by writing to the Division of Educational Replication, U.S. Department of Education (Room B-448, Trans Point Building), 400 Maryland Avenue, S.W., Washington, D.C. 20202.

Applications must be prepared and submitted in accordance with the regulations, instructions, and forms included in the program information package. The Secretary strongly urges that the narrative portion of the application not exceed 50 pages in length. The Secretary further urges that applicants not submit information that is not requested.

Applicable regulations: Regulations applicable to this program include the following:

(a) Regulations governing the National Diffusion Network Program (34 CFR Part 796) published on April 21, 1980 at 45 FR 26914 et seq.

(b) The Education Division General Administration Regulations (EDGAR) (34 CFR Parts 75 and 77) published on April 3, 1980 at 45 FR 22494.

FOR FURTHER INFORMATION CONTRACT: For further information contact Mr. Robert M. Mulligan, Division of Educational Replication, National Diffusion Network Program, U.S. Department of Education (Room B-448, Trans Point Building), 400 Maryland Avenue, S.W., Washington, D.C. 20202, Telephone (202) 245-2243.

(20 U.S.C. 2943, 3041)

(Catalog of Federal Domestic Assistance Program No. 84.073, National Diffusion Network Program)

Dated: December 8, 1980.

F. James Rutherford,

Assistant Secretary for Educational Research and Improvement.

[FR Doc. 80-38468 Filed 12-10-80; 8:45 am]

BILLING CODE 4000-01-M,

DEPARTMENT OF ENERGY

Compliance With the National Environmental Policy Act; Finding of No Significant Impact

AGENCY: Department of Energy.

ACTION: Notice of finding of no significant impact (FONSI).

SUMMARY: The Department of Energy (DOE) has prepared an environmental assessment (EA) on the issuance of a prohibition order under the provisions of the Energy Supply and Environmental Coordination Act of 1974 (ESECA) to Martin Marietta Corporation, owner and operator of a cement manufacturing facility located in Atlanta, Georgia. This order, when made effective, will prevent Martin Marietta from burning natural gas or petroleum products as its primary energy source in kilns No. 1 and No. 2 of the subject facility. The burning of coal appears to be the most likely alternative to the use of the prohibited fuels.

Based on the findings of the EA, which is available to the public on request, DOE has determined that the proposed action does not constitute a major Federal action significantly affecting the quality of the human environment, within the meaning of the National Environmental Policy Act of 1969, 42 U.S.C. 4321 *et seq.* Therefore, no environmental impact statement is required.

For information and single copies of the environmental assessment contact: Steve E. Ferguson, Environmental Analysis Branch, Office of Fuels Conversion, Economic Regulatory Administration, U.S. Department of Energy, 2000 M Street NW., Washington, D.C. 20461 (202) 653-3684.

FOR FURTHER INFORMATION CONTACT: Anton R. Dammer, NEPA Affairs Division, Room 4G-057, Forrestal Building, 1000 Independence Avenue, S.W., Washington, D.C. 20585 (202) 252-4610.

SUPPLEMENTARY INFORMATION: Issuance of an ESECA prohibition order will result in the conversion from natural gas and oil to coal in Martin Marietta Corporation's kilns No. 1 and No. 2. DOE has found that there are no significant environmental impacts associated with the proposed conversion of the Martin Marietta facility to coal.

Concentrations of pollutants resulting from the conversion will be substantially below the National Ambient Air Quality Standards. With the combustion of low sulfur coal (1-1.5%), projected sulfur dioxide concentrations will be significantly below the standards. Increases in particulate emissions, and resulting ambient concentrations, will be minimal due to the installation of baghouses with an estimated efficiency of 99.8%. Projected emissions of nitrogen oxides, carbon monoxide and hydrocarbons are also insignificant.

The plant modifications associated with the conversion will be minor and will be within the existing plant site, and therefore will not impact historical, archaeological or cultural resources or cause significant visual, noise, ecological and socioeconomic impacts.

Water quality impacts will be minor, with the possible exception of total iron concentrations from coal pile runoff, because concentrations will be significantly below the EPA recommended criteria and will not harm aquatic life. The potential for degradation of water quality due to total iron concentrations will be resolved pending issuance of the National Pollutant Discharge Elimination System (NPDES) permit by the Georgia Environmental Protection Division. The Martin Marietta Corporation has filed an application for an NPDES permit with the State and feels that the plant, once converted, will comply with applicable water quality criteria. The plant will operate under all mitigation measures proscribed by the State in the NPDES permit. Once in compliance with State standards, the Department of Energy has determined that the potential impacts from coal pile runoff will be insignificant and that no significant overall impact will occur due to the fuel conversion from oil to coal.

Alternatives to coal conversion which are addressed in the EA, include: 1) a fuel mixture of coal and natural gas or petroleum, 2) use of alternate fuels, such as domestic oil, refuse derived fuel (RDF), wood or synthetic fuels, 3) early retirement, and 4) no action. The analysis shows these alternatives to be either not technically feasible or unable to meet the purposes of ESECA.

Date Issued: December 1, 1980.

Ruth C. Clusen,

Assistant Secretary for Environment.

[FR Doc. 80-38410 Filed 12-10-80; 8:45 am]

BILLING CODE 6450-01-M

Voluntary Agreement and Plan of Action To Implement the International Energy Program; Meetings

In accordance with section 252(c)(1)(A)(i) of the Energy Policy and Conservation Act (42 U.S.C. 6272), notice is hereby provided of the following meetings:

I. A meeting of the Industry Advisory Board (IAB) to the International Energy Agency (IEA) will be held on December 15, 1980, at the Centre de Conferences Internationales, 19, Avenue Kleber, Paris, France, beginning at 2:00 p.m. The agenda for the meeting is as follows:

1. Opening remarks.
2. IEA proposals and/or actions of the Governing Board in regard to sharing systems.
3. Closing remarks.

Pursuant to section 252(c)(3) of the Energy Policy and Conservation Act, verbatim transcript of this meeting will be made; the transcript, with such deletions as are determined to be necessary or appropriate pursuant to E.O. 12065 (43 FR 28949, July 3, 1978), E.O. 11932 (41 FR 32691, August 5, 1976) and 22 CFR 9a.1-9a.9, will be available in the Reading Room of the Department of Energy, Room 5B-180, Forrestal Building, 1000 Independence Avenue, S.W., Washington, D.C. 20585, between

the hours of 8:00 AM and 4:00 PM weekdays, except Federal holidays.

II. A meeting of the Industry Advisory Board (IAB) to the International Energy Agency (IEA) will be held on December 16, 1980; at the Centre de Conferences Internationales, 19, Avenue Kleber, Paris, France, beginning at 9:30 a.m. The purpose of this meeting is to permit attendance by representatives of the IAB at a meeting of the IEA Standing Group on Emergency Questions (SEQ) which is being held at Paris on that date.

The agenda for the meeting is under the control of the SEQ. It is expected that the following preliminary agenda will be followed:

1. Adoption of the Draft Agenda.
2. Summary Record of the 34th Meeting.
3. *Import Target Monitoring*
   —Latest available results.
4. *Assessment of Oil Supply/Demand*
   —October 1980 Assessment
   —November 1980 Assessment
5. *Emergency Reserves*
   a. July 1, 1980 Countries' Emergency Reserves (Report to the Governing Board).
   b. October 1, 1980 Countries' Emergency Reserves.
   c. Consumer Stocks, review after six month trial.
   d. Stocks-at-Sea.
6. *Demand Restraint/Fair Sharing*
   a. Border Crossing Arrangements.
   b. Review of Greece.
   c. Review of Ireland.
   d. Review of New Zealand.
   e. Demand Restraint Review Programme.
   f. Fair Sharing Programme Review.
7. *Sharing System*
   a. Supply Right Calculation (Emergency Management Manual (EMM) change to clarify position prior to applicable Demand Restraint).
   b. Synthetic Fuels (present handling, legal position, quantification, proposal for EMM amendment).
   c. Retroactive Oil Reallocation (EMM change).
8. *AST-3*
   a. Preliminary appraisal report of operations.
   • ISAG/Secretariat joint report
   • Participating Country comments
   b. Appraisal of SEQ Emergency Group performance.
   c. Highlights of changes required to the sharing system as a result of AST-3 experience.
9. *1980 Appraisal—1981 Work Programme and Training*
10. *Dispute Settlement Center*
   a. Progress report on Governing Board actions taken (Legal Advisor's verbal comments).
   b. Procedures for arbitration and additional rules.
   c. Designation for Panel of Arbitrators.
11. *Legal Basis*.
   a. U.S. Government "Plan of Action" and renewal of EPCA (oral statement by U.S. Government).
   b. Summary of emergency legislation in Participating Countries.
   c. Effectiveness of AST-3 clearanes (verbal comments by Secretariat).
12. *Data System*
   a. Progress Report on the work of the SEQ *ad hoc* group on the Emergency Data System (including review of reporting burden).
   b. Base Period Final Consumption (BPFC) (3rd Quarter 1979—2nd Quarter 1980).
   c. Trade Discrepancies (EMM change).
13. *Other Business.*
14. *Future Meeting Dates.*

III. A meeting of Subcommittee A of the Industry Advisory Board to the International Energy Agency (IEA) will be held on December 17, 1980, at the offices of the IEA, 2 rue Andre Pascal, Paris, France, beginning at 9:30 a.m. The purpose of this meeting is to permit attendance by representatives of Subcommittee A at a meeting of an IEA Standing Group on Emergency Questions (SEQ) *ad hoc* group on SEQ/SOM Data Requirements, which is being held at Paris on that date.

The agenda for the meeting is under the control of the SEQ *ad hoc* group. It is expected that the following subjects will be discussed.

1. Information requirements of the SEQ/SOM under nonemergency conditions.
2. Quality of data supplied in Questionnaire B and the MOS/QOS systems; including trade discrepancies.
3. The monthly system of reporting in the QOS format.
4. IAB survey of systems of reporting oil statistics in IEA member countries.
5. The statistical treatment of petrochemical naphtha and other petrochemical feedstocks.
6. The statistical treatment of hydrocarbons derived from materials other than crude oil.
7. Work programme resulting from SEQ meeting of December 16.

As provided in section 252(c)(1)(A)(ii) of the Energy Policy and Conservation Act, these meetings will not be open to the public.

As permitted by 10 CFR 209.32, the usual 7-day notice period has been shortened because the International Energy Agency has only recently changed the meeting places and the agenda for two of the meetings.

Issued in Washington, D.C., December 4, 1980.

Thomas C. Newkirk,

Deputy General Counsel for Regulation.

[FR Doc. 80-38418 Filed 12-10-80; 8:45 am]

BILLING CODE 6450-01-M

Economic Regulatory Administration

J. R. Parten; Action Taken on Consent Order

AGENCY: Economic Regulatory Administration, Department of Energy.

ACTION: Notice of Action Taken on Consent Order.

SUMMARY: The Economic Regulatory Administration (ERA) of the Department of Energy (DOE) announces notice of filing a Petition for the Implementation of Special Refund Procedures for refunds received pursuant to a Consent Order.

DATE: Petition submitted to the Office of Hearings and Appeals: December 3, 1980.

FOR FURTHER INFORMATION CONTACT: Crude Producers Branch, Attn: John Marks, Office of Enforcement, Room 5002, 2000 M Street NW., Washington, D.C. 20461, Telephone Number (202) 653-3517.

SUPPLEMENTARY INFORMATION: On July 25, 1979, the Office of Enforcement of the ERA published notification in the Federal Register that it executed a Consent Order with J. R. Parten, (JRP) of Houston, Texas on July 16, 1979, 44 FR 43510 (1979). Interested persons were invited to submit comments concerning the terms, conditions or procedural aspects of the Consent Order. In addition, persons who believe they have a claim to all or a portion of the refund of overcharges paid by JRP pursuant to the Consent Order were requested to submit notice of their claims to the ERA.

Although interested persons were invited to submit comments regarding the Consent Order to the DOE, no comments were received. The Consent Order was therefore not modified.

Pursuant to the Consent Order, JRP refunded the sum of $275,000 by certified check made payable to the United States Department of Energy by February 1, 1980. This sum has been received by DOE has been placed into a suitable account pending determination of its proper distribution.

ACTION TAKEN: The ERA is unable readily to identify the persons entitled to receive the $275,000 or ascertain the amounts of refunds that such persons are entitled to receive. The ERA has therefore petitioned the Office of Hearings and Appeals (OHA) on December 3, 1980, to implement Special Refund Procedures pursuant to 10 CFR Part 205, Subpart V, 10 CFR 205.280 *et seq.* to determine the identity of persons entitled to the refunds and the amounts owing to each of them. Persons who believe they are entitled to all or a portion of the refunds should comply

with the procedures of 10 CFR Part 205, Subpart V.

Issued in Washington, D.C. on the 4th day of December, 1980.

Robert D. Gerring,

Director, Program Operations Division.

[FR Doc. 80-38420 Filed 12-10-80; 8:45 am]

BILLING CODE 6450-01-M

[Docket No. ERA-FC-80-037; OFC Case Number 67001-9020-08-12]

Powerplant and Industrial Fuel Use Act of 1978; Application for Exemption From Prohibitions; Upjohn Co.

AGENCY: Economic Regulatory Administration, Department of Energy.

ACTION: Notice of Acceptance of Petition for Exemption from the Prohibitions of the Powerplant and Industrial Fuel Use Act of 1978.

SUMMARY: On November 17, 1980, the Upjohn Company (Upjohn) filed a petition with the Economic Regulatory Administration (ERA) of the Department of Energy (DOE) for an order which would exempt a new major fuel burning installation (MFBI) from the prohibitions of the Powerplant and Industrial Fuel Use Act of 1978 (FUA or the Act) (42 U.S.C. 8301 *et seq.*). Title II of FUA prohibits the use of petroleum or natural gas as a primary energy source in certain new major fuel burning installations (MFBI's). Pertinent procedures and criteria for petitioning for exemption from the prohibitions of FUA are contained in 10 CFR Parts 500 and 501 and 10 CFR Part 503 published on June 6, 1980 at 45 FR 38276 and 38302 respectively.

Upjohn's petition was initially filed on October 16, 1980. ERA's review for acceptability was suspended upon notification from Upjohn on October 28, 1980, that certain information contained in its petition was based on inaccurate data and that a revision was forthcoming. The revision to Upjohn's petition was filed with ERA on November 17, 1980.

Eligibility and evidentiary requirements governing the permanent exemption for lack of alternate fuel supply at a cost which does not substantially exceed the cost of using imported petroleum, authorized under Section 212(a) of FUA, are set forth in ERA's final rule for new facilities at 10 CFR 503.32. Under subsection (c) of that section, a certification alternative is available for MFBI's which will be operated less than 600 hours on an annual basis, providing simplified evidentiary requirements for such facilities. Upjohn has petitioned for a permanent exemption from the prohibitions of Title II of FUA for a new petroleum and natural gas-fired packaged boiler (designated as boiler No. 8 by Upjohn) installed at its Portage Road plant, Kalamazoo, Michigan, under 10 CFR 503.32(c) based upon operation of such facility at less than 600 hours on an annual basis. ERA's decision in this proceeding will determine whether Upjohn will be granted the requested permanent exemption to use petroleum and natural gas as a primary energy source in boiler No. 8.

ERA has determined that Upjohn's petition, as revised, is complete and it is accepted as filed in accordance with 10 CFR 501.3(d). A review of the petition is provided in the SUPPLEMENTARY INFORMATION section below.

As provided for in Section 701 (c) and (d) of FUA and 10 CFR 501.63 and 501.34(b), interested persons are invited to submit written comments in regard to this matter, and any interested person may submit a written request that ERA convene a public hearing.

DATES: Written comments are due on or before January 26, 1981. A request for public hearing must also be made within the same 45-day period.

ADDRESSES: Fifteen copies of written comments or a request for a public hearing should be submitted to: Economic Regulatory Administration, Case Control Unit (Fuel Use Act), Box 4629, Room 3214, 2000 M Street, NW., Washington, D.C. 20461.

Docket Number ERA-FC-80-037 should be printed on the outside of the envelope and on the document contained therein.

FOR FURTHER INFORMATION CONTACT:

Constance L. Buckley, Chief, New MFBI Branch, Office of Fuels Conversion, Economic Regulatory Administration, 2000 M Street, NW., Room 3128-J, Washington, D.C. 20461. Phone (202) 653-4226.

Robert Goodie, Case Manager, New MFBI Branch, Office of Fuels Conversion, Economic Regulatory Administration, 2000 M Street, NW., Room 3128-M, Washington, D.C. 20461, Phone (202) 653-4257.

Allan J. Stein, Office of the General Counsel, Department of Energy, Forrestal Building, Room 6B-190, 1000 Independence Avenue, SW., Washington, D.C. 20585, Phone (202) 252-2967.

SUPPLEMENTARY INFORMATION: FUA prohibits the use of natural gas or petroleum as a primary energy source in certain new MFBI's unless an exemption for such use has been granted by ERA.

The MFBI for which the petition for exemption has been filed is a new packaged boiler having a design heat input rate of 150 million Btu's per hour and is capable of burning residual fuel oil and natural gas. The boiler, designated as boiler No. 8 by Upjohn, is installed at Upjohn's Portage Road plant at Kalamazoo, Michigan, and will be used to supply steam as a backup for the seven existing boilers at the Portage Road plant.

Pursuant to the provisions of 10 CFR 503.32, Upjohn has petitioned for a permanent exemption for boiler No. 8 based upon a lack of an alternate fuel supply at a cost which does not substantially exceed the cost of using imported petroleum. In lieu of making the evidentiary submission for that exemption, paragraph (c) of 10 CFR 503.32 provides a certification alternative for installations if the MFBI for which the exemption is being requested will be operated less than 600 hours on an annual basis.

Upjohn has utilized the certification alternative provided for in 10 CFR 503.32(c) and has included in its petition the following duly executed certifications:

(1) Boiler No. 8 will be operated annually less than 600 hours full load equivalent.

(2) The use of a mixture of petroleum or natural gas and an alternate fuel for which an exemption would be available is not economically or technically feasible.

(3) Pursuant to 10 CFR 503.15(b), Upjohn will, prior to operating the boiler No. 8 under the exemption, secure all applicable environmental permits and approvals pursuant to, but not limited to, the following: Clean Air Act, Clean Water Act, Rivers and Harbors Act, Coastal Zone Management Act and the Resource Conservation and Recovery Act; and

(4) Information required by the Environmental Checklist pursuant to 10 CFR 503.15(b).

Additionally, Upjohn has stated in its petition that it agrees, upon grant of the requested exemption, to the following terms and conditions specified in 10 CFR 503.32(d):

(1) Boiler No. 8 will be operated less than 600 hours full load equivalent annually.

(2) All steam pipes will be insulated and all steam traps properly maintained.

(3) The quality of any petroleum to be burned in the unit will be of the lowest grade available, technically feasible, and capable of being burned consistent with applicable environmental requirements.

(4) Upjohn shall report annually the hours of use and the fuel consumption in the previous calendar year for boiler No. 8.

(5) Upjohn must comply with any terms or conditions which may be imposed pursuant to the environmental requirements of 10 CFR 503.15(b).

ERA hereby gives notice that Upjohn's petition for a permanent exemption for boiler No. 8, as revised, has been

determined to be complete as filed and is accepted. Pursuant to 10 CFR 501.3(d), acceptance of a petition and its supporting documents does not constitute an approval of an exemption, nor does it foreclose ERA from requesting further information during the course of the proceeding. Failure to provide any requested additional information could ultimately result in the denial of the request for exemption.

A public file containing documents on this proceeding is available for inspection upon request at: Economic Regulatory Administration, Room B-110, 2000 M Street, NW., Washington, D.C. 20461, Monday through Friday, 8:00 a.m.-4:30 p.m.

Issued at Washington, D.C. on December 8, 1980.

Robert L. Davies,

Assistant Administrator, Office of Fuels Conversion, Economic Regulatory Administration.

[FR Doc. 80-38417 Filed 12-10-80; 8:45 am]

BILLING CODE 6450-01-M

Proposed Remedial Orders

Pursuant to 10 CFR 205.192(c), the Economic Regulatory Administration of the Department of Energy hereby gives Notice that the following Proposed Remedial Orders have been issued. These Proposed Remedial Orders allege violations of applicable law as indicated.

A copy of the Proposed Remedial Orders, with confidential information deleted, may be obtained from Thomas M. Holleran, Program Manager for Product Retailers, 2000 M Street, NW, Washington, DC 20461, phone 202/653-3569. Within 15 days of publication of this notice, any aggrieved person may file a Notice of Objection with the Office of Hearings and Appeals, 2000 M Street, NW, Washington, DC 20461, in accordance with 10 CFR 205.193.

Issued in Washington, DC on the 8th day of December, 1980.

Robert D. Gerring,

Director, Enforcement Program Operations Division, Economic Regulatory Administration.

Proposed Remedial Orders, Washington, D.C. Metropolitan Area

Station and address	Date	Violation amount	Cents per gallon in violation
Garland Exxon—1720 New York Avenue NE Washington, D.C. 20002	Dec. 1, 1980	$14,560	4

[FR Doc. 80-38419 Filed 12-10-80; 8:45 am]

BILLING CODE 6450-01-M

ENVIRONMENTAL PROTECTION AGENCY

[RD-FRL 1698-7]

Ambient Air Monitoring Reference and Equivalent Methods; Reference Method Designation

Notice is hereby given that EPA, in accordance with 40 CFR Part 53 (40 FR 7044, 41 FR 11255), has designated another reference method for the measurement of ambient concentrations of carbon monoxide. The new reference method is an automated method (analyzer) which utilizes a measurement principle based on the absorption of infrared radiation by carbon monoxide in a non-dispersive photometer. This method is based on an out-of-production infrared analyzer model (originally distributed by the Intertech Corporation) as currently modified and maintained by the applicant, the Commonwealth of Massachusetts, for use in its own monitoring program. The method, described as follows, is not now commercially available:

FRCA-1280-050, "MASS-CO, Model 1 Carbon Monoxide Analyzer", operated on a range of 0-50 ppm, with automatic zero and span adjustments at time intervals not to exceed four (4) hours, consisting of the following components:

(1) Infra-2 (Uras 2) Infrared Analyzer Model 5611-200-35

(2) Automatic Calibrator Model 5869-111

(3) Electric Gas Cooler Model 7865-222 or equivalent with prehumidifier

(4) Diaphragm Pump Model 5861-214 or equivalent

(5) Membrane Filter Model 5862-111 or equivalent

(6) Flow Meter Model SK 1171-U or equivalent

(7) Recorder Model Mini Comp DN 1/192 or equivalent and with or without the following option: 100 millivolt and 5 volt output option.

A notice of receipt of application for this method appeared in the Federal Register, Volume 45, March 6, 1980, page 14648.

A test analyzer representative of this method has been tested by the applicant, the Commonwealth of Massachusetts, in accordance with the test procedures specified in 40 CFR Part 53. After reviewing the results of these tests and other information submitted by the applicant, EPA has determined, in accordance with Part 53, that this method should be designated as a reference method. The information submitted by the applicant will be kept on file at the address shown below and will be available for inspection to the extent consistent with 40 CFR Part 2 (EPA's regulations implementing the Freedom of Information Act).

As a reference method, this method is acceptable for use by the Commonwealth of Massachusetts for purposes of 40 CFR Part 58, Ambient Air Quality Surveillance (44 FR 27571, May 10, 1979). For such use, the method must be used in strict accordance with the approved operation or instruction manual associated with the method, and subject to any limitations (e.g., operating range) specified in the applicable designation (see description of the method above).

Designation of this reference method will provide assistance to the Commonwealth of Massachusetts in continuing the operation of their air quality surveillance systems under Part 58. Additional information concerning this action may be obtained by writing to Director, Environmental Monitoring Systems Laboratory, Department E (MD-77), U.S. Environmental Protection Agency, Research Triangle Park, North Carolina 27711. Technical questions concerning the method should be directed to the Commonwealth of Massachusetts, Department of Environmental Quality Engineering, Division of Air Quality Control, Tewksberry State Hospital, Tewksberry, Massachusetts 01876.

Richard Dowd,

Acting Assistant Administrator for Research and Development.

December 8, 1980.

[FR Doc. 80-38377 Filed 12-10-80; 8:45 am]

BILLING CODE 6560-35-M

[PF-206; PH-FRL 1698-5]

Certain Pesticide Chemicals; Filing of Pesticide and Food/Feed Additive Petitions

AGENCY: Environmental Protection Agency (EPA).

ACTION: Notice.

SUMMARY: This notice announces that FMC Corp. has filed requests with the EPA to establish tolerances and food/feed additive regulations for certain pesticide chemicals.

ADDRESS: Written comments and inquiries to: Designated Product Manager (PM), Registration Division, (TS-767), Office of Pesticide Programs, Environmental Protection Agency, 401 M St., SW., Washington, D.C. 20460.

Written comments may be submitted while a petition is pending before the agency. The comments are to be identified by the document control number "[PF-206]" and the specific

petition number. All written comments filed pursuant to this notice will be available for public inspection in the product manager's office from 8:00 a.m. to 4:00 p.m., Monday through Friday, excluding holidays.

FOR FURTHER INFORMATION CONTACT: The designated product manager at the telephone number given in each petition.

SUPPLEMENTARY INFORMATION: EPA gives notice that the following pesticide petition and food/feed additive petition have been submitted to the agency to establish a tolerance and a food/feed additive regulation on certain raw agricultural commodities in accordance with the Federal Food, Drug, and Cosmetic Act. The analytical method for determining residues, where required, is given in each specific petition.

PP OF2425. FMC Corp., Agricultural Chemical Group, 200 Market St., Philadelphia, PA 19103. Proposes amending 40 CFR 180.378 by establishing a tolerance for residues of the insecticide permethrin [(3-phenoxyphenyl) methyl 3-(2, 2/ dichloroethenyl)-2,2-dimethylcyclopropanecarboxylate)] in or on the raw agricultural commodity pears at 0.05 part per million (ppm). The proposed analytical method for determining residues is gas chromatography with multiple ion detection mass spectrometry. (PM 17, Franklin D. R. Gee, Rm. E-341, 202-755-1150)

FAP OH5276. FMC Corp., Agricultural Chemical Group, 200 Market St., Philadelphia, PA 19103. Proposes amending 21 CFR 193 and 561 by establishing regulations permitting the residues of the insecticide carbofuran (2,3-dihydro-2,2-dimethyl-7-benzofuranyl-N-methylcarbamate) its carbamate metabolite 2,3-dihydro-2, 2-dimethyl-3-hydroxy-7-benzofuranyl-N-Methylcarbamate, and the phenolic metabolites on the commodity sunflower oil at 0.2 ppm and the feed items sunflower seed hulls and sunflower seed meal at 1.0 ppm. (PM 12, Jay S. Ellenberger, Rm. E-303, 202-426-2635).

(Secs. 408(d)(1), 68 Stat. 512, (7 U.S.C 136); 409(b)(5), 72 Stat. 1786, (21 U.S.C. 348))

Dated: December 3, 1980.

Douglas D. Campt,

Director, Registration Division Office of Pesticide Programs.

[FR Doc. 80-38397 Filed 12-10-80; 8:45 am]

BILLING CODE 6560-32-M

[PF-141A; PH-FRL 1698-2]

Dow Chemical Co.; Filing of Pesticide Petition; Amendment

AGENCY: Environmental Protection Agency (EPA).

ACTION: Notice.

SUMMARY: Dow Chemical USA, P.O. Box 1706, Midland, MI 48640, has submitted an amendment to pesticide petition 9F2221. The amendment proposes increasing the tolerance for the combined residues of the insecticide chlorpyrifos [*0,0*-diethyl *O*-(3,5,6-trichloro-2-pyridyl) phosphorothioatel and its metabolite 3,5,6-trichloro-2-pyridinol in or on the raw agricultural commodities pumpkins, cucumbers, and seed and pod vegetables from 0.05 part per million (ppm) to 0.1 ppm.

ADDRESS: Written comments to: Jay S. Ellenberger, Product Manager (PM) 12, Registration Division (TS-767), Office of Pesticide Programs, Environmental Protection Agency, Rm. E-303, 401 M St. SW., Washington, D.C. 20460.

Written comments on this amendment should bear a notation indicating the petition and the document control number "[PF-141A]." Comments may be made at any time while the petition is pending before the agency. All written comments filed pursuant to this notice will be available for public inspection in the office of the product manager, from 8:00 a.m. to 4:00 p.m., Monday through Friday, except legal holidays.

FOR FURTHER INFORMATION CONTACT: Jay S. Ellenberger (202-426-2635).

SUPPLEMENTARY INFORMATION: EPA issued a notice that published in the Federal Register of July 30, 1978 (44 FR 44615) that Dow Chemical USA, P.O. Box 1706, Midland, MI 48640, had submitted a pesticide petition proposing to amend 40 CFR 180.342 by establishing tolerances for the combined residues of the insecticide chlorpyrifos [*0,0*-diethyl *O*-(3,5,6-trichloro-2-pyridyl) phosphorothioatel and its metabolite 3,5,6-trichloro-2-pyridinol in or on the raw agricultural commodities cucumbers, pumpkins, and seed and pod vegetables at 0.05 ppm, apples at 1.0 ppm, and bean and pea forage at 1.0 ppm.

Dow Chemical Co. has submitted an amendment proposing to increase the tolerance in or on the raw agricultural commodities pumpkins, cucumbers, and seed and pod vegetables from 0.05 ppm to 0.1 ppm.

(Sec. 408(d)(1); 68 Stat. 512, (7 U.S.C. 135))

Dated: December 3, 1980.

Douglas D. Campt,

Director, Registration Division, Office of Pesticide Programs.

[FR Doc. 80-38398 Filed 12-10-80; 8:45 am]

BILLING CODE 6560-32-M

[OPTS-51180; TSH-FRL 1698-6]

Polymer of Tall Oil Fatty Acids, Neopentyl Glycol, Trimethylol Ethane, Phthalic Anhydride, Premanufacture Notice

AGENCY: Environmental Protection Agency (EPA).

ACTION: Notice.

SUMMARY: Section 5(a)(1) of the Toxic Substances Control Act (TSCA) requires any person who intends to manufacture or import a new chemical substance to submit a premanufacture notice (PMN) to EPA at least 90 days before manufacture or import commences. Section 5(d)(2) requires EPA to publish in the Federal Register certain information about each PMN within 5 working days after receipt. This Notice announces receipt of a PMN and provides a summary.

DATE: Written comments by January 12, 1981.

ADDRESS: Written comments to: Document Control Officer (TS-793), Management Support Division, Office of Pesticides and Toxic Substances, Environmental Protection Agency, Rm. E-447, 401 M St., SW., Washington, DC 20460, (202-755-8050).

FOR FURTHER INFORMATION CONTACT: Robert Jones, Chemical Control Division (TS-794), Office of Pesticides and Toxic Substances, Environmental Protection Agency, Rm. E-208, 401 M St., SW., Washington, DC 20460, (202-426-8816).

SUPPLEMENTARY INFORMATION: Section 5(a)(1) of TSCA [90 Stat. 2012 (15 U.S.C. 2604)], requires any person who intends to manufacture or import a new chemical substance to submit a PMN to EPA at least 90 days before manufacture or import commences. A "new" chemical substance is any substance that is not on the Inventory of existing substances compiled by EPA under section 8(b) of TSCA. EPA first published the Initial Inventory on June 1, 1979. Notices of availability of the Inventory were published in the Federal Register of May 15, 1979 (44 FR 28558-Initial) and July 29, 1980 (45 FR 50544-Revised). The requirement to submit a PMN for new chemical substances

manufactured or imported for commercial purposes became effective on July 1, 1979.

EPA has proposed premanufacture notification rules and forms in the Federal Register issues of January 10, 1979 (44 FR 2242) and October 16, 1979 (44 FR 59764). These regulations, however, are not yet in effect. Interested persons should consult the Agency's Interim Policy published in the Federal Register of May 15, 1979 (44 FR 28564) for guidance concerning premanufacture notification requirements prior to the effective date of these rules and forms. In particular, see page 28567 of the Interim Policy.

A PMN must include the information listed in section 5(d)(1) of TSCA. Under section 5(d)(2) EPA must publish in the Federal Register nonconfidential information on the identity and use(s) of the substance, as well as a description of any test data submitted under section 5(b). In addition, EPA has decided to publish a description of any test data submitted with the PMN and EPA will publish the identity of the submitter unless this information is claimed confidential.

Publication of the section 5(d)(2) notice is subject to section 14 concerning disclosure of confidential information. A company can claim confidentiality for any information submitted as part of a PMN. If the company claims confidentiality for the specific chemical identity or use(s) of the chemical, EPA encourages the submitter to provide a generic use description, a nonconfidential description of the potential exposures from use, and a generic name for the chemical. EPA will publish the generic name, the generic use(s), and the potential exposure descriptions in the Federal Register.

If no generic use description or generic name is provided, EPA will develop one and after providing due notice to the submitter, will publish an amended Federal Register notice. EPA immediately will review confidentiality claims for chemical identity, chemical use(s), the identity of the submitter, and for health and safety studies. If EPA determines that portions of this information are not entitled to confidential treatment, the Agency will publish an amended notice and will place the information in the public file, after notifying the submitter and complying with other applicable procedures.

After receipt, EPA has 90 days to review a PMN under section 5(a)(1). The section 5(d)(2) Federal Register notice indicates the date when the review period ends for each PMN. Under section 5(c), EPA may, for good cause, extend the review period for up to an additional 90 days. If EPA determines that an extension is necessary, it will publish a notice in the Federal Register.

Once the review period ends, the submitter may manufacture the substance unless EPA has imposed restrictions. When the submitter begins to manufacture the substance, he must report to EPA, and the Agency will add the substance to the Inventory. After the substance is added to the Inventory, any company may manufacture it without providing EPA notice under section 5(a)(1)(A).

Therefore, under the Toxic Substances Control Act, a summary of the data taken from the PMN is published herein.

Interested persons may, on or before January 12, 1981 submit to the Document Control Officer (TS-793), Management Support Division, Office of Pesticides and Toxic Substances, Environmental Protection Agency, Rm. E-447, 401 M St., SW., Washington, DC 20460, written comments regarding this notice. Three copies of all comments shall be submitted, except that individuals may submit single copies of comments. The comments are to be identified with the document control number "[OPTS-51180]" and the PMN number. Comments received may be seen in the above office between 8:00 a.m. and 4:00 p.m., Monday through Friday, excluding legal holidays.

(Sec. 5, 90 Stat. 2012 (15 U.S.C. 2604))

Dated: December 4, 1980.

Edward A. Klein,

Director, Chemical Control Division.

PMN 80-307.

The following summary is taken from data submitted by the manufacturer in the PMN.

Close of Review Period. January 27, 1981.

Manufacturer's Identity. Claimed confidential business information. Generic information provided:

Annual sales—Between $100 million and $499,999,999.

Manufacturing site—Northeastern U.S.

Standard Industrial Classification Code—285 "Paints, Varnishes, Lacquers, Enamels, and Allied Products".

Special Chemical Identity. Polymer of tall oil fatty acids, neopentyl glycol, trimethylol ethane, phthalic anhydride.

Use. Resin for low volatile organic content coatings.

Production Estimates

	Kilograms per year	
	Minimum	Maximum
First year	6,000	30,000
Second year	30,000	80,000
Third year	30,000	100,000

Physical/Chemical Properties

Color (Gardner Holdt)—8 maximum
Viscosity (Gardner Holdt)—Z-Z2
Acid Value—10-15
Weight/gallon—8.7 lb
Non-volatile by weight—75%
Volatile—Xylene
Non-volatile by volume—70%

Toxicity Data. No data were submitted.

Exposure

Activity and exposure route(s)	Maximum number exposed	Maximum duration		Concentration (unit: ppm)	
		Hours/day	Days/year	Average	Peak
Manufacture: Dermal	11	8	17		
Processing: Dermal	12	8	100		
Use: Inhalation, dermal, eye	30	8	250	>100	>100

Environmental Release/Disposal. (3 sites):

Media—Amount/Duration of Chemical Release (kg/yr)
Air—Will range from <10 to 100. 8-24 hr/da; 13-250 da/yr
Land—Range from 100 to 10,000
Water—Range from <10 to 100

The submitter states that disposal will be by incineration and/or landfill.

[FR Doc. 80-38396 Filed 12-10-80; 8:45 am]
BILLING CODE 6560-31-M

[AD-FRL 1694-2]

Standards of Performance for New Stationary Sources: Stationary Gas Turbines; Denial of Petition To Revise

AGENCY: Environmental Protection Agency (EPA).

ACTION: Denial of petition to revise a standard.

SUMMARY: Dow Chemical Company, PPG Industries, Inc., and Diamond Shamrock Corporation (Dow, et al.) have petitioned EPA to revise the new source performance standards (NSPS) for stationary gas turbines that were promulgated on September 10, 1979 (44 FR 52792). The petitioners seek revision of the standards of performance for nitrogen oxides (NO_x). The Administrator finds that much of the information in the petition was, or could have been, presented during the original rulemaking, and that the information does not provide substantial support for the argument of Dow, et al., that the standard should be revised. The petition is therefore denied.

ADDRESSES: The gas turbine (GT) record contains all supporting materials used by EPA in developing the standards and materials pertaining to the request to revise the standard. The record is available for public inspection and copying between 9 a.m. and 4 p.m., Monday through Friday at the Standards Development Branch, Emission Standards and Engineering Division, Office of Air Quality Planning and Standards, U.S. EPA, 411 West Chapel Hill Street, Room 1029, Durham, N.C. 27701.

FOR FURTHER INFORMATION CONTACT: Mr. Don R. Goodwin, Director, Emission Standards and Engineering Division (MD13), Environmental Protection Agency, Research Triangle Park, North Carolina 27711, telephone (919) 541-5271.

SUPPLEMENTARY INFORMATION:

Background

On October 3, 1977, pursuant to Section 111 of the Clean Air Act, EPA proposed standards of performance to limit emissions of nitrogen oxides (NO_x) and sulfur dioxide (SO_2) from new, modified, and reconstructed stationary gas turbines with a heat input at peak load equal to or greater than 10.7 gigajoules per hour (about 1000 horsepower) (42 FR 53782). From 1972 to 1976, during investigation of an appropriate standard, EPA held 39 meetings with industry, 22 of which were with 5 different turbine manufacturers: General Electric Company, Turbo Power and Marine Systems, Turbodyne Corporation (now Brown Boveri Turbodyne Inc.), Westinghouse Electric Corporation, and Solar Division of International Harvester. The proposal of the standard was also preceded by four National Air Pollution Control Techniques Advisory Committee (NAPCTAC) meetings (February 21, 1973; May 30, 1973; January 9, 1974; and August 10, 1976) on the new source performance standards for stationary gas turbines. The NAPCTAC meetings were open to the public and interested parties were advised of the meetings by notice in the Federal Register. The post-proposal public comment period extended from October 3, 1977, to January 31, 1978.

After the Agency had carefully evaluated the 78 comment letters and related documents received, the Administrator published the final standards in the Federal Register on September 10, 1979.

Dow, et al., petitioned the Administrator to revise the standards. They also filed a petition for judicial review of the standards in the United States court of Appeals for the District of Columbia Circuit. *Dow Chemical Co. et al. v. EPA*, No. 79-2334. EPA and Dow et al. later filed a joint motion in the *Dow* case, in which EPA represented that it would be able to respond to the petition to revise by December 1, 1980, and the parties stipulated to a stay of the judicial proceedings until that date.[1]

The procedures for petitioning EPA to revise rules promulgated under the Clean Air Act are set forth in *Oljato Chapter of the Navajo Tribe v. EPA*, 515 F. 2d 654, 666 (D.C. Cir. 1975). The procedures described in *Oljato* are essentially that (1) a petition for revision of such a rule, along with any supporting material, should first be submitted to the Agency; (2) the Agency should respond to the petition and, if it denies the petition, set forth its reasons; and (3) if the petition is denied, the petitioner may seek judicial review pursuant to Section 307(b) of the Act. *Oljato, supra*, 515 F. 2d at 666. By this notice the Agency is responding to the petition to revise and is setting forth the reasons for its decision.

[1]After the petition to revise had been filed and EPA had undertaken to respond to it by December 1, 1980, PPG submitted to the Agency an additional petition to revise the standard, based on different facts and arguments from those in the petition of Dow, et al. EPA advised the petitioners that it would not be possible to respond to the new PPG petition along with the Dow et al. petition by December 1. EPA will respond to the PPG petition at a later date.

Criteria for Evaluating the Petition

The procedure contained in *Oljato* was designed to address the situation where purportedly new information becomes available after promulgation of a rule. The Court concluded that such "new information" should be presented to the Agency first so that it may determine what administrative action, if any, should be taken before the matter is reviewed by a court. Under this scheme, the threshold determination to be made is whether a petitioner has submitted "new information."

If the information supporting a petition was raised or could have been raised in the original rulemaking, the Agency does not consider it new information of the sort contemplated by the *Oljato* scheme and, accordingly, would not view it as warranting reopening the previous rulemaking. This view is consistent both with the final sentence of Section 307(b)(1), which *Oljato* interpreted, and with Section 307(d)(7)(B) of the Act, which governs certain petitions for reconsideration.[2] Moreover, to hold otherwise would permit a petitioner to circumvent the limitation on judicial review specified in Section 307(b)(1) of the Act. That section reads in pertinent part:

> Any petition for review under this subsection shall be filed within sixty days from the date notice of such promulgation, approval, or action appears in the Federal Register, *except that if such petition is based solely on grounds arising after such sixtieth day*, then any petition for review under this subsection shall be filed within sixty days after such grounds arise. (emphasis added)

Section 307(b)(1) is designed to bring about a measure of finality to Agency rulemaking by limiting the period during which challenges can be made. If a party could cure its failure to seek judicial review during the period specified by petitioning the Agency for

[2]Section 307(d)(7)(B) requires the Agency to convene a proceeding to reconsider a rule if the person raising an objection can demonstrate, among other things, that it was impractical to raise such objection during the comment period or that the grounds for such objection arose after the comment period but within the time specified for judicial review. Dow, et al. do not rely on Section 307(d)(7)(B), and it is not applicable. Section 307(d) applies to rules which were proposed after November 5, 1977, while this NSPS was proposed on October 3, 1977. In enacting Section 307(d)(7)(B), however, Congress was aware of the *Oljato* decision and intended to confirm it, particularly in requiring that purportedly new information be presented first to EPA so that the Agency may determine, in the first instance, whether supplementary proceedings are warranted. See H.R. Rep. No. 95-294, 95th Cong., 1st Sess. 323 (1977). Accordingly, it is appropriate to view Section 307(d)(7)(B) as offering some guidance in assessing petitions for revision that purport to be based on new information and are subject to procedures set forth in *Oljato*.

revision or revocation of the original rulemaking, based on information that was available at the time of the original rulemaking, and then seeking judicial review of the Agency's action on the petition, one of the main purposes of Section 307(b)(1) would be defeated.[3]

Assuming the information presented in the petition is "new" in the sense that it was not and could not have been presented in the original rulemaking, the Agency must then determine whether it warrants convening a supplemental rulemaking to consider revision or revocation of the regulation in question.

Although the Act does not provide specific criteria for making such a determination in the context of petitions for revision or revocation of regulations, the standard of review applicable under the Administrative Procedure Act suggests that the threshold decision (i.e., the determination whether the petition and supporting materials warrant further rulemaking proceedings) is whether, in light of the information presented, the decision is arbitrary, capricious, or an abuse of discretion.[4] In addition, Section 307(d)(7)(B) provides some guidance in determining whether new information warrants the commencement of supplementary proceedings.[5] That section requires the Agency to convene a proceeding for reconsideration if the new grounds presented are of "central relevance to the outcome of the rule." In EPA's view, the new grounds are of such "central relevance" only if they provide substantial support for the argument that the standard should be revised. See Denial of Petition for Reconsideration or Revision of the Lead Ambient Air Quality Standards, 45 FR 41211 (June 18, 1980); Denial of petition to repeal regulations controlling lead content in gasoline, 45 FR 54090 (August 14, 1980). As a general matter, the Agency concludes that the proper test in assessing new information in the context of a petition for revision or revocation of a rule is roughly the same as that for petitions for reconsideration under Section 307(d)(7)(B).[6]

In summary, the criteria for deciding whether to initiate a new rulemaking proceeding in response to the petition are that: (1) the petition must be based on information that was not and could not reasonably have been presented during the original rulemaking; and (2) the petition must provide substantial support for the argument that the standard should be revised.

Summary of Standards

Applicability

The new source performance standards for stationary gas turbines apply to all new, modified, and reconstructed stationary gas turbines with a heat input at peak load equal to or greater than 10.7 gigajoules per hour (about 1000 horsepower). The standards apply to simple and regenerative cycle gas turbines and to the gas turbine portion of a combined cycle steam/electric generating system.

NO_x Standards

The NO_x standards limit the concentration of nitrogen oxides (NO_x) in the exhaust gases from stationary gas turbines with a heat input from 10.7 to and including 107.2 gigajoules per hour (about 1000 to 10,000 horsepower), from offshore platform gas turbines, and from stationary gas turbines used for oil or gas transportation and production not located in a Metropolitan Statistical Area (MSA), to 0.0150 percent by volume (150 ppm) at 15 percent oxygen on a dry basis. The standards also limit the concentration of NO_x in the exhaust gases from stationary gas turbines with a heat input greater than 107.2 gigajoules per hour, and from stationary gas turbines used for oil or gas transportation and production located in an MSA, to 0.0075 percent by volume (75 ppm) at 15 percent oxygen on a dry basis (see Table 1, 44 FR 52792, for summary of NO_x emission limits). The 75 ppm limits are based on the use of wet controls (water or steam injection) to reduce the NO_x emissions. both of these emission limits (75 and 150 ppm) are adjusted upward for gas turbines with thermal efficiencies greater than 25 percent using an equation included in the standards. These emission limits are also adjusted upward for gas turbines burning fuels with a nitrogen content greater than 0.015 percent by weight using a fuelbound nitrogen allowance factor included in the standards, or a "custom" fuelbound nitrogen allowance factor developed by the gas turbine manufacturer and approved for use by EPA. Custom fuelbound nitrogen allowance factors must be substantiated with data and approved for used by the Administrator before they may be used for determining compliance with the standards.

The NO_x emission limits are referenced to International Standard Organization (ISO) standard day conditions of 288 degrees Kelvin, 60 percent relative humidity, and 101.3 kilopascals (1 atmosphere) pressure. Measured NO_x emission levels, therefore, are adjusted to ISO reference conditions by use of an amibent condition correction factor included in the standards or by a custom ambient condition correction factor developed by the gas turbine manufacturer and approved for use by EPA. Custom ambient condition correction factors can only include the following variables: combustor inlet pressure, ambient air pressure, ambient air humidity, and ambient air temperature. These factors must be substantiated with data and approved for use by the Administrator before they may be used for determining compliance with the standards.

NO_x Delayed Applicability

Stationary gas turbines with a heat input at peak load from 10.7 to and including 107.2 gigajoules per hour are to be exempt from the NO_x emission limit standard for five years from the date of proposal of the standards (October 3, 1977). Gas turbines with this heat input at peak load which are constructed, modified, or reconstructed during this five year period do not have to comply with the NO_x emission limit standard at the end of this period. Only those new gas turbines which are constructed, or existing gas turbines which are modified or reconstructed following this five-year period must comply with the NO_x emission limit.

NO_x Exemptions

Emergency-standby gas turbines, military training gas turbines, gas turbines involved in certain research and development activities, and firefighting gas turbines are exempt from compliance with the NO_x emission limits standard. In addition, stationary gas turbines using wet controls are temporarily exempt from the NO_x emission limit during those periods when ice fog created by the gas turbine is deemed by the owner or operator to present a traffic hazard and during

[3] In a somewhat analogous content, the courts have viewed with disfavor attempts to present information or arguments in judicial review that could have been (but were not) first presented during the rulemaking process. *E.g., Lead Industries Association v. EPA*, No. 78-2201, slip op. at 87-88 (D.C. Cir. June 27, 1980); *American Iron and Steel Institute v. EPA*, 528 F. 2d 1027, 1050 (3rd Cir. 1975). Similarly, Congress provided in Section 307(d)(7)(B) that "only an objection to a rule or procedure which was raised with reasonable specificity during the period for public comment (including any public hearing) may be raised during judicial review." Congress obviously sought to have parties raise all available objections during the rulemaking proceeding or not at all. The only exception provided is for objections based on "new information" of the sort specified in Section 307(d)(7)(B).

[4] *Cf. Union Electric v. EPA*, 427 U.S. 246; 256 (1975).

[5] See note 3, *supra*.

[6] For purposes of this decision, it is unnecessary to decide whether a greater or lesser showing is required to meet this test under Section 307(d)(7)(B) than in the present context.

periods of drought when water is not available.

SO_2 Standards

The standards limit the SO_2 concentration in the exhaust gases from stationary gas turbines with a heat input at peak load of 10.7 gigajoules per hour or more to 0.015 percent by volume (150 ppm) corrected to 15 percent oxygen on a dry basis. The standards include an alternative SO_2 emission limit on the sulfur content of the fuel of 0.8 percent sulfur by weight. There are no exemptions to the sulfur dioxide (SO_2) emission limit other than its inapplicability to stationary gas turbines with a heat input at peak load less than 10.7 gigajoules per hour (see Table 1, 44 FR 52792, for summary of SO_2 emission limits).

Petition for Revision

I. Summary of Petition

The three petitioners are major industrial firms and each is a potential owner/operator of one or more new gas turbines which would be subject to the provisions of 40 CFR 60.330, Subpart GG. The turbines used by the firms would typically be located at an industrial process site and may be in either a simple cycle configuration for producing electricity, or combined with a boiler or heat exchanger (i.e., a combined cycle) to also produce process steam and/or electricity.

The issues raised by the petitioners are described in 3 separate memoranda submitted on February 1, 1980; February 25, 1980; and August 14, 1980. In the February 1, 1980, memorandum, the petitioners formally requested "the Environmental Protection Agency to re-evaluate the Standards of Performance for New Stationary Sources; Gas Turbines as the standards relate to industrial combined cycles used as an integral part of industrial processes." The request for re-evaluation is premised on four principal arguments:

"1. The Agency did not take into account the special role of a combined cycle gas turbine as an integral part of an industrial process and the special problems which users of such turbines may experience under the Standards.

2. There has been substantial improvement in dry controls techniques during the past 12 to 18 months so that the standards should be achievable within two to four years using dry controls methods. Under such circumstances the Agency should not force petitioners to install expensive, energy wasteful wet controls technology when a less costly, more efficient control system will be available shortly.

3. Because of the explosive increase in the price of oil, the per ton cost of removing NO_x by wet controls has increased to such a degree that any benefits to be achieved from the Standards are grossly disproportionate to the costs involved. In addition, the standards have apparently been based on technical and cost data that are obsolete.

4. By refusing to give credit for combined cycle operations the Agency has penalized the most energy efficient form of power and steam generation. Such a policy is directly at odds with national policy and does not make good regulatory sense."

The petitioners' submittals of February 25, 1980, and August 14, 1980, supplement their initial memorandum. In their August 14, 1980, memorandum they set forth their belief "that the record developed by the Agency for the NSPS for stationary gas turbines demonstrates that the Agency failed to consider the "representativeness" regarding operating cycles—especially in the chemical process industry—of the data relied upon in the support documents of the NSPS."

EPA representatives and representatives of the petitioning firms have met on January 14, 1980; March 7, 1980, May 28, 1980, and October 21, 1980, for the purpose of discussing the issues raised by the petitioners and assuring that there is a common understanding of these issues. The petitioners have made clear that their principal concerns pertaining to "representativeness" are based on the following beliefs: that industrial turbine applications represent a special case, requiring continuous operation, in contrast to an intermittent or peaking operation which is more common in the electric utility sector; that continuous operation requires greater reliability than peaking operations and the consequences of poor reliability and high maintenance can be severe at an industrial plant; and that the use of water injection to control NO_x emissions may reduce reliability.

II. Summary of Petition Response

Petitioners have supplied EPA with data in their memoranda that in large part was available during the original rulemaking procedure. Petitioners made no comment during the four public NAPCTAC meetings and of the three petitioners only Dow Chemical Company commented during the public comment period following proposal (IV-D-22). Dow did not mention that the data base for the standard was not representative of large continuously operated combined cycle industrial gas turbines which are at issue in this reconsideration proceeding.

The Agency has however, reviewed the issues raised by the petitioners and, in particular, has reviewed the data and analysis on which the standard is based with respect to its representativeness of industrial combined cycles. This review confirmed that the Agency did take into account: all factors pertinent to the potential use of combined cycle gas turbines for industrial use and the performance capability of such turbines under the standards; the expected evolution of dry controls and the potential availability of these controls to meet the standard in the future; the costs of the technology upon which the standard is based; and alternative formats which were available for specifying the standard and the merits of these alternative formats with respect to the requirements of the Clean Air Act, energy and other impacts.

It is the Administrator's conclusion that the data and analysis used in establishing the standard and an up-date of this data base to include recent experience show that wet controls represent the most effective control system applicable to industrial simple or combined cycle gas turbines. The cost, energy and non-air environmental impacts of these control systems were evaluated and concluded to be reasonable; therefore, wet controls are considered to represent the best system of emission reduction.

It should be further noted that there are two types of wet control systems available—water injection and steam injection. The standard can be met using either system and selection of the most appropriate system by a turbine owner would be based on specific factors in each case. In general, steam injection is the more energy efficient of the two technologies and the extensive performance history of turbines using steam injection provides a record of reliable long term (averaging up to 7000 hr/year) operation which has not been contested by the petitioners. Steam is available at industrial sites—either from the combined cycle steam generator, or from a separately fired on-site steam generator. In this regard, the industrial combined cycle turbine represents a unique case particularly suited to the use of steam injection since steam is generated in the combined cycle. When new turbines are planned for use as part of a new combined cycle installation, provisions for the complete steam injection and control system may be included in and optimized in the initial design. Steam injection is, therefore, a technology available to industrial

turbine users, even if the petitioners' concerns regarding water injection are valid (and the record shows they are not).

The total number of operating hours logged by turbines with wet control systems, both water and steam, shows clearly that turbines can operate for the extended periods desired by industrial turbine owners. The record shows that the use of water or steam injection in properly designed and operated turbines does not interfere with turbine reliability or availability. Thus, if turbine reliability is acceptable for a particular application without controls, it will continue to be acceptable with controls.

The standard was supported by substantial data on industrial combined cycle gas turbines injecting steam with no control related maintenance problems. Also, the data obtained from utility turbines using wet controls are applicable to industrial use. The fact that a utility may in some cases take two or more years to log the same operating time that an industrial user may log in one year does not suggest that industrial use is more demanding. In fact, the opposite appears true; for an equivalent number of hours of operation, greater stress on components and materials occurs when there are more frequent startups and shutdowns. Thus, the performance of a turbine under continuous operation should meet or exceed that demonstrated by units used in peaking service. This expectation is verified by the maintenance schedules recommended by turbine manufacturers and followed by owners/operators which call for more frequent maintenance based on increased numbers of startups and shutdowns. Available information shows that these schedules are the same for turbines with or without wet controls. Gas turbines used in combined cycles are identical to a simple cycle turbine. The mechanisms which produce NO_x, i.e., high temperature combustion, are identical in simple and combined cycle turbines and wet controls effectively reduce NO_x in each case. The principal difference between the simple cycle and the combined cycle is that in a combined cycle, a heat exchanger is connected by ductwork to the turbine exhaust. The heat exchanger which extracts heat from the turbine exhaust to produce steam, may be associated with a single turbine or may service multiple turbines through a manifold system. The heat exchanger may be located immediately adjacent to or in line with the turbine, or it may be remote. In most, if not all, cases there would be provision to bypass the turbine exhaust directly to the atmosphere. In any case, the presence or absence of a heat exchanger does not affect emissions from the turbine, or turbine controls or control costs.

Contrary to the petitioners' contention, the record and available information show that there are no special problems associated with the combined cycle nor with its use in connection with industrial processes. Rather, the combined cycle, due to its greater efficiency, results in a lower cost impact for a given energy demand, and as noted previously, it is particularly suited to the use of steam injection. Therefore, the Administrator finds no basis for concluding that a combined cycle unit should be exempted from the standard or otherwise subject to a standard which would not require wet control systems. Finally, there is no merit in the petitioners' argument that a combined cycle gas turbine is not a stationary source under Section 111 of the Act.

It is the Administrator's conclusion that the petitioners have neither provided new information nor identified any faults in the analysis or the data base which are of central relevance to the outcome of the standard. The Administrator is therefore denying the petitioners' request that the new source performance standard for stationary gas turbines be revised.

EPA's Position on Petition Issues

The following sections describe in more detail the Agency's response to the various issues raised by the petitioners.

I. Industrial Combined Cycle Gas Turbines

Petitioners' Claim

The petitioners contend that the Agency did not completely consider the characteristics of industrial combined cycles using gas turbines.

EPA Response

The Agency did consider the characteristics of industrial combined cycle units during the development of this New Source Performance Standard (NSPS). The Clean Air Act (Section 111) defines a standard of performance as reflecting:

"the degree of emission reduction achievable through the application of the best system of continuous emission reduction which (taking into consideration the cost of achieving such emission reduction, and any non-air quality health and environmental impact and energy requirements) the Administrator determines has been adequately demonstrated."

Taking into account the impacts mentioned above, the Administrator has determined that the best system for controlling NO_x emmissions from stationary gas turbines is wet control (water or steam injection). During the process of determining the impacts of using water or steam injection in a gas turbine, the effect on these impacts of adding heat recovery units (boilers, etc.) to a gas turbine were investigated. It was found that the impacts did not change as a result of adding the heat recovery units and, therefore, wet control was determined to be the best system of control for combined cycle gas turbines as well as simple cycle gas turbines (SSEIS, Vol. I, p. 7-5).

The Agency was aware that combined cycle units are used in continuous operation to supply electricity and steam to some manufacturing plants and utilities. These units were investigated to determine if there were unique problems associated with a combined cycle unit or with continuous operation that would prevent or make unreasonable the implementation of the gas turbine NSPS on a gas turbine operating as part of a combined cycle unit in industrial applications.

The combined cycle gas turbine is a simple cycle gas turbine which recovers waste heat from the turbine exhaust gases by means of a waste heat recovery boiler (SSEIS-I: pp. 3-42 and 3-44). The simple cycle gas turbine is often installed first and the waste heat recovery boiler added later (II-I-084, pp. 5-6). Mass emissions from gas turbines of the same model used in the simple cycle and combined cycle configurations are equivalent (SSEIS-I, p. 3-45).

The Agency, to characterize better the range of potential impacts, analyzed a series of model plants which are typical of existing installations (SSEIS, Vol. I, Chapter 7). The Agency analyzed a 3 MW model plant with an industrial application and assumed continuous operation (Standards Support and Environmental Impact Statement (SSEIS), Volume I, p. 7-62). The Agency also analyzed a model plant with a 66 MW continuously operating combined cycle utility turbine (SSEIS, Volume I, p. 7-63). A turbine used in a utility combined cycle unit is the same turbine as one used in an industrial application and the impacts associated with this utility model are the same for an industrial turbine of the same size and mode of operation.

As noted, the Agency has considered problems peculiar to both the industrial setting and to large continuously

operated combined cycle gas turbines. The Agency also developed several other models for different sized turbines in other uses, such as pipeline and standby, in an effort to take into account all the major variables associated with gas turbines such as size, type, use and mode of operation (SSEIS, Vol. I, pp. 7–2 through 7–6). If technological problems or unreasonable impacts had been found for combined cycle turbines or any other type of turbine, a separate standard would have been set. However, no unique technological problems or unreasonable impacts were found. As a confirmation, one turbine manufacturer specifically stated that a single standard of performance for gaseous pollutants could be applied to gas turbines in both simple and combined cycle application (II–D–144). The Agency also found no unreasonable impacts associated with industrial applications (see discussion below). Therefore, the Agency finds no reason why large continuously operated combined cycle industrial gas turbines should be considered a special case; nor is there any reason why the 66 MW model is not representative of a large continuously operated combined cycle industrial gas turbine.

Petitioners' Claim

The petitioners also suggested that the efficiency of the combined cycle unit be used in establishing the NO_x emission limit rather than using the efficiency of the gas turbine only because the efficiency of the unit is higher than that of the turbine.

EPA Response

An efficiency correction factor was included in the NSPS to allow the NO_x emission limit to the adjusted upward as the efficiency of the gas turbine increased. This was done because data showed that as the efficiency of the gas turbine increased, the NO_x emissions from the gas turbine also increase. If an efficiency correction factor were not included, it would be possible for a high efficiency turbine not to meet the NO_x emission limit even when using what was determined to be the best control system to control NO_x emissions. The efficiency correction factor was included in the standard to ensure the application of the best system of control for the reduction of NO_x from gas turbines.

In contrast, the greater efficiency of a combined cycle unit is the result of recovering heat from the turbine exhaust gas by ducting the turbine exhaust to a heat exchanger. This does not, however, affect the NO_x emissions from the gas turbine. Therefore, a NO_x emission limit corrected for the efficiency of the entire combined cycle unit would not reflect the best system of control for the reduction of NO_x from gas turbines. As pointed out previously, this is not what the Clean Air Act requires.

Petitioners' Claim

Petitioners argue that turbines that are included in combined-cycle units are not "stationary sources" and therefore cannot be regulated under Section 111 of the Act. Petitioners note that in a combined-cycle unit, the pollutant-laden exhaust gases from the turbine pass through a heat recovery unit before existing to the atomsphere. They therefore conclude that the turbine does not "emit" any air pollutants, and is therefore not a "stationary source" for the purposes of Section 111.[7] Consequently, they conclude, the Agency may not establish performance standards for such turbines under Section 111.

EPA Response

The petitioners' argument is frivolous. Section 111 requires the Administrator to list and establish standards for each category of stationary sources that *"causes,* or *contributes* significantly to air pollution which may reasonably be anticipated to endanger public health or welfare." Sections 111 (b)(1)(A) and (f)(1) (emphasis added). Congress expressly recognized that the pollution caused by stationary sources would generally not be emitted directly into the air, but rather would be emitted through various conveyances such as ducts, stacks, and the like. Section 111(h)(2). Petitioners' argument would lead to the absurd result that no facility using a stack could be regulated as a stationary source, a result Congress hardly could have intended.[8]

In this case, a turbine that is part of a combined-cycle unit produces sulfur dioxide and nitrogen oxides. Sulfur dioxide and nitrogen oxides are produced *in the turbine* by the combustion of fuel. The system of emission reduction on which the standard is based (water or steam injection for NO_x) is applied *to the turbine.* In short, the turbine is clearly the source of the pollutants emitted into the air; the fact that these pollutants pass through a heat recovery unit on their way to the atmosphere is of no legal significance.[9]

Petitioners' Claim

The petitioners also stated that EPA underestimated the fuel penalty and fuel costs associated with this standard since the cost of fuel has increased substantially in the last couple of years.

EPA estimated the energy impact of the NSPS by assuming all gas turbines covered by the standard would have to meet the standard by injecting water at 1:1 water-to-fuel ratio (SSEIS, Volume I, pp. 6–41 through 43). Most gas turbines can meet the standard by injecting less water than this (from 0.5:1 to about 0.8:1). SSEIS, Vol. I, p. 4–25. This will result in less of a fuel penalty than the Agency estimated.

The original EPA fuel cost estimates were based on an energy cost of $2.18 per million Btu (SSEIS, Volume I, p. 7–60). For a 25 MW continuously operated simple cycle turbine the estimated fuel cost increase resulting from water injection was calculated to be $212,000 which represents a 4 percent fuel cost increase. The Agency considered this to be a reasonable fuel cost impact.

The petitioners are correct that fuel costs and, for that matter, total system operating costs have increased. At today's energy costs of approximately $6.17 per million Btu, the estimated fuel cost increase associated with water injection at the same 25-MW turbine would be approximately $614,000. However, this remains a 4-percent increase and is in direct proportion to the total fuel costs which have increased from approximately $5.8 to $16.2 million. The Agency still considers the 4-percent fuel cost to be a reasonable impact.

As noted eariler, the above fuel penalty impacts are calculated on a worst case basis by assuming a very high water-to-fuel ratio. These calculations also assumed that water injection, which has a greater fuel penalty than steam injection, would be used in all cases when in fact steam injection which can increase gas turbine efficiency will be used in some cases to meet the standard (SSEIS, Volume I, p. 4–36), and steam injection is particularly suitable for industrial combined cycles.

Finally, if the development of dry control technology, which will be

[7] Section 111(a)(3) provides:

The term "stationary source" means any building, structure, facility or installation which emits or may emit any air pollutant.

[8] Congress specifically contemplated that facilities at power plants and steel mills, for example, would be regulated as stationary sources. H.R. Rept. 91–1196, 91st Cong., 2d Sess. (1970) at 416. Congress was certainly aware that such facilities typcially emit air pollutants through a variety of devices and conveyances, including ducts or stacks, pollution control devices, and enclosing structures.

[9] Petitioners claim that their argument is supported by the definition of "air pollutant" in Section 302(g) as including a substance which is "emitted into or otherwise enters the ambient air." However, as noted above, Congress expressly recognized that these substances are generally not emitted directly into the air from the device producing the pollution, but instead first pass through ducts, stacks and similar conveyances.

discussed later, proceeds as expected the energy impact of this NSPS will decrease since available data indicate dry controls will have a smaller fuel impact than wet controls. Also, since the NO_x reduction achieved by wet and dry controls are cumulative (SSEIS, Volume I, p 4-90) it will be possible to decrease the amount to water used to meet the standard as the amount of reduction achieved by dry controls increases. The use of dry controls, however, will have the greatest impact on the overall reduction of energy impact of the NSPS after 1983 when it is expected that more and more gas turbine will begin using dry controls alone to meet the standard. In summary, while the absolute costs have increased due to fuel price escalation, the cost impact of wet controls has not changed in proportion to the total fuel costs associated with turbine operation. The Agency has concluded that these costs are reasonable, even under worst case conditions.

Petitioners' Claim

A related comment pertaining to fuel impacts was the petitioners' questioning of EPA's assumption that the majority of the fuel impact over the next five years associated with this NSPS would be incurred by gas turbines operated at utilities.

EPA Response

This was considered a correct assumption, because even though industrial turbines generally operate more hours per year than utility turbines, utility turbines account for the vast majority of turbine horsepower sold (about 90 percent). However, the Agency does recognize that there are many factors which are not totally predictable which influence both utility and industrial energy decisions, particularly with today's changing fuel prices. Thus it is possible that industrial turbine demand may increase. However, this would not invalidate the Agency's analysis which assessed impacts both on the basis of individual industrial and utility model turbines as well as national estimated usage. The Agency found that the impacts were reasonable for continuously operated turbines (SSEIS, Vol. I, Chapter 7).

Petitioners' Claim

Another claim by the petitioners concerned the possibility that EPA failed to understand that an industrial combined cycle is integrated into an entire industrial complex and, therefore, seriously underestimated operating costs, principally those resulting from shutdowns.

EPA Response

This issue, which has both technical and economic implications, is discussed more fully later when the issue of the impact of water injection on gas turbine maintenance is addressed. Basically, however, the Agency does understand the importance of a combined cycle gas turbine to the power requirements of an industrial complex. However, industrial dependence on gas turbines and the costs and economic consequences of downtime are not relevant unless the emission reduction system were to increase downtime beyond that associated with an uncontrolled turbine; the record shows that the gas turbine NSPS will not have an adverse impact on the operating costs or periods of shutdowns associated with an industrial combined cycle gas turbine.

Petitioners' Claim

The petitioners also contend that NO_x emissions from industrial combined cycles are an insignificant part of total manmade NO_x, and therefore, any curtailment of NO_x emissions from industrial combined cycles achieved by the standards will be negligible.

EPA Response

As described in detail in the preamble to the proposed regulation (44 FR 53783, October 3, 1977), stationary gas turbines emit approximately 2.5 percent of the total NO_x emissions from stationary sources. NO_x have been shown to worsen asthma and increase susceptibility to pneumonia. In addition, they contribute to the formation of ozone, which also has adverse health effects. The difficulty in reducing NO_x emissions is that large reductions cannot be obtained from most stationary sources because of a lack of effective control technology. In fact, even with the implementation of all existing and anticipated regulations to control NO_x emissions, total national NO_x emissions are expected to continue to increase in the future. Unlike most sources, however, NO_x can be reduced substantially from stationary gas turbines. The use of wet controls can achieve an overall NO_x emissions reduction from stationary gas turbines or about 70 percent of about 190,000 tons of NO_x by 1982. For those reasons, an NSPS for stationary gas turbines was given high priority.

The majority of the NO_x emissions and, therefore, the majority of the reduction of NO_x emissions is estimated to occur at utilities whose turbines account for about 90 percent of gas turbine horsepower. However, industrial gas turbines are included in this standard for several reasons. First, these turbines are sometimes quite large (>50 MW) and operate more or less continuously. This would result in significant NO_x emissions for individual turbines. Second, wet controls, which have been determined to be the best control system, are equally applicable to utility and industrial simple and combined cycle gas turbines. Third, there have been no technological or economic reasons identified for excluding industrial combined cycle turbiens from the NSPS. Finally, as the petitioners note, since the fuel efficiency of industrial combined cycle units is high and the price of fuel is increasing, it is possible that the combined cycle unit share of the gas turbine market will increase in the future, thus increasing the NO_x contribution of industrial combined cycle turbines. In this regard, the petitioners' statements further support the need for a standard. From all standpoints, it was appropriate to continue to include them in the NSPS.

II. Demonstration of Wet Controls

Petitioners' Claim

The petitioners have stated that experience with wet controls has been far less extensive than the Agency suggests; furthermore, successful application of wet controls to modern large gas turbines has not yet been demonstrated.

EPA Response

Table 4-2 (page 4-28) in the Standard Support and Environmental Impact Statement, Volume I lists gas turbines equipped with wet controls and the number of hours the turbines had operated at the time the standard was being developed. The data in this table were obtained for the most part from manufacturers who stated that the turbines they had sold with wet controls were in fact being operated with the wet control systems operating and until recently, EPA had no basis for assuming this was not correct. However, as a result of questions by the petitioners, the Agency contacted all users identified in Table 4-2 who had actual wet control experience, to evaluate and as appropriate, to update the data base on turbiens operating with wet controls. As a result, EPA discovered that some of the turbines listed in this table equipped with water injection had been operated without the control systems being turned on because there were no regulations requiring their use. However, it was also found that additional experience has been gained with wet controls and the total data base is

greater than that which existed during development of the standard.

With respect to Table 4.2, the overstatement does not invalidate the case for wet controls. Of the more than 187,000 hours stated in the table as being hours of wet control experience, 175,000 hours (94 percent) is actual operation of wet control systems (Table1).

Table 1.—*Revised Table 4.2 (SSEIS, Vol. I—Pages 4-28)*

User	Manufacturer	Turbine description No. (type)	Operating history	Type of control
San Diego Gas and Electric	General Electric	17 (frame 5)	1,000 hours/unit	Water injection.
	General Electric	1 (frame 5)	17,850 hours	Water injection.
Union Carbide	Westinghouse	1 (191G)	3,000 hours	Steam injection for power augmentation.
	General Electric	1 (frame 3)	15 years	Steam injection for power augmentation.
Exxon	General Electric	3 (frame 3)	48,000 hours on one turbine. Operating hours on 6 others unknown.	Steam injection for power augmentation.
	General Electric	2 (frame 5)		
	Westinghouse	2 (4MW)		

These numbers include the approximately 150,000 hours of steam injection for power augmentation experience of Union Carbide and Exxon. It was the Agency's judgment that operating experience with steam injection for power augmentation can be used to determine the feasibility of steam injection for NO_x reduction since in both steam is involved in the combustion and passes through all turbine elements downstream of the combuster including the turbine blades (II-I-172). The hours of steam injection for power augmentation are therefore considered a valid part of the data base used to assess turbine performance with wet controls. Additional data on wet controls obtained by EPA since promulgation of the standard is described as follows (Table 2):

San Diego Gas and Electric (SDGE) was contacted and it was learned that they operate two General Electric (GE) frame 5 turbines (18 to 23 MW) with water injection for NO_x reduction, one of which was installed in 1970 and the other in 1972, that have operated a total of about 25,000 hours since installation. SDG&E also installed a 32-MW Turbo Power and Marine turbine in 1976 that has averaged 7,000 hours per year with steam injection for NO_x reduction since 1978. These three turbines alone have accumulated over 40,000 total hours of water and steam injection (VI-B-27b). SDG&E also has fifteen other gas turbines all of which have been using water injection for NO_x reduction since 1972.

Table 2.—*Updated Operating Experience With Gas Turbines and Wet Controls*

User and manufacturer	Turbine description No. (type)	Year installed	Operating history	Type of control
San Diego Gas & Electric:				
General Electric	1 (18-MW frame 5)	1970	25,000 hours since 1976	Water injection.
General Electric	1 (23-MW frame 5)	1972	25,000 hours since 1976	Water injection.
Turbo Power & Marine	1 (32-MW)	1976	6,000-8,000 hours per year in 1978 and 1979	Steam injection.
General Electric	15 (frame 5)	1972	Approximately 17,000 hours since 1975	Water injection.
Houston Light & Power:				
General Electric	8 (50-MW frame 7B)	1974	Approximately 55,000 hours total	Water injection.
General Electric	6 (50-MW frame 7C)	1975	500 hours (total)	Water injection.
Southern California Edison:				
Turbo Power & Marine	2 (25-MW)	1974	Less than 100 hours per year	Water injection.
Turbodyne	7 (60-MW)	1976-1977	2,000-3,000 hours per year (total of 60,000 hours)	Steam injection.
Westinghouse	4 (60-MW)	1978	3,000-4,000 hours per year	Water injection.
New Mexico Electric Service:				
Westinghouse	1 (66-MW)	1977	500 hours per year	Water injection.

These turbines have accumulated over 17,000 hours of operation with water injection. Compliance data for the nine turbines at SDG&E's Kearney installation show that they are meeting the NSPS (corrected to 15 percent oxygen) with water-to-fuel ratios of between 0.2:1 to 0.4:1 (VI-B-13).

Southern California Edison (SCE) operates four Westinghouse 60 MW gas turbines installed in 1978 that use water injection for NO_x control. Each has accumulated about 3000 hours per year of water injection use. SCE also installed four MW Turbodyne gas turbines in 1976 and three 60 MW Turbodyne gas turbines in 1977, all equipped with steam injection for NO_x control (VI-B-27d). These turbines operate about 2,000 to 3,000 hours each per year and have accumulated total of approximately 60,000 hours of steam injection operation.

New Mexico Electric Service installed a Westinghouse 66 MW peaking unit in 1977 that has operated about 500 hours per year with water injection for NO_x control (VI-B-22f). Houston Light and Power has operated approximately 55,000 total hours using water injection for NO_x control on eight GE model MS-7001B gas turbines at their T. H. Wharton combined cycle installation (IV-D-088 and VI-B-22).

In summary, even though it has been learned that the original citation of

hours of water injection experience was incorrectly stated, there was ample experience available to show demonstration of water (or steam) injection as an effective means of controlling NO_x emissions from stationary gas turbines at the time of proposal. Morever, since promulgation additional experience has been gained in the use of water and steam injection that further illustrates that wet controls are adequately demonstrated.

Petitioners' Claim

Another issue put forth by the petitioners concerns the applicability of data obtained from small (< 50 MW) non-continuously running utility gas turbines to large (< 50 MW) continuously running industrial gas turbines.

EPA Response

Utility gas turbines are the same in design as industrial gas turbines; in fact in many cases the same model turbine is sold for both uses (II-D-149, II-D-156 and II-D-144). Also, the designs for all sizes of turbines (< 50 MW) are essentially the same, except that large turbines (< 50 MW) may have heavier duty components due to their size.

There is a difference, however, in the operating modes of utility and industrial turbines. Utility turbines are often used to meet varying load requirements. Combined cycle industrial turbines are usually operated in a continuous mode. Of the two modes, the more demanding is for peaking or intermittent use because startup and shutdown produces temperature variations and resulting stress on turbine components. Peaking units which have hundreds of startups per year as compared to one or two for continuous operating turbines are operated in a much more taxing mode than continuously operating gas turbines (IV-D-075). Accordingly (as described under "Reliability and Maintenance"), more frequent maintenance is specified for peaking turbines by the manufacturers.

Consequently, the Agency concluded that since gas turbines being used at utilities and in industrial applications are essentially the same, and since wet controls had been demonstrated in worst-case situations involving hundreds of startup and shutdowns, the data obtained from utility gas turbines to show demonstration of wet controls could also be used as a basis for showing demonstration on industrial gas turbines.

III. Reliability and Maintenance

Petitioners' Claim

The petitioners have stated in their submissions that users of gas turbines actually operating with wet controls have expercienced more serious problems than suggested by the Agency. This comment actually covers several concerns of the petitioners, the most important of which is the contention that utility turbines have experienced operating problems associated with water injection and that the impact of these problems will be magnified by continuous operation such as that experienced by industrial gas turbines. Specifically, it is contended that these operating problems will increase the downtime of the plant for which the turbine supplies power. It is further contended that the Agency did not take these problems into account and therefore has underestimated the maintenance and operating costs associated with the use of water injection on industrial gas turbines.

EPA Response

During the development of the stationary gas turbine NSPS the Agency took careful steps to investigate adverse impacts associated with wet controls (water or steam injection) (SSEIS Volume I. Chapters 4, 5, 6, 7). Prior to proposal of the standard in 1977 the Agency specifically requested information from turbine manufacturers concerning the prescribed maintenance for gas turbines not using wet controls as compared to those equipped with wet controls. The responses indicated that turbines equipped with wet controls had performed well. General Electric for example, stated that steam injection did not appear to affect turbine life (SSEIS, Volume I, p 4-24 and 4-26). They also stated that the recommended maintenance requirements (inspection periods, overhaul schedules, etc.) were the same for turbines equipped with and without wet controls (II-D-144).

During the public comment period following proposal of this standard several commenters brought up this issue of a possible maintenance increase as a result of wet controls (IV-D-17, 36, 44, 54, 60, 63). To assure further that this issue was fully analyzed, the Agency sent telegrams (IV-C-002, 002a, 003, 004) to several of these commenters and to turbine manufacturers requesting relevant information and data. The responses stated that there was no indication of increased maintenance. There had been some problems attributable to the water or steam injection systems. However, these problems had been confined to initial periods of operation of these systems. Gas turbines with or without wet controls have more maintenance and downtime during the initial startup period generally because as with any sophisticated technology there are operational procedures to learn and minor equipment adjustments to make (VI-B-336). These reported problems, such as turbine blade damage, flame-outs, water hammer damage and ignition problems, were corrected by minor redesign of the equipment hardware. The record shows that EPA considered these problems and concluded that any gas turbine operating with a properly operated and designed wet control system would not have abnormal problems (SSEIS, Vol. II, p. 2-12 and 2-13).

One response from Southern California Edison outlines problems that had occurred during startup of their wet control system (steam injection) but also stated that several of their problems had already been solved and that they expected to resolve the others within the first year of operation (V-D-085). (This expectation was confirmed as discussed below).

Another comment on the proposed standard was submitted by the Exxon Chemical Company (IV-D-55, 80). They had no experience with water injection for NO_x reduction but expressed concern that continuous operation of an industrial gas turbine equipped with wet controls could increase downtime of the turbine due to solids deposit or poor distribution of water leading to flameouts or blade deterioration. EPA analyzed these possible problems during the development of the NSPS and concluded that neither should occur if the water is treated properly (prevents deposits) and if the wet control system is designed properly (prevents poor water distribution) (SSEIS, Vol. I, pp. 4-26 through 4-34). As discussed in the record, both treatment systems and wet control systems have been demonstrated and are economically reasonable.

The Agency also received from Exxon, in several pre-proposal contacts, information that long term injection of steam will not impact on maintenance. In a February 15, 1973, meeting (II-E-032), Exxon described seven combined cycle continuously operating gas turbines operating with steam injection for power augmentation at their Baytown facility and stated they had experienced no problems with steam injection on any of their turbines. Steam injection for power augmentation is similar as stated earlier to steam injection for NO_x reduction and gives a

good indication of the impact of wet controls on gas turbine maintenance.

Clearly, the foregoing record shows that the Agency did investigate the possibility of maintenance problem during the development of the NSPS and that the findings supported the conclusion that wet control systems would have no impact on the maintenance requirements or downtime of gas turbines.

The petitioners cited several instances of utility gas turbines using water injection and experiencing problems such as vibration, fatigue, explosions and deposition of water borne chemicals. The following summarizes these instances and what the Agency has learned through recent contact with vendors or owners of these turbines.

Petitioners' Claim

It was stated in the petitioners' submission of February 25, 1980, that BBT (Brown-Boveri) will not sell a 75 MW turbine with water injection because BBT has found water injection causes severe vibration and audible rumble.

EPA Response

BBT stated, during the Agency's investigation, that they had been misquoted in the February 25 memorandum submitted to EPA by the petitioners. BBT stated that they would sell water injection on gas fired gas turbines but would prefer to sell steam injection on oil-fired gas turbines because although combustor rumble in their oil-fired turbine has been reduced to an acceptable level, high rates of water injection are required to meet the NSPS and this decreases the efficiency of their turbine. BBT stated that for this reason their customers preferred steam injection which does not have the efficiency penalty (VI-B-22). BBT also stated that with steam injection BBT turbines have no detectable vibration and that several BBT turbines with steam injection have run 10,000 to 12,000 hours without any problems (VI-B-30). The Agency also contacted Southern California Edison to obtain an update on their seven BBT combined cycle turbines operating with steam injection and learned they had been operating a total of 60,000 hours with no control system related problems.

It is the Agency's conclusion from these statements that BBT can meet the standard with water injection but would prefer steam injection in certain cases. The efficiency penalty mentioned by BBT has been discussed previously and the impact of this penalty was taken into account by EPA during the development of this standard and was determined to be a reasonable impact.

Petitioners' Claim

The petitioners pointed out that Houston Lighting and Power (HLP) have experienced transition piece failure on six G.E. Frame 7C machines using water injection.

EPA Response

The Agency was aware of this circumstance during the original rulemaking as a result of a March 3, 1978 reply to a telegram sent to Houston Lighting and Power following proposal. The letter stated that HLP has six General Electric Model MS7001C simple cycle gas turbines equipped to use water injection for NO_x control. Water injection had been discontinued on these turbines at the recommendation of General Electric until combustion related problems with the turbines could be resolved. These combustion process problems have been linked to pulsations in the turbine which have led to transition piece failure. The letter also stated that there is an indication that the water injection may aggravate the pulsation problem in this turbine design and that GE was pursuing several programs of both a field and laboratory nature (II-D-88). It was the Agency's conclusion, that although the water injection may have aggravated the combustion pulsations the problem originates in the gas turbine rather than the water injection system.

This conclusion is further supported by the HLP letter which states that at another HLP installation where eight G.E. Frame 7B turbines are operating as combined cycles with water injection, water injection has caused no special maintenance problems. From that letter of March 3, 1978:

"One of the operating installations is the T. H. Wharton Combined Cycle installation which is composed of two General Electric 'Stag' combined cycle plants. Each combined cycle unit consists of four G.E. Model MS-7001B gas turbines, four heat recovery steam generators (HRSG's) and one 100 MW steam turbine. The combined cycle gas turbines may be operated in the simple cycle mode without associated steam generation in the HRSG's. Fuel for this installation is either natural gas or No. 2 distillate fuel. Maintenance requirements specified by General Electric, and followed by Houston Lighting and Power, for this installation are essentially identical to what would be required for a similar machine not using water injection. No particular operating or maintenance requirements are attributable to the use of water injection with these machines."

The Agency subsequently as a result of the petitioners' comment, recently contacted Jacksonville Electric and Kansas Power and Light (KPL), utilities operating the same G.E. Frame 7 turbines as HLP *without* water injection. Jacksonville Electric and KPL reported that their turbines had experienced combustor transition piece failure which is the same problem HLP experienced (VI-B-22c,d). Since Jacksonville Electric and KPL are not injecting water, this further confirms the Agency's conclusion that the problem experienced by HLP is due to turbine design, not to water injection. HLP's judgment also is that the pulsation and fatigue problems originated in the gas turbine and not in the water injection system (VI-B-22).

Finally in regard to G.E. model MS-7001 turbines, as a result of a telegram sent by the Agency following proposal to G.E., it was learned that G.E. now has for commercial sale the MS-7001E machine which was specifically designed to be responsive to the NSPS. This is a new model and, according to G.E. the MS-7001E requires minimal amounts of water to be injected to meet the NSPS NO_x limits (IV-D-081). Therefore not only does G.E. have a turbine to meet the standard with minimal water injection, but it is also G.E.'s judgement that they have corrected the vibration problem inherent in one of their earlier model frame 7 turbines by thickening the transition piece (VI-B-31).

Petitioners' Claim

The petitioners also pointed out that Southern California Edison (SCE) has experienced transition piece failures due to vibration at two Westinghouse 501-B turbines using water injection.

EPA Response

Although even according to the petitioners the failures were not attributed to water injection, EPA contacted SCE to determine what had occurred and learned that Westinghouse has redesigned the transition piece, alleviating the problem.

Petitioners' Claim

The petitioners stated that Northern Indiana Public Service Company (NIPSCO) has two Westinghouse 501-D gas turbines used for peaking which have experienced water control and flameout problems as well as problems with abnormal temperature differential across the flame path.

EPA Response

In contacting NIPSCO, EPA learned that these problems were due to a poorly designed water injection system and that the system had been improved and the problems solved (VI-B-35).

In summary, the problems encountered by gas turbines using water injection have been caused by the poor water injection systems design or by a design problem within the turbine itself. Redesigns have corrected the problems encountered. In the case of the BBT turbine they prefer the use of steam injection which can also be used to meet the standard. EPA is aware of no instances or claims of any problems associated with steam injection during normal operation. In this regard, steam injection would be an especially viable approach for combined cycle units since steam of the proper quality is readily available from the boiler for injection into the gas turbine (SSEIS Vol. 3, p. 4-26, VI-B-38). It is the Agency's judgment that either water or steam injection can be used by any gas turbine to comply with the NSPS and at the same time maintain the same maintenance schedule as would be maintained if the turbine had no wet control system.

Petitioners' Claim

Another issue closely related to the maintenance issue concerns the petitioners statement that some serious accidents have occurred with gas turbines using wet controls. (The petitioners listed accidents occurring at San Diego Gas and Electric, Braintree Electric, Southern California Edison and Houston Light and Power.)

EPA Response

The Agency was aware of the accidents at San Diego Gas and Electric as a result of a reply to a telegram sent following the public comment period (IV-D-083). One accident occurred when condensate surged into the turbine and damaged the first stage turbine blades. Since this accident, a steam trap was installed and there was no recurrence of the problem. Also, a malfunction of a steam control valve caused a flameout, which resulted in fuel flowing directly to a heat recovery boiler and exploding. Since the explosion, a flame monitoring system was added to the system to prevent a recurrence.

Another explosion occurred in a Turbodyne combined cycle unit at Braintree Electric following a flameout. EPA's investigation revealed that the problem has been corrected by improving startup procedures and installing a flame detection and fuel control system to prevent reignition (VI-B-27b). The problems at SCE and HLP were discussed earlier.

The Agency concluded at promulgation that a properly designed and operated wet control system will not have these accidents (SSEIS, Vol. II, pp 2-12 thru 2-13). The accidents that have occurred at these gas turbines were isolated incidents due to malfunction or poor design of the system or to poor operation of the system. The problems have been corrected by redesign of the turbine or improved design of the wet control system. As with any high-technology system, such as a gas turbine, operator error and design failures can occur. The incidents described above do not show that a gas turbine can not be operated normally with water injection. The additional data cited by the petitioners do not cast any doubt on that conclusion.

Petitioners' Claim

Another comment by the petitioners stated that the time period between routine maintenance and inspection at water injection turbines is significantly shorter than normally expected.

EPA Response

This comment could be interpreted to mean that the use of water injection on utility turbines has shortened the required maintenance inspection periods or it could mean that the normal inspection periods of utility turbines are shorter than for industrial turbines. Response to both interpretations of this comment are given below.

First, no owner of a gas turbine using a properly designed and operated water injection system to control NO_x has indicated that the use of the water injection system has caused them to shorten their maintenance or inspection periods. also, vendors have indicated that they sell gas turbines with water injection with the same recommended maintenance and inspection programs as for gas turbines not using water injection. therefore, there is no reason to believe that water injection will shorten a gas turbine maintenance or inspection period.

Second, it appears true from EPA's contact with utilities and from statements made in the petitioner's submissions that gas turbines used for peaking service at utilities are inspected more often than continuously running industrial turbines. This is done, however, for reasons other than because the turbine is using water injection. The Agency's investigation revealed that the intervals between inspection of turbines are generally based on the ratio of startups to firing hours. This means of determining inspection intervals is recommended by the manufacturers. The basis for this recommendation, according to G.E., is that startup is the most taxing mode of operation for a gas turbine and the more startups a gas turbine makes the greater the possibility that some type of maintenance will be necessary (VI-B-22f,n). A continuously running industrial gas turbine might have only one or fewer startups per year and, therefore, should be able to operate for longer periods of time than a peaking unit without inspection or maintenance.

In summary, EPA has concluded that water injection will have no impact on the maintenance and inspection intervals of an industrial gas turbine.

Petitioners' Claim

Another issue related to maintenance concerns the deposition of water borne impurities (sodium, calcium, total dissolved solids, etc.) on turbine blades. The petitioners' contention is that this will be more of a problem for continuous operating gas turbines than for peaking turbines because during the numerous shutdowns of peaking turbines, the water borne deposits will flake off due to the temperature changes.

EPA Response

This could well be a problem if untreated water were used for injection into the gas turbine. The wet control injection system on which the NSPS is based, however, includes the cost of a water treatment system (such as reverse osmosis or deionization) to reduce the impurities in the water that would deposit on the blades (SSEIS Volume I, 4-26 thru 4-34). Most vendors sell their gas turbines and water injection systems with a recommended water quality. Also, there has been no indication of a deposition problem from any of the operators contacted during the Agency's investigation of the possible impact of wet controls on turbine maintenance. All of these facts lead to the conclusion that if the water to be used for injection into a gas turbine for NO_x control is treated properly there will be no unusual deposition buildup.

Consequently, as a result of its investigation of water and steam injection during the development of this NSPS and the additional investigation done as a result of the issues raised by the petitioners the Agency concludes that wet controls will not adversely impact maintenance and reliability of either utility gas turbines or industrial combined cycle gas turbines. It is the Agency's judgement that neither the downtime of an industrial combined cycle unit nor the downtime of the plant

that depends on the combined cycle unit for power will be affected by the use of wet controls for NO_x reduction.

IV. Dry Control Technology

Petitioners' Claim

The petitioners have stated that they believe additional consideration should be given to substantial advances which have been made recently in dry control technology and that dry control technology is best technology for large industrial combined cycle turbines.

EPA Response

The Agency has been aware that dry control is an important emerging technology for reducing NO_x emissions from gas turbines and that advances have been made recently in its development. It appears that dry control technology able to achieve the 75 ppm NO_x emission limit will likely be available by 1983. At least one, and possibly more, gas turbine manufacturers have developmental gas turbines at this time that are withing 10 to 20 ppm of achieving the 75 ppm NO_x emission limit. However, the fact that a developing technology can achieve almost as much reduction as the technology on which the standard is based is not a reason in itself to raise the NO_x emission limit to allow the use of the developing technology.

As proivided in the Clean Air Act, the best emission control technology which can be applied to an emission source with reasonable impacts (economic, energy, environmental) must be selected as the basis for the NSPS. As described in Chapter 4 of the SSEIS Volume I, during the development of this standard, dry controls could only achieve about 60 percent of the reduction of water injection (40 percent reduction vs 70 percent reduction) which would mean a reduction of 115,000 tons of NO_x per year in the fifth year of the standard rather than 190,000 tons. Even if dry control methods had been demonstrated to achieve the levels stated by the petitioners (60 percent reduction), and it is the agency's judgment that they have not, the difference in emissions between dry and wet controls still represents about 200 tons per year by a 60 Mw turbine operating 8000 hours per year. The difference alone would qualify this turbine as a "major stationary source" as defined in Section 302(j) of the Clean Air Act. Also, as stated earlier, the impacts of using wet controls were all investigated and found to be reasonable as applied to large utility and industrial gas turbines. Consequently, it remains the Agency's position that wet controls are the best system of control for the reduction of NO_x from stationary gas turbines. The Agency feels that the recent advances in dry control have been made to a great extent due to the gas turbine NSPS in an effort by the manufacturers to meet the standard with dry controls. If the NO_x emission limit were raised to allow current dry control technology to be used to meet the standard, this would take away the incentive for further dry control development.

V. Synthetic Fuels

Petitioners' Claim

The petitioners have stated that EPA's justification for imposing an absolute limit on NO_x from fuel bound nitrogen, namely that fuels with the higher nitrogen contents can be combusted in other devices, is not adequate because no other device has the efficiency factor to justify the burning of expensive synthetic fuels. They have also stated that synthetic fuels can best be used with dry control technology on combined cycle turbines.

The petitioners have not provided any information concerning which synthetic fuels they believe will be used or might be promoted for use in gas turbines. Furthermore, the petitioners do not clearly state whether the alleged impact would be on turbine owners, on energy suppliers, or as they suggest, on the nation's energy program; nor do they describe what the nature of these impacts may be.

EPA Response

Total NO_x emissions from any combustion source including gas turbines are comprised of thermal NO_x (formed from nitrogen in the air) and organic NO_x (formed from nitrogen in the fuel). Wet controls will reduce thermal NO_x but will not reduce organic NO_x. For this reason, some high nitrogen content synthetic fuels may in effect be precluded from use in gas turbines by the standard.

At the present time the only synthetic fuels commercially available for potential use in gas turbines are coal derived gases. These fuels, which are low in nitrogen content, may be a desirable turbine fuel and gas turbines firing them could comply with the NSPS using wet controls (SSEIS, Vol. I, p 3-93).

There are also synthetic coal derived liquid fuels being developed. These may be commercially available in limited quantities in 5 to 10 years. Coal derived liquid fuels could have high nitrogen content and thus the NSPS could in effect limit their use in gas turbines. However, there is no information that coal derived liquids would be preferred or selected for firing in gas turbines even in the absence of a standard. In fact, it may be difficult to fire these fuels in gas turbines because gas turbines are not very tolerant of the impurities (nitrogen, ash, metals) that will probably be contained in these fuels.

The Agency, however, considered during the development of the standard the possible impacts of limiting high nitrogen synthetic fuels for use in gas turbines. The Agency concluded that low nitrogen gaseous and/or liquid fuels are an appropriate available technology for limiting NO_x emissions which would otherwise result from combustion of fuels with high organically bound nitrogen in gas turbines.[10] High nitrogen synthetic fuels could be fired in other combustion devices such as boilers where reductions of organic NO_x of 30 to 50 percent can be obtained (SSEIS, Vol. II, pp 3-24 thru 2-27). This would lead to a positive environmental impact and have no adverse energy or economic impacts.

The petitioners, however, now imply that there will be an adverse economic impact associated with the precluding of high nitrogen synthetic fuels (presumably coal derived liquid fuel) for use in combined cycle gas turbines because of the high efficiency of the combined cycle gas turbine as compared to the efficiency of other devices. They state that these fuels will be more costly than other fuels and suggest that these fuels would not be burned in other devices. This further implies that turbine operators would select higher cost liquid fuels whereas other fuel users would only select lower cost fuels. EPA is aware of no basis for such a claim. Rather, owners or operators of fuel combustion devices, i.e., turbines or other devices, can be expected to select the least cost fuel available. In this regard, turbine operators would compete in the market place for available gaseous and liquid fuels (if latter are, in fact, desired for turbine use) and would not preferentially select a higher cost liquid syn-fuel. Thus, the standard will not impact turbine owners or operators unless liquid high nitrogen syn-fuels become available at a lower cost than other liquid or gaseous turbine fuels. In EPA's judgment this will not occur and the petitioners do not offer any evidence it will occur.

The Agency does not understand what the petitioners mean when they state that the standard is contrary to the

[10] Section 111(a)(7) specifically provides that the technological system of continuous emission reduction in which an NSPS is based may include an inerently low polluting process (such as the use of lower nitrogen fuels).

nation's energy program. The demand for synthetic liquid fuels in brought about by the need to replace decreasing energy supplies. In the Agency's judgment, the demand for liquid synthetic fuels and the motivation for their development will not be significantly impeded if they are not fired in gas turbines, because gas turbines form a small part of the total market for liquid fossil fuels.

Since the petitioners have provided EPA no information which indicates that the Agency's original conclusion concerning the energy and economic impacts of precluding high nitrogen synthetic fuels in gas turbines is incorrect, the NSPS is not being revised.

The Clean Air Act, however, requires under Section 111(b)(1)(B) that each NSPS be reviewed and, if appropriate, revised at least every four years. The Agency during the next review of this NSPS will review the fuel supply situation relating to gas turbines and investigate any new data concerning nitrogen content and availability of synthetic fuels. Also, since dry controls that can comply with the standard may be available by 1983, which is well in advance of when the high nitrogen liquid synthetic fuels will be available, the Agency will review any new data relating to the reduction of NO_x formed by fuel bound nitrogen by dry control methods. Based on this review, the Agency will make any appropriate revisions to the NSPS.

VI. Test Methods and Procedures

The petitioners have raised several issues concerning the correction factors and adjustments provided in the NSPS for stationary gas turbines. They indicated a belief that these corrections and ajustments lower the NO_x emission limit unfairly.

EPA Response

In almost any scientific endeavor that involves the collection of data, an effort is made to remove any bias the data may have and to put all the data collected on a common basis. All of the emission data collected during the development of the stationary gas turbine NSPS were corrected to a common basis using typical gas turbine operating conditions to remove any bias inherent due to variations in individual turbines, operating conditions and ambient conditions. This was done to ensure that all affected facilities using the best system of control could achieve the standard despite variance in these conditions.

Petitioners' Claim

The contention is that correcting the NO_x emission limit to a dry basis penalizes some turbine operators because the NO_x emissions are corrected upward when put on a dry basis. The main objection seems to be that correction to a dry basis eliminates the steam in the exhaust gas which is the result of the water injection. The contention is that because the NO_x emissions are adjusted upward, the operator will have to inject more water to meet the standard, and this will increase the fuel penalty.

EPA Response

It appears that the petitioners have misunderstood the use of this correction factor and that the fact that by applying it equally to the data upon which the standard is based and subsequent compliance data, it removes bias. Such usage is common in emission regulations. It is true that when NO_x emissions measured on a wet basis are corrected to a dry basis, the NO_x emissions when expressed as a concentration are adjusted upward. However, the actual NO_x emissions (mole basis) are not changed by this adjustment. The purpose of the dry basis correction is to remove the effect of dilution in the effluent gas caused by steam or water and put all NO_x emissions on a common basis. Putting all NO_x emissions on a common basis is necessary because the data used during the development of this NSPS were measured at many different moisture concentrations. If the data were not put on a common basis, it would be necessary to establish different NO_x emission limits based on every possible mosture content in a gas turbine exhaust. All of the data were corrected to a dry basis before the NO_x emission limit was established, which means wet controls can achieve 75 ppm NO_x on a dry basis. Therefore, if the NO_x measured in a gas turbine exhaust does not meet the 75 ppm NO_x emission limit after adjustment to a dry basis, it is because the best system of control is not being applied to that turbine.

Petitioners' Claim

Another contention is that the adjustment for oxygen concentration is arbitrary, penalizes turbines which operate at concentrations above 15 percent and is not necessary to prevent circumvention of the standards.

EPA Response

This issue is similar to the dry basis issue just discussed. The purpose for correcting to a specified oxygen concentration is to compensate for the effects of dilution air. If this correction were not made, a turbine operating with the best system of emission reduction and low dilution air might not meet the standard, and a turbine operating with high dilution might meet the standard without using best technology. This correction is consistent with the analytical approach and data base used in developing the standard. The data used during the development of this NSPS were measured at many different oxygen concentrations and if the data were not put on a common basis it would be necessary to establish different NO_x emissions limits based on each possible oxygen concentration in gas turbine exhaust. All of the data were corrected to 15 percent oxygen before the NO_x emission limit was established which means that wet controls can achieve 75 ppm NO_x corrected to 15 percent oxygen. Therefore, if the NO_x measured in a gas turbine exhaust does not meet the 75 ppm NO_x emissions limit after adjustment to 15 percent oxygen, it is because the best system of control is not being applied to that turbine.

Petitioners' Claim

The petitioners have stated that manufacturer's equations were rejected by EPA.

EPA Response

Quite the contrary is true, because the equation in the regulation is a composite of all the common elements contained in the equations received from the manufacturers (SSEIS, Vol. 1, pages 3-71 thru 3-85). The reason no one ambient correction factor received from a manufacturer was duplicated in the regulation is that no one equation takes into account the performance of all gas turbine combustors. Therefore, besides supplying one general equation for turbine operators convenience, the Agency has allowed the manufacturers to develop their own ambient correction factors for approval by the Administrator, if they feel the equation in the regulations does not accurately reflect the impact of ambient conditions on NO_x emissions from their gas turbine.

Petitioners' Claim

The petitioners state that it is not obvious what the benefit of applying the ambient correction equation in reverse to compare an adjusted emission with what it might have been under ISO conditions.

EPA Response

The petitioners have misunderstood the purpose of the ambient correction factor. A gas turbine covered by the

NSPS is expected to meet NO_x emissions limit of 75 ppm NO_x corrected to 15 percent oxygen on a dry basis and under ambient conditions experienced on an ISO day (288°K, 60 percent relative humidity, 101.3 kilopascals pressure). Changes in these ambient conditions cause the NO_x emissions from gas turbines to change. For example, as the ambient temperature increases above 288°K the NO_x emissions from a gas turbine will also increase. This means that an operator could be injecting water at a rate to meet the NO_x emission limit at ISO conditions which is considered to be the best control system but the actual NO_x emissions at site conditions would be above the NO_x emission limit. Therefore, if there were no ambient correction factor the operator would have to inject even more water to meet the NO_x emission limit than is required by the best control system on which the standard is based. This could lead to an unreasonable fuel penalty or economic impact. The reverse can happen if the ambient conditions cause the NO_x emissions from a gas turbine to be less than they would be if ISO standard dry conditions existed. An operator could inject less water than would be necessary on an ISO standard day and would therefore be using less than the best control system unless the NO_x emissions were corrected to ISO conditions by the ambient correction factor. The purpose of the ambient correction factor, therefore, is to ensure the use of the best control system, i.e., the proper amount of water injection, or steam injection at all times.

Petitioners' Claim

The petitioners contended that Method 20 is unnecessarily burdensome in its sampling requirements and that Method 7 should be permitted as an alternative.

EPA Response

Method 20 requires that the exhaust gas samples be obtained from at least eight traverse points across the stack because the characteristics of gas turbine exhaust leads to uneven mixing of NO_x gases. It is necesary therefore, to traverse the stack to obtain a representative sample of NO_x gas from the exhaust. However, Section 60.8(b) of the General Provisions states that: "Performance tests shall be conducted and data reduced in accordance with the test methods and procedures contained in each applicable subpart unless the Administrator (1) specifies or approves in specific cases, the use of a reference method with minor changes in methodology, (2) approves the use of an equivalent method, (3) approves the use of an alternative method the results of which he has determined to be adequate for indicating whether a specific source is in compliance, or (4) waives the requirement for performance tests because the owner or operator of a source has demonstrated by other means to the Administrator's satisfaction that the affected facility is in compliance with the standard." Under this provision, it would be possible to have the multiple-point traverse requirement waived by the Administrator if it can be shown that the turbine in question has a uniform gas concentration profile across the stack.

Petitioners' Claims

The petitioners also state that Method 20 imposes considerable burdens and will require more on-site equipment, specialized instrumentation, and calibration gases, for an increased accuracy.

EPA Response

Tests done by EPA comparing Method 20 type equipment and Method 7 which is a manual method showed that Method 7 was less accurate and less reproducible than Method 20 at the NO_x concentration levels expected from gas turbines (II-A-003b, 3c). Also, the cost of a performance test done according to Method 20 is $2,000–$4,000 as compared to $6,000–$10,000 for Method 7 (VI-D-36). Thus, in the case of gas turbine testing, EPA believes that Method 20 is both the lowest cost and most accurate and precise method available. However, it is not the Agency's intent to impose a test method that is more costly than is necessary or warranted, especially if acceptable lower cost methods are available. As mentioned earlier according to Section 60.8(b) of the General Provisions the Administrator can approve equivalent and alternative test methods for performance testing. The provision for use of alternative methods is specifically designed to provide for the use of lower cost methods which may not be as accurate, but which are judged adequate for determining compliance. Under this provision, for example, a less precise or accurate method could be used provided that the source is sufficiently below the standard to compensate for the imprecision or inaccuracy. Similarly, if lower cost equivalent methods are available there is provision for use of these also.

In summary, the adjustments, corrections, and test procedures associated with this standard are necessary to allow the Agency to write a reasonable regulation, to ensure uniform compliance and enforcement, and to ensure that the standard reflects application of best system of control for the reduction of NO_x from statutory gas turbines.

Dated: December 5, 1980.

Douglas M. Costle,

Administrator.

[FR Doc. 80-38378 Filed 12-10-80; 8:45 am]

BILLING CODE 6560-26-M

[FRL 1620-8; OPTS-51144]

Ethene-Alkene-Vinyl Carbonyl Amine Polymer; Premanufacture Notice

Correction

In FR Doc. 80-30371 appearing on page 65030 in the issue of Wednesday, October 1, 1980, make the following corrections:

1. The FR Document number incorrectly reading "FR Doc. 80-3037" should have read "FR Doc. 80-30371."
2. The heading should have read as set forth above.
3. On page 65031, third column, the fourth line of the paragraph beginning *"Specific Chemical Identity."* now reading "vinyl carbonylamine polymer." should have read "vinyl carbonyl amine polymer."

BILLING CODE 1505-01-M

FEDERAL MARITIME COMMISSION

[Agreement No. T-3933]

Lease Agreement Between City of Long Beach and Toyota Motor Sales, U.S.A., Inc.; Availability of Finding of No Significant Impact

Upon completion of an environmental assessment in the matter of Agreement No. T-3933, the Federal Maritime Commission's Office of Environmental Analysis has determined that Commission approval, disapproval or modification of this agreement will not significantly alter existing conditions and, therefore, will not significantly impact upon the quality of the human environment within the meaning of the National Environmental Policy Act of 1969, 42 U.S.C. 4321 *et seq.* For a description of the agreement, please refer to 45 FR 76514 (November 19, 1980).

This Finding of No Significant Impact (FONSI) will become final within 20 days unless a petition for review is filed pursuant to 46 CFR 547.6(b).

The environmental assessment and FONSI are available for inspection on request from the Office of the Secretary, Room 11101, Federal Maritime

Commission, Washington, D.C. 20573, telephone (202) 523-5725.

Francis C. Hurney,

Secretary.

[FR Doc. 80-38399 Filed 12-10-80; 8:45 am]

BILLING CODE 6730-01-M

[Agreement No. 9522-44]

Mediterranean-Gulf Conference; Availability of Finding of No Significant Impact

Upon completion of an environmental assessment, the Federal Maritime Commission's Office of Environmental Analysis (OEA) has determined that the Commission's decision will not constitute a major Federal action significantly affecting the quality of the human environment within the meaning of the National Environmental Policy Act of 1969, 42 U.S.C. § 4321 *et seq.*, and that preparation of an environmental impact statement is not required. For a description of this agreement, please refer to 45 FR 41216 (June 18, 1980).

This finding of No Significant Impact (FONSI) will become final within 20 days unless a petition for review is filed pursuant to 46 CFR 547.6(b).

The FONSI and related environmental assessment are available for inspection on request from the Office of the Secretary, Room 11101, Federal Maritime Commission, Washington, D.C. 20573, telephone (202) 523-5725.

Francis C. Hurney,

Secretary.

[FR Doc. 80-38400 Filed 12-10-80; 8:45 am]

BILLING CODE 6730-01-M

FEDERAL RESERVE SYSTEM

Dakota County Bancshares, Inc; Formation of Bank Holding Company

Dakota County Bancshares, Inc., Mendota Heights, Minnesota, has applied for the Board's approval under section 3(a)(1) of the Bank Holding Company Act (12 U.S.C. 1842(a)(1)) to become a bank holding company by acquiring 100 percent of the voting shares (less director's qualifying shares) of Dakota County State Bank, Mendota Heights, Minnesota. The factors that are considered in acting on the application are set forth in section 3(c) of the Act (12 U.S.C. 1842(c)).

The application may be inspected at the offices of the Board of Governors or at the Federal Reserve Bank of Minneapolis. Any person wishing to comment on the application should submit views in writing to the Secretary, Board of Governors of the Federal Reserve System, Washington, D.C. 20551 to be received no later than January 5, 1981. Any comment on an application that requests a hearing must include a statement of why a written presentation would not suffice in lieu of a hearing, identifying specifically any questions of fact that are in dispute and summarizing the evidence that would be presented at a hearing.

Board of Governors of the Federal Reserve System, December 5, 1980.

Jefferson A. Walker,

Assistant Secretary of the Board.

[FR Doc. 80-38358 Filed 12-10-80; 8:45 am]

BILLING CODE 6210-01-M

GENERAL SERVICES ADMINISTRATION

[GSA Bulletin FPMR G-152]

Transportation and Motor Vehicles; Fuel Economy Mileage Information for Use in Preparing Fiscal Year 1981 Vehicle Acquisition Forecasts

December 4, 1980.

To: Heads of Federal agencies.

1. *Purpose.* This bulletin announces the vehicle miles per gallon (mpg) ratings to be used by Federal agencies in preparing their fiscal year (FY) 1981 vehicle acquisition forecasts for passenger automobiles (sedans and station wagons) and light trucks (8,500 pounds gross vehcile weight rating (GVWR) and under).

2. *Expiration date.* This bulletin expires September 30, 1981.

3. *Background.*

a. To implement the provisions of Public Law 94-163 and Executive Orders 11912 (dated April 13, 1976) and 12003 (dated July 20, 1977), the General Services Administration (GSA) added Subpart 101-38.13, Energy Conservation in Motor Vehicle Management, to the Federal Property Management Regulations (FPMR) and issued FPMR Temporary Regulation G-42, Acquisition of Fuel-Efficient Light Trucks by the Federal Government. These regulations established policy and procedures governing the acquisition by Federal agencies of passenger automobiles (sedans and station wagons) and light trucks (8,500 pounds GVWR and under).

b. In accordance with Subpart 101-38.13 and FPMR Temporary Regulation G-42, Federal agencies that will acquire vehicles during the fiscal year shall furnish GSA a separate forecast of their total passenger automobile and light truck acquisition requirements, based on the latest applicable fuel economy information issued by the Environmental Protection Agency (EPA).

c. Attachment A to this bulletin provides mpg ratings by vehicle class for use in the preparation of agency acquisition forecasts of passenger automobiles. Additionally, it lists examples of the mpg ratings for individual vehicles in each class. Attachment B provides mpg ratings for use in the preparation of agency acquisition forecasts of light trucks (8,500 pounds GVWR and under).

d. Sedans and station wagons with an EPA mileage rating less than 22 mpg as shown in attachment A of this bulletin and the 1981 mpg guide contained in Federal Standard 122T will not be purchased or leased. When combining both purchased and leased passenger vehicles the fleet average must be 26 mpg or better.

The method of calculating the fleet average fuel economy uses harmonic averaging and is specifically required by section 510 of the Motor Vehicle Information and Cost Savings Act (80 Stat. 915, 15 U.S.C. 2010) for passenger automobiles. It is being extended to apply to the calculation of the light truck fleet average fuel economy.

The following is an example of how to calculate, for acquisition forecast purposes, the fleet average fuel economy for 600 4 by 2 light trucks using a harmonic averaging formula.

Total number of light trucks (600) divided by:

1. Six-cylinder automatic transmission van-wagons and van-panels for use in 49 States (100) divided by 17 mpg, plus
2. Eight-cylinder automatic transmission van-wagons and van-panels for use in California (50) divided by 14 mpg, plus
3. Six-cylinder automatic transmission pickups for use in 49 States (200) divided by 17 mpg, plus
4. Eight-cylinder automatic transmission pickups for use in California (50) divided by 14 mpg, plus
5. Four-cylinder automatic transmission compact pickups for use in 49 States (150) divided by 22 mpg, plus
6. Four-cylinder, 4-speed manual transmission compact pickups for use in California (25) divided by 24 mpg, plus
7. Six-cylinder automatic transmission sedan deliveries for use in 49 States (25) divided by 19 mpg.

$$= \frac{600}{\frac{100}{17} + \frac{50}{14} + \frac{200}{17} + \frac{50}{14} + \frac{150}{22} + \frac{25}{24} + \frac{25}{19}}$$

$$= \frac{600}{5.88 + 3.57 + 11.76 + 3.57 + 6.82 + 1.04 + 1.32}$$

$$= \frac{600}{33.96} = 17.7 \text{ (Rounded to the nearest 0.1 mpg)}$$

4. *Suggested action.* Each agency should use the attached miles per gallon rating information in preparing its acquisition forecast for both passenger automobiles and light trucks.

5. *Information and assistance.* Combined mpg ratings of individual passenger vehicles not listed in attachment A, or combined mpg ratings of individual light trucks, may be found in the Environmental Protection Agency's 1981 Fuel Economy Information Guide or from the General Services Administration (TMM), Washington, D.C. 20406, (202) 275-1021.

Allan W. Beres,

Commissioner, Transportation and Public Utilities Service.

Attachment A.—*Passenger Automobile Miles Per Gallon Data*

		Transmissions			
		Automatic		Manual	
Class	Sedans	49 States	California	49 States	California
IB	Standard 4 cylinder	28	27	32	29
Subcompact	Diesel (YD)	N/A	N/A	45	45
Examples:	Engines:				
Chev Chevette	98/4	29	29	33	31
Ford Escort	98/4	30	———	32	32
Ply Horizon	105/4	29	27	33	29
Do.	135/4	28	27	30	29
Volks Rabbit	97/4 Diesel	N/A	N/A	45	45
Volks Rabbit	105/4	28	28	33	30
II	Standard 4 cylinder	25	25	26	26
Compact	Optional 6 cylinder(E2)	23	23	25	27
Do.	Optional 8 cylinder(E3)	[1] 20	[1] 19	N/A	N/A
Examples:	Engines:				
AMC Concord	151/4	22	24	27	26
Do.	258/6	22	22	22	22
Chev Citation	151/4	26	26	26	26
Do.	173/6	25	23	25	25
Dodge Aries	135/4	28	27	30	29
Ford Fairmont	140/4	25	25	27	25
Do.	200/6	23	23	N/A	N/A
Plym Reliant	135/4	28	27	30	29
III	Standard 6 cylinder	22	24	N/A	N/A
Mid-Size	Optional 8 cylinder(E3)	22	22	N/A	N/A
	Diesel 8 cylinder(YD)	27	26	N/A	N/A
Examples:	Engines:				
Buick Century	231/6	24	24	[2] 20	N/A
Do.	265/8	22	22	N/A	N/A
Chev Malibu	229/6	22	N/A	N/A	N/A
Do.	231/6	N/A	24	N/A	N/A
Olds Cutlass	350/8 Diesel	27	26	N/A	N/A
IV	Standard 6 cylinder	22	23	N/A	N/A
Large	Optional 8 cylinder(E3)	[1] 20	[1] 19	N/A	N/A
Do.	Optional 8 cylinder(E4)	[1] 19	N/A	N/A	N/A
Do.	Diesel (YD)	26	25	N/A	N/A
Examples:	Engines:				
Chev Impala	229/6	[2] 21	N/A	N/A	N/A
Do.	267/8	[2] 21	N/A	N/A	N/A
Do.	231/6	N/A	23	N/A	N/A
Do.	350/8 Diesel	26	N/A	N/A	N/A
Ford Ltd.	302/8	[2] 19	N/A	N/A	N/A
Plym Grand Fury	225/6	[2] 10	N/A	N/A	N/A
Do.	318/8	[2] 20	[2] 19	N/A	N/A
Olds Delta 88	231/6	22	23	N/A	N/A
	Station Wagons:				
I Subcompact	Not applicable	———	———	———	———
II	Standard 6 cylinder	22	22	22	22
Compact	Optional 4 cylinder(E0)	22	24	27	26
Examples:	Engines:				
Chev Malibu	229/6	22	24	N/A	N/A
Do.	267/8	[2] 21	[2] 19	N/A	N/A
Ford Fairmont	140/4	N/A	N/A	27	27
Do.	200/6	[2] 20	[2] 20	N/A	N/A
Plym Reliant	135/4	27	27	29	29
III Mid-Size	Not applicable	———	———	———	———
IV	Standard 8 cylinder	[2] 18	[2] 18	N/A	N/A
Large	Optional 8 cylinder(E4)	[1] 18	[1] 18	N/A	N/A
Do.	Diesel (yd)	25	25	N/A	N/A
Examples:	Engines:				
Chev Impala	267/8	[2] 18	N/A	N/A	N/A
Do.	305/8	[2] 18	N/A	N/A	N/A
Do.	350/8 (Diesel)	25	25	N/A	N/A
Ford LTD	302/8	[2] 19	N/A	N/A	N/A
Do.	351/8	———	18	N/A	N/A

Key:

N/A=Not applicable.

[1] Does not comply with 22 miles per gallon minimum established by Executive Order 12003. May not be used to prepare agency forecast.

[2] Requires written authorization from the Administrator of General Services and the Secretary of Energy. Must also be included in the agency fleet average fuel economy calculation.

Attachment B.—*4 by 2 Light Truck miles per gallon data*

Model and item	Engine	Transmissions					
		Automatic		Manual T3		Manual T4 (PTO) [1]	
		49 States	Calif.	49 States	Calif.	49 States	Calif.
Utility 1	Std 4 cyl	22	22	N/A	N/A	N/A	N/A
Utility 2	Std 6 cyl	17	N/A	19	N/A	N/A	N/A
	Opt 8 cyl(E3)	18	15	17	N/A	19	N/A
Van-Wagon 20	Std 6 cyl	16	15	19	19	N/A	N/A
(FC)	Opt 8 cyl(E3)	15	14	16	16	N/A	N/A
Van-Wagon 21	Std 6 cyl	16	15	19	19	N/A	N/A
(FC)	Opt 8 cyl(E3)	15	14	16	16	N/A	N/A
Van-Wagon 22	Opt 8 cyl(E3)	16	12	N/A	N/A	N/A	N/A
Van-Panel 30	Std 6 cyl	18	16	21	17	N/A	N/A
(FC)	Opt 8 cyl(E3)	16	15	17	16	N/A	N/A
Van-Panel 31	Std 6 cyl	18	16	21	17	N/A	N/A
(FC)	Opt 8 cyl(E3)	16	15	17	16	N/A	N/A
Van-Panel 32	Std 6 cyl	18	16	20	N/A	N/A	N/A
(FC)	Opt 8 cyl(E3)	16	15	N/A	N/A	N/A	N/A
Pickup 40	Std 6 cyl	19	16	20	17	20	N/A
2 dr cab	Opt 6 cyl(E0)	N/A	N/A	24	N/A	N/A	N/A
Do	Opt 8 cyl(E3)	18	15	18	16	15	N/A
Do	Diesel (yd)		23	21	N/A	N/A	N/A
Pickup 41	Std 6 cyl	19	16	20	17	20	N/A
2 dr cab	Opt 8 cyl(E3)	18	15	18	16	15	N/A
Pickup 42	Std 6 cyl	17	18	19	N/A	19	N/A
2 dr cab	Opt 8 cyl(E3)	17	15	18	N/A	15	14
Pickup Compact 60	Std 4 cyl	23	22	28	28	N/A	N/A
Chassis and cab 71	Std 8 cyl	13	11	N/A	N/A	14	N/A
Carryall 101	Std 8 cyl	17	14	17	N/A	N/A	N/A
Sedan 110	Std 6 cyl	19	19	22	22	N/A	N/A
Delivery	Opt 4 cyl(E1)	22	24	27	26	N/A	N/A
Van Panel 161	Std 6 cyl	18	16	21	17	N/A	N/A
Maint Conver (FC)	Opt 8 cyl(E3)	16	15	17	16	N/A	N/A

Key:
N/A=Not applicable.
[1] PTO—Transmission with power take-off (See Federal Standard 307G).

4 by 4 Light Trucks miles per gallon data

Model and item	Engine	Transmissions			
		Automatic		Manual	
		49 States	California	49 States	California
Utility 5	Standard 4 cylinder	N/A	N/A	24	24
Do.	Optional 6 cylinder(E2)	N/A	N/A	20	20
Utility 6	Standard 4 cylinder	20	20	24	24
Do.	Optional 6 cylinder(E2)	18	20	20	20
Utility 7	Standard 6 cylinder	17	18	18	19
Do.	Optional 8 cylinder(E3)	15	14	15	N/A
Pickup 46	Standard 6 cylinder	17	18	18	19
2 door cab	Optional 8 cylinder(E3)	15	14	15	N/A
Pickup 47	Standard 6 cylinder	N/A	N/A	17	N/A
2 door cab	Optional 8 cylinder(E3)	14	13	14	14
Pickup (compact) 65	Standard 4 cylinder	20	20	24	23
Chassis/cab	Standard 6 cylinder	N/A	N/A	N/A	N/A
2 door (Jeep only) 77	Optional 8 cylinder(E3)	13	N/A	14	N/A
Maint Tel Utility	Standard 6 cylinder	N/A	N/A	N/A	N/A
2 dr cab (Jeep only) 87	Optional 8 cylinder(E3)	13	N/A	14	N/A
Carryall 105	Standard 6 cylinder	18	18	18	19
Do.	Optional 8 cylinder(E3)	15	N/A	15	N/A
Sed Del 115	Standard 6 cylinder	19	19	20	20
Do.	Optional 4 cylinder(E0)	N/A	N/A	24	N/A
Stake Tr 127	Standard 6 cylinder				
(Jeep only)	Optional 8 cylinder(E3)	13		14	

Key:
N/A=Not applicable.

[FR Doc. 80-38410 Filed 12-10-80; 8:45 am]

BILLING CODE 6820-AN-M

DEPARTMENT OF HEALTH AND HUMAN SERVICES

Centers for Disease Control

National Institute for Occupational Safety and Health

Comparative Cardiac Effects of Inhaled Amines; Open Meeting

The following meeting will be convened by the National Institute for Occupational Safety and Health of the Centers for Disease Control and will be open to the public for observation and participation, limited only by space available:

Comparative Cardiac Effects of Inhaled Amines

Date: December 16, 1980.

Time: 9:00 a.m. to 2:00 p.m.

Place: Robert A. Taft Laboratories, 4676 Columbia Parkway, Room B-38, Cincinnati, Ohio 45226.

Purpose: To discuss protocols for evaluating cardiac effects of inhaled amines in laboratory animals.

Additional information may be obtained from: Dennis W. Lynch, Division of Biomedical and Behavioral Science, National Institute for Occupational Safety and Health, Centers for Disease Control, 4676 Columbia Parkway, Cincinnati, Ohio 45226, Telephone: (513) 684-8274.

Dated: December 5, 1980.

William C. Watson, Jr.,

Acting Director, Centers for Disease Control.

[FR Doc. 80-38423 Filed 12-10-80; 8:45 am]

BILLING CODE 4110-87-M

DEPARTMENT OF THE INTERIOR

Fish and Wildlife Service

Endangered Species Permit; Receipt of Applications

The applicants listed below wish to be authorized to conduct the specified activity with the indicated Endangered Species:

Applicant: New York Zoological Society, Bronx Zoo, Bronx, New York, PRT 2-7279.

The applicant requests a permit to import one white-naped crane (*Grus vipio*) from the Vogelpark Walsrode, West Germany and to export one white-naped crane to the Vogelpark Walsrode for enhancement of propagation and survival.

Applicant: Kenneth Kalenak, Saginaw, Michigan, PRT 2-7271.

The applicant requests a permit to purchase in interstate commerce two captive-bred nene geese (*Branta sandvicensis*) from the Gladys Porter Zoo, Brownville, Texas for enhancement of propagation and suvival.

Applicant: Seneca Park Zoo, Rochester, New York 14621, PRT 2-7337.

The applicant requests a permit to purchase in interstate commerce three white-handed gibbons (*Hylobates lar*) from International Animal Exchange, Ferndale, Michigan for enhancement of propagation and survival.

Applicant: Houston Zoological Gardens, Houston, Texas, PRT 2-7351.

The applicant requests a permit to import six captive-bred Round Island geckos (*Phelsuma guentheri*) from the Jersey Wildlife Preservation Trust, Jersey, Channel Islands for enhancement of propagation and survival.

Humane care and treatment during transport, if applicable, has been indicated by the applicant.

Documents and other information submitted with these applications are available to the public during normal business hours in Room 605, 1000 N. Glebe Road, Arlington, Virginia, or by writing to the Director, U.S. Fish & Wildlife Service, WPO, P.O. Box 3654, Arlington, VA 22203.

Interested perons may comment on these applications on or before January 12, 1981 by submitting written data, views, or arguments to the Director at the above address.

Dated: December 5, 1980.

Donald G. Donahoo,

Chief, Permit Branch, Federal Wildlife Permit Office, U.S. Fish & Wildlife Service.

[FR Doc. 80-38463 Filed 12-10-80; 8:45 am]

BILLING CODE 4310-55-M

Endangered Species Permit; Receipt of Application

Applicant: Southeast Fisheries Center, National Marine Fisheries Center, Miami, Florida 33149.

The applicant requests an amendment to permit PRT 2–4481 to allow currently authorized activities with all Federally protected species of sea turtles to be conducted throughout the United States, and to add authorization to import both live and salvaged specimens of these species for the purposes of scientific research and enhancement of propagation.

Humane care and treatment during transport has been indicated by the applicant.

Documents and other information submitted with this application are available to the public during normal business hours in Room 605, 1000 N. Glebe Road, Arlington, Virginia, or by writing to the Director, U.S. Fish and Wildlife Service (WPO), P.O. Box 3654, Arlington, VA 22203.

This application has been assigned file number PRT 2–4481. Interested persons may comment on this application on or before January 12, 1981 by submitting written data, views, or arguments to the Director at the above address. Please refer to the file number when submitting comments.

Dated: December 5, 1980.

Donald G. Donahoo,

Chief, Permit Branch, Federal Wildlife Permit Office, U.S. Fish and Wildlife Service.

[FR Doc. 80-38464 Filed 12-10-80; 8:45 am]

BILLING CODE 4310-55-M

Geological Survey

Oil and Gas and Sulphur Operations in the Outer Continental Shelf

AGENCY: U.S. Geological Survey, Department of the Interior.

ACTION: Notice of the receipt of a proposed development and production plan.

SUMMARY: This Notice announces that Kerr-McGee Corporation, Unit Operator of the Ship Shoal Block 28 Federal Unit Agreement No. 14–08–001–2942, submitted on November 18, 1980., a proposed supplemental plan of development/ production describing the activities it proposes to conduct on the Ship Shoal Block 28 Federal Unit.

The purpose of this Notice is to inform the public, pursuant to section 25 of the OCS Lands Act of 1978, that the Geological Survey is considering approval of the plan and that it is available for public review at the offices of the Conservation Manager, Gulf of Mexico OCS Region, U.S. Geological Survey, 3301 N. Causeway Blvd., Room 147, Metairie, Louisiana 70002.

FOR FURTHER INFORMATION CONTACT: U.S. Geological Survey, Public Records, Room 147, open weekdays 9:00 a.m. to 3:30 p.m., 3301 N. Causeway Blvd., Metairie, Louisiana 7002, Phone (504) 837–4720, ext. 336.

SUPPLEMENTARY INFORMATION: Revised rules governing practices and procedures under which the U.S. Geological survey makes information contained in Development and Production Plans available to affected States, executives of affected local governments, and other interested parties became effective on December 13, 1979 (44 FR 53685). Those practices and procedures are set out in a revised § 250.34 of title 30 of the Code of Federal Regulations.

Dated: December 3, 1980.

J. Courtney Reed,

Staff Assistant for Resource Evaluation.

[FR Doc. 80-38356 Filed 12-10-80; 8:45 am]

BILLING CODE 4310-31-M

Known Recoverable Coal Resource Area; Camp Swift, Tex.

Pursuant to authority contained in the Act of March 3, 1879 (43 U.S.C. 31), as supplemented by Reorganization Plan No. 3 of 1950 (43 U.S.C. 1451, note), 220 Departmental Manual 2, Secretary's Order No. 2948, and Section 8A of the Mineral Leasing Act of February 25, 1920, as added by Section 7 of the Federal Coal Leasing Amendments Act of 1976 (Pub. L. 94–377, August 4, 1976, as amended by Pub. L. 95–554, October 30, 1978), Federal lands within the State of Texas have been classified as subject to the coal leasing provisions of the Mineral Leasing Act of February 25, 1920, as amended (30 U.S.C. 201). The name of the area, effective date, and total acreage involved are as follows:

(43) Texas

Camp Swift (Texas) Known Recoverable Coal Resource Area; August 28, 1980; 9,219 acres.

A diagram showing the boundaries of the area classified for leasing has been filed with the appropriate land office of the Bureau of Land Management. Copies of the diagram may be obtained from the Conservation Manager, South Central Region, U.S. Geological Survey, Box 26124, Albuquerque, New Mexico 87125.

Dated: November 26, 1980.

James W. Sutherland,

Regional Conservation Manager, South Central Region.

[FR Doc. 80-38423 Filed 12-10-80; 8:45 am]

BILLING CODE 4310-31-M

Notice to Lessees and Operators, Outer Continental Shelf (OCS) Regions

AGENCY: U.S. Geological Survey, Department of the Interior.

ACTION: Final Notice to Lessees and Operators (NTL) in the Outer Continental Shelf concerning produced oil and gas exempt from royalty requirements.

SUMMARY: This Notice sets forth the royalty requirements for oil and gas produced from OCS leases. The Notice exempts from royalty payments all oil and gas unavoidably leaked, spilled, vented, flared, or lost in OCS lease or unit operations.

DATE: This notice shall become effective on or before January 12, 1981.

FOR FURTHER INFORMATION CONTACT: Ronald Prehoda, Branch of Offshore Oil and Gas Operations, Conservation Division, U.S. Geological Survey, Mail Stop 640, Reston, Virginia 22092; Telephone: 703/860–7571.

SUPPLEMENTARY INFORMATION:

Background

On August 13, 1980, a proposed NTL was published in the Federal Register (Vol. 45, No. 158) for comment. Eleven comments representing the views of 22 companies and individuals were received.

Differences Between Proposed Notice and Final Notice

The differences between the provisions of the proposed Notice and the Final Notice are the result of the Department's efforts to incorporate the comments of the public, to make the provisions of the Notice clearer, and to implement a change in the departmental policy concerning the collection of royalties.

Discussion of Comments

Several comments indicated confusion with the second paragraph under I.B. This pargraph was intended to apply to all leases, not just those issued prior to June 1, 1974. We agree that the location of this paragraph is confusing and have revised the NTL to provide a clearer meaning. A new subsection "C" has been added to set out royalty requirements for those leases issued after July 1, 1974 (see discussion below for explanation of the July 1, 1979, date).

One commenter raised the point that some leases issued *after* June 1, 1974, excluded "helium and gas used for purposes of production from and operations upon the leased area or unavoidably lost" from being subject to a royalty obligation. This situation arose because bids were received at OCS Sale No. 34 on May 29, 1974, but the decision to accept or reject specific high bids was not made until June 4, 1974. Winning bidders had the option of taking their leases with an effective date of either June 1, 1974, or July 1, 1974. We agree that the June 1, 1974, cut-off date may be inappropriate and have revised the NTL to reflect a July 1, 1974, cut-off date. This change will insure that those leases that specifically exempt "gas used for purposes of production * * * unavoidably lost" from royalty payments will be eligible for a refund for any royalty that might have been paid for such gas.

Several commenters stated that oil or gas used in lease operations should not be subject to royalty payment regardless of when the lease was issued, and cited the Mineral Leasing Act as support. We do not agree. The OCS Lands Act, as amended, does not specifically exempt from being subject to royalty, oil or gas produced from and used on the lease for production purposes, as do Sections 18 and 19 of the Mineral Leasing Act. In addition, with regard to OCS leases, we are not attempting to collect royalty on gas in contravention of a specific lease term, but only on gas used from production purposes on leases which do not exempt such gas from royalty payments. The Department having reconsidered the royalty requirements of leassees of OCS leases has determined that it is legally correct to collect royalty on oil and gas used for production purposes unless the lease terms exempt such oil and gas from royalty.

Several commenters stated that the NTL should have specifically provided for refunds for gas used for production purposes on those leases where such gas was specifically exempted from royalty and also for royalty that was paid on gas that was reinjected. We agree and have added such language to Section IV.

One commenter stated that reinjected liquids should be treated the same as reinjected gas, i.e., royalty should not be due until they are finally produced. We agree and have added language to this effect.

Two respondents commented on the NTL's treatment of "avoidably lost" and "unavoidably lost" oil and gas. One commenter stated that no distinction should be made between the two and that royalty should not be required on any oil or gas that is lost. We do not agree. Oil and gas which is "avoidably lost" represents oil and gas which is lost through waste attributable to actions or nonactions of the lessee or operator. Departmental regulations dating at least as far back as 1969 provided for compensation to the lessor for the loss of rental and amount or value of production accruing to the lessor as royalty through *waste* or failure to drill and produce protection wells on a lease. Commenters also stated that if the distinction between "avoidable" and "unavoidable" is retained in the NTL, then a standard should be established for such distinction. We believe that the NTL adequately addresses this matter; furthermore, an Onshore NTL related to this matter makes a similar distinction.

Concern was also expressed over the latitude given the Deputy Conservation Manager under Section II, in determining if "all reasonable measures to prevent and/or control the loss" of oil or gas has been taken by the lease operator. We feel the NTL is adequate in this regard. These instances will be reviewed by the Deputy Conservation Manager on a case-by-case basis and in the event of an adverse ruling by the Deputy Conservation Manager, the lessee or operator may choose to appeal such ruling through the appeal procedures available.

Dated: November 19, 1980.

Lowell G. Hammons,

Acting Deputy Division Chief, Offshore Minerals Regulation Conservation Division.

The Final NTL is revised to read as follows:

Notice to Lessees and Operators of Federal Oil and Gas Leases in the Outer Continental Shelf (OCS)

Royalty Paym,ent Exemptions for Oil and Gas produced from OCS Leases

This Notice supersedes the Gulf of Mexico's Notice 78-5 dated March 20, 1978 (and the Pacific OCS Area's NTL entitled "Royalty Payments on Oil and Gas Lost" dated November 1, 1974).

I. General

Effective June 1, 1974, the following royalty provisions shall apply to oil and gas production from OCS leases.

A. For All OCS Leases

(1) Royalty is not due on oil that the Deputy Conservation Manager determines to have been unavoidably leaked, spilled, or lost in lease or unit operations.

(2) Royalty is not due on gas that the Deputy Conservation Manager determines to have been unavoidably vented, flared, or lost in lease or unit operations.

(3) Royalty is not due on gas and associated liquids used for reinjection in a reservoir either within or outside the lease or unit area until the time they are finally produced.

B. For OCS Leases Issued on or Prior to July 1, 1974. For leases issued on or prior to July 1, 1974, in addition to the exemptions from royalty listed in Part A, royalty is not due on gas used for purposes of production from and operations within or outside the lease or unit area. Royalty is due on all other oil and gas production, including production that is avoidably lost.

C. For OCS Leases Issued After July 1, 1974. For leases issued after July 1, 1974, royalty is due on all other oil and gas production, including production that is avoidably lost, and oil or gas used for purposes of production from and operations within or outside the lease or unit area. Gas and associated liquids used for reinjection in a reservoir either within or outside the same lease or unit will be subject to a royalty obligation at the time they are finally produced.

II. Definitions

A. "Unavoidably lost" production shall mean that oil or gas which is lost because of line failures, equipment, malfunctions, blowouts, fires, or otherwise if the Deputy Conservation Manager determines that said loss did not result from the negligence or the failure of the lessee or operator to take all reasonable measures to prevent and/or control the loss. Unavoidably vented or flared gas includes flaring approved by the Deputy Conservation Manager.

B. "Avoidably lost" production shall mean the venting or flaring of produced gas without the authorization, approval, ratification or acceptance of the Deputy Conservation Manager and the loss of produced oil or gas as a result of (1) negligence on the part of the lessee or operator; (2) the failure of the lessee or operator to take all reasonable measures to prevent and/or to control the loss; (3) the failure of the lessee or operator to comply fully with the applicable lease terms, regulations, OCS Orders, or the prior written orders of the Deputy Conservation Manager; or (4) any combination of the foregoing.

III. Volume Determination

If separate measurements are not available for gas and/or oil volumes that are flared, vented, spilled, and avoidably or unavoidably lost, these volumes shall be estimated by comparison with the last measured throughput, well production tests, or such other methods as may be approved by the Deputy Conservation Manager. The volume and value of all oil and gas

on which royalty is due shall be reported on Form 9-153, Monthly Report of Sales and Royalty. Payments therefore shall be reported on Form 9-614-A, Rental and Royalty Remittance Advice. All volumes of oil and gas produced shall be reported on Form 9-152, Monthly Report of Operations.

IV. Refunds

Lessees and operators who submitted royalty payments under the provisions of Gulf of Mexico NTL 74-14, NTL 74-20, and NTL 78-5, or under Pacific OCS Area NTL's dated June 28, 1974, and November 1, 1974, to the extent that those provisions are contrary to this NTL, may apply for a refund of those payments made for (1) oil that was unavoidably leaked, spilled or lost; (2) gas that was unavoidably vented, flared, or lost; (3) gas that was used for purposes of production from and operations upon the leased area, and; (4) gas and associated liquids that were reinjected into a reservoir. Applications for refunds shall be in the form of a letter signed by an authorized officer or agent of the lessee/operator and for each individual lease shall include:

1. The lease prefix code and lease number.
2. The specific month and year.
3. The product code (01, 02, 03, 04, 41, or 43) used in the reports and payments previously submitted.
4. The volume of exempt oil and/or gas previously reported and the amount of the refund requested.
5. The total amount of refund requested for each lease as a subtotal.
6. The total amount of the refund requested for all leases as a grand total.

Additional instructions in regard to the filing and contents of said applications may be obtained by contacting the Deputy Conservation Manager having jurisdiction over the lease or leases involved.

Dated: November 19, 1980.

Lowell G. Hammons,

Acting Deputy Division Chief, Offshore Minerals Regulation Conservation Division.

[FR Doc. 80-38394 Filed 12-10-80; 8:45 am]

BILLING CODE 4310-31-M

Bureau of Land Management

Burns District Office, Oregon; Diamond Craters Area of Critical Environmental Concern Designation

Pursuant to the authority in the Federal Land Policy and Management Act of 1976 (Sec. 202(c)(3)) and in 43 CFR 1601 I have designated lands within the following described area as the Diamond Craters Area of Critical Environmental Concern:

Williamette Meridian, Oregon

T. 28S., R. 31E.,
Sec. 24: E½NE¼, SW¼NE¼, SE¼NW¼, E½SW¼, and SE¼;
Sec. 25: E½NE¼, NW¼NE¼, NE¼NW¼, and NE¼SE¼.
T. 29S., R. 31E.,
Sec. 1: E½E½;
Sec. 12: NE¼NE¼.
T. 28S., R. 32E.,
Sec. 17: All;
Sec. 18: Lot 4, S½NE¼, SE¼SW¼, and SE¼;
Secs. 19 through 22, inclusive;
Sec. 23: SW¼ and S½SE¼;
Sec. 24: SW¼SW¼;
Sec. 25: NW¼NW¼, S½NW¼, and SW¼;
Secs. 26 through 35, inclusive.
T. 29S., R. 32E.,
Sec. 1: W½NW¼ and SW¼;
Secs. 2 through 6, inclusive;
Sec. 7: Lot 1, N½NE¼, and NE¼NW¼;
Sec. 8: N½, NE¼SW¼, N½SE¼, and SE¼SE¼;
Sec. 9: All;
Sec. 10: N½ and SW¼;
Sec. 11: W½NE¼ and NW¼;
Sec. 15: N½NW¼.

The designated area aggregates approximately 16,656 acres located in Harney County about 40 airline miles southeast of the City of Burns. The area will be managed under an Area of Critical Environmental Concern element in the amended Drewsey Management Framework Plan, Burns District Office.

The Management Framework Plan amendment and associated environmental assessment is available for public inspection in the Burns District Office. This plan amendment is adopted and will be approved subject to the provisions of 43 CFR Subpart 1601.

Information is available at the Bureau of Land Management, Burns District Office, 74 South Alvord, Burns, Oregon 97720. Telephone (503) 563-2071.

Dated: December 2, 1980.

L. Christian Vosler,

District Manager.

[FR Doc. 80-38350 Filed 12-10-80; 8:45 am]

BILLING CODE 4310-84-M

Cedar City District Multiple Use Advisory Council Meeting

Notice is hereby given in accordance with Pub. L. 92-463, that a meeting of the Cedar City District Multiple Use Advisory Council will be held on January 15, 1981.

The meeting will begin at 9:30 a.m. at the Cedar City District Office, 1579 North Main, Cedar City, Utah 84720. The agenda will include a report on recommendations from the last meeting, a report on the final Wilderness Inventory decision, firewood policy, Right-of-Way application processing, Allen Warner Valley Energy System and District wide planning.

All Advisory Council meetings are open to the public. Interested persons may make oral statements at 11:00 a.m. or file written statements for the council's consideration. Anyone wishing to make oral statements must notify the District Manager, P.O. Box 724, Cedar City, Utah 84720 by January 14, 1981. Depending on the number of persons wishing to make a statement, a per person time limit may be established by the District Manager.

Morgan S. Jensen,

District Manager.

December 4, 1980.

[FR Doc. 80-38334 Filed 12-10-80; 8:45 am]

BILLING CODE 4310-84-M

[Serial No. I-015580]

Idaho; Proposed Withdrawal Continuation

December 4, 1980.

The Bureau of Land Management has filed a statement of justification for continuation of an existing land withdrawal made by Public Land Order 3543 of February 11, 1965. The Bureau desires to continue the withdrawal in its entirety for a period of 20 years. The continuation would be made pursuant to the authority contained in Section 204(1) fo the Federal Land Policy and Management Act of October 21, 1976 (90 Stat. 2754; 43 U.S.C. 1714). The following described land is included in the proposed continuation:

Boise Meridian, Idaho

T. 1 N., R. 20 E.,
Sec. 7, NW¼SE¼NE¼SE¼, NE¼SW¼NE¼SE¼.

The area described aggregates 5 acre in Blaine County, Idaho.

The lands have been withdrawn for use as an administrative site. Specifically, the land is being used for a fire lookout and a communication facility for the Bureau and the private sector. Improvements include a fire lookout building and associated facilities and a radio communication complex consisting of an uderground building, antenna tower, and solar collector panels. The land is segregated from operation of the public land laws, including the mining but not the mineral leasing laws. No change in the segregative effect of the withdrawal is proposed.

Notice is hereby given that an opportunity for a public hearing is afforded in connection with the proposed withdrawal continuation. All

interested persons who desire to be heard on the proposal must submit a written request for a hearing to the undersigned officer on or before January 12, 1981. Upon determination by the State Director, Bureau of Land Management, that a public hearing will be held, a notice will be published in the Federal Register giving the time and place of such hearing. In lieu of or in addition to attendance at a scheduled public hearing, written comments or objections to the proposed withdrawal continuation may be filed with the undersigned officer on or before January 12, 1981.

The authorized officer of the Bureau of Land Management will undertake such investigations as are necessary to determine the existing and potential demand for the land and its resources. He will review the withdrawal justification to insure that continuation would be consistent with the statutory objectives of the programs for which the land is dedicated, the area involved is the minimum essential to meet the desired needs, the maximum concurrent utilization of the land is provided for, and an agreement is reached on the concurrent management of the land and its resources. He will also prepare a report for consideration by the Secretary of the Interior, the President, and Congress, who will determine whether or not the withdrawal will be continued and, if so, for how long. The final determination on continuation of the withdrawal will be published in the Federal Register. The existing withdrawal will continue until such final determination is made.

All communication in connection with this proposed withdrawal continuation should be addressed to the Chief, Branch of Lands and Minerals Operations, Bureau of Land Management, Federal Building, Box 042, Boise, Idaho 83724.

Vincent S. Strobel,

Chief Branch of L&M Operations.

[FR Doc. 80-38352 Filed 12-10-80; 8:45 am]

BILLING CODE 4310-84-M

Utah; Wilderness Inventory Decisions on Devils Garden Instant Study Area Which Was Protested

AGENCY: Bureau of Land Management.

ACTION: Notice.

SUMMARY: This notice announces that the original decision on Devils Garden Instant Study Area is now in effect. The restrictions imposed by section 603 of the Federal Land Policy and Management Act are no longer in effect.

On June 18, 1980, a Federal Register notice was published indicating that the final wilderness inventory decision on the Devils Garden ISA was not in effect due to a protest received in that decision. The original decision was published in the Federal Register on May 5, 1980, which was that Devils Garden ISA lacked wilderness characteristics and that it would be recommended to the Secretary of the Interior as nonsuitable for Wilderness designation. This decision is now in effect.

FOR FURTHER INFORMATION CONTACT: Kent Biddulph, Utah BLM State Office (801) 524-5326.

Dated: December 2, 1980.

Gary Wicks,

State Director.

[FR Doc. 80-38339 Filed 12-10-80; 8:45 am]

BILLING CODE 4310-84-M

Cedar City District Grazing Advisory Board; Meeting

Notice is hereby given in accordance with Public Law 92-463 that a meeting of the Cedar City District Grazing Advisory Board will be held on Wednesday, January 28, 1981. The meeting will begin at 9:30 a.m. in the Bureau of Land Management District Office located at 1579 North Main Street, Cedar City, Utah.

The agenda items to be discussed are:

1. Report on recommendations from the last meeting.
2. Range Improvements
3. District wide AMPs

Grazing advisory board meetings are open to the public. Interested persons may make oral statements or file written statements for the board's consideration. Oral statements will be received at 11:00 a.m. Anyone wishing to make an oral statement must notify the District Manager, Bureau of Land Management, 1579 North Main Street, Cedar City, Utah 84720, phone 801-586-2401, by January 26, 1981. Depending on the number of persons wishing to make statements, a per person time limit may be established by the District Manager.

Summary minutes of the board meeting will be maintained in the District Office and be available for public inspection and reproduction (during regular business hours) within 30 days following the meeting.

Morgan S. Jensen,

District Manager.

December 5, 1980.

[FR Doc. 80-38422 Filed 12-10-80; 8:45 am]

BILLING CODE 4310-84-M

[I-9940]

Idaho; Termination of Proposed Withdrawal and Reservation of Lands

December 5, 1980.

Notice of an application, serial number I-9940, for withdrawal and reservation of lands was published as Federal Register Document No. 75-31694 on page 54593 of the issue for November 25, 1975. The U.S. Forest Service has cancelled is application insofar as it involved the lands described below. Therefore, pursuant to the regulations contained in 43 CFR, Subpart 2091, such lands will be at 10:00 a.m. on January 12, 1981 relieved of the segregative effect of the above mentioned application.

The lands involved in this notice of termination are:

Boise Meridian

Kaniksu National Forest—Long Mountain Road No. 2697

T. 55 N., R. 3 W.,

Sec. 20, W½NE¼, NE¼SW¼.

A strip of land 66 feet in width being 33 feet on each side of the centerline across the above-cited subdivision.

The area described aggregates 5.70 acres, more or less, in Bonner County, Idaho.

Vincent S. Strobel,

Chief, Branch of L&M Operations.

[FR Doc. 80-38421 Filed 12-10-80; 8:45 am]

BILLING CODE 4310-84-M

Multiple Use Advisory Council; Meetings

AGENCY: Bureau of Land Management, Interior.

ACTION: Notice of meetings.

SUMMARY: The Ely District Multiple Use Advisory Council will conduct its second and third meetings on Friday, January 16, 1981, and Thursday, February 5, 1981. Both meetings will be held in the Conference Room of the Ely District BLM Office, Pioche Highway, Ely, Nevada, from 1 p.m. to 6 p.m. The following topics will be included on the agenda for January 16, 1981:

(1) Minutes of previous meetings.

(2) Presentation of BLM's Planning System.

(3) Public comment period.

(4) BLM Planning System and the Environmental Statement (ES).

(5) BLM Planning System and the Management Framework Plan (MFP).

The following topics will be included in the agenda for February 5, 1981:

(1) Minutes of previous meeting.

(2) Identification of Egan Resource Area Problems and Issues.

(3) Public comment period.

(4) Egan Resource Area Problems Issues, Alternatives and Proposed Solutions.

(5) Arrangements for the next meeting.

The meeting is open to the public. Written comments may be filed with the District Manager for the Council's Consideration, and oral statements will be heard between 3 p.m. and 3:30 p.m. at the meetings listed above. Depending on the number of persons wishing to make a statement, a per person time limit may be established by the District Manager.

Summary minutes of the meetings will be available for public inspection at the District Office within 30 days following the meetings.

DATE: January 16, 1981, 1 p.m. to 6 p.m.; February 5, 1981, 1 p.m. to 6 p.m.

ADDRESS: Bureau of Land Management, Star Route 5, Box 1, Ely, Nevada 89301.

FOR FURTHER INFORMATION CONTACT: Mr. Stephen Rynas, Planning Coordinator, Ely District Office, Star Route 5, Box 1, Ely Nevada 89301 (702/289-4865)

Dated: December 1, 1980.

Neil B. McCleery

District Manager.

[FR Doc. 80-38357 Filed 12-10-80; 8:45 am]

BILLING CODE 4310-84-M

Salt Lake District Office, Utah; Preparation of Box Elder County Resource Management Plan

AGENCY: Bureau of Land Management, Interior.

ACTION: Notice.

SUMMARY: Notice is hereby given in accordance with 43 CFR 1601.3 that the Salt Lake District Office is beginning a Resource Management Plan for public land in Boc Elder County, Utah. 1,051,114 acres of public land (30% of county total) plus an additional 125,000 acres of federal minerals underlying private surface will be encompassed by the plan.

Box Elder County is located in the northwestern corner of Utah. It is bordered on the north by Idaho and on the west by Nevada. Tooele County, Utah is to the south and Cache and Weber counties, Utah are to the east (Refer to map).

General land use issues such as livestock grazing, wildlife habitat, mineral development, recreation, land ownership adjustments, access and economics will be addressed in the plan.

An interdisciplinary team consisting of a Planning Coordinator, Range Conservationist, Wildlife Biologist, Fisheries Biologist, Soil Scientists, Outdoor Recreation Planner, Archaeologist, Realty Specialist, Geologist, Access Specialist, Socio-Economist and Public Information Specialist will develop the plan.

Public participation will occur during all six phases of the planning process. Activities will include letters, comment sheets. public information meetings, workbooks, small qroup workshops, field tours, interagency coordination meetings, Multiple Use Advisory Council meetings and Grazing Advisory Board meetings. These activities will be announced through state and local newspapers, local radio stations, individual letters and district monthly newsletters.

Public issue identification meetings will be held:

Date	Place	Time
January 6, 1981	Brigham City Community Center, 20 North 300 West, Brigham City, Utah.	7:00 p.m. p.m.
January 13, 1981	Snowville School Snowville, Utah.	7:00 p.m.
January 14, 1981	Park Valley School Park Valley, Utah.	7:00 p.m.
January 15, 1981	Grouse Creek School, Grouse Creek, Utah.	7:00 p.m.

Salt Lake District Manager, Frank Snell, can be contacted at the Salt Lake District Office, 2370 South 2300 West, Salt Lake City, Utah 84119 (810) 524-5348 during regular office hours, 7:30 a.m. to 4:30 p.m., for further information. All documents relevant to Box Elder County planning are available for public review at that address.

Dated: December 3, 1980.

Frank W. Snell,

District Manager.

[FR Doc. 80-38351 Filed 12-10-80; 8:45 am]

BILLING CODE 4310-84-M

INTERSTATE COMMERCE COMMISSION

Agricultural Cooperative; Commission Intent To Perform Interstate Transportation for Certain Nonmembers

Dated: December 8, 1980.

The following Notices were filed in accordance with section 10526(a)(5) of the Interstate Commerce Act. These rules provide that agricultural cooperative intending to perform nonmember, nonexempt, interstate transportation must file the Notice, Form BOP 102, with the Commission within 30 days of its annual meetings each year. Any subsequent change concerning officers, directors, and location of transportation records shall require the filing of a supplemental Notice within 30 days of such change. The name and address of the agricultural cooperative, the location of the records, and the name and address of the person to whom inquiries and correspondence should be addressed, are published here for interested persons. Submission of information that could have bearing upon the propriety of a filing should be directed to the Commission's Bureau of Investigations and Enforcement, Washington, D.C. 20423. The Notices are in a central file, and can be examined at the Office of the Secretary, Interstate Commerce Commission, Washington, D.C.

(1) Complete Legal Name Of Cooperative Association Or Federation Of Cooperative Associations: Agape Agricultural Association.

Principal Mailing Address (Street No., City, State, and Zip Code): P.O. Box 32160, Phoenix, AZ 85016.

Where Are Records Of Your Motor Transportation Maintained (Street No., City, State and Zip Code): 2144 E. Lamar Rd., Phoenix, AZ 85016.

Person To Whom Inquiries And Correspondence Should Be Addressed (Name and Mailing Address): David Robinson, P.O. Box 33152, Phoenix, AZ 85067.

(2) Complete Legal Name Of Cooperative Association Or Federation Of Cooperative Associations: Agway Inc.

Principal Mailing Address (Street No., City, State, and Zip Code): Box 4933, Syracuse, NY 13221.

Where Are Records Of Your Motor Transportation Maintained (Street No., City, State and Zip Code): 333 Butternut Drive, DeWitt, NY 13214.

Person To Whom Inquiries And Correspondence Should Be Addressed (Name and Mailing Address): R. E. Hallock, Box 4933, Syracuse, NY 13221.

(3) Complete Legal Name Of Cooperative Association Or Federation Of Cooperative Associations: Condor Agricultural Association.

Principal Mailing Address (Street No., City, State, and Zip Code): P.O. Box 599, Elmhurst, IL 60126.

Where Are Records Of Your Motor Transportation Maintained (Street No., City, State and Zip Code): 679 West North Avenue, Elmhurst, IL.

Person To Whom Inquiries And Correspondence Should Be Addressed (Name and Mailing Address): David Robinson, P.O. Box 33152, Phoenix, AZ 85067.

(4) Complete Legal Name Of Cooperative Association Or Federation Of Cooperative Associations: Dairylea Cooperative Inc.

Principal Mailing Address (Street No., City, State, and Zip Code): One Blue Hill Plaza, Pearl River, NY.

Where Are Records Of Your Motor Transportation Maintained (Street No., City, State and Zip Code): P.O. Box 395, Vernon, NY 13476.

Person To Whom Inquiries And Correspondence Should Be Addressed (Name and Mailing Address): Frank Reile, P.O. Box 395, Vernon, NY 13476.

(5) Complete Legal Name Of Cooperative Association Or Federation Of Cooperative Associations: Southern Farmers Cooperative Association.

Principal Mailing Address (Street No., City, State, and Zip Code): 181 N.E. 82nd Street, Little River, Miami, FL 33138.

Where Are Records Of Your Motor Transportation Maintained (Street No., City, State and Zip Code): 18 Hackensack Ave., Kearny, NJ 07302.

Person To Whom Inquiries And Correspondence Should Be Addressed (Name and Mailing Address): Marlene Kelley, 18 Hackensack Ave., Kearny, NJ 07302.

Agatha L. Mergenovich,

Secretary.

[FR Doc. 80-38373 Filed 12-10-80; 8:45 am]

BILLING CODE 7035-01-M

[Finance Docket No. 29516]

Atlantic Pacific Railway Corporation—Purchase (Portion)—Chicago, Rock Island and Pacific Railroad Company, Debtor (William M. Gibbons, Trustee) in Iowa, Nebraska and Illinois; Application

AGENCY: Interstate Commerce Commission.

ACTION: Application accepted for consideration.

SUMMARY: The Commission is accepting for consideration the application of Atlantic Pacific Railway Corporation to purchase certain properties of the Chicago, Rock Island and Pacific Railroad Company, Debtor (William M. Gibbons, Trustee), located in Iowa, Nebraska, and Illinois. The Commission is also setting a schedule for the application to be completed and for the filing of pleadings.

DATES: (1) By December 12, 1980 the application shall be completed. In addition, all applications to acquire the same lines sought in this application must be filed by this date.

(2) By December 22, 1980 verified statements supporting or opposing the proposal must be filed.

(3) By January 6, 1980 verified statements in reply must be filed.

ADDRESSES: An original and 10 copies of all statements should be sent to: Section of Finance, Room 5414, Interstate Commerce Commission, Washington, D.C. 20423, Attention: RITEA acquisitions.

FOR FURTHER INFORMATION CONTACT: Louis E. Gitomer, (202) 275-7026.

SUPPLEMENTAL INFORMATION: The Atlantic Pacific Railway Corporation (Atlantic-Pacific) has tendered a copy of an application that it filed on August 15, 1980 with the Office of Federal Assistance, Federal Railroad Administration to purchase a portion of the Chicago, Rock Island and Pacific Railroad Company, Debtor (William M. Gibbons, Trustee) (Rock Island) line. Although this application does not comport completely with the requirements of our rules, it contains the essential information and therefore will be accepted for consideration.

The application will be handled under the rules adopted in Ex Parte No. 282 (Sub-No. 4), *Acquisition Procedures for Lines of Railroads,* 360 I.C.C. 623 (1980), 45 FR 6107 (January 25, 1980). Atlantic-Pacific must file a complete application responding to the requirements of the rules noted above by December 12, 1980.

Atlantic-Pacific seeks to acquire the following Rock Island track:

	Route miles
1. *Main Track* (Council Bluffs, IA/Omaha Terminus, NE, South Chicago Terminus, IL):	
Co Bluffs, IA (UP Tfr)-Joliet, IL	449.8
So. Chicago Line Jct.-So. Chicago-CRI&P Jct., IL	5.0
So. Chicago-Kensington-Chicago Regional Port District, IL	5.7
West Liberty, IA-Cedar Rapids, NE	36.7
West Davenport, IA-Fruitland, IA	31.7
Bureau, IL-Peoria, IL	45.8
	574.7
2. *Branch Lines:*	
B-I Avoca, NE-Hancock, IA-Oakland, IA	12.3
B-II Atlantic, IA-Audubon, IA	24.4
B-III Winear, IA-Winterset, IA	12.3
B-IV Altoona, IA-Pella, IA	35.9
B-V Iowa City, IA-Hills, IA	7.2
B-VI West Davenport, IA-Clinton, IA	35.3
B-VII Colona, IL-Lafayette, IL	40.0
	167.4
3. Total: Main Line and Branch Lines	742.1

A copy of all comments and requests for copies of the application should be addressed to: Paul E. Pellett, 603 West Second Street, Atlantic, IA 50022.

It is ordered:

1. The application in Finance Docket No. 29516 is accepted for consideration.

2. The parties shall comply with all provisions stated above.

3. This decision shall be effective on Dec. 5, 1980.

Dated: December 4, 1980.

By the Commission, Chairman Gaskins, Vice Chairman Gresham, Commissioners Clapp, Trantum, Alexis and Gilliam.

Agatha L. Mergenovich,

Secretary.

[FR Doc. 80-38376 Filed 12-10-80; 8:45 am]

BILLING CODE 7035-01-M

[Docket No. AB-6 (Sub-No. 84F)]

Burlington Northern Inc.—Abandonment—Near Cotter and Carrollton in Carroll County, Mo; Findings

Notice is hereby given pursuant to 49 U.S.C. 10903 that by a Certificate and Decision decided December 4, 1980, a finding, which is adminstratively final, was made by the Commission, Review Board Number 5, stating that, subject to the conditions for the protection of railway employees prescribed by the Commission in *Oregon Short Line R. Co.—Abandonment Goshen,* 360 I.C.C. 91 (1979), and further that applicant shall keep intact all of the right-of-way underlying the track, including all the bridges and culverts for a period of 120 days from the decided date of the certificate and decision to permit any state or local government agency or other interested party to negotiate the acquisition for public use of all or any portion of the right-of-way, the present and future public convenience and necessity permit the abandonment by the Burlington Northern Inc. of its line of railroad known as the Cotter to Carrollton line extending from railroad milepost 209.11 near Cotter, MO, to railroad milepost 220.91 at the end of the line near Carrollton, MO, a distance of 11.80 miles, in Carroll County, MO. A certificate of public convenience and necessity permitting abandonment was issued to the Burlington Northern Inc. Since no investigation was instituted, the requirement of Section 1121.38(a) of the Regulations that publication of notice of abandonment decisions in the Federal Register be made only after such a decision becomes administratively final was waived.

Upon receipt by the carrier of an actual offer of financial assistance, the carrier shall make available to the offeror the records, accounts, appraisals, working papers, and other documents used in preparing Exhibit I (Section 1121.45 of the Regulations). Such documents shall be made available during regular business hours at a time and place mutually agreeable to the parties.

The offer must be filed with the commission and served concurrently on the applicant, with copies to Ms. Ellen Hanson, Room 5417, Interstate Commerce Commission, Washington, DC 20423, no later than December 22, 1980. The offer, as filed, shall contain information required pursuant to Section 1121.38(b)(2) and (3) of the Regulations. If no such offer is received, the certificate of public convenience and necessity authorizing abandonment

shall become effective 30 days from the service date of the certificate.

Agatha L. Mergenovich,

Secretary.

[FR Doc. 80-38370 Filed 12-10-80; 8:45 am]

BILLING CODE 7035-01-M

[Docket No. AB-43 Sub-No. 73F]

Illinois Central Gulf Railroad Company—Abandonment—Over Tracks of Chicago and North Western Transportation Company in Madison County, Ill.; Findings

Notice is hereby given pursuant to 49 U.S.C. 10903 that by a Certificate and Decision decided December 5, 1980, a finding, which is administratively final, was made by the Commission, Review Board Number 5, stating that, subject to the conditions for the protection of railway employees prescribed by the Commission in *Oregon Short Line R. Co.—Abandonment Goshen*, 360 I C.C. 91 (1979), the present and future public convenience and necessity permit the abandonment of operations under trackage rights over tracks of the Chicago and North Western Transportation Company extending from railroad milepost 276.42 near Glen Carbon, IL, to milepost 285.90 at Madison, IL, in Madison County, IL. A certificate of public convenience and necessity permitting the abandonment was issued to the Illinois Central Gulf Railroad Company. Since no investigation was instituted, the requirements of Section 1121.38(a) of the regulations that publication of notice of abandonment decisions in the Federal Register be made only after such a decision becomes administratively final was waived.

Upon receipt by the carrier of an actual offer of financial assistance, the carrier shall make available to the offeror the records, accounts, appraisals, working papers, and other documents used in preparing Exhibit I (Section 1121.45 of the Regulations). Such documents shall be made available during regular business hours at a time and place mutually agreeable to the parties.

The offer must be filed with the Commission and served concurrently on the applicant, with copies to Ms. Ellen Hanson, Room 5417, Interstate Commerce Commission, Washington, DC 20423, no later than December 22, 1980. The offer, as filed, shall contain information required pursuant to Section 1121.38(b)(2)(3) of the Regulations. If no such offer is received, the certificate of public convenience and necessity authorizing abandonment shall become effective 30 days from the service date of the certificate.

Agatha L. Mergenovich,

Secretary.

[FR Doc. 80-38371 Filed 12-10-80; 8:45 am]

BILLING CODE 7035-01-M

[Ex Parte No. 285]

Maintenance of Records Pertaining to Demurrage, Detention and Other Related Accessorial Charges by Rail Common Carrier of Property

AGENCY: Interstate Commerce Commission.

ACTION: Notice of adoption of order granting Missouri-Kansas-Texas Railroad Company (MKT) a three-year exemption from compliance with 49 CFR 1254.03(k).

SUMMARY: MKT filed a petition on April 21, 1980, seeking a three-year exemption from compliance with 49 CFR 1254.03(k) requiring the maintenance of certain records and bills pertaining to demurrage, detention, and other related accessorial charges by railroads. Comments were sought by notice in the Federal Register at 45 FR 50952. After evaluating the petition and comments, the Commission orders an exemption, the terms of which are discussed in further detail in the supplementary information section of this notice.

DATE: This order will become effective December 11, 1978.

FOR FURTHER INFORMATION CONTACT: Richard B. Felder or Jane Mackall (202) 275-7656

SUPPLEMENTARY INFORMATION: Missouri-Kansas-Texas Railroad Company (MKT) seeks [1] a three-year exemption from compliance with our regulations at 49 CFR § 1254.03(k). SRI Inc. filed comments in support of the proposed exemptions. A comment was also received from the Atchison, Topeka and Santa Fe Railroad Company (Santa Fe).

These regulations, 352 I.C.C. 739, 784 (1976), among other things, require carriers to retain copies of their bills at central points.[2] MKT seeks a waiver to enable it to develop and implement a cost-efficient method of compliance.

Under its present record-keeping system, MKT does not have central billing and accounting points. Rather, it maintains its freight bills in a Customer Accounting Bureau at Denison, TX, but keeps demurrage and other accessorial records at local stations. For MKT to consolidate all records at a central location, each station would have to send copies of all documents and bills to Denison. This procedure, it contends, would involve additional costs and administrative burdens.

During the three year transition period, MKT proposes to furnish, upon written request, copies of the involved records to all interested parties. MKT asserts that its experience indicates that only Commission employees have sought to see them.

SRI provides advisory and management services to clients which ship thousands of carloads of grain along the Oklahoma Kansas Texas Railroad, a subsidiary of the MKT. SRI is satisified with the assurances of MKT that copies of the involved records will be furnished upon written request to all interested parties. It views the record transfer as unnecessary and economically unjusted.

Santa Fe supports the MKT request and states that compliance would be costly and burdensome on the railroad industry. If the Commission grants the relief sought by the MKT the Santa Fe states that it will file a similar petition. In this regard, we would point out that we intend shortly to begin review of these rules to determine if they continue to be in the public interest.

MKT has presented sufficient reasons to warrant our waiving rule 1254.03(k) for a three-year period while it develops and implements a centralized record-keeping system and we review all these rules. During this interim period, MKT will, upon request, promptly furnish to interested parties copies of the relevant records.

This action will not significantly affect the quality of the human environment or conservation of energy resources.

It is ordered:

The Missouri-Kansas-Texas Railroad Company is granted exemption, for a period of three (3) years, from the provisions of 49 CFR 1254.03(k), to the extent that:

Car movement waybills and freight bills for transportation charges, and for such other charges as are normally assessed on the original freight bill for transportation charges, may be retained

---

[1] The petition was filed April 21, 1980. comments were sought by notice in the Federal Register (45 FR 50952).

[2] Rule 1254.03(k)

(k) *Preparation of bills at central points.* When carriers prepare bills of freight charges, demurrage, detention, storage, switching, refrigeration, weighing inspection, car rentals, stopoff, reconsigning, diversion, loading, or other accessorial services, or where carriers grant special allowances to shippers subject to tariff provisions lawfully in effect, at central billing or accounting points, copies of such bills or allowance shall be maintained by the carriers, and shall be available for inspection, at the same location at which are also maintained all other reports and records required to be made and maintained this part.

at locations, designated by the Missouri-Kansas-Texas Railroad Company, which are different from those where supporting records for those charges are retained.

The supporting records for transportation charges shall continue to be retained at the locations at which bills and supporting documents for charges and services, other than shown on the original freight bill, are returned.

This proceeding is discontinued.

Decided: November 21, 1980.

By the Commission, Chairman Gaskins, Vice Chairman Gresham, Commissioners Clapp, Trantum, Alexis, and Gilliam.

Agatha L. Mergenovich,

Secretary.

[FR Doc 80-38374 Filed 12-11-80; 8:45 am]

BILLING CODE 7035-01-M

[Finance Docket No. 29156]

McHugh Brothers Heavy Hauling, Inc.—Control—New Hope and Ivyland Railroad Company

Decided: December 1, 1980.

On October 5, 1979, McHugh filed a petition, indicating that it had exercised its option to purchase the capital stock of the NH&I, a short line railroad in Bucks County, PA, and requested a waiver of certain requirements of the *Railroad Acquisition, Control, Merger, Coordination Project, Trackage Rights and Lease Procedures,* 49 CFR Part 1111 (1979).[1]

In considering the nature of the proposed transaction and the waiver requests, the Commission concluded *inter-alia* that the application proposed to be filed would merely report a change in the type of control from lease to ownership, something that it was aware of when the earlier lease was considered. Accordingly, it decided to initiate a proceeding under 49 U.S.C. § 10505 to exempt the proceeding. A notice of the proposed exemption was first published in the Federal Register on February 5, 1980 (45 FR 7876) and was republished on February 20, 1980 (45 FR 11200). No comments in opposition were filed by shippers or receivers, but a number of comments were filed by residents which raised environmental questions.

Essentially, the opposition was contained in the verified statements of certain residents of the Village of Wycombe, PA, and letters filed by the Solebury Township Board of Supervisors and the Buckingham Township Board of Supervisors. The general tenor of the opposition was that McHugh operating under its current lease, has interfered with the historical setting of the Village of Wycombe, has created safety hazards and excessive noise levels and will continue to do these things after it acquires the NH&I capital stock. The residents of Wycombe allege that McHugh has changed the nature of previous operations over the NH&I in the following ways: (1) it is operating a large fleet of freight cars to obtain per diem rentals; (2) it is leasing land and facilities to North American Car Corporation for repair of NACC rolling stock; and (3) it is using the property for storage of heavy equipment from its heavy hauler operations. These activities are said to be converting Wycombe from an agricultural residential village into an industrial center.

The residents further allege that Buckingham Township has firm land use controls that are actively enforced. The township has expressed its disapproval of McHugh's activities, but McHugh's operation of a railroad is evidently beyond the township's enforcement power. For this reason, the local authorities and residents have filed a complaint with the Pennsylvania Public Utilities Commission. The have also asked the ICC to take no further action until the PPUC completes its study.

NEPA requires that for each major Federal action significantly affecting the quality of the human environment, the Agency must prepare an environmental impact statement of the proposed action.

Under Commission procedures, the vehicle for consideration of environmental matters in the original instance is the application itself. See 49 CFR § 1108.6, *et seq.* However, under the 49 U.S.C. § 10505 procedure no application is contemplated. Therefore in order to make a NEPA judgement, Gary J. Edles, Director, Office of Proceedings issued his June 16th decision. That decision propounded a series of questions to McHugh concerning its operation and the effect on the environment, and also designated a schedule for responses and replies. On June 27, 1980, McHugh filed a petition for reconsideration. A responsive pleading was filed on July 9, 1980.

McHugh points out that the environmental questions raised are wholly of a local nature, many of which are presently being considered by the Pennsylvania Public Utilities Commission (PUC). Examples of concern include storage tracks, industrial, team, switching, or side tracks, yard activities, and improvement of a right-of-way and road bed wholly within the State of Pennsylvania. It points out that although the Commission's jurisdiction may extend to such activities, traditionally it has not sought to regulate in these areas and should not do so here. McHugh answered many of the Commission's questions.

Although not articulated by McHugh, on the basis of the pleadings before us we have no information that the National Historic Preservation Act or the regulations promulgated thereunder would be violated by consummation of this transaction. The residents of Wycombe, however, have not suggested that their city nor any parts thereof, including the railroad station, have been made eligible for inclusion in the National Register of Historic Places.

The Wycombe residents point out that McHugh has not answered all of the Commission's questions and should be required to do so.

On the one hand, we are not completely satisfied that applicant has answered every question asked. For example, we are unable to make a determination on the noise impacts because we have no information as to the number of present or future operations occurring at the Wycombe site. A relatively small increase in operations (e.g. switching movements, hours of service, and/or number of trains on the line) can cause disproportionate physical impacts. A locomotive and five cars moving over a line at a speed of 10 miles an hour twice a day and once at night may yield, depending on the distance from this source, noise levels in excess of that deemed acceptable for rural residential areas. We also are somewhat concerned about the effect of the proposed operation on potentially historic structures in the area. In addition, we recognize that consistency with the spirit of local land use regulations is an important environmental concern.

On the other hand, PPUC is considering a complaint against McHugh which may receive many of the local environmental questions raised. Moreover, the noise level questions are

---

[1] This proceeding had its origin in Finance Docket No. 27971, *McHugh Brothers Heavy Hauling, Inc.-Lease and Operate-New Hope and Ivyland, Railroad Company.* On August 5, 1975 McHugh filed an application to lease and operate for 3 years 16.7 miles of NH&I truck from New Hope to Ivyland Borough, Bucks County, PA. The lease gave McHugh an option to purchase the NH&I capital stock which the Commission was aware of when it approved the lease.

Pursuant to staff inquiry concerning environmental considerations, McHugh advised the Commission that the lease "will not result in any effect on the quality of the human environment." In it's decision of March 9, 1977 approving the lease, former Division 3 of the Commission found that its decision was not a major Federal action significantly affecting the quality of the human environment within the meaning of the National Environmental Policy Act of 1969 (NEPA). The lease was consummated on June 1, 1979.

matters essentially within the jurisdiction of the United States Environmental Protection Agency (EPA) and the Federal Railroad Agency (FRA). We note that EPA's current regulations do not preclude yard activities resulting in excessive noise levels. See Proposed Rulemaking in Rail Carrier Docket ONAC 80-01. However, if noise level regulations now under consideration by EPA are finally adopted, then yard activities such as complained of here, may require mitigation by McHugh.

Regarding the potential historic places in the Wycombe area we note that if the Wycombe depot is eligible for inclusion in the National Register of Historic Places, McHugh may have certain obligations. However, the question is properly one for the Advisory Council on Historic Preservation. Finally, the whole question of appropriate land use is one that should be decided in the first instance by the local and State authorities.

Instead of continuing to hold this matter in abeyance the resolution of local environmental questions, and questions which could best be resolved by other agencies of government, we will condition this exemption on McHugh's adhering to the final decisions of all local, State, and Federal agencies regarding matters properly within their jurisdiction concerning various aspects of the environment. If McHugh fails to conform its operations to the requirements of these authorities, we will entertain a petition to revoke the exemption and to undertake an investigation concerning the lawfulness of McHugh's continuation in control of the NH&I. With this condition, we conclude that our present grant of the exemption is not a major Federal action significantly affecting the environment within the meaning of NEPA.

In accordance with the general rule that administrative agencies are required to apply the law in effect at the time of the decision, the exemption proceeding is now governed by 49 U.S.C. 10505, as amended by Section 213 of the Staggers Rail Act of 1980, Pub. L. No. 96-448 (1980). See *Ziffrin, Inc.* v. *United States*, 318 U.S. 73, 78 (1943) and *Art Pape Transfer, Inc. Ext-Commod., in End Dump Vehicles*, 132 M.C.C. 84 (1980). As pertinent here, new section 10505 provides that the Commission shall exempt a transaction when it finds that filing of an application "(1) * * * is not necessary to carry out the transportation policy of section 10101a of the title; "(2) * * * the transaction or service is of limited scope . . ."

Section 10101a(8) provides that the policy of the United States Government is to encourage operation of transportation facilities and equipment without detriment to the public health and safety. As hereinafter conditioned, McHugh must operate its transportation facilities and equipment without detriment to the public health and safety.

The transaction is limited in scope. The trackage itself is only 18 miles in length (the original length of the NH&I was 16.7 miles and 1.3 miles were designated to the railroad by the United States Railway Association. As noted, McHugh already operates the NH&I through a Commission approved lease. The legal distinction between control via lease and control via stock purchase is not substantial. Finally, all the parties, McHugh, Bucks County Industrial Development Corporation (current owner of the NH&I stock) and the opposing residents are situated within the same locality. Thus, we conclude that the scope of the transaction is limited. Since we conclude the transaction is of a limited scope, we need not determine whether regulation is necessary to protect shippers from the abuse of market power.

Labor Protection. In granting an exemption under section 10505, the Commission may not relieve a carrier of its obligation to protect the interests of employees as otherwise required by 49 U.S.C., subtitle IV. See 49 U.S.C. § 10505(g)(2). We have determined that the employee protective provisions developed in *New York Dock Ry.—Control—Brooklyn Eastern Dist.*, 360 I.C.C. 60 (1979), satisfy the statutory requirements for protection of employees involved in purchase transactions under 49 U.S.C. § 11343. Accordingly, these protective provisions will be imposed here.

Prior criteria. In addition to meeting the criteria of section 10505, as amended, this proposal also meets the criteria of former section 10505. we have already indicated that this transaction is of limited scope. Furthermore, the discussion relating to 49 U.S.C. § 10101a also applies to the National Transportation Policy of 49 U.S.C. § 10101. Finally, because of the transactions limited scope, our regulation transaction would serve little or no useful public purpose.

We find:

(1) As hereinafter conditioned, the application of the requirements of 49 U.S.C. § 11143-11347 to the proposed transaction is not necessary to carry out the transportation policy of section 10101a.

(2) The above transaction is of a limited scope.

(3) This decision will not: (a) operate to relieve any rail carrier from an obligation to provide contractual terms for liability and claims which are consistent with the provisions of 49 U.S.C. § 11707; (b) authorize intermodel ownership that is otherwise prohibited; or (c) relieve a carrier of its obligation to protect the interests of its employees as required by 49 U.S.C., Subtitle IV.

(4) As conditioned this action will not significantly affect either energy consumption or the quality of the human environment.

It is ordered:

(1) The petition for reconsideration filed by McHugh Brothers Heavy Hauling, Inc., on June 27, 1980 is granted.

(2) McHugh Brothers Heavy Hauling, Inc. and New Hope and Ivyland Railroad Company are exempted under 49 U.S.C. § 10505 from the requirements of 49 U.S.C. § 11343-11347 for the transaction described above, provided that McHugh will adhere to every final decision of government agencies, local, state and Federal concerning environmental impacts, both from its current operations and operations that will occur as a result of its purchase of the NH&I stock.

(3) The grant of this exemption is consistent with the conditions for the protection of employees involved in *New York Dock Ry-Control-Brooklyn Eastern Dist., supra.*

(4) If the authority is exercised, McHugh Brothers Heavy Hauling, Inc. shall within 60 days thereafter submit three copies of a sworn statement showing all general entries required to record the transaction.

(5) This exemption will continue in effect for one year from the effective date of this decision. The parties must consummate this transaction during that time in order to take advantage of the exemption we have granted.

(6) This decision shall be effective on December 9, 1980.

By the Commission, Chairman Gaskins, Vice Chairman Gresham, Commissioners Clapp, Trantum, Alexis, and Gilliam.

Agatha L. Mergenovich,

Secretary.

[FR Doc. 80-38375 Filed 12-10-80; 8:45 am]

BILLING CODE 7035-01-M

Permanent Authority Decisions; Decision-Notice

The following applications, filed on or after July 3, 1980, are governed by Special Rule 247 of the Commission's Rules of Practice, see 49 CFR 1100.247. Special rule 247 was published in the Federal Register on July 3, 1980, at 45 FR 45539. Persons wishing to oppose an application must follow the rules under 49 CFR 1100.247(B). Applications may be

protested *only* on the grounds that applicant is not fit, willing, and able to provide the transportation service and to comply with the appropriate statues and commission regulations. A copy of any application, together with applicant's supporting evidence, can be obtained from any applicant upon request and payment to applicant of $10.00.

Amendments to the request for authority are not allowed. Some of the applications may have been modified prior to publication to conform to the Commission's policy of simplifying grants of operating authority.

Findings: With the exception of those applications involving duly noted probems (e.gs., unresolved common control, fitness, water carrier dual operations, or jurisdictional questions) we find, preliminarily, that each applicant has demonstrated its proposed service warrants a grant of the application under the governing section of the interstate Commerce Act. Each applicant is fit, willing, and able to perform the service proposed, and to conform to the requirements of Title 49, Subtitle IV, United States Code, and the commission's regulations. Except where noted, this decision is neither a major Federal action significantly affecting the quality of the human environment nor a major regulatory action under the Energy Policy and Conservation Act of 1975.

In the absence of legally sufficient protests in the form of verified statements filed within 45 days of publication of this decision notice (or, if the application later becomes unopposed) appropriate authority will be issued to each applicant (except those with duly noted problems) upon compliance with certain requirements which will be set forth in a notice that the decision-notice is effective. Within 60 days after publication an applicant may file a verified statement in rebuttal to any statement in opposition.

To the extent that any of the authority granted may duplicate an applicant's other authority, the duplication shall be construed as conferring only a single operating right.

Note.—All applications are for authority to operate as a motor common carrier in interstate or foreign commerce over irregular routes, unless noted otherwise. Applications for motor contract carrier authority are those where service is for a named shipper "under contract".

Volume No. OP1-093

Decided: December 3, 1980.

By the Commission, Review Board Number 3, Members Parker, Fortier and Hill. Member Hill not participating in part.

MC 74321 (Sub-159F), filed November 25, 1980. Applicant: B. F. WALKER, INC., 1555 Tremont Place, P.O. Box 17-B Denver, CO 80217.Representative: Richard P. Kissinger, Steele Park, Suite 330, 50 South Steel Street, Denver, CO 80209. Transporting *shipments weighing 100 pounds or less* if transported in a motor vehicle in which no one package exceeds 100 pounds, between points in the U.S.

MC 123980 (Sub-6F), filed November 19, 1980. Applicant: MANDUS R. OLSON, 12589 Hanson Blvd., N.W., Anoka, MN 55303. Representative: Edward A. O'Donnell, 1004 29th St., Sioux City, IA 51104 Transporting *food and other edible products* (including edible byproducts but excluding alcoholic beverages and drugs) *intended for human consumption, agricultural limestone and other soil conditioners,* and *agricultural fertilizers,* if such transportation is provided with the owner of the motor vehicle in such vehicle, except in emergency situations, between points in the U.S.

MC 146570 (Sub-3F), filed November 25, 1980. Applicant: DIAMOND TRANSPORTING, INC., 5797 North Tryon St., Charlotte, NC 28213. Representative: Paul D. Borghesani, Suite 300, Communicana Bldg., 421 So. Second St., Elkhart, IN 46516. Transporting *general commodities* (except used household goods, hazardous or secret materials, and sensitive weapons and munitions), for the United States Government, between points in the U.S.

MC 152230F, filed October, 15 1980. Applicant: THEODORE F. MILLER, 36 W. Eighth Street, Bloomsburg, PA 17815 Representative: Theodore F. Miller (same address as applicant). Transporting *food and other edible products (including edible byproducts but excluding alcoholic beverages and drugs) intended for human consumption, agricultural limestone and other soil conditioners, and agricultural fertilizers,* if such transportation is provided with the owner of the motor vehicle in such vehicle, except in emergency situations, between points in the U.S.

MC 152770F, filed November 16, 1980. Applicant: EARL REEVES, P.O. Box 203, Morley, MO 63767. Representative: Earl Reeves (same address as applicant). Transporting *food and other edible products (including edible byproducts but excluding alcoholic beverages and drugs) intended for human consumption, agricultural limestone and other soil conditioners, and agricultural fertilizers,* if such transportation is provided with the owner of the motor vehicle in such vehicle, except in emergency situations, between points in the U.S.

MC 152811F, filed November 16, 1980. Applicant: CAMPBELL COMPANY OF IDAHO (C.C.I.), Kimberly Road & Deere St, Twin Falls, ID 83301. Representative: John B. Campbell (same address as applicant). As a *broker,* at Twin Falls, ID, in arranging for the transportation of *general commodities* (except household goods), between points in the U.S.

MC 152880F, filed November 20, 1980. Applicant: AMERICAN MESSENGER SERVICE, INC., 709 S.W. Ankeny, Portland, OR 97205. Representative: Mark Lewis Wheeler (same address as applicant). Transporting *shipments weighing 100 pounds or less,* if transported in a motor vehicle in which no one package exceeds 100 pounds, between points in the U.S.

MC 152891 (Sub-1F), filed November 28, 1980. Applicant: WALES TRUCKING, INC., P.O. Box 1156, Apopka, FL 32703. Representative: James E. Wharton, Suite 811, Metcalf Bldg., 100 South Orange Ave., Orlando, FL 32801.Transporting *general commodities* (except used household goods, hazardous or secret materials, and sensitive weapons and munitions), for the United States Government, between points in the U.S.

MC 152920F, filed November 25, 1980. Applicant: R. & R.T., INC. d.b.a. R & R TRUCKING, P.O. Box 22724, St. Louis, MO 63147. Representative: Wayne E. Klinckhardt, 378 Scenic Dr., St. Louis, MO 63137. As a *broker,* at St. Louis, MO, in arranging for the transportation of *general commodities* (except household goods), between points in the U.S.

MC 152921F, filed November 28, 1980. Applicant: HOU-TEX TRANSPORTATION, INC., P.O. Box 38591, Houston, TX 77088. Representative: Clayte Binion, 1108 Continental Life Bldg., Fort Worth, TX 76102. Transporting *general commodities* (except used household goods, hazardous or secret materials, and sensitive weapons and munitions), for the United States Government, between points in the U.S.

Volume No. OP1-095

Decided: Dec. 4, 1980.

By the Commission, Review Board Number 3, Members Parker, Fortier and Hill. Member Hill not participating.

MC 138741 (Sub-120F), filed December 1, 1980. Applicant: AMERICAN CENTRAL TRANSPORT, INC., 2005 North Broadway, Joliet, IL 60435. Representative: Tom B. Kretsinger, 20 East Franklin, Liberty, MO 64068. Transporting *general commodities*

(except used household goods, hazardous or secret materials, and sensitive weapons and munitions), for the United States Government, between points in the U.S.

MC 152911F, filed November 25, 1980. Applicant: ROGERS & BROWN CUSTOM BROKERS, 2 Cumberland St., Charleston, SC 29401. Representative: Don Brown (same address as applicant). *As a broker* at Charleston, SC, in arranging for the transportation of *general commodities* (except household goods), between points in the U.S.

Volume No. OP2-112

Decided: Dec. 1, 1980.

By the Commission, Review Board Number 3, Members Parker, Fortier and Hill.

MC 115703 (Sub-23F), filed November 17, 1980. Applicant: KREITZ MOTOR EXPRESS, INC., 220 Park Road North, P.O. Box 375, Wyomissing, PA 19610. Representative: Robert D. Gunderman, Suite 710 Statler Bldg., Buffalo, NY 14202. Transporting *general commodities* (except used household goods, hazardous or secret materials, and sensitive weapons and munitions) for the United States Government, between points in the U.S.

Volume No. OP2-114

Decided: Dec. 4, 1980.

By the Commission, Review Board Number 1, Members Carleton, Joyce and Jones.

MC 13253 (Sub-4F), filed November 17, 1980. Applicant: STEUBENVILLE TRANSFER CO., a corporation, Two Ridge Rd., P.O. Box 2248, Wintersville, OH 43952. Representative: Andrew Jay Burkholder, 275 East State St., Columbus, OH 43215. Transporting *general commodities* (except used household goods, hazardous or secret materials, and sensitive weapons and munitions), for the United States Government, between points in the U.S.

MC 151693 (Sub-4F), filed November 25, 1980. Applicant: SPECIAL SERVICE DELIVERY COMPANY, INC., 2514 Bridge Ave., Cleveland, OH 44113. Representative: David A. Turano, 100 E. Broad St., Columbus, OH 43215. Transporting *shipments weighing 100 pounds or less,* if transported in a motor vehicle in which no one package exceeds 100 pounds, between points in the U.S.

MC 152763F, filed November 16, 1980. Applicant: EXPRESSCO, INC., 105 Rhine St., Madison, TN 37115. Representative: Roland M. Lowell, 618 United American Bank Bldg., Nashville, TN 37219. Transporting *general commodities* (except used household goods, hazardous or secret materials, and sensitive weapons and munitions), for the U.S. Government, between points in the U.S.

MC 152783F, filed November 18, 1980. Applicant: C & J TRANSPORTATION BROKERS, INC., MRC 156 Bangor, ME 04401. Representative: R. Emery Clark, 366 Executive Bldg., 1030 15th St., NW, Washington, DC 20005. As a *broker,* to arrange for the transportation of *general commodities* (except household goods), between points in the U.S.

Volume No. OP4-149

Decided: December 5, 1980.

By the Commission, Review Board Number 3, Members Parker, Fortier and Hill. Member Hill not participating.

MC 129537 (Sub-51F), filed November 29, 1980. Applicant: REEVES TRANSPORTATION CO., a Florida corporation, Rt. 5, Dew's Pond Rd., Calhoun, GA 30701. Representative: John C. Vogt, Jr., 406 N. Morgan St., Tampa, FL 33602. Transporting *general commodities* (except used household goods, hazardous or secret materials, and sensitive weapons and munitions), for the United States Government, between points in the U.S.

MC 144407 (Sub-26F), filed November 28, 1980. Applicant: DECKER TRANSPORT COMPANY, INCORPORATED, 96 Route 23, Riverdale, NJ 07457. Representative: George A. Olsen, P.O. Box 357, Gladstone, NJ 07934. Transporting *general commodities* (except used household goods, hazardous or secret materials, and sensitive weapons and munitions), for the United States Government, between points in the U.S.

MC 152926F, filed November 29, 1980. Applicant: D & D TRUCKING, INC., 9534 W. Williams St., Rosemont, IL 60018. Representative: Irwin D. Rozner, 134 N. LaSalle St., Chicago, IL 60602. Transporting *shipments weighing 100 pounds or less* if transported in a motor vehicle in which no one package exceeds 100 pounds, between points in the U.S.

Volume No. OP4-150

Decided: December 5, 1980.

By the Commission, Review Board Number 3, Members Parker, Fortier and Hill. Member Hill not participating.

MC 59117 (Sub-79F), filed November 26, 1980. Applicant: ELLIOTT TRUCK LINE, INC., P.O. Box 1, Vinita, OK 74301. Representative: Tom B. Kretsinger, 20 East Franklin, Liberty, MO 64068. Transporting *fertilizer, and fertilizer solutions, compounds, ingredients and materials, dry urea and urea compounds, feed and feed ingredients, ammonium nitrate, anhydrous ammonia, acids, pesticides, minerals and mineral mixtures,* between points in AR, CO, KS, IL, IA, LA, MN, MO, NE, NM, OK, SD, TN, TX, and WI.

MC 61166 (Sub-4F), filed November 3, 1980. Applicant: PEARSON TRUCKING & RIGGING, INC., 13105 Lakeland Rd., Santa Fe Springs, CA 90670. Representative: Robert Fuller, 13215 E. Penn St., Suite 310, Whittier, CA 90602. Transporting (1) *general commodities* (except classes A and B explosives), between points in CA, and (2) *commodities which require special equipment because of size or weight; machinery and machinery parts; electrical and computer equipment; used plant and office equipment, records and supplies; bridge builders, contractors or graders outfits; iron or steel articles; and contraction or highway and bridge building, mining or milling, oilfield or geothermal, refinery or refractory, and pipeline machinery, materials, equipment and supplies,* between points in AZ, CA, CO, ID, MT, NM, NV, OR, TX, UT, WA and WY. Condition: Issuance of a certificate in this proceeding is subject to prior or coincidental cancellation, at applicant's written requests of its Certificated authority under MC 61166 and its Certificate of Registration in MC 61166 (Sub-No. 3).

MC 79687 (Sub-37F), filed November 28, 1980. Applicant: WARREN C. SAUERS COMPANY, INC., 200 Rochester Rd., Zelienople, PA 16063. Representative: Henry M. Wick, Jr., 2310 Grant Bldg., Pittsburgh, PA 15219. Transporting (1) *foodstuffs,* and (2) *materials, equipment, and supplies* used in the manufacture and distribution of foodstuffs, between points in Clarion County, PA, Medina and Wayne Counties, OH, and Shelby County, TN, on the one hand, and, on the other, points in CT, DE, IL, IN, KY, MD, MA, NJ, NY, PA, TN, VA, and WV.

MC 96607 (Sub-22F), filed November 28, 1980. Applicant: RUCKER BROTHERS TRUCKING, INC., 1820 Stewart St. E., Tacoma, WA 98421. Representative: Michael D. Duppenthaler, 211 S. Washington St., Seattle, WA 98104. Transporting (1) *metal and metal products* and *building materials,* and (2) *equipment and supplies* used in the manufacture and distribution of the commodities in (1) above, between points in AZ, CA, CO, ID, MT, NM, NV, OR, UT, WA, and WY.

MC 136786 (Sub-237F), filed November 28, 1980. Applicant: ROBCO TRANSPORTATION, INC., P.O. Box 10375, Des Moines, IA 50310. Representative: Larry D. Knox, 600

Hubbell Bldg., Des Moines, IA 50309. Transporting *electrical meters,* between Waco, TX, on the one hand, and, on the other, points in the U.S. (except AK and HI).

MC 144927 (Sub-32F), filed November 28, 1980. Applicant: REMINGTON FREIGHT LINES, INC., P.O. Box 315, Remington, IN 47977. Representative: Gerald R. Morlan (same address as applicant). Transporting *general commodities,* between points in the U.S., restricted to traffic originating at or destined to the facilities of North Eastern Pennsylvania Shippers Cooperative Association, Inc. Condition: To the extent the certificate to be issued in this proceeding authorizes the transportation of classes A and B explosives, it shall be limited in point of time to a period expiring 5 years from its date of issue.

MC144927 (Sub-33F), filed November 28, 1980. Applicant: REMINGTON FREIGHT LINES, INC., P.O. Box 315, Remington, IN 47977. Representative: Gerald R. Morlan (same address as applicant). Transporting *general commodities,* between points in the U.S., restricted to traffic originating at or destined to the facilities of Delaware Valley Shippers Association, Inc. Condition: To the extent the certificate to be issued in this proceeding authorizes the transportation of classes A and B explosives, it shall be limited in point of time to a period expiring 5 years from its date of issue.

MC 146656 (Sub-61F), filed November 28, 1980. Applicant: KEY WAY TRANSPORT, INC., 820 South Oldham St., Baltimore, MD 21224. Representative: William F. Lamperelli (same address as applicant). Transporting (1) *alcoholic beverages, malt beverages, and non-alcoholic beverages,* and (2) *materials, equipment, and supplies* used in the distribution of the commodities in (1) above, between points in the U.S., under continuing contract(s) with Milton S. Kronheim & Company, Inc., of Washington, DC, and The Kronheim Company, Inc., of Halethorpe, MD.

MC 147677 (Sub-3F), filed November 28, 1980. Applicant: J & L TRUCK LINES, INC., P.O. Box 1069, Odessa, TX 79760. Representative: Joe L. White (same address as applicant). Over regular, Transporting *general commodities* (except those of unusual value, classes A and B explosives, household goods as defined by the Commission, commodities in bulk, and those requiring special equipment), (1) between Dallas and Odessa, TX, over Interstate Hwy 20, serving no intermediate points, (2) between Lovington and Roswell, NM: from Lovington over NM Hwy 18 to junction U.S. Hwy 380, then over U.S. Hwy 380 to Roswell, and return over the same route, serving all intermediate points, (3) between Roswell and Artesia, NM, over U.S. Hwys 285 and Alternate 285, serving all intermediate points, (4) between Carlsbad and Whites City, NM, over combined U.S. Hwys 62 and 180, serving all intermediate points, and (5) between Whites City and Malaga, NM: from Whites City over combined U.S. Hwys 62 and 180 to junction NM Hwy 396, then over NM Hwy 396 to Malaga, and return over the same route, serving all intermediate points.

Note.—Applicant intends to interline and tack the authority herein.

MC 151446 (Sub-1F), filed November 29, 1980. Applicant: CHARLES R. HEYL, d.b.a. C.R.H. DELIVERY, 2539 Bremerton, St. Louis, MO 63144. Representative: Ernest A. Brooks, II, 1301 Ambassador Bldg., St. Louis, MO 63101. Transporting *paper and paper articles,* from St. Louis, MO, to those points in IL on and south of Interstate Hwy 80.

MC 152347 (Sub-1F), filed November 28, 1980. Applicant: TRANS-POWER TRUCK LINES, INC., 8685 Canterbury, Newport, MI 48166. Representative: Victor A. Rosenberger Jr., 2711 W. Central Ave., Toledo, OH 43606. Transporting *general commodities* (except those of unusual value, classes A and B explosives, household goods as defined by the Commission, commodities in bulk, and those requiring special equipment), between points in CT, DE, GA, IL, IN, KS, KY, MD, MA, MI, MN, MO, NJ, NY, OH, PA, TN, and WI.

Volume No. OP4-151

Decided: December 5, 1980.

By the Commission, review Board Number 3, Members Parker, Fortier and Hill, Member Hill not participating.

MC 152847F filed November 20, 1980. Applicant: FLOOD, INC., 8134 S. Washtenaw Ave., Chicago, IL 60652. Representative: Michael J. Flood (same address as applicant). As a broker to arrange for the transportation of *general commodities* (except household goods), between points in the U.S.

To the Commission

Agatha L. Mergenovich,

Secretary.

[FR Doc. 80-38369 Filed 12-10-80; 8:45 am]

BILLING CODE 7035-01-M

Permanent Authority Decisions; Decision-Notice

The following applications filed on or after July 3, 1980, are governed by Special Rule 247 of the Commission's Rules of Practice, see 49 CFR 1100.247. Special rule 247 was published in the Federal Register of July 3, 1980, at 45 FR 45539.

Persons wishing to oppose an application must follow the rules under 49 CFR 1100.247(B). A copy of any application, together with applicant's supporting evidence, can be obtained from any applicant upon request and payment to applicant of $10.00.

Amendments to the request for authority are not allowed. Some of the applications may have been modified prior to publication to conform to the Commission's policy of simplifying grants of operating authority.

Findings

With the exception of those applications involving duly noted problems (e.g., unresolved common control, fitness, water carrier dual operations, or jurisdictional questions) we find, preliminarily, that each applicant has demonstrated its proposed service warrants a grant of the application under the governing section of the Interstate Commerce Act. Each applicant is fit, willing, and able to perform the service proposed, and to conform to the requirements of Title 49, Subtitle IV, United States Code, and the Commission's regulations. Except where noted, this decision is neither a major Federal action significantly affecting the quality of the human environment nor a major regulatory action under the Energy Policy and Conservation Act of 1975.

In the absence of legally sufficient protests in the form of verified statements filed within 45 days of publication of this decision-notice (or, if the application later becomes unopposed) appropriate authority will be issued to each applicant (except those with duly noted problems) upon compliance with certain requirements which will be set forth in a notice that the decision-notice is effective. Within 60 days after publication an applicant may file a verified statement in rebuttal to any statement in opposition.

To the extent that any of the authority granted may duplicate an applicant's other authority, the duplication shall be construed as conferring only a single operating right.

Note.—All applications are for authority to operate as a motor common carrier in interstate or foreign commerce over irregular routes, unless noted otherwise. Applications

for motor contract carrier authority are those where service is for a named shipper "under contract".

Volume No. OP1-094

Decided: December 4, 1980.

By the Commission, Review Board Number 3, Members Parker, Fortier, and Hill. Member Hill not participating.

MC 2860 (Sub-213F), filed November 25, 1980. Applicant: NATIONAL FREIGHT, INC., 71 West Park Ave., Vineland, NJ 08360. Representative: Gerald Duzinski (same address as applicant). Transporting *general commodities* (except classes A and B explosives, household goods as defined by the Commission, and commodities in bulk), between points in CT, DE, FL, GA, MD, MA, NJ, NY, NC, PA, RI, SC, VA, and DC.

Note.—Applicant intends to tack and join the sought rights to its existing authority.

MC 33541 (Sub-156F), filed November 16, 1980. Applicant: IML FREIGHT, INC., P.O. Box 30277, Salt Lake City, UT 54130. Representative: Eldon E. Bresee (same address as applicant). Transporting *general commodities* (except household goods as defined by the Commission and classes A and B explosives), between points in the U.S. Condition: Issuance of a certificate in this proceeding is subject to the coincidental cancellation, at applicant's written request, of it's existing certificates in No. MC-33641 (and subs thereunder).

MC 35320 (Sub-623F), filed December 1, 1980. Applicant: T.I.M.E.-DC, INC., 2598 74th Street, P.O. Box 2550, Lubbock, TX 79408. Representative: Kenneth G. Thomas (same address as applicant). Transporting *general commodities* (except classes A and B explosives and household goods as defined by the Commission), serving Salt Lake City and Clearfield, UT, as off-route points in connection with carrier's otherwise authorized regular-route operations.

MC 69901 (Sub-41F), filed November 25, 1980. Applicant: COURIER-NEWSOM EXPRESS, INC., P.O. Box 270, Columbus, IN 47201. Representative: Joel H. Steiner, 39 South LaSalle St., Chicago, IL 60603. Transporting *general commodities* (except classes A and B explosives, household goods as defined by the Commission, commodities in bulk, and those requiring special equipment), between Lafayette, GA, on the one hand, and, on the other, Kankakee, IL.

MC 95540 (Sub-1169F), filed November 29, 1980. Applicant: WATKINS MOTOR LINES, INC., P.O. Box 1636, Lakeland, FL 33802. Representative: Paul M. Daniell, P.O. Box 872, Atlanta, GA 30301. Transporting *general commodities* (except those of unusual value, classes A and B explosives, household goods as defined by the Commission, commodities in bulk, and those requiring special equipment), between points in the U.S. Condition: Issuance of a certificate in this proceeding is subject to the coincidental cancellation, at applicant's written request, of its existing certificates in No. MC-99540 (and subs thereunder).

MC 99161 (Sub-7F), filed November 25, 1980. Applicant: ALABAMA FREIGHT, INC., P.O. Box 11032, Birmingham, AL 35207. Representative: John R. Frawley, Jr., 5506 Crestwood Blvd., Birmingham, AL 35212. Transporting (1) *fabricated metal products;* except ordnance machinery, or transportation equipment, as described in Item 34 of the Standard Transportation Commodity Code Tariff, and (2) *plastic pipe,* between Birmingham and Mobile, AL, Little Rock, AR, Jackson, MS, Chattanooga, TN, Jacksonville and Tampa, FL, Atlanta, GA, and Shreveport and Lafayette, AL, on the one hand, and, on the other, points in GA, TN, FL, MS, LA, AL, and AR. Condition: Issuance of a certificate in this proceeding is subject to the coincidental cancellation, at applicant's written request, of its certificates in MC-99161 Subs 5 and 6.

MC 106961 (Sub-5F), filed November 25, 1980. Applicant: SPEAR TRUCKING CORPORATION, 3 Brick Kiln Road, North Billerica, MA 01862. Representative: Irving Klein, 371 Seventh Avenue, New York, NY 10001. Transporting (1) *bicycles and bicycle parts,* and (2) *materials, equipment and supplies* used in the manufacture and distribution of the commodities in (1) above, between Allentown, PA, on the one hand, and, on the other, points in MA.

MC 114211 (Sub-485F), filed November 21, 1980. Applicant: WARREN TRANSPORT, INC., PO Box 420, Waterloo, IA 50704. Representative: Kurt E. Vragel, Jr. (Same address as aplicant). Transporting (1) *air conditioning equipment and furnaces,* (2) *parts and accessories* for the commodities in (1) above, and (3) *materials, equipment and supplies* used in the manufacture and distribution of the commodities in (1) and (2) above, between those points in the U.S. in and east of ND, SD, NE, KS, OK, and TX, restricted to traffic originating at or destined to the facilities of Carrier Corporation, its dealers and distributors.

MC 124511 (Sub-70F), filed November 24, 1980. Applicant: OLIVER MOTOR SERVICE, INC., P.O. Box 223, East Highway 54, Mexico, MO 65265. Representative: Leonard R. Kofkin, 39 South La Salle St., Chicago, IL 60603. Transporting *iron and steel articles and building materials,* from the facilities used by U.S. Steel Corp. at Chicago, IL, to points in AR, KS, OK, and TX.

MC 124821 (Sub-112F), filed November 20, 1980. Applicant: GILCHRIST TRUCKING, INC., 105 N. Keyser Ave., Old Forge, PA 18518. Representative: John W. Frame, Box 626, 2207 Old Gettysburg Rd., Camp Hill, PA 17011. Transporting *general commodities* (except household goods as defined by the Commission and classes A and B explosives), between Scranton and points in Exeter Township and Luzerne County, PA, on the one hand, and, on the other, points in the U.S.

MC 125470 (Sub-58F), filed November 18, 1980. Applicant: MOORE'S TRANSFER, INC., P.O. Box 1151, Norfolk, NE 68701. Representative: Lavern R. Holdeman, P.O. Box 81849, Lincoln, NE 68501. Transporting *general commodities* (except classes A and B explosives and used household goods), between points in ND, SD, NE, KS, IA, and UT, on the one hand, and, on the other, points in the U.S. (except AK and HI).

MC 129720 (Sub-16F), filed November 25, 1980. Applicant: JOSEPH A. BECKER, d.b.a. BECKER HI-WAY FRATE, Route 5, Box 10-B, Albert Lea, MN 56007. Representative: Andrew R. Clark, 1600 TCF Tower, 121 South 8th St., Minneapolis, MN 55402. Transporting (1) *general commodities* (except houshold goods as defined by the Commission and classes A and B explosives), between points in the U.S., under continuing contract(s) with Diamond International Corporation, of New York, NY, Holsum Foods, Division of Farmers Union Grain Terminal Association, of Mankato, MN, and Globe Products Company, of Clifton, NJ, and (2) *meats, meat products, meat byproducts and articles distributed by meat-packing houses,* as described in Sections A and C of Appendix I to the report in *Descriptions in Motor Carrier Certificates,* 61 M.C.C. 209 and 766 (except hides and commodities in bulk), between points in the U.S., under continuing contract(s) with Wilson Foods Corporation, of Oklahoma City, OK.

MC 133590 (Sub-31F), filed November 24, 1980. Applicant: WESTERN CARRIERS, INC., P.O. Box 925, Worcester, MA 01613. Representative: David M. Marshall, 101 State St., Suite 304, Springfield, MA 01103. Transporting *such commodities* as are dealt in by manufacturers and distributors of sporting goods, sports apparel and

recreational equipment, between points in MA, CT, RI, NH, VT, NY, and NJ, on the one hand, and, on the other, points in the U.S. (except AK and HI).

MC 135410 (Sub-112F), filed November 24, 1980. Applicant: COURTNEY J. MUNSON, d.b.a. MUNSON TRUCKING, North 6th Street Rd., P.O. Box 266, Monmouth, IL 61462. Representative: Daniel O. Hands, Suite 200, 205 W. Touhy Ave., Park Ridge, IL 60068. Transporting *such commodities* as are dealt in or used by manufacturers of building materials (except commodities in bulk), between North Hampton Township, Wadsworth and West Salem, OH, on the one hand, and, on the other, points in IA, IL, KS, MN, MO, NE, and WI.

MC 135861 (Sub-88F), filed November 24, 1980. Applicant: LISA MOTOR LINES, INC., P.O. Box 4550, Fort Worth, TX 76106. Representative: Billy R. Reid, 1721 Carl St., Fort Worth, TX 76103. Transporting *foodstuffs,* between points in the U.S., under continuing contract(s) with Keene Distributors, Inc., of Cleburne, TX.

MC 139190 (Sub-8F), filed November 25, 1980. Applicant: KOCH TRUCK LINE, INC., 619 Iowa, Sabetha, KS 66534. Representative: Eugene W. Hiatt, 207 Casson Bldg., 603 Topeka, Blvd., Topeka, KS 66603. Transporting (1)(a) *agricultural machinery and parts,* and (b) *flat bed trailers,* and (2) *steel articles, cast iron hubs and drums for trailers,* between points in the U.S., under continuing contract(s) with Landoll Corporation, of Marysville, KS. Condition: Issuance of a permit in this proceeding is subject to the coincidental cancellation, at applicant's written request, of Permit No. MC-139190 Sub 2.

MC 139960 (Sub-4F), filed November 12, 1980. Applicant: WPX FREIGHT SYSTEM, INC., 526 Mission Street, San Francisco, CA 94105. Representative: Stephen T. Rudman (same address as applicant). Over *regular* routes, transporting *general commodities* (except classes A and B explosives and household goods as defined by the Commission), (1) between Los Angeles, CA, and Salt Lake City, UT, from Los Angeles over Interstate Hwy 5 to junction CA Hwy 14, then over CA Hwy 14 to junction U.S. Hwy 395, then over U.S. Hwy 395 to junction U.S. Hwy 6, then over U.S. Hwy 6 to junction Interstate Hwy 15, then over Interstate Hwy 15 to Salt Lake City, UT, and return over the same route, serving all intermediate points, (2) serving the facilities of The Anaconda Copper Company's "Nevada Moly" project near Tonopah, NV, as an off-route point in connection with applicant's otherwise authorized regular-route operations, (3) between Salt Lake City, UT, and Ontario, OR, from Salt Lake City, over Interstate Hwy 15 to junction Interstate Hwy 80-N (which Interstate Hwy 80-N will be redesignated Interstate Hwy 84), then over Interstate Hwy 80-N to Glenns Ferry, ID, then over U.S. Hwys 26 and 30 to junction Interstate Hwy 80-N near Hammett, ID, then over Interstate Hwy 80-N to Ontario, OR, and return over the same route, serving all intermediate points and the off-route points of Marsing, Homedale, Weiser, Payette, Rupert, Paul, Burley, Buhl, Twin Falls, Jerome, Mountain Home and Mountain Home Air Force Base, ID, (4) between Ogden, UT, and Idaho Falls, ID, from Ogden, over U.S. Hwy 89 to junction U.S. Hwy 91, then over U.S. Hwy 91, to junction Interstate Hwy 15, then over Interstate Hwy 15 to Idaho Falls, and return over the same route serving all intermediate points, (5) serving Lewisville, ID, and the facilities of Basic American Food Company, near Blackfoot, ID, as off-route points in connection with applicant's otherwise authorized regular route operations, (6) between Ogden, UT, and Pocatello, ID, over Interstate Hwy 15, as an alternate route for operating convenience only, serving no intermediate points, (7) between Pocatello, ID, and junction Interstate Hwys 86 and 80-N (which Interstate Hwy 80-N will be redesignated Interstate Hwy 84), over Interstate Hwys 86 and 30, serving no intermediate points and serving the off-route points of Aberdeen and American Falls, ID, and serving the junction of Interstate Hwys 86 and 80-N for purposes of joinder only, (8) between Caldwell, ID, and Coaldale, NV, over U.S. Hwy 95, as an alternate route for operating convenience only, serving no intermediate points, and (9) between Twin Falls, ID, and Los Angeles, CA, from Twin Falls, over U.S. Hwy 93 to junction Interstate Hwy 15, then over Interstate Hwy 15, to junction Interstate Hwy 10, then over Interstate Hwy 10 to Los Angeles, CA, and return over the same route, as an alternate route for operating convenience only, serving no intermediate points.

MC 142680 (Sub-15F), filed November 24, 1980. Applicant: SUMTER TIMBER CO., INC., P.O. Box 104, Cuba, AL 36907. Representative: Virgil H. Smith, Suite, 12, 1587 Phoenix Blvd., Atlanta, GA 30349. Transporting *lumber,* (1) from the facilities of Linden Lumber Co., at or near Linden, AL, to points in MS, TN, and TX, and (2) from the facilities of Linden Lumber Co., at or near Linden, AL, to points in Mobile and Baldwin Counties, AL, restricted to traffic having an immediately subsequent movement by water in (2) above.

MC 143630 (Sub-7F), filed November 24, 1980. Applicant: FLOYD M. GRIEBEL, SR., FLOYD M. GRIEBEL, JR. AND WILLIAM GRIEBEL, d.b.a. GRIEBEL'S TRUCKING, a partnership; P.O. Box 243, Marengo, IL 60152. Representative: Robert J. Gill, First Commercial Bank Bldg., 410 Cortez Rd. West, Bradenton, FL 33507. Transporting *such commodities* as are dealt in or used by a manufacturer or distributor of road construction materials and building materials, (except commodities in bulk and those requiring special equipment), between points in the U.S., under continuing contract(s) with W. R. Meadows Incorporated, of Elgin, IL.

MC 144011 (Sub-4F), filed November 25, 1980. Applicant: HALL SYSTEMS, INC., 214 South 10th St., Birmingham, AL 35233. Representative: George M. Boles, 727 Frank Nelson Bldg., Birmingham, AL 35203. Transporting *general commodities* (except those of unusual value, classes A and B explosives, household goods as defined by the Commission, commodities in bulk, and those requiring special equipment), (A) over regular routes, between New Orleans and Baton Rouge, LA (1) over Interstate Hwy 10, and (2) over Interstate Hwy 61, serving no interstate points, and (B) over irregular routes, between points in the Baton Rouge, LA Commercial Zone.

Note.—Applicant intends to tack this authority with its authority in MC-144011 at New Orleans, LA.

MC 145441 (Sub-125F), filed November 28, 1980. Applicant: A.C.B. TRUCKING, INC., P.O. Box 5130, North Little Rock, AR 72119. Representative: Ralph E. Bradbury (same address as applicant). Transporting *general commodities* (except those of unusual value, classes A and B explosives, household goods as defined by the Commission, commodities in bulk, and those requiring special equipment), between the facilities of Foremost McKesson, Inc., at San Francisco, CA, on the one hand, and, on the other, points in the U.S.

MC 147731 (Sub-1F), filed November 25, 1980. Applicant: GALVESTON CONTAINER SERVICE, INC., d.b.a. UNEEDA TRANSFER CO., P.O. Box 3363, Galveston, TX 77552. Representative: Billy R. Reid, 1721 Carl St., Fort Worth, TX 76103. Transporting *general commodities* (except classes A and B explosives, and household goods as defined by the Commission), between points in Brazoria, Galveston, Harris, Chambers, Jefferson, and Orange Counties, TX, and Calcasieu Parish, LA,

restricted to traffic having a prior or subsequent movement by water.

MC 148000 (Sub-6F), filed November 16, 1980. Applicant: C. H. DREDGE & CO., INC. 918 South 2000 West Syracuse, UT 84041. Representative: Bruce W. Shand, 430 Judge Bldg., Salt Lake City, UT 84111. Transporting *business forms,* between points in Falls County, TX, and Denver County, CO.

MC 150211 (Sub-7F), filed November 26, 1980. Applicant: ASAP EXPRESS, INC., P.O. Box 3250, Jackson, TN 38301. Representative: Jerry Ross (same address as applicant). Transporting (1) *photo offset printing plates and sheets, gum, solvents, and aluminum articles,* and (2) *materials, equipment, and supplies* used in the manufacture and distribution of the commodities in (1) above, between Jackson, TN, on the one hand, and, on the other, points in CA, CO, GA, IA, IL, NC, OH, PA, TX, and WI.

MC 150770 (Sub-1F), filed November 28, 1980. Applicant: COTANT TRUCK LINES, INC., 420 W. Chubbuck Rd. Chubbuck, ID 83201. Representative: Timothy R. Stivers, P.O. Box 162, Boise, ID 83701. Transporting *general commodities* (except classes A and B explosives, and household goods as defined by the Commission), between points in the U.S., under continuing contract(s) with Kraft, Inc., of Chicago, IL.

MC 151011 (Sub-1F), filed November 17, 1980. Applicant: VTS TRUCKING, 2676 Orange Ave., Signal Hill, CA 90806. Representative: David P. Christianson, 707 Wilshire Blvd., Suite 1800, Los Angeles, CA 90017. Transporting *petroleum and petroleum products,* between points in WA, OR, CA, NV, ID, MT, WY, UT, CO, AZ, NM, OK, and TX.

MC 151450 (Sub-1F), filed November 29, 1980. Applicant: JOE GILBERT GONZALES, P.O. Box 93, Dixon, NM 82527. Representative: Charles M. Williams, 350 Capitol Life Center, 1600 Sherman St., Denver, CO 80203. Transporting *such commodities* as are dealt in by manufacturers, distributors, wholesalers, and retailers of feed, feed ingredients, feed additives, and pet food products, between points in AZ, CA, CO, IA, KS, NE, NM, OK, SD, TX, UT, and WY.

MC 152650 (Sub-1F), filed November 25, 1980. Applicant: SHAVER TRUCKING CO., INC., P.O. Box 104, Springfield, AR 72764.Representative: John C. Everett, 140 E. Buchanan, P.O. Box A, Prairie Grove, AR 72753. Transporting (1) *furniture parts, metal products, and paper products,* and (2) *materials, equipment, and supplies* used in the manufacture, distribution and installation, of the commodities in (1) above, between the facilities of Leggett & Platt, Inc. and its affiliates, at Carthage, Aurora, and Springfield, MO, on the one hand, and, on the other, points in the U.S., restricted to traffic originating at or destined to the facilities of Leggett & Platt, Inc. and its affiliates.

MC 152810F, filed November 21, 1980. Applicant: SWEENEY TRUCKING, INC., 2438 Winwood Ave., Moraine, OH 45439. Representative: David A. Turano, 100 E Broad St., Columbus, OH 43215. Transporting (1) *water softeners,* and (2) *materials, equipment, and supplies* used in the manufacture of water softeners (except commodities in bulk), between points in the U.S., under continuing contract(s) with Water Refining Co., Inc., of Middletown, OH.

Volume No. OP2-113

Decided: Dec. 2, 1980.

By the Commission, Review Board Number 1, Members Carleton, Joyce and Jones.

MC 145332 (Sub-4F) (Correction) filed October 26, 1980, published in the Federal Register, issue of November 21, 1980, and republished, as corrected, this issue. Applicant: STEPHEN HROBUCHAK d.b.a. TRANS-CONTINENTAL REFRIGERATED LINES, Route 502, P.O.B. 1456, Scranton, PA 18501. Representative: Peter Wolff, 722 Pittston Ave., Scranton, PA 18505. Transporting *food or kindred products,* as described in Item 20 of the *Standard Transportation Commodity Code Tariff* (except commodities in bulk), between points in Northumberland County, PA, on the one hand, and, on the other, points in CA, OR, and WA. The purpose of this republication is to correct the territorial description to read as previously requested.

Volume No. OP4-148

Decided: Dec. 5, 1980.

By the Commission, Review Board Number 2, Members Chandler, Eaton and Liberman. Member Liberman not participating.

MC 26396 (Sub-381F), filed November 21, 1980. Applicant: THE WAGGONERS TRUCKING, a corporation, P.O.B. 31357, Billings, MT 59107. Representative: Bradford E. Kistler, P.O. Box 82028, Lincoln, NE 68501.Transporting *general commodities* (except those of unusual value, classes A and B explosives and household goods as defined by the Commission), between points in the U.S., restricted to traffic originating at or destined to the facilities by ASARCO, Inc.

MC 61977 (Sub-37F), filed November 16, 1980. Applicant: ZERKLE TRUCKING CO., a corporation, 2400 Eighth Ave., P.O. Box 5628, Huntington, WV 25703. Representative: N. W. Bowen, Jr. (same address as applicant). Transporting (1) *expanded plastic sheeting,* between points in Greenup County, KY, on the one hand, and, on the other, those points in the U.S. in and east of MT, WY, CO, and NM, and (2) *materials, equipment, and supplies* used in the manufacture of expanded plastic sheeting (except commodities in bulk), in the reverse direction, restricted in both (1) and (2) to traffic originating at or destined to the facilities used by E. I. du Pont de Nemours & Co., Inc.

MC 89617 (Sub-28F), filed November 25, 1980. Applicant: LEWIS TRUCK LINES, INC., P.O. Box 1494, Conway, SC 29526. Representative: Hebert Alan Dubin, 818 Connecticut Ave., NW, Washington, DC 20006. Transporting (1) *construction materials,* and (2) *equipment and supplies* used in the manufacture and distribution of the commodities in (1) above, points in AL, FL, GA, NC, SC, TN, and Va.

MC 95876 (Sub-369F), filed November 13, 1980. Applicant: ANDERSON TRUCKING SERVICE, INC., 203 Cooper Ave. No., St, Cloud, MN 56301. Representative: Robert D. Gisvold, 1600 TCF Tower, 121 So. 8th St., Minneapolis, MN 55402. Transporting *general commodities* (except commodities in bulk, and classes A and B explosives), between points in the U.S., under continuing contracts(s) with Edward Hines Lumber Co., of Chicago, IL.

MC 98327 (Sub-48F), filed November 21, 1980. Applicant: SYSTEM 99, 8201 Edgewater Dr., Oakland, CA 94621. Representative: Ray V. Mitchell (same address as applicant). Transporting *general commodities* (except those of unusual value, classes A and B explosives, household goods as defined by the Commission, commodities in bulk, and those requiring special equipment), between points in NM, TX, CO, AZ, and CA, on the one hand, and, on the other, points in CO, OK, TX, LA, AR, KS, NE, MO, IA, IL, IN, OH, KY, TN, MS, AL, GA, NC, SC, VA, WV, MD, DE, PA, NJ, NY, CT, RI, MA, MI, WI, and DC. Note: Any duplication of authority granted herein or to the extent that such authority duplicates any heretofore granted to or now held by carrier shall not be construed as conferring more than one operating right. Applicant states it intends to tack this authority with its existing authority and any authority it may acquire in the future.

MC 102616 (Sub-1033F), filed November 13, 1980. Applicant: COASTAL TANK LINES, INC., 250 N. Cleveland-Massillon Rd., Akron, Ohio

44313. Representative: David F. McAllister (same address as applicant). Transporting (1) *crude petroleum, natural gas or gasoline,* (2) *food or kindred products,* (3) *chemicals or allied products,* (4) *petroleum or coal products,* (5) *clay, concrete, glass, or stone products,* (6) *waste or scrap materials,* and (7) *hazardous materials or hazardous substances,* as described in Items 13, 20, 28, 29, 32, 40, and 49, respectively, of the Standard Transportation Commodity Code Tariff, and (8) *used tank trailers and used trailer chassis,* (a) between those points in the U.S. in and east of ND, SD, NE, CO, OK, TX, and (b) between those points in Part (a), on the one hand, and, on the other, points, AZ, CA, ID, MT, NM, NV, OR, UT, WA, and WY.

MC 110686 (Sub-66F), filed November 20, 1980. Applicant: McCormick DRAY LINE, INC., Avis, PA 17721. Representative: David A. Sutherlund, 1150 Connecticut Ave., NW, Suite 400, Washington, DC 20036. Transporting *metal products* and *materials, equipment and supplies* used in the manufacture of metal products, between points in DE, MD, NJ, NY, OH, PA and WV, on the one hand, and, on the other, points in CT, DE, IL, IN, IA, KY, MD, MA, ME, MI, MN, MO, NH, NJ, NY, NC, OH, PA, RI, TN, VT, VA, WV, WI and DC.

MC 121457 (Sub-7F), filed November 25, 1980. Applicant: MERCURY TRANSPORTATION, INC., 8502 Miller Road #3, Houston, TX 77049. Representative: Harold H. Mitchell, Jr., P.O. Box 1295, Greenville, MS 38701. Transporting *Pre-cast concrete products and equipment materials and supplies* used in the manufacture or installation of pre-cast concrete products (except commodities in bulk) between points in the U.S., under continuing contract(s) with Petra, Inc., of Channelview, TX.

MC 126436 (Sub-14F), filed Nobember 21, 1980. Applicant: REFRIGERATED TRANSPORT CO., INC., P.O. Box 308, Forest Park, GA 30050. Representative: Bruce E. Mitchell, 3390 Peachtree Rd., N.E., 5th Floor-Lenox Towers South, Atlanta, GA 30326. Transporting (1) such commodities as are dealt in by *chain grocery and food business houses* (except commodities in bulk), and, *materials, equipment and supplies* used in the manufacture and distribution of commodities in (1) above, (except commodities in bulk) between points in the U.S., under continuing contract(s) with General Foods Corporation, of White Plains, NY.

MC 136247 (Sub-20F), filed November 10, 1980. Applicant: WRIGHT TRUCKING, INC., 409 17th St., SW, Jamestown, ND 58401. Representative: Richard P. Anderson, 502 First National Bank Bldg., Fargo, ND 58126. Transporting *meats, meat products, meat byproducts, and articles distributed by meat-packing houses,* as described in Sections A and C of Appendix I to the report in *Descriptions in Motor Carrier Certificates,* 61 M.C.C. 209 and 766, from the facilities of held Beef Industries, Inc., at West Fargo, ND, to points in the U.S. (except AK and HI).

MC 144377 (Sub-3F), filed November 20, 1980. Applicant: FACTORY & STEEL TRANSPORTATION, INC., Route 1, Box 66-B, Waverly, TN 37185. Representative: Henry E. Seaton, 929 Pennsylvania Bldg., 425 13th St., N.W., Washington, DC 20004. Transporting *general commodities* (except A and B explosives), between points in Benton and Humphreys Counties, TN, on the one hand, and, on the other, points in the U.S.

MC 144416 (Sub-8F), filed November 18 1980. Applicant: C. F. MCGRAW, P.O. Box 498, Garden City, KS 67846. Representative: Herbert Alan Dubin, 818 Connecticut Ave., NW., Washington, DC 20006.Transporting (1) *containers, and (2) materials, equipment and supplies* used in the manufacture of containers, between points in Finney County, KS, on the one hand, and, on the other, points in CO, NE, OK, and TX.

MC 146976 (Sub-4F), filed November 21, 1980. Applicant: FOREWAY TRANSPORTATION, INC., 6633 Lake Michigan Dr., Allendale, MI 49401. Representative: D. Richard Black, Jr., 7610 Cottonwood Dr., Jension, MI 49428. Transporting (1) *such commodities* as are dealt in or used by metal processors (except commodities in bulk), and (2) *supplies* used in manufacture and distribution of commodities in (1) above (except commodities in bulk), between points in CT, DE, IL, IN, KY, MD, MA, MI, MN, NJ, NY, OH, PA, TN, VA, WV, WI, and DC.

MC 147607 (Sub-3F), filed November 25, 1980. Applicant: OFFUTT TRUCKING CO., P.O. Box 126, Glyndon, MN 56547. Representative: James B. Hovland, Suite M-20, 400 Marquette Ave., Minneapolis, MN 55401. Transporting *carpeting,* from points in GA, to points in IL, IA, and NE.

MC 148876 (Sub-2F), filed November 25, 1980. Applicant: MAGNUM FREIGHT LINES, INC., 4841 Eastern Ave., Bell, CA 90201. Representative: Milton W. Flack, 8383 Wilshire Blvd., Suite 900, Beverly Hills, CA 90211. Transporting *general commodities* (except those of unusual value, classes A and B explosives, household goods as defined by the Commission, commodities in bulk, and those requiring special equipment) between points in the U.S., under continuing contract(s) with ABC Trans National Transport, Inc., and Acme Fast Freight, Inc., both of Los Angeles, CA and Inter State Express, Inc., of Brooklyn, NY.

MC 149546 (Sub-2F), filed November 25, 1980. Applicant: D & T TRUCKING CO., INC., 498 First St., NW., New Brighton, MN 55112. Representative: Samuel Rubenstein, P.O. Box 5, Minneapolis, MN 55440. Transporting *such commodities* as are dealt in or used by manufacturers and distributors of paint, between points in the U.S. (except AK and HI).

MC 150404 (Sub-1F), filed November 13, 1980. Applicant: MOTOR DRAYAGE CO., INC. 5215 Salem Hills Ln., Cincinnati, OH 45230. Representative: Ronald J. Denicola, 901 Fifth & Race Tower, Cincinnati, OH 45202. Transporting *valve, valve parts, rough castings, metal scraps, tools, and machinery,* between points in the U.S., under continuing contract(s) with Wm. Powell Company, of Cincinnati, OH.

MC 151596 (Sub-2F), filed November 25, 1980. Applicant: BOB WHITAKER & SON, INC., P.O. Box 65, Roswell, NM 88201. Representative: Bob Whitaker (same address as applicant). Transporting (1) *meats, meat products, meat byproducts, and articles distributed by meat-packing houses,* as described in Sections A and C of Appendix I to the report in *Descriptions in Motor Carrier Certificates,* 61 M.C.C. 209 and 766, and (2) *materials, equipment and supplies* used in the manufacture and distribution of the commodities named in (1) above, between points in Ford County, KS, on the one hand, and, on the other, points in the U.S. (except AK and HI).

MC 152907F filed November 21, 1980. Applicant: SPENCE BUILDING SUPPLY, INC., 1340 Gordon Hwy, Augusta, GA 30901. Representative: Richard A. Slaby, Suite 601, 605 Marion Bldg., Augusta, GA 30902. Transporting *lumber, building materials, commodities* in *bulk, and household goods as defined by the Commission,* between points in GA, SC, AL, FL, NC and TN.

MC 151657 (Sub-1F), filed November 21, 1980. Applicant: ARM TRANSPORTATION CO., P.O. Box 9480, Amarillo, TX 79105. Representative: A. J. Swanson, P.O. Box 1103, Sioux Falls, SD 57101. Transporting: *such commodities* as are dealt in or used by sewing material and fabric stores, between points in the U.S., under continuing contract(s) with Cloth World of Amarillo, TX.

To the Commission
Agatha L. Mergenovich,
Secretary.

[FR Doc. 80-38356 Filed 12-10-80; 8:45 am]
BILLING CODE 7035-01-M

[Volume No. 38]

Petitions, Applications, Alternate Route Deviations, Intrastate Applications, Gateways, and Pack and Crate

Republications of Grants of Operating Rights Authority Prior to Certification; Notice

The following grants of operating rights authorities are republished by order of the Commission to indicate a broadened grant of authority over that previously noticed in the Federal Register.

An original and one copy of a petition for leave to intervene in the proceeding must be filed with the Commission on or before January 12, 1981. Such pleading shall comply with Special Rule 247(e) of the Commission's *General Rules of Practice* (49 CFR 1100.247) addressing specifically the issue(s) indicated as the purpose for republication, and including copies of intervenor's conflicting authorities and a concise statement of intervenor's interest in the proceeding setting forth in detail the precise manner in which it has been prejudiced by lack of notice of the authority granted. A copy of the pleading shall be served concurrently upon the carrier's representative, or carrier if no representative is named.

MC 6252 (Sub-6F) (republication), filed April 24, 1979, published in the Federal Register issue of June 5, 1979, as New York Docket No. T-2237, and republished this issue. A decision of the Commission, Review Board Number 4, decided November 13, 1980, finds that the applicant may conduct operations in interstate or foreign commerce within limits which do not exceed the scope of the intrastate operations for which applicant holds Certificate No. 1011 dated August 26, 1980, issued by the New York Department of Transportation; General commodities, as defined in Section 800.1 of Title 17 of the Official Compilation of Codes, Rules and Regulations of the State of New York: Between all points in a territory comprised of the Counties of Cortland, Herkimer, Jefferson, Lewis, Madison, Oneida, Onondaga and Oswego. Note: That the grant of authority in this decision and applicant's existing authority that it duplicates, shall be construed as conferring only a single operating right.

MC 114569 (Sub-259F) (1st republication), filed April 20, 1979, published in the Federal Register issue of September 7, 1979, and republished this issue. Applicant: SHAFFER TRUCKING, INC., P.O. Box 418, New Kingstown, PA 17072. Representative: N. L. Cummins (same address as applicant). As order of the Commission, Review Board Number 2, decided May 15, 1980, and served June 6, 1980, finds that the present and future public convenience and necessity require operations by applicant in interstate or foreign commerce as a *common carrier*, by motor vehicle, in interstate or foreign commerce, over irregular routes, transporting (1) *bananas*, and (2) *agricultural commodities*, the transportation of which is otherwise exempt from economic regulation under 49 U.S.C. § 10526(a)(6), in mixed loads with bananas, from Tampa, FL, to points in Minnesota, Wisconsin, Illinois, Michigan, Kansas, Ohio, Pennsylvania, New York, New Jersey, Delaware, Maryland, Virginia, West Virginia, Nebraska, Kentucky, Tennessee, Iowa, Mississippi, Missouri, and the District of Columbia.

MC 115841 (Sub-705F) (republication), filed April 19, 1979, previously noticed in the Federal Register issue of October 2, 1979. Applicant: COLONIAL REFRIGERATED TRANSPORTATION, INC., 9041 Executive Park Drive, Suite 110, Building 100, Knoxville, TN 37919. Representative: D. R. Beeler, 9041 Executive Park Drive, Suite 110, Bldg. 100, Knoxville, TN 37919. A Decision by the Commission, Review Board Number 1, decided September 11, 1980, and served September 16, 1980, finds that the present and future public convenience and necessity require operation by applicant in interstate or foreign commerce as a *common carrier*, by motor vehicle, in interstate or foreign commerce, over irregular routes, transporting (1) *charcoal*, from points in MS and FL to points in OK, TX, LA, TN, AL, GA, NC, SC and KY, and (2) *materials, equipment, and supplies used in the manufacture and distribution of charcoal* (except commodities in bulk), in the reverse direction, restricted in (1) and (2) above to traffic originating at or destined to the facilities of Husky Industries, Inc. Applicant is fit, willing, and able properly to perform the granted service and to conform to the requirements of Title 49, Subtitle IV, U.S. Code, and the Commission's regulations. The purpose of this republication is to indicate a grant of inbound authority as well as outbound authority.

MC 119872 (Sub-16F) (republication), filed February 15, 1979, published in the Federal Register issue of May 31, 1979, and republished, this issue. Applicant: GULF TRANSPORT LIMITED, 16 Exhibition Drive, Charlottetown, P. E. I. Canada. Representative: Kenneth B. Williams, 84 State Street, Boston, MA 02109. A decision of the Commission, *Review Board No. 3*, decided February 13, 1980, and served March 10, 1980, finds that the present and future public convenience and necessity require operations by applicant in foreign commerce only, over irregular routes, as a *common carrier*, by motor vehicle, transporting (1) *frozen foods and frozen food products*, (except meat and meat products), (2) *meats and meat products*, as described in section A of Appendix I to the report in *Descriptions in Motor Carrier Certificates*, 61 M.C.C. 209 and 766 (except commodities in bulk), and (3) *canned goods*, between ports of entry on the international boundary line between the United States and Canada located at points in Maine, on the one hand, and, on the other, points in Connecticut, Delaware, Maine, Maryland, Massachusetts, New Hampshire, New Jersey, New York, Pennsylvania, Rhode Island, and Vermont; that applicant is fit, willing, and able properly to perform the granted service and to conform to the requirements of Title 49, Subtitle IV, U.S. Code, and the Commission's regulations. The purpose of this republication is to broaden the scope of authority.

MC 121826 (Sub-1F) (republication), filed October 25, 1979, published in the Federal Register issue of November 27, 1979, as Oklahoma Docket No. MC 41925 Sub No. 1, and republished this issue. A decision of the Commission, *Review Board No. 4*, decided November 13, 1980, finds that the applicant may conduct operations in interstate or foreign commerce within limits which do not exceed the scope of the intrastate operations for which applicant holds Certificate No. MC 41925, Sub 1, dated August 21, 1980, issued by the Oklahoma Corporation Commission: Transportation of general commodities, except commodities of unusual value, household goods, explosives, and commodities requiring the use of special equipment for loading, unloading, or transportation between the intersection of IH 40 and State Hwy 99 and the intersection of IH and U.S. Hwy 69. From the intersection of IH40 and State Hwy 99 over IH 40 to its intersection with U.S. 69 and return over the same route, serving no intermediate points or termini. For operating

convenience only. Between the intersection of IH 40 and U.S. Hwy 69 and Poteau, OK. From the intersection of IH 40 and U.S. Hwy 69 over IH 40 to its intersection with U.S. Hwy 59, then over U.S. Hwy 59 to Poteau and return over the same route, serving Poteau, and all intermediate points and the off-route points of Checotah, Warner, Webber's Falls, Porum, Gore, Vian, and Sallisaw. Between McAlester, OK, and junction U.S. Hwy 69 and IH 40. From McAlester over U.S. Hwy 69 to junction IH 40, and return over the same route, serving all intermediate points. The above authority shall constitute the right to transport freight between points on the separately described routes and between authorized points on routes presently held by the carrier.

Motor Carrier Intrastate Application(s)—Notice

The following application(s) for motor common carrier authority to operate in intrastate commerce seek concurrent motor carrier authorization in interstate or foreign commerce within the limits of the intrastate authority sought, pursuant to Section 10931 (formerly Section 206(a)(6)) of the Interstate Commerce Act. These applications are governed by Special Rule 245 of the Commission's General Rules of Practice (49 CFR 1100.245), which provides, among other things, that protests and requests for information concerning the time and place of State Commission hearings or other proceedings, any subsequent changes therein, and any other related matters shall be directed to the State Commission with which the application is filed and shall not be addressed to or filed with the Interstate Commerce Commission.

Michigan Docket C-3579, case No. 9, filed October 8, 1980. Applicant: MULVENA TRUCK LINE, INC., Alpena, MI 49707. Representative: Walter N. Bieneman, 100 West Long Lake Road, Suite 102, Bloomfield, Hills, MI 48013. Certificate of Public Convenience and Necessity sought to operate a freight service, as follows: Transportation of: General commodities as follows: A. 1. From Cheboygan via county highway 66 to junction with U.S. 31, thence via U.S. 31 to junction U.S. 131, thence via U.S. 131 to junction I-96 at Grand Rapids, and thence via I-96 to Detroit, and return over the same route. 2. From Petoskey via U.S. 31 to junction with Michigan highway 115 and thence via Michigan highway 115 to junction with U.S. 131 near Cadillac, and return over the same route. 3. From Gaylord via Michigan highway 32 to junction with U.S. 131, and return over the same route. 4. Service is authorized at all intermediate and off-route points as follows: (i) All points in the Counties of Emmett, Charlevoix, Antrim, Kalkaska, Grand Traverse, Wexford, Missaukee, Osceola, Mecosta, Montcalm, Kent and those in Cheboygan County on and west of I-75 and on and north of Michigan highway 68; (ii) all intermediate and off-route points, including the commercial zones thereof as described in Docket D-4317, within three miles of the routes above described; and (iii) points within five miles of Gaylord. Restriction: The service described above shall be restricted to the transportation of traffic which the carrier either receives at or delivers to otherwise authorized points in Arenac, Ogemaw, Iosco, Alcona, Oscoda, Otsego, Montmorency, Alpena, Presque Isle and Cheboygan Counties. B. 1. From Lansing via I-69 to Flint, and return over the same route. 2. From junction U.S. 23 and I-96 near Brighton, thence via U.S. 23 to Flint and return over the same route. 3. From Grand Rapids via U.S. 131 to junction with Michigan highway 57, thence via Michigan highway 57 to junction with I-75, and return over the same route. 4. From junction of Michigan highway 115 with U.S. 131 near Cadillac via Michigan highway 115 to junction with U.S. 10, thence via U.S. 10 to Bay City and return over the same route. 5. Service over the routes described in paragraph B shall include the right to join such routes with otherwise authorized routes and shall be restricted to service for operating convenience only between points otherwise authorized. Restriction: Service at points authorized under paragraph B hereof is restricted to the transportation of traffic which the carrier either receives at or delivers to otherwise authorized points in Arenac, Ogemaw, Iosco, Alcona, Oscoda, Otsego, Montmorency, Alpena, Presque Isle and Cheboygan Counties, Intrastate, Interstate and Foreign. Intrastate, interstate and foreign commerce sought. Hearing: January 13, 14, 15, & 16, 1981, 9:30 a.m., Holiday Inn, Alpena, MI. Requests for procedural information should be addressed to Michigan Public Service Commission, Mercantile Bldg., 6545 Mercantile Way, Post Office Box 30221, Lansing, MI 48909, and should not be directed to the Interstate Commerce Commission.

Michigan Docket C-3579, case No. 10, filed October 9, 1980. Applicant: MULVENA TRUCK LINE, INC., Alpena, MI 49707. Representative: Walter N. Bieneman, 100 West Long Lake Road, Suite 102, Bloomfield, MI 48013. Certificate of Public Convenience and Necessity sought to operate a freight service, as follows: Transportation of: General commodities as follows: Serving all points within five (5) five miles of Gaylord, Michigan, in connection with otherwise authorized service, Intrastate, Interstate and Foreign. Intrastate, interstate and foreign commerce authority sought. Hearing: January 23, 1981, 9:30 a.m., Offices of the Commission, Mercantile Bldg., 6545 Mercantile Way, Lansing, MI 48910. Requests for procedural information should be addressed to Michigan Public Service Commission, Mercantile Bldg., 6545 Mercantile Way, Post Office Box 30221, Lansing, MI 48909, and should not be directed to the Interstate Commerce Commission.

New York Docket T-9816, filed November 7, 1980. Applicant: RONALD W. INCE, 7287 Lakeshore Road, Clay, NY 13041. Certificate of Public Convenience and Necessity sought to operate a freight service, as follows: Transportation of: General commodities as follows: Between Onondaga, Madison, Oswego, Cortland, and Cayuga Counties. Intrastate, interstate and foreign commerce authority sought. Hearing: Date, time and place not yet fixed. Requests for procedural information should be addressed to New York State Department of Transportation, 1220 Washington Avenue, State Campus, Albany, NY 12232, and should not be directed to the Interstate Commerce Commission.

New York Docket T-9818, filed November 10, 1980. Applicant: JOHN E. JONES, Box 1, North Granville, NY 12854. Representative: Neil D. Breslin, Esq. 600 Broadway, Albany, NY 12207. Certificate of Public Convenience and Necessity sought to operate a freight service, as follows: Fuel Oil—From Albany and Rensselaer Counties to all points in Washington County. Intrastate, interstate and foreign commerce authority sought. Hearing: Date, time and place not yet fixed. Requests for procedural information should be addressed to New York State Department of Transportation, 1220 Washington Avenue, State Campus, Albany, NY 12232, and should not be directed to the Interstate Commerce Commission.

Agatha L. Mergenovich,
Secretary.

[FR Doc. 80-38372 Filed 12-10-80; 8:45 am]
BILLING CODE 7035-01-M

[Amendment No. 1 to I.C.C. Order No. 72 Under Service Order No. 1344]

Rerouting Traffic

To: All Railroads;

Upon further consideration of I.C.C. Order No. 72, and good cause appearing therefor:

It is ordered:

I.C.C. Order No. 72 is amended by substituting the following paragraph (h) for paragraph (h) thereof:

(h) *Expiration date.* This order shall expire at 11:59 p.m., December 15, 1980, unless otherwise modified, amended or vacated.

Effective date. This amendment shall become effective at 11:59 p.m., November 30, 1980.

This amendment shall be served upon the Association of American Railroads, Car Service Division, as agent of all railroads subscribing to the car service and car hire agreement under the terms of that agreement, and upon the American Short Line Railroad Association. A copy of this amendment shall be filed with the Director, Office of the Federal Register.

Issued at Washington, DC., November 28, 1980.

Interstate Commerce Commission.

Robert S. Turkington,

Agent.

[FR Doc. 80-38368 Filed 12-10-80; 8:45 am]

BILLING CODE 7035-01-M

Permanent Authority Decision; Decision-Notice

Correction

In FR Doc. 80-34442 appearing at page 73555 in the issue of Wednesday, November 5, 1980, make the following correction:

On page 73557, in the second column, in paragraph MC 105566 (Sub-235F), in the thirteenth line, "American Cyanamid Company" should have read "Union Carbide Corporation".

BILLING CODE 1505-01-M

INTERNATIONAL TRADE COMMISSION

[Investigation No. 337-TA-90]

Certain Airless Paint Spray Pumps and Components Thereof; Designation of Commission Investigative Attorney

Mr. Samuel Bailey is hereby designated as Commission investigative attorney in the above captioned investigation, effective this date. The Secretary is requested to publish this notice in the Federal Register.

Talbot S. Lindstorm,

Chief, Unfair Import Investigations Division.

November 28, 1980.

[FR Doc. 80-38460 Filed 12-10-80; 8:45 am]

BILLING CODE 7020-02-M

[Investigation No. 337-TA-72]

Certain Turning Machines and Components Thereof; Termination

AGENCY: U.S. International Trade Commission.

ACTION: Termination of Investigation No. 337-TA-72, *Certain Turning Machines and Components Thereof.*

SUMMARY: The parties of this investigation have filed a joint motion to terminate based upon a settlement agreement. After reviewing the record, including comments from interested government agencies and private parties, the Commission has voted to terminate the investigation.

SUPPLEMENTARY INFORMATION: In connection with the Commission's investigation under section 337 of the Tariff Act of 1930, as amended (19 U.S.C. 1337) of alleged unfair methods of competition and unfair acts in the importation or sale of certain turning machines and components thereof in the United States, the complainant and the respondents filed a motion on October 23, 1980 (Motion No. 72-56) to terminate this investigation on the basis of a settlement agreement.

Notice of the pendency of the motion to terminate and the general nature of the settlement agreement was published in the Federal Register on November 5, 1980 (45 FR 73563).

Reconsideration: Any party wishing to petition for reconsideration of the Commission's action must do so within 14 days of the service of the Commission Action and Order. Such petitions must be in accord with Commission Rule 210.56 (19 CFR 210.56).

Public Access to Record: Copies of the Commission's Action and Order, and any other public document in this investigation are available to the public during official working hours (8:45 a.m. to 5:15 p.m.) in the Office of the Secretary, U.S. International Trade Commission, 701 E Street NW., Washington, D.C. 20436, telephone 202-523-0161.

FOR FURTHER INFORMATION CONTACT: Scott Daniels, Esq., Office of the General Counsel, U.S. International Trade Commission, 701 E Street NW., Washington, D.C. 20436, telephone 202-523-0480.

Issued: December 8, 1980.

By order of the Commission.

Kenneth R. Mason,

Secretary.

[FR Doc. 80-38459 Filed 12-10-80; 8:45 am]

BILLING CODE 7020-02-M

[Inv. No. 731-TA-4 (Final)]

Countertop Microwave Ovens From Japan; Termination of Antidumping Duty Investigation

AGENCY: U.S. International Trade Commission.

ACTION: Termination of antidumping duty investigation No. 731-TA-4 (Final).

EFFECTIVE DATE: December 4, 1980.

FOR FURTHER INFORMATION CONTACT: Robert Eninger, Office of Investigations, (202-523-0312).

SUPPLEMENTARY INFORMATION: On July 10, 1980, the Commission received notice from the U.S. Department of Commerce (the administering authority) that there is a reasonable basis to believe or suspect that countertop microwave ovens from Japan are being sold, or are likely to be sold, at less than fair value within the meaning of section 733 of the Traiff Act of 1930. Accordingly, the Commission instituted, effective July 10, 1980, an investigation under section 735(b) of the Tariff Act of 1930 to determine whether an industry in the United States is materially injured, or is threatened with material injury, or the establishment of an industry in the United States is materially retarded, by reason of imports of the merchandise with respect to which the administering authority has made an affirmative determination.

Section 734(a) of the Tariff Act of 1930 permits the Commission to terminate antidumping duty investigations upon withdrawal of the petition by the petitioner. On December 1, 1980, the Commission received a letter from counsel on behalf of the Association of Home Appliance Manufacturers, the original petitioner for an antidumping duty investigation, withdrawing its petition in the matter of countertop microwave ovens from Japan and requesting that the Commission terminate its investigation. By this notice the Commission gives notice that it is granting the request of the petitioner by terminating the investigation of countertop microwave ovens from Japan.

In addition to publishing this notice in the Federal Register, the Commission is notifying the Department of Commerce of its action in this case.

Issued: December 5, 1980.

By order of the Commission.
Kenneth R. Mason,
Secretary.
[FR Doc. 80-38458 Filed 12-10-80; 8:45 am]
BILLING CODE 7020-02-M

[Investigation No. 337-TA-88]

Certain Spring Assemblies and Components Thereof, and Methods of Their Manufacture; Notice to All Parties

Notice is hereby given that a prehearing conference will be held in this case at 9:00 a.m. January 16, 1981, in Dodge Center, Room 201, 1010 Wisconsin Avenue, N.W., Washington, D.C.

Notice is also given that the hearing in this proceeding will commence at 9:00 a.m. on February 2, 1981, in the Dodge Center, Room 201, 1010 Wisconsin Avenue, N.W., Washington, D.C.

The Secretary shall publish this notice in the Federal Register.

Issued: December 2, 1980.
Janet D. Saxon,
Administrative Law Judge.
[FR Doc. 80-38455 Filed 12-10-80; 8:45 am]
BILLING CODE 7020-02-M

[Investigation No. 603-TA-6]

Certain Steel Jacks From Canada; Termination

AGENCY: U.S. International Trade Commission.

ACTION: Termination of investigation and issuance of consent order.

SUMMARY: Notice is hereby given that the U.S. International Trade Commission has approved and issued a consent order in the above-entitled investigation, thereby terminating the investigation.

AUTHORITY: The authority for Commission disposition of this investigation is contained in section 603 of the Trade Act of 1974 (19 U.S.C. 2482).

SUPPLEMENTARY INFORMATION: In connection with a complaint filed under section 337 of the Tariff Act of 1930 (19 U.S.C. 1337) and a preliminary investigation by the Commission under section 603 of the Trade Act of 1974 (19 U.S.C. 2482) of alleged unfair acts and methods of competition in the importation into and sale in the United States of certain steel jacks, the complainant, Bloomfield Manufacturing Co., the Commission investigative attorney, and three companies named in the complaint as respondents, J. C. Hallman Manufacturing Co., American Gage and Manufacturing Co., and A. H. Bottorff Co., entered into a consent order agreement. Notice of the proposed consent order and a request for public comment thereon were published on October 8, 1980 (45 FR 66926). By the terms of the notice, all comments were to be received by the Secretary to the Commission no later than November 7, 1980. The thirty-day period has expired, and the Commission has received no comments opposed to issuance of the proposed consent order.

Copies of the Commission's Action and Order and all other non-confidential documents filed in connection with this investigation are available for inspection during official business hours (8:45 a.m. to 5:15 p.m.) in the Office of the Secretary, U.S. International Trade Commission, 701 E Street, NW., Washington, D.C. 20436, telephone 202-523-0161.

FOR FURTHER INFORMATION CONTACT: Michael P. Mabile, Esq., Office of the General Counsel, U.S. International Trade Commission, telephone 202-523-0155.

Issued: December 5, 1980.
By Order of the Commission.
Kenneth R. Mason,
Secretary.
[FR Doc. 80-38457 Filed 12-10-80; 8:45 am]
BILLING CODE 7020-02-M

[TA-203-7]

Nonrubber Footwear; Investigation and Hearing

AGENCY: United States International Trade Commission.

ACTION: Upon its own motion and on the basis of a petition filed on October 23, 1980, on behalf of the American Footwear Industries Association, Amalgamated Clothing and Textile Workers Union, AFL-CIO, and United Food and Commercial Workers International Union, AFL-CIO, the Commision on December 4, 1980, instituted investigation No. TA-203-7 under sections 203(i)(2) and 203(i)(3) of the Trade Act of 1974 (19 U.S.C. 2253(i)(2) and (i)(3)) for the purpose of gathering information in order that it might advise the President of its judgment as to the probable economic effect on the industry concerned of the extension, reduction, or termination of import relief presently in effect with respect to footwear, provided for in items 700.05 through 700.95, inclusive (except items 700.51, 700.52, 700.53, 700.54, 700.60, 700.75, and 700.90), of the Tariff Schedules of the United States (TSUS). The relief in the form of quantitative limitations described in TSUS items 923.90 through 923.94 is provided against imports from Taiwan and Korea in Proclamation 4510 (issued June 24, 1977, 42 FR 32430). Import relief presently in effect with respect to such articles is scheduled to terminate at the close of June 30, 1981, unless extended by the President.

EFFECTIVE DATE: October 23, 1980.

FOR FURTHER INFORMATION CONTACT: Vera Libeau, Senior Investigator (202-523-0368).

SUPPLEMENTARY INFORMATION: *Public hearing ordered.* A public hearing in connection with this investigation will be held in Washington, D.C., at 10 a.m., e.s.t., on Monday, March 9, 1981, in the Hearing Room, U.S. International Trade Commission Building, 701 E Street, NW. Requests for appearances at the hearing should be received in writing by the Secretary to the Commission at his office in Washington no later than the close of business Thursday, February 19, 1981.

Prehearing procedures. To facilitate the hearing process, it is requested that persons wishing to appear at the hearing submit prehearing briefs enumerating and discussing the issues which they wish to raise at the hearing. Nineten copies of such prehearing briefs should be submitted to the Secretary of the Commission no later than the close of business Friday, February 27, 1981. Copies of any prehearing briefs submitted will be made available for public inspection in the Office of the Secretary. While submission of prehearing briefs does not prohibit submission of prepared statements in acordance with section 201.12(d) of the Commision's *Rules of Practice and procedure* (19 CFR 201.12(d)), it would be unnecessary to submit such a statement if a prehearing brief is submitted instead. Any prepared statements submitted will be made a part of the transcript. Oral presentations should, to the extent possible, be limited to issues raised in the prehearing briefs.

A prehearing conference will be held on Friday, February 20, 1981, at 10:00 a.m., e.s.t., in Room 117 of the U.S. International Trade Commission Building.

Persons not represented by counsel or public officials who have relevant matters to present may give testimony without regard to the suggested prehearing procedures outlined above.

Inspection of petition. The petition filed in this case is available for public inspection at the Office of the Secretary, U.S. International Trade Commission.

Issued: December 5, 1980.

By order of the Commission.

Kenneth R. Mason,

Secretary.

[FR Doc. 80-38456 Filed 12-10-80; 8:45 am]

BILLING CODE 7020-02-M

[Investigation No. 337-TA-82]

Certain Headboxes and Papermaking Machine Forming Sections for the Continuous Production of Paper, and Components Thereof; Termination

AGENCY: U.S. International Trade Commission.

ACTION: Termination of investigation with respect to one respondent.

SUMMARY: In the absence of infringement perpetrated by respondent Crown Zellerbach Corp., the Commission granted the motion to terminate the investigation as to that respondent.

SUPPLEMENTARY INFORMATION: This investigation was instituted on April 8, 1980 (45 FR 23832), on the basis of a complaint filed on behalf of Beloit Corp., a manufacturer, developer, and distributor of machinery for the manufacture of paper. The complaint alleged the violation of section 337(a) of the Tariff Act of 1930 (19 U.S.C. 1337(a)) with respect to the importation into and sale in the United States of certain headboxes and papermaking machine forming sections for the continuous production of paper, which are alleged to infringe claims 1, 12, 14-16, and 22 of U.S. Letters Patent RE 28,269, claims 1, 2, and 4-6 of U.S. Letters Patent 3,923,593, and claims 1-5 and 7-14 of U.S. Letters Patent 3,876,498.[1] The complainant owns the aforesaid patents by assignment and seeks an order excluding the allegedly infringing imports from entry into the United States.

On September 14, 1980, respondent Crown Zellerbach Corp. filed a motion to terminate the investigation as to itself. This motion was based on the elimination of any question of infringement perpetrated by Crown Zellerbach as the result of the complainant's motion terminating the investigation as to the '498 patent, which Crown Zellerbach has been specifically accused of infringing, and on the complainant's stipulation that the imported headboxes purchased by Crown Zellerbach do not infringe the claims of the patents remaining in the investigation. The motion was unopposed by the other respondents and was supported by the Commission investigative attorney.

On October 1, 1980, the presiding officer issued a recommended determination that the motion be granted.

Upon consideration of the recommendation of the presiding officer and the record developed in this investigation, on November 26, 1980, the Commission granted Motion Docket No. 82-20 and ordered that investigation No. 337-TA-82 be terminated with respect to respondent Crown Zellerbach Corp. effective as of December 3, 1980, the date of issuance.

Additional Information

Copies of the Commission's Action and Order and all other public documents on the record of this investigation are available for public inspection and may be obtained during official working hours (8:45 a.m. to 5:15 p.m.) from the Office of the Secretary, U.S. International Trade Commission, 701 E Street NW., Room 156, Washington, D.C. 20436, telephone 202-523-0161.

FOR FURTHER INFORMATION CONTACT: Phyllis N. Smithey, Esq., Office of the General Counsel, U.S. International Trade Commission, 701 E Street NW., Room 224, Washington, D.C. 20436, telephone 202-523-0321.

Issued: December 3, 1980.

By order of the Commission.

Kenneth R. Mason,

Secretary.

[FR Doc. 80-38420 Filed 12-10-80; 8:45 am]

BILLING CODE 7020-02-M

[1] On Oct 8, 1980, the Commission voted to terminate the investigation as to this patent on the basis of a motion filed by the complainant.

[Investigation No. 337-TA-91]

Certain Mass Flow Devices and Components Thereof; Designation of Commission Investigative Attorney

Mr. David J. Dir is hereby designated as Commission investigative attorney in the above captioned investigation, effective this date. The Secretary is requested to publish this notice in the Federal Register.

Dated: December 3, 1980.

Talbot S. Lindstrom,

Chief, Unfair Import Investigations Division, U.S. International Trade Commission.

[FR Doc. 80-38427 Filed 12-10-80; 8:45 am]

BILLING CODE 7020-02-M

[Investigation No. 701-TA-68 (Preliminary)]

Leather Wearing Apparel From Uruguay

Determination

On the basis of the record [1] developed in investigation No. 701-TA-68 (Preliminary), the Commission determines that there is a reasonable indication that an industry in the United States is threatened with material injury [2] by reason of imports from Uruguay of leather wearing apparel, provided for in item 791.76 of the Tariff Schedules of the United States (TSUS), which are allegedly being subsidized by the Government of Uruguay.

Background

On October 15, 1980, a petition was filed with the U.S. International Trade Commission and the U.S. Department of Commerce on behalf of domestic producers of leather wearing apparel, alleging that a bounty or grant is being bestowed on leather wearing apparel imported from Uruguay. Accordingly, on October 21, 1980, the Commission instituted preliminary countervailing duty investigation No. 701-TA-68 (Preliminary) under section 703(a) of the Tariff Act of 1930 (19 U.S.C. 1671b(a)) to determine whether there is a reasonable indication that an industry in the United States is materially injured or is threatened with material injury, or the established of an industry in the United States is materially retarded,[3] by reason of imports from Uruguay of leather wearing apparel provided for in TSUS item 791.76. The statute directs that the Commission make its determination within 45 days of receipt of the petition or in this case by December 1, 1980. On November 5, 1980, the Department of Commerce issued a notice announcing that it had found the petition to be properly filed within the meaning of its rules and that it was instituting an investigation. Notice to such effect was published in the Federal Register of November 12, 1980 (45 FR 74743). The product scope of the Commerce investigation is the same as that instituted by the Commission.

Notice of the institution of the Commission's investigation and of the public conference to be held in connection therewith was duly given by

[1] The record is defined in sec. 207.2(j) of the Commission's Rules of Practice and Procedure (19 CFR 207.2(j)).

[2] Vice Chairman Calhoun determined that there is a reasonable indication that an industry in the United States is being materially injured or is threatened with material injury by reason of the subject imports.

[3] Material retardation was not an issue in this investigation.

posting copies of the notice in the Office of the Secretary, U.S. International Trade Commission, Washington, D.C., and by publishing the notice in the Federal Register of October 29, 1980 (45 FR 71690). A public conference was held in Washington, D.C., on November 12, 1980.

In arriving at its determination, the Commission has given due consideration to the information provided by the Department of Commerce, to all written submissions from interested parties, and to information adduced at the conference and obtained by the Commission's staff from questionnaires and other sources, all of which have been placed on the administrative record of this preliminary investigation.

Views of the Commission

Determination

On the basis of the record developed in investigation No. 701-TA-68 (Preliminary), we determine that there is a reasonable indication that an industry in the United States is threatened with material injury,[4] by reason of imports from Uruguay of leather wearing apparel, allegedly subsidized by the Government of Uruguay.

Discussion

Section 703(a) of the Tariff Act of 1930 (19 U.S.C. 1671b(a)) directs that, within 45 days after a petition is filed under section 702(b), the Commission—

shall make a determination, based upon the best information available to it at the time of the determination, of whether there is a reasonable indication that—

(1) an industry in the United States—(A) is materially injured, or (B) is threatened with material injury, or (2) the establishment of an industry in the United States is materially retarded,[5]

by reason of imports of the merchandise which is the subject of the investigation by the administering authority.

In order to reach a decision we are required to define the domestic industry, review available information for reasonable indications of material injury or threat of material injury, and find a nexus between these reasonable indications and the subject imports.

Domestic industry

In the present case we find the like product to be leather coats and jackets for men and boys, and women and girls, and other articles of leather wearing apparel, provided for in item 791.76 of the Tariff Schedules of the United States (TSUS). These products are virtually identical to the articles being imported from Uruguay.[6] Thus we find the industry to consist of those firms producing leather wearing apparel in the United States. Information gathered during this and other investigations indicates that approximately 100 firms produce such articles in the United States, the majority of which are small firms which enter or leave the industry depending on market and seasonal conditions.[7]

Volume of imports

From 1975 to 1978, imports of leather wearing apparel from Uruguay increased 277 percent by quantity,[8] and as a share of apparent U.S. consumption increased from 4.1 to 8.3 percent.[9] Imports from Uruguay dropped suddenly and severely in 1979, following the imposition of an export tax by the Government of Uruguay and again in January–August 1980 when compared to the corresponding period of 1979. Uruguay's share of apparent domestic consumption fell to 3.3 percent in 1979 and remained at that level through August 1980.[10] The fact that imports from Uruguay declined in this sudden and precipitous manner suggests factors other than loss of competitiveness of Uruguayan products in the U.S. market as contributing to the decline. These factors are discussed further in the section of this opinion dealing with reasonable indication of threat of material injury.[11]

Effect of imports on prices

The Commission's preliminary comparisons of average unit values of U.S. producers' domestic shipments and imports from Uruguay show unit values of subject imports of men's leather coats and jackets to be 23 percent less than comparable domestic shipments in 1978. These fell to 30 percent less in 1980.[12] Unit values of women's coats and jackets from Uruguay were 58 percent less than the comparable U.S.-made articles in 1978; this margin decreased to 47 percent in 1980,[13] due to increased demand for women's leather jackets and blazers, which were less expensive apparel items than the longer coats.

Condition of the domestic industry

Data compiled from responses to Commission questionnaires from 16 major producers of leather wearing apparel accounting for 59 percent of industry shipments in 1978 show significant and ongoing deterioration of the domestic industry producing leather wearing apparel. The quantity of shipments declined 20 percent from 1975 to 1979, and fell 34 percent in January–August 1980 from the corresponding period of 1979.[14] Utilization of productive capacity declined in each year from 1977 to 1979, and again in January–August 1980, dropping under 50 percent in this latest period. Employment of production and related workers declined over the period 1977 to 1979,[15] as has the amount of orders for leather apparel taken but not shipped—an indication of declining demand by retailers for U.S. producers' products.[16]

Profit and loss data for 9 major producers of leather wearing apparel which account for 46 percent of industry shipments show that net operating profit remained stagnant at a very low level throughout the period, rising above 3 percent of net sales only in 1978.[17]

The vulnerability of the domestic industry is probably understated by the data. Because of the time limitations implicit in preliminary investigations, the Commission's staff concentrated on collecting data from the 20 largest firms in the industry, which constitute approximately 60 percent of total industry shipments.[18] The condition of the remainder of the industry, characterized by small firms that lack the productive capacity, fixed assets, access to capital and ability to carry inventory of the larger firms, is probably worse, and therefore even less capable than the major producers of withstanding competition from subsidized imports.[19]

---

[4] Vice Chairman Calhoun determined reasonable indication with regard to material injury or the threat of material injury. In preliminary cases, Vice Chairman Calhoun uses the broadest possible description of the economic health of the industry as it is not always possible to find with precision whether material injury is threatened or is present.

[5] Establishment of an industry is not an issue in this investigation and will not be further discussed.

[6] Report, pp. A-9, A-11.

[7] Report, pp. A-6-7.

[8] Report, p. A-12.

[9] Report, p. A-21.

[10] Report, p. A-21.

[11] It is Vice Chairman Calhoun's view that the current import penetration of about 3.3 percent of apparent U.S. consumption, given the weakened state of the domestic industry due to declining domestic consumption of these articles, raises a question as to the existence of present injury.

[12] Report, p. A-22.

[13] Report, p. A-22.

[14] Report, p. A-14.

[15] Report, p. A-18.

[16] Report, p. A-18-19.

[17] Report, p. A-20.

[18] Report, p. A-14.

[19] Commissioner Stern notes that for this reason the data available for only part of the industry was considered representative of the whole industry. In another preliminary investigation, *Certain Public Works Castings from India* (investigation No. 303-TA-13 (Preliminary), USITC Pub. No. 950, April 1980), there was also a strong inference that additional information would confirm the limited data available at that time and the Commission reached an affirmative finding. In contrast, in the recent case on *Portable Electric Nibblers from*

Footnotes continued on next page

Threat of material injury

Under the statute an affirmative finding on the question of threat of material injury "must be based upon information showing that the threat is real and injury is imminent, not a mere supposition or conjecture."

Although imports of leather wearing apparel from Uruguay declined noticeably in both 1979 and January–August 1980 from the previous periods, at its apogee in 1978 Uruguay was the fourth largest source of imports of these products,[20] accounting for 10.2 percent of total imports and 8.3 percent of apparent U.S. consumption in that year. In 1978, a countervailing duty investigation on imports of leather wearing apparel from Uruguay by the Commission resulted in an unanimous affirmative determination.[21] Data for the period 1975 to 1978 clearly demonstrated the capability of Uruguayan producers to rapidly increase their exports of these articles to the United States at competitive prices; and the present Commission recognizes that such increased quantities may be capable of injuring the domestic industry producing these products.

As noted previously, imports from Uruguay have declined precipitously in 1979 and 1980. There are a number of reasons for this decline. Economic conditions in the United States are certainly a factor in the decline of both U.S. producers' shipments as well as imports of leather wearing apparel. While imports from all sources declined 19 percent, and domestic shipments declined 2 percent by value from 1978 to 1979, imports from Uruguay declined 64 percent over the same period. The decline in imports from Uruguay in January–August 1980 also substantially exceeded declines of total imports and U.S. producers' shipments.[22] This import trend suggests to us that another factor, in addition to the general decline in demand, explains this decline in exports to the United States from Uruguay.

Preliminary evidence indicates that the actions taken by the Government of Uruguay in response to the affirmative countervailing duty decision by the U.S. Department of the Treasury and this Commission in early 1978 were an additional factor. As part of its negotiation with Treasury to waive the countervailing duty, Uruguay agreed to phase out its chief export subsidy on leather wearing apparel.[23] On February 16, 1979, the Government of Uruguay imposed an export tax on leather wearing apparel and other items exported to the United States, to offset subsidies found on these items by Treasury, while simultaneously doubling a subsidy provided to tanners of leather on leather products exported to third countries.[24] This export tax was subsequently revoked on or about July 1, 1980, and the revocation made retroactive to January 1, 1980. The tanners' subsidy on exports to the United States, which was eliminated on January 10, 1979, was reinstated on May 1, 1980, and made retroactive to the date of elimination.[25] The petitioner has stated that the tanners' subsidy to third countries has been eliminated. The U.S. Department of Commerce, which is investigating these subsidies, has been unable to verify these allegations.

This Commission has observed that the sharp drop in imports of leather wearing apparel from Uruguay tracked very closely with that country's imposition of a tax on exports to the United States and the instatement of incentives for exports to third countries. Likewise, the removal of the export tax and the reported reintroduction of various subsidies in mid-1980 is likely to result in a renewal of increased exports of leather wearing apparel to the United States. Although import data on a month to month basis is available only through September 1980, preliminary analysis shows the value of imports from Uruguay increasing from $253,000 in June of 1980 to $1,149,000 in July of 1980, an increase of 354 percent in just one month. Imports for the months of August and September are valued at over $700,000 in each month. These robust increases in the last three months for which import data are available coincide with the reimposition of the aforementioned subsidies by the Government of Uruguay, and point to a reasonable indication of a threat to the domestic industry that is "real and imminent."

Conclusion

On the basis of increasing imports over the period in which an import "remedy" was not in effect, declining economic trends in the industry (particularly from 1975–1978), recently increasing imports at a time of declining demand, stimulated by reimposition of subsidies by the Government of Uruguay, we conclude that there is a reasonable indication that the domestic industry producing leather wearing apparel is threatened with material injury, by reason of imports from Uruguay upon which subsidies are allegedly provided by the Government of Uruguay.

Issued: December 1, 1980.

By Order of the Commission:

Kenneth R. Mason,

Secretary.

[FR Doc. 80-38424 Filed 12-10-80; 8:45 am]

BILLING CODE 7020-02-M

Footnotes continued from last page *Switzerland* (investigation No. 731-TA-35 (Preliminary), USITC Pub. No. 1108, November 1980), in which the Commission made a negative ruling, it was clear that better profit data would not be available in a final investigation and the available data did not support an affirmative finding.

[20] Report, p. A-9.

[21] U.S. International Trade Commission Publication 883, *Leather Wearing Apparel from Uruguay*, April 1978. Chairman Alberger and Commissioners Moore and Bedell voted in the affirmative in that investigation. Vice Chairman Calhoun and Commissioner Stern were not members of the Commission at that time.

[22] Report, p. A-10.

[23] Federal Register, June 1, 1978 (43 F.R. 23709).

[24] Federal Register, March 22, 1979 (44 F.R. 17485).

[25] Department of State telegram to the Office of the United States Trade Representative, May 8, 1980. The telegram is labeled exibit #6 in Petitioner's exhibit filed with the Commission at its conference in the present case. The authenticity of the telegram and the accuracy of the contents therein have been independently verified by the staff with representatives of Commerce.

NATIONAL ALCOHOL FUELS COMMISSION

Open Meeting

AGENCY: U.S. National Alcohol Fuels Commission.

DATE: December 15, 1980

TIME: 2:00 p.m. to 5:00 p.m.

PLACE: Room 1202, Dirksen Senate Office Building, Washington, D.C.

TYPE OF MEETING: Open Meeting.

CONTACT PERSON: James M. Childress, Executive Director.

WRITTEN STATEMENTS: Not Applicable.

PURPOSE OF COMMISSION: The U.S. National Alcohol Fuels Commission, was established under Section 170 of the Surface Transportation Assistance Act of 1978 (Pub. L. 95-599) to make a full and complete investigation and study of the long- and short-term potential for alchol fuels from biomass and coal to contribute to meeting the nation's energy needs.

TENTATIVE AGENDA: Discussion of Staff Research.

General Business.

James M. Childress,

Executive Director.

December 8, 1980.

Justification of Lateness of Announcement

Because of the extraordinary nature of Congress' post-election session, a satisfactory date suitable for all Commissioner's has been difficult to set. We have only recently been able to schedule December 15, 1980 for our next meeting.

Dated: December 8, 1980.
James M. Childress,
Executive Director.
[FR Doc. 80-38392 Filed 12-10-80; 8:45 am]
BILLING CODE 6820-AN-M

NATIONAL TRANSPORTATION SAFETY BOARD

[N-AR 80-50]

Reports, Recommendations and Responses; Availability

Aircraft Incident Report

AEROMEXICO DC-10-30, XA-DUH, Over Luxembourg, Europe, November 11, 1979 (NTSB-AAR-80-10).—The formal investigation report, releasd by the National Transportation Safety Board on December 3, 1980, indicates that the DC-10-30 Aircraft, Flight 945, entered a prestall buffet and a sustained stall over Luxembourg at 29,800 ft while clilmbing to 31,000 ft en route to Miami, Florida, from Frankfurt, Germany. Visual meteorological conditions prevailed at the time of the incident. Stall recovery was effected at 18,900 ft. After recovery, the crew performed an inflight functional check of the aircraft and, after finding that it operated properly, continued to their intended destination.

After arrival at Miami, it was discovered that portions of both outboard elevators and the lower fuselage tail area maintenance access door were missing. There were no injuries to the 311 persons on board Flight 945. No injuries or damage to personnel or property on the ground were reported.

The Safety Board determined that the probable cause of this incident was the failure of the flightcrew to follow standard climb procedures and to adequately monitor the aircraft's flight instruments. This resulted in the aircraft entering into a prolonged stall buffet which placed the aircraft outside the design envelope.

The Board noted that the flightcrew was distracted, or inattentive to the pitch attitude and airspeed changes as the aircraft approached the stall. The DC-10 was equipped with a stall warning device known as a "stickshaker system" which alerts the crew to an impending stall by introducing a vibration into the pilot's control column. Tests indicated the system functioned, but the crew misinterpreted the warning, believing it to be the result of a vibration in No. 3 engine. When the crew retarded the No. 3 engine thrust level, the resultant decreased thrust aggravated the stall entry. The Board believes that a more explicit stall warning device might have alerted the crew sooner to the aircraft's true condition during its approach to the stall. Since insidious stall problems can be encountered in other than routine flight operations, the Board believes that the stall warning system in the DC 10 should be improved to include either a visual or aural warning device, or both.

Further, the Board expressed concern over the flightcrew's decision to continue their scheduled destination after the incident occurred. The Board indicated that the violent, as well as the unexpected nature of the incident and the flightcrew's initial lack of understanding of the reason for the occurrence, should have been sufficient reason to terminate the flight as soon as practicable.

Aircraft Accident Reports in Brief Format

U.S. Civil Aviation, Issue No. 11 of 1979 Accidents (NTSB-BA-80-8).— The Safety Board on December 2 released its 11th volume of abbreviated reports on selected U.S. General Aviation accidents that occurred last year. The 299 accidents reported in Issue No. 11 represent a random selection. Highlighted in the Safety Board's press release No. SB 80-98 which accompanied the publication is an accident which killed a student pilot who took off into instrument weather conditions despite having only 7.2 hours of flying experience, less than an hour of solo time, and no instrument flight training. The Board has repeatedly warned pilots not to overestimate their own capabilities of those of their aircraft because such mistakes continue to be made by pilots of the broadest range of experience—from beginner students to veterans with thousands of flight hours.

NOTE: The brief formate reports in this publication present the facts, conditions circumstances, and probable cause(s) for each accident. Addtional Statistical information is tabulated by injury index, injuries, and causal factors. While these brief reports contain essential information, more detailed data may be obtained from the original factual reports on file in the Washington office of the Safety Board. Upon request, factual reports will be reproduced commercially at an average cost of 20 cents per page for printed matter, 65 cents per page for black-and-white photographs, and $4.37 per page for color photographs, plus postage. Requests concerning aircraft accident report briefs should include (1) date and place of occurrence, (2) type of aircraft and registration number; and (3) name of pilot. Requests should be addressed to: Public Inquiries Section, National Transportation Safety Board, Washington, D.C. 20594.

Copies of the publication may be purchased from the National Technical Information Service, U.S. Department of Commerce, Springfield, VA 22161.

Marine Accident Report

Fire Onboard the Italian Passenger Ship ANGELINA LAURO, Charlotte Amalie Harbor, St. Thomas, U.S. Virgin Islands, March 30, 1979 (NTSB-MAR-80-16).—The Safety Board's formal investigation report, released December 2, shows that a fire erupted in the crew galley while the ANGELINA LAURO was berthed starboard side to the West Indian Company dock, Charlotte Amalie Harbor. The fire quickly spread from the crew galley to a dining room. The fire was fought onboard by the ship's crew and shoreside firefighters. Heavy smoke impeded firefighting efforts aboard the ship and eventually forced the crew to leave the ship. Firefighting efforts continued to be directed against the exterior of the vessel, but the fire raged out of control throughout the interior spaces until the fire burned itself out 4 day later. The ANGELINA LAURO was almost destroyed. Two persons received minor injuries.

Investigation showed that the fire started in an unattended tilting skillet in the crew galley when cooking oil was overheated and was ignited. The skillet was routinely used by the ship's cooks to deep-fry food. The fire then spread into the grease vapor exhaust hood and duct system, which was laden with a grease film. The fire dampers in the duct were ineffective in stopping the fire's spread, and the fiberglass insulation on the duct burned. As a result, in less than 30 minutes, the fire spread from the main vertical zone (MVZ) in which it started into a dining room in an adjacent MVZ when combustible materials ignited near the red-hot duct in the space between the overhead ceiling and deck above.

The Board determined that the probable cause of the initial fire aboard the ANGELINA LAURO was overheated oil in an unattended skillet in the crew galley. This initial fire propagated and spread throughout the ship and resulted in the ship's destruction because of: (1) the failure of responsible vessel personnel to promptly establish effective control and coordination of the shipboard firefighting effort; (2) failure of the ship's fire detection and sprinkler system to provide early warning of and to extinguish the fire in a concealed overhead space; and (3) the extensive use of combustible materials in the ship's internal construction, which provided fuel for the fire and aided the generation and spread of smoke which hampered firefighting efforts.

Contributing to the spread of the fire were: (1) an accumulation of combustible residues on the interior surfaces of the hood and duct; (2) the routing of the galley's grease vapor exhaust duct through a fire division bulkhead and the failure of those crewmembers who first observed smoke to promptly notify the bridge and sound the fire alarm.

As a result of the accident-investigation, the Safety Board on November 18 issued three recommendation letters containing the following "Class II, Priority Action" recommendations:

—to the *U.S. Coast Guard:*

Examine all passenger vessels operating under its control verification program to insure that cooking appliances that can heat more than a thin film of oil have reliable overheat protection. (M-80-102)

Examine passenger vessels operating under its control verification program which contain combustible materials in their construction to insure that grease vapor exhaust ducts are insulated to provide, at least, "Class A-60" fire resistance when subjected to a Standard Fire Test. (M-80-103)

Require vessel operators to provide proof of periodic cleaning of the interior of grease vapor exhaust ducts on passenger vessels operating under its control verification program. (M-80-104)

Examine passenger vessels operating under its control verification program to insure that firescreen doors that can be closed by remote means cannot injure or trap passengers when closed remotely. (M-80-105)

Conduct unannounced boardings of passenger vessels operating under its control verification program to insure that sprinkler system control valves are immediately ready to deliver their maximum flow of water. (M-80-106)

Develop and implement more stringent requirements for conducting fire drills on passenger vessels operating under its control verification program to determine the crew's familiarity with shipboard fire protection features and their firefighting preparedness. (M-80-107)

Require that passenger vessels operating under its control verification program which contain combustible materials in their construction increase the frequency and coverage of fire detection patrols, particularly for spaces constructed with combustible materials and for spaces, such as galley, have a high risk of fire. (M-80-108)

Require that passsaenger vessels operating under its control verification program which contain combustible materials in their construction install, in all ship spaces including overheads that are not easily accessible for visual observation, an improved means of automatic fire and smoke detection that will insure faster detection than the present temperature-sensitive sprinklers. (M-80-109)

Inform the masters and operators of all passenger vessels operating under its control verification program, by appropriate published means, of the deficiencies discovered in this accident and of corrective actions which the Coast Guard recommends. (M-80-110)

Urge the operators and owners of passenger vessels operating under its control verification program to install an automatic fire extinguishing system to extinguish fires in grease vapor exhaust hoods, and ducts, unless an approved grease extractor serves the cooking equipment, and in cooking appliances that can heat more than a thin film of grease or oil. (M-80-111)

Urge the operators and owners of passenger vessels operating under its control verification program to install suitable uautomnatic fire extinguishing systems in all overhead and other hidden spaces constructed with combustible materials. (M-80-112)

Urge the operators and owners of passenger vessels operating under its control verification program to train all senior officers including safety officers at an approved practicial firefighting school. (M-80-113)

In conjunction with the Federal Emergency Management Agency, assist the Virgin Islands Government in revising its contingency plan to include more comprehensive provisions for rendering firefighting services to vessels calling at its ports, including vessels at anchor in the harbor of Charlotte Amalie. (M-80-114)

—to the *U.S. Virgin Islands:*

Revise its contingency plan to include more comprehensive provisions for rendering firefighting services to vessels calling at Virgin Islands ports, including vessels at anchor in the harbor of Charlotte Amalie. (M-80-115)

Provide training in marine firefighting at an approved practical firefighting school for its supervisory firefighters. (M-80-116)

—to the *Federal Emergency Management Agency:*

In conjunction with the U.S. Coast Guard, assist the Virgin Islands Government in revising its contingency plan to include more comprehensive provisions for rendering firefighting services to vessels calling at its ports, including vessels at anchor in the harbor of Charlotte Amalie. (M-80-117)

This accident was investigated jointly by the Safety Board and the U.S. Coast Guard. Public hearings were held in San Juan, Puerto Rico, from April 4 to April 12, 1979, in St. Thomas, U.S. Virgin Islands, from May 7 to May 12, 1979, and in Boston, Massachusetts, from August 15 to August 17, 1979. The Safety Board's report is based on the factual information developed by the investigation, and was adopted at an open meeting of the Board on September 29, 1980. Chairman James B. King, Vice Chairman Elwood T. Driver, and Members Francis H. McAdams and Patricia A. Goldman participated in the adoption of the report; Member G.H. Patrick Bursley did not participate.

In a separate concurring statement filed with the report, Chairman King and Vice Chairman Driver noted that in the Board's deliberations of the burning of the ANGELINA LAURO, one of the issues discussed was whether passengers face a greater danger from fire on ships which use combustible materials in their construction (Method II) versus ships without such materials in their construction (Method I). A decision on this issue was important to decide whether or not to recommend that the Coast Guard undertake a public information effort to warn prospective travelers on passenger vessels that some foreign vessels contain combustible materials in their construction which increases the risk of serious fire, and to advise them on how to obtain information about ships that have reduced this risk by restricting the use of combustible materials in their construction. Because the Members were evenly divided on this issue, neither a discussion of the relative safety of Method I and Method II construction nor a recommendation was included in the report.

Chairman King and Vice Chairman Driver believe that without being otherwise informed, prospective travelers considering travel on a cruise ship probably assume that one ship is essentially as safe as another. Chariman King and Vice Chairman Driver are concerned that the Coast Guard, even when asked, does not advice the public that there can be a significant disparity in safety depending upon the construction method. They further believe that the proposed recommendation had the additional salutary quality of not creating any further Government regulation. It also had particular merit because of the greater awareness today of the obligation and responsibility of Federal agencies to provide useful and important information to the public they serve.

Responses to Safety Recommendations

Aviation

A-80-80 and -81, from the Federal Aviation Administration, December 2, 1980.—Response is to recommendations issued September 5 as a result of the Safety Board's continuing investigation of leaking motive flow valves, PN AV 16E1182, in Learjet aircraft. (See 45 FR 62231, September 18, 1980.)

FAA does not concur with recommendation A-80-80 which called for issuance of a Telegraphic Maintenance Alert to all owners/operators of Learjet aircraft and FAA Maintenance Inspectors advising them that under no circumstance is any field service to be performed on any ITT General Controls/Aerospace Products motive flow valve installed on a Learjet

aircraft. FAA's rationale is based on the fact that Airworthiness Directive (AD) 80-19-09 specifically prohibits field disassembly and reassembly of motive shutoff valves on gates Learjet aircraft (paragraph A 1.d.) Since the langauge in the AD is very specific in this regard, FAA believes a Telegraphic Maintenance Alert would be redundant and is unnecessary. (A copy of the AD is attached to FAA's letter.)

Recommendation asked FAA to emphasize, in the next issue of the General Aviation Alerts, that field service is not authorized and describe the risks and hazards associated with unauthorized field service of ITT General Controls/Aerospace Products motive flow valves installed on Learjet aircraft. FAA concurs with this recommendation and reports that an alert was published in the November issue of AC 43-16, page 6. In addition, this subject will be highlighted in the Daily Summary of Aviation Standards Service Difficulty Reports (General and Commercial, dated November 18, 1980, control number 09180029); copies of these publications will be provided to the board when available.

Marine

M-79-49, from Ocean Drilling & Exploration Company (ODECO), November 24, 1980.—Letter is in response to the Safety Board's letter of November 21, 1979, which provided comments on ODECO's response of October 18, 1979 (44 FR 65829, November 15, 1979) describing steps taken by ODECO to enhance the safety of operation of its mobile, self-elevating drilling units. The recommendation was issued following investigation of the capsizing and sinking of the self-elevating mobile offshore drilling unit OCEAN EXPRESS in the Gulf of Mexico on april 15, 1976. The recommendation asked ODECO to review and revise the operating manuals for its existing self-elevating mobile offshore drilling units to include guidance regarding: (1) the stability of the unit for the complete range of mat-platform separations; (2) the number of tugs and the horsepower required for arrangements and equipment; (3) contingency plans for emergencies afloat, including towing mishaps and severe weather; (4) transit preparations, including an appropriate checklist; (5) the expected results of exceeding the design limits for jacking operations; and (6) the minimum wind speeds, sea conditions, and unit motions which would result in instability or structural failure.

ODECO's November 24 letter, reporting on the operation Manuals and Stability, notes that all units of U.S. Registry and all unregistered units operating in U.S. waters must meet the new U.S. Coast Guard Regulations. As indicated in the October 18, 1979, response, ODECO has to assess or re-assess the stability of some 22 mobile offshore drilling units in the above category and in most cases this effectively means completely new or extensively modified and expanded manuals. These all have to be submitted for Coast Guard approval, which is in addition to work on ODECO's foreign-flag units. ODECO states that it will take considerable time to complete all the background work as well as the manuals for all of these units under recent inspection.

Further, ODECO notes that the new Manual for the self-elevating unit OCEAN PRIDE was submitted to the board on July 29, 1980, and that others will be submitted when Coast Guard approval is received. ODECO provided a copy of the recently completed Manual for the submersible unit JOHN HAYWARD which addresses equivalent situations.

M-80-89, from the National Oceanic and Atmospheric Administration, November 28, 1980.—Response is to a recommendation issued October 1 following investigation of the grounding of the SS FRONTENAC in Lake Superior, Silver Bay, Minn., November 22, 1979. The recommendation asked that NOAA modify the large scale inset charts of all prominent harbors, such as Silver Bay shown on NOAA Chart No. 14967, by including approaches extending at least 1 mile from the harbor entrance. (See 45 FR 68815, October 16, 1980.)

NOAA concurs with the recommendation and plans to extend the chart coverage of the approach to Silver Bay and Taconite Harbor on the next edition of Chart 14967. (A 50-percent reduction of the proposed chart format was provided with NOAA's response.) NOAA is also studying requirements for expanding approaches on insets of harbors on other charts. The need and feasibility to reformat will be made on a chart-by-chart basis.

M-80-100 and -101, from the American Waterways Operators, Inc. (AWO), November 4, 1980.—Response is to recommendations issued October 21 in connection with the investigation of the collision of the Liberian tankship M/V PINA and the towboat MR. PETE in the Lower Mississippi River, December 19, 1979. Recommendation M-80-100 asked AWO to notify member companies of the need for each company to establish procedures whereby it can insure that only properly licensed personnel are employed to operate towboats on the inland waterways and western rivers of the United States. Recommendation M-80-101 asked AWO to notify member companies of the availability of manufactured portable barge navigation lights acceptable to the U.S. Coast Guard as meeting the requirements of the Rules of the Road and of the need to use only such portable lights on their barges. (See 45 FR 75028, November 13, 1980.)

In response to these recommendations, AWO states that in lieu of notifying its members individually, it is proposed to publish the following statement in the weekly newsletter:

> Because of its findings on a case involving a collision between a tankship and a tow, the National Transportation Safety Board has recently requested AWO to:
>
> (1) Notify the towing industry of the need for each company to establish procedures whereby it can insure that only properly licensed personnel are employed to operate towboats.
>
> (2) Notify the towing industry of the need to use only portable barge navigation lights which meet the requirements of the Rules of the Road.
>
> AWO does not believe that there is a real need to inform its members of the foregoing, but does favor the dissemination of such information on an industry-wide basis and is hopeful that the "word" will spread more rapidly by placing the above information in this edition of the WEEKLY LETTER.

AWO states that as an organization, it has supported the two ideas expressed in the recommendations and has pursued the adoption of such through work with the Coast Guard, its own membership, and Congressional testimony for more than 10 years. AWO believes that the word needs to get to nonmember companies and that this can be most effectively accomplished through an open newsletter item rather than through individual communication with each member.

Railroad

R-78-37, R-78-39, R-79-32, R-79-33, R-79-35, and R-79-36, from National Railroad Passenger Corporation (Amtrak), November 28, 1980.—Letter is in response to the Safety Board's comments of October 8 concerning Amtrak's previous response of last May 16 (45 FR 43290, June 26, 1980) to recommendations resulting from investigation of the Seabrook, Md., commuter and passenger train collision on June 9, 1978.

With reference to recommendation R-78-37, which concerned the correction of defective cab signal systems on commuter cars and locomotives so that the systems will function as intended,

the Safety Board on October 8, noting that all such defective systems have been corrected, classified the recommendation as "Closed—Acceptable Action."

The Board noted that Amtrak's description of its cab signal system does not comply with the intent of recommendation R-78-39, which concerned the equipping of all trains operating on the Northeast Corridor with an automatic train control system requiring, until such systems can be implemented, that all "stop and proceed" signals be regarded as "stop and stay" signals. The Board noted that the systems described by Amtrak were in operation before the accident and, in the Board's opinion, do not provide the necessary level of protection. Amtrak's November 28 response provides a copy of a timetable instruction which was issued as a result of the Board's recommendation. This instruction requires certain actions to be taken when a train is not equipped with a speed control system.

With respect to recommendation R-79-32, concerning the operation on the northeast corridor of certain commuter cars by the State of New Jersey without the correction of injury-producing features of their interiors, the Safety Board's October 8 letter indicates that the Board understands that some changes have been made to the interiors of these cars. The Board stated that until they have been corrected by eliminating all of the injury-producing features, the recommendation will be held in an "Open—Unacceptable Action" status. The Board asked to be advised whether any restrictions have been placed on the operation of these cars when they are used on Amtrak trains. In response, Amtrak reports that the State of New Jersey has again been requested to supply a progress report on the modification of the commuter car interiors to correct injury-producing features. All cars will be withdrawn to make these changes, and Amtrak will advise the Board as soon as a reply is received.

Recommendation R-79-33 refers to the training and the qualifying of crewmembers operating trains over the Northeast Corridor of Amtrak. The Board said it was pleased to learn that rules classes have been arranged for the train and engine service personnel but continues to believe that it is Amtrak's responsibility to determine that all crewmembers are qualified properly before they can operate Amtrak trains on the Northeast Corridor. The Board advised on October 8 that recommendation R-79-33 was being held in an "Open—Unacceptable Action" status. In response, Amtrak states that, as indicated in its previous letter, it does not promote Train and Engine Service employees to conductors and/or enginemen. This is the responsibility of the carriers that operate Amtrak trains. On the Amtrak-owned tracks of the Northeast Corridor, Amtrak has required the crews of other carriers operating over these tracks to be qualified on Amtrak's Book of Operating Rules, Special Instructions and Timetable as well as the physical characteristics. Failure to be qualified restricts the carrier's employee from operating over Amtrak tracks. Periodic checks have been made to ensure compliance.

Amtrak's November 28 letter further states, "We cannot and will not permit unqualified people to operate our trains or to operate freight trains over our tracks. Our personnel have made efficiency checks at reporting locations and points where freight trains enter the Northeast Corridor to determine that the crews are qualified. When they were unable to show proof of qualification, they were relieved and not permitted to operate over Northeast Corridor tracks. We realize that it is Amtrak's responsibility to ensure that people are properly qualified. We have accepted and intend to pursue this responsibility."

The Safety Board on October 8, with reference to recommendation R-79-35 which referred to the training of emergency rescue organizations along passenger train routes, noted that Amtrak was circulating copies of the Amtrak emergency evacuation procedures to the varius organizations located along the Northeast Corridor routes. The Board acted to classify this recommendation "Closed—Acceptable Alternate Action."

With respect to recommendation R-79-36, which referred to training of crew-members in the proper procedures for providing care to passengers in derailment and emergency situations, the Board noted that Amtrak has begun a training program for its personnel in standard, Red Cross, first-aid procedures. Since this meets the intent of the recommendation, the Board on October 8 classified recommendation R-79-36 as "Closed—Acceptable Action."

R-8-48, from the Urban Mass Transportation Administration, November 12, 1980.—Response is to a recommendation issued October 24 following investigation of the derailment of a Western Pacific freight train at Hayward, Calif., April 9, 1980. The recommendation asked UMTA to require other rapid transit operations to establish adequate mutual emergency notification procedures in instances where rapid transit trains operate in close proximity to an operational railroad line. (See 45 FR 79207, November 28, 1980.)

In response, UMTA reports taking the following action: All U.S. Rail transit properties will be requested to send to UMTA a copy of notification procedures used in mutual emergencies in instances where rapid transit trains operate in close proximity to an operational railroad line. If such procedures do not exist, UMTA is requesting the manager of the property to take steps to establish these procedures and to advise UMTA of a schedule to do so.

Note.—Single copies of Safety Board reports are available without charge, as long as limited supplies last. Copies of Board recommendation letters, responses and related correspondence are also provided free of charge. All requests for copies must be in writing, identified by recommendation or report number. Address requests to: Public Inquiries Section, National Transportation Safety Board, Washington, D.C. 20594.

Multiple copies of Safety Board reports may be purchased from the National Technical Information Service, U.S. Department of Commerce, Springfield, Va. 22161.

(49 U.S.C. 1903(a)(2), 1960)

Margaret L. Fisher,

Federal Register Liaison Officer.

December 5, 1980.

[FR Doc. 80-38379 Filed 12-10-80; 8:45 am]

BILLING CODE 4910-58-M

NUCLEAR REGULATORY COMMISSION

[Docket No. 50-245]

Connecticut Light and Power Co., et al.; Granting of Relief From Certain Requirements of ASME Code Section XI Inservice Inspection (Testing) Requirements

The U.S. Nuclear Regulatory Commission (the Commission) has granted relief from certain requirements of the ASME Code, Section XI, "Rules for Inservice Inspection of Nuclear Power Plant Components" to the Northeast Nuclear Energy Company, The Hartford Electric Light Company, Western Massachusetts Electric Company, and Connecticut Light and Power Company. The relief relates to the inservice inspection (testing) program for the Millstone Nuclear Power Station, Unit No. 1 (the facility) located in Waterford, Connecticut. The ASME Code requirements are incorporated by reference into the Commission's rules and regulations in 10

CFR Part 50. The relief is effective as of its date of issuance.

The relief allows postponement of the Category B-L-2 examination beyond the inspection interval ending December 28, 1980, until major maintenance is performed on the pumps, pursuant to 10 CFR 50.55a(g)(6)(i) of the Commission's regulations.

The request for relief complies with the standards and requirements of the Atomic Energy Act of 1954, as amended (the Act), and the Commission's rules and regulations. The Commission has made appropriate findings as required by the Act and the Commission's rules and regulations in 10 CFR Chapter I, which are set forth in the letter granting relief. Prior public notice of this action was not required since the granting of relief from ASME Code requirements does not involve a significant hazards consideration.

The Commission has determined that the granting of relief will not result in any significant environmental impact and that pursuant to 10 CFR 51.5(d)(4) an environmental impact statement or negative declaration and environmental impact appraisal need not be prepared in connection with issuance of this action.

For further details with respect to this action, see (1) the request for relief dated April 9, 1980, and supplement thereto dated June 10, 1980, (2) the Commission's letter to the licensee dated November 19,1980, and (3) the Commission's related Safety Evaluation. All of these items are available for public inspection at the Commission's Public Document Room, 1717 H Street, N.W., Washington, D.C. 20555 and at the Waterford Public Library, Rope Ferry Road, Route 156, Waterford, Connecticut 06385. A copy of items (2) and (3) may be obtained upon request addressed to the U.S. Nuclear Regulatory Commission, Washington, D.C. 20555, Attention: Director, Division of Licensing.

Dated at Bethesda, Maryland, this 19th day of November, 1980.

For the Nuclear Regulatory Commission.

Dennis M. Crutchfield,

Chief, Operating Reactors Branch No. 5, Division of Operating Reactors.

[FR Doc. 80-38403 Filed 12-10-80; 8:45 am]

BILLING CODE 7590-01-M

[Docket No. 50-213]

Connecticut Yankee Atomic Power Co.; Issuance of Amendment to Facility Operating License

The U.S. Nuclear Regulatory Commission (the Commission) has issued Amendment No. 36 to Facility Operating License No. DPR-61, issued to Connecticut Yankee Atomic Power Company (the licensee), which revised the Technical Specifications for operation of the Haddam Neck Plant (the facility), located in Middlesex County, Connecticut. The amendment is effective as of its date of issuance.

The amendment revises the withdrawal schedule of the reactor vessel material survelliance capsules and also revises the Administrative Controls Sections of Appendices A and B Technical Specifications to reflect current organizational structure and titles.

The applications for the amendment complies with the standards and requirements of the Atomic Energy Act of 1954, as amended (the Act), and the Commission's rules and regulations. The Commission has made appropriate findings as required by the Act and the Commission's rules and regulations in 10 CFR Chapter I, which are set forth in the license amendment. Prior public notice of this amendment was not required since the amendment does not involve a significant hazards consideration.

The Commission has determined that the issuance of this amendment will not result in any significant environmental impact and that pursuant to 10 CFR 51.5(d)(4) and environmental impact statement or negative declaration and environmental impact appraisal need not be prepared in connection with issuance of this amendment.

For further details with respect to this action, see (1) the application for amendment dated February 14, 1978 and supporting information submitted by letter dated March 30, 1979, and the applications for amendment dated September 5, 1978, April 28 and July 16, 1980, (2) Amendment No. 36 to License No. DPR-61, and (3) the Commission's Public Document Room, 1717 H Street, NW., Washington, D.C. 20555 and at the Russell Library, 119 Broad Street, Middletown, Connecticut 06457. A single copy of items (2) and (3) may be obtained upon request addressed to the U.S. Nuclear Regulatory Commission, Washington, D.C. 20555, Attention: Director, Division of Licensing.

Dated at Bethesda, Maryland, this 2nd day of December, 1980.

For the Nuclear Regulatory Commission.

Dennis M. Crutchfield,

Chief, Operating Reactors Branch No. 5, Division of Licensing.

[FR Doc. 80-38406 Filed 12-10-80; 8:45 am]

BILLING CODE 7590-01-M

Draft Regulatory Guide; Issuance and Availability

The Nuclear Regulatory Commission has issued for public comment a draft of a proposed revision to a guide in its Regulatory Guide Series together with a draft of the associated value/impact statement. This series has been developed to describe and make available to the public methods acceptable to the NRC staff of implementing specific parts of the Commission's regulations and, in some cases, to delineate techniques used by the staff in evaluating specific problems or postulated accidents and to provide guidance to applicants concerning certain of the information needed by the staff in its review of applications for permits and licenses.

The draft, temporarily identified by its task number, RS 902-4 (which should be mentioned in all correspondence concerning this draft guide), is a second proposed Revision 3 to Regulatory Guide 1.33 and is entitled "Quality Assurance Program Requirements (Operation)." The guide is being developed to describe a method acceptable to the NRC staff for complying with the Commission's regulations with regard to overall quality assurance program requirements for the operation phase of nuclear power plants. Since the first proposed Revision 3 to Regulatory Guide 1.33 was issued for public comment in August 1979, much guidance concerning quality assurance has been developed through assessment of the accident at Three Mile Island by various organizations. In addition, ANSI N18.7-1976/ANS 3.2, "Administrative Controls and Quality Assurance for the Operational Phase of Nuclear Power Plants," which is endorsed by the regulatory guide, is undergoing extensive revision in an effort to provide more definitive quality assurance program requirements. Because additional guidance has been incorporated into the revisions of the ANSI standard and the regulatory guide, this second proposed Revision 3 to Regulatory Guide 1.33 is being issued for public comment to obtain additional public input on the proposed regulatory guidance.

Further revision to this guide is anticipated before the active guide is issued as a result of planned changes to the Commission's regulations, the recommendations of studies and investigations in progress, and public comment expected on this draft.

This draft guide and the associated value/impact statement are being issued to involve the public in the early stages of the development of a regulatory

position in this area. They have not received complete staff review and do not represent an official NRC staff position.

Public comments are being solicited on both drafts, the guide (including any implementation schedule) and the draft value/impact statement. Comments on the draft value/impact statement should be accompanied by supporting data. Comments on both drafts should be sent to the Secretary of the Commission, U.S. Nuclear Regulatory Commission, Washington, D.C. 20555, Attention: Docketing and Service Branch, by January 30, 1981.

Although a time limit is given for comments on these drafts, comments and suggestions in connection with (1) items for inclusion in guides currently being developed or (2) improvements in all published guides are encouraged at any time.

Regulatory guides are available for inspection at the Commission's Public Document Room, 1717 H Street NW., Washington, D.C. Requests for single copies of draft guides (which may be reproduced) or for placement on an automatic distribution list for single copies of future draft guides in specific divisions should be made in writing to the U.S. Nuclear Regulatory Commission, Washington, D.C. 20555, Attention: Director, Division of Technical Information and Document Control. Telephone requests cannot be accommodated. Regulatory guides are not copyrighted, and Commission approval is not required to reproduce them.

(5 U.S.C. 552(a))

Dated at Rockville, Maryland this 2nd day of December 1980.

For the Nuclear Regulatory Commission.

Guy A. Arlotto,

Director, Division of Engineering Standards, Office of Standards Development.

[FR Doc. 80-38405 Filed 12-10-80; 8:45 am]

BILLING CODE 7590-01-M

[Docket Nos. 50-277 O.L. & 50-278 O.L.]

Philadelphia Electic Co., et al. (Peach Bottom Atomic Power Station, Units 2 and 3); Reconstitution of Atomic Safety and Licensing Appeal Board

Notice is hereby given that, in accordance with the authority conferred by 10 CFR 2.787(a), the Chairman of the Atomic Safety and Licensing Appeal Panel has assigned the following panel members to serve as the Atomic Safety and Licensing Appeal Board for this operating license proceeding: Thomas S. Moore, Chairman, Dr. John H. Buck, Dr. W. Reed Johnson.

Dated: December 5, 1980.

C. Jean Bishop,

Secretary to the Appeal Board.

[FR Doc. 80-38406 Filed 12-10-80; 8:45 am]

BILLING CODE 7590-01-M

[Docket Nos. 50-354 & 50-355]

Public Service Electric & Gas Co. and Atlantic City Electric Co. (Hope Creek Generating Station, Units 1 and 2); Reconstitution of Atomic Safety and Licensing Appeal Board

Notice is hereby given that, in accordance with the authority conferred by 10 CFR 2.787(a), the Chairman of the Atomic Safety and Licensing Appeal Panel has assigned the following panel members to serve as the Atomic Safety and Licensing Appeal Board for this construction permit proceeding: Richard S. Salzman, Chairman, Dr., W. Reed Johnson, Christine N. Kohl.

Dated: December 5, 1980.

C. Jean Bishop,

Secretary to the Appeal Board.

[FR Doc. 80-38407 Filed 12-10-80; 8:45 am]

BILLING CODE 7590-01-M

Regulatory Guide; Issuance and Availability

The Nuclear Regulatory Commission has issued a revision to a guide in its Regulatory Guide Series. This series has been developed to describe and make available to the public methods acceptable to the NRC staff of implementing specific parts of the Commission's regulations and, in some cases, to delineate techniques used by the staff in evaluating specific problems or postulated accidents and to provide guidance to applicants concerning certain of the information needed by the staff in its review of applications for permits and licenses.

Regulatory Guide 3.44, Revision 1, "Standard Format and Content for the Safety Analysis Report for an Independent Spent Fuel Storage Installaton (Water-Basin Type)," identifies the information needed by the NRC staff in its review of the Safety Analysis Report for a proposed independent spent fuel storage installation and suggests a format for presenting this information. This revision to the guide reflects actions taken in response to public comments on 10 CFR Part 72, "Licensing Requirements for the Storage of Spent Fuel in an Independent Spent Fuel Storage Installation," which was published as a proposed rule on October 6, 1978, (43 FR 46309), and on the original version of this guide issued in December 1978.

Comments and suggestions in connection with (1) items for inclusion in guides currently being developed or (2) improvements in all published guides are encouraged at any time. Comments should be sent to the Secretary of the Commission, U.S. Nuclear Regulatory Commission, Washington, D.C. 20555, Attention: Docketing and Service Branch.

Regulatory guides are available for inspection at the Commission's Public Document Room, 1717 H Street NW., Washington, D.C. Copies of active guides may be purchased at the current Government Printing Office price. A subscription service for future guides in specific divisions is available through the Government Printing Office. Information on the subscription service and current prices may be obtained by writing to the U.S. Nuclear Regulatory Commission, Washington, D.C. 20555, Attention: Publications Sales Manager.

(5 U.S.C. 552(a))

Dated at Rockville, Maryland this 1st day of December 1980.

For the Nuclear Regulatory Commission.

Ray G. Smith,

Acting Director, Office of Standards Development.

[FR Doc. 80-38404 Filed 12-10-80; 8:45 am]

BILLING CODE 7590-01-M

[Docket Nos. 50-259, 50-260 and 50-296]

Tennessee Valley Authority; Consideration of Amendments to Facility Operating Licenses

The U.S. Nuclear Regulatory Commission (the Commission) has received a request dated July 31, 1980, which was subsequently amended by letter dated November 17, 1980, for issuance of amendments to Facility Operating License Nos. DPR-33, DPR-52 and DPR-68, issued to Tennessee Valley Authority (the licensee), for Browns Ferry Nuclear Plant, Unit Nos. 1, 2 and 3, located in Limestone County, Alabama.

The proposed amendments would entail modification of the authority provided by paragraphs 2.B(5) and 2.D(3) of Licenses DPR-33, DPR-52 and DPR-68 and related license conditions and technical specifications, to authorize the licensee to store onsite the low level radioactive waste generated from operation of the Browns Ferry Plant for a period of five years. In the letter of November 17, 1980, the licensee has requested that the application be noticed in the Federal Register.

Prior to issuance of the proposed license amendments, the Commission

will have made findings required by the Atomic Energy Act of 1954, as amended (the Act) and the Commission's regulations.

By January 12, 1981, the licensee may file a request for a hearing with respect to issuance of the amendments to the subject facility operating licenses and any person whose interest may be affected by this proceeding and who wishes to participate as a party in the proceeding must file a written petition for leave to intervene. Requests for a hearing and petitions for leave to intervene shall be filed in accordance with the Commission's "Rules of Practice for Domestic Licensing Proceedings" in 10 CFR Part 2. If a request for a hearing or petition for leave to intervene is filed by the above date, the Commission or an Atomic Safety and Licensing Board, designated by the Commission or by the Chairman of the Atomic Safety and Licensing Board Panel, will rule on the request and/or petition and the Secretary or the designated Atomic Safety and Licensing Board will issue a notice of hearing or an appropriate order.

As required by 10 CFR 2.714, a petition for leave to intervene shall set forth with particularity the interest of the petitioner in the proceeding, and how that interest may be affected by the results of the proceeding. The petition should specifically explain the reasons why intervention should be permitted with particular reference to the following factors: (1) the nature of the petitioner's right under the Act to be made a party to the proceeding; (2) the nature and extent of the petitioner's property, financial, or other interest in the proceeding; and (3) the possible effect of any order which may be entered in the proceeding on the petitioner's interest. The petition should also identify the specific aspect(s) of the subject matter of the proceeding as to which petitioner wishes to intervene. Any person who has filed a petition for leave to intervene or who has been admitted as a party may amend the petition without requesting leave of the Board up to fifteen (15) days prior to the first prehearing conference scheduled in the proceeding, but such an amended petition must satisfy the specificity requirements described above.

Not later than fifteen (15) days prior to the first prehearing conference scheduled in the proceeding, a petitioner shall file a supplement to the petition to intervene which must include a list of the contentions which are sought to be litigated in the matter, and the bases for each contention set forth with reasonable specificity. Contentions shall be limited to matters within the scope of the amendments under consideration. A petitioner who fails to file such a supplement which satisfies these requirements with respect to at least one contention will not be permitted to participate as a party.

Those permitted to intervene become parties to the proceeding, subject to any limitations in the order granting leave to intervene, and have the opportunity to participate fully in the conduct of the hearing, including the opportunity to present evidence and cross-examine witnesses.

A request for a hearing or a petition for leave to intervene shall be filed with the Secretary of the Commission, U.S. Nuclear Regulatory Commission, Washington, D.C. 20555, Attention: Docketing and Services Branch, or may be delivered to the Commission's Public Document Room, 1717 H Street, NW., Washington, D.C. by the above date. Where petitions are filed during the last ten (10) days of the notice period, it is requested that the petitioner or representative for the petitioner promptly so inform the Commission by a toll-free telephone call to Western Union at (800) 325-6000 (in Missouri (800) 342-6700). The Western Union operator should be given Datagram Identification Number 3737 and the following message addressed to Thomas A. Ippolito: (petitioner's name and telephone number); (date petition was mailed); (plant name); and (publication date and page number of this Federal Register notice). A copy of the petition should also be sent to the Executive Legal Director, U.S. Nuclear Regulatory Commission, Washington, D.C. 20555, and the H. S. Sanger, Jr., Tennessee Valley Authority, 400 Commerce Avenue, E 11B 33 C, Knoxville, Tennessee 37401, General Counsel for the licensee.

Nontimely findings of petitions for leave to intervene, amended petitions, supplemental petitions and/or requests for hearing will not be entertained absent a determination by the Commission or the presiding officer of the Atomic Safety and Licensing Board designated to rule on the petition and/or request, that the petitioner has made a substantial showing of good cause for the granting of a late petition and/or request. That determination will be based upon a balancing of the factors specified in 10 CFR 2.714(a)(i)-(v) and 2.714(d).

If the requested authority to store on-site the low level waste generated from operation of the Browns Ferry Plant for a period of five years is granted, the Director of Nuclear Reactor Regulation and the Director of Nuclear Materials Safety and Safeguards, acting in concert, may choose not to exercise the Commission's discretion under 10 CFR 50.52 to combine into a single license those activities which would otherwise be licensed severally, if they determine that a separate license would be preferable for the administrative convenience of the Commission.

For further details with respect to this action, see the application for amendments dated July 31, 1980, as amended by letter dated November 17, 1980, which is available for public inspection at the Commission's Public Document Room, 1717 H Street, NW., Washington, D.C. and at the Athens Public Library, South and Forrest, Athens, Alabama 35611.

Dated at Bethesda, Maryland, this 4th day of December, 1980.

For the Nuclear Regulatory Commission.

Thomas A. Ippolito,

Chief, Operating Reactors Branch No. 2, Division of Licensing.

[FR Doc. 80-38409 Filed 12-10-80; 8:45 am]

BILLING CODE 7590-01-M

[Docket No. 50-142; Special Nuclear Material License Docket No. 70-223]

University of California at Los Angeles, (UCLA); Establishment of Local Public Document Room

Notice is hereby given that the Nuclear Regulatory Commission (NRC) has designated the West Los Angeles Regional Library, Los Angeles, California, as the official NRC Local Public Document Room (LPDR) for the proposed license renewal of the University of California at Los Angeles (UCLA) research reactor located at the UCLA campus.

All documents related to the licensee's proposed license renewal and all subsequent documents will be available for inspection and copying at the West Los Angeles Regional Library. The West Los Angeles Regional Library is located at 11360 Santa Monica Boulevard, Los Angeles, California, 90025. The regional library's hours of operation are 10:00 am through 8:00 pm Monday through Thursday and 10:00 am through 5:00 pm Friday and Saturday. Self service reproduction facilities are available to the public at the cost of 10¢ per printed page. For further information, interested parties in the Los Angeles area may contact the LPDR directly through Ms. Judy Horton, Senior Librarian, telephone number (213) 477-9546.

Parties outside the service area of the Los Angeles Regional Library LPDR may address their requests for records to the

NRC's Public Document Room at 1717 "H" Street, N.W., Washington, DC 20555, telephone number (202) 634-3273. The cost of ordering records from the NRC Public Document Room is 5¢ per printed page, plus tax and postage.

Questions concerning the availability of documents at LPDR's or the NRC's local public document room program should be addressed to Ms. Jona L. Souder, Chief, Local Public Document Room Branch, U.S. Nuclear Regulatory Commission, Washington, DC 20555, telephone number (301) 492-7536.

Dated at Bethesda, Maryland, this 5 day of December 1980.

For the Nuclear Regulatory Commission.

Joseph M. Felton,

Director, Division of Rules and Records, Office of Administration.

[FR Doc. 80-38402 Filed 12-10-80; 8:45 am]

BILLING CODE 7590-01-M

OFFICE OF MANAGEMENT AND BUDGET

Agency Forms Under Review

December 8, 1980.

Background

When executive departments and agencies propose public use forms, reporting, or recordkeeping requirements, the Office of Management and Budget (OMB) reviews and acts on those requirements under the Federal Reports Act (44 USC, Chapter 35). Departments and agencies use a number of techniques including public hearings to consult with the public on significant reporting requirements before seeking OMB approval. OMB in carrying out its reponsibility under the Act also considers comments on the forms and recordkeeping requirements that will affect the public.

List of Forms Under Review

Every Monday and Thursday OMB publishes a list of the agency forms received for review since the last list was published. The list has all the entries for one agency together and grouped into new forms, revisions, extensions (burden change), extensions (no change), or reinstatements. The agency clearance officer can tell you the nature of any particular revision you are interested in. Each entry contains the following information:

The name and telephone number of the agency clearance officer (from whom a copy of the form and supporting documents is available);

The office of the agency issuing this form;

The title of the form;

The agency form number, if applicable;

How often the form must be filled out;

Who will be required or asked to report;

The Standard Industrial Classification (SIC) codes, referring to specific respondent groups that are affected;

Whether small businesses or organizations are affected;

A description of the Federal budget functional category that covers the information collection;

An estimate of the number of responses;

An estimate of the total number of hours needed to fill out the form;

An estimate of the cost to the Federal Government;

The number of forms in the request for approval;

The name and telephone number of the person or office responsible for OMB review; and

An abstract describing the need for and uses of the information collection.

Reporting or recordkeeping requirements that appear to raise no significant issues are approved promptly. Our usual practice is not to take any action on proposed reporting requirements until at least ten working days after notice in the Federal Register, but occasionally the public interest requires more rapid action.

Comments and Questions

Copies of the proposed forms and supporting documents may be obtained from the agency clearance officer whose name and telephone number appear under the agency name. The agency clearance officer will send you a copy of the proposed form, the request for clearance (SFF83), supporting statement, instructions, transmittal letters, and other documents that are submitted to OMB for review. If you experience difficulty in obtaining the information you need in reasonable time, please advise the OBM reviewer to whom the report is assigned. Comments and questions about the items on this list should be directed to the OMB reviewer or office listed at the end of each entry.

If you anticipate commenting on a form but find that time to prepare will prevent you from submitting comments promptly, you should advise the reviewer of your intent as early as possible.

The timing and format of this notice have been changed to make the publication of the notice predictable and to give a clearer explanation of this process to the public. If you have comments and suggestions for further improvements to this notice, please send them to Jim J. Tozzi, Assistant Director for Regulatory and Information Policy, Office of Management and Budget, 726 Jackson Place, Northwest, Washington, D.C. 20503.

DEPARTMENT OF AGRICULTURE

Agency Clearance Officer—Richard J. Schrimper—202-447-6201

New

•Food and Nutrition Service
Evaluation of the Child Care Food Program—Wave II
Nonrecurring
Businesses or other institutions
Admin. of Instit. & Child Care Centers which parti. in CCFP
SIC: 948
Public assistance and other income supplements, 347 responses, 381 hours; $253,000 Federal cost, 5 forms
Charles A. Ellett, 202-395-7340
P.L. 95-627 mandates an evaluation of costs, meal quality and barriers to participation in the Child Care Food Program. Wave II data collection, planned for January-April 1981, will provide, validation of the Wave I cost model and measures of participation and administrative practices under regulations revised by P.L. 95-627, which became effective May 1, 1980—thereby providing the basis for adjustments to reimbursements levels, if appropriate.

•Food and Nutrition Service
Food Administrator Survey (FAS) of the National Evaluation of School Nutrition Programs
AG/FNS 1106
Nonrecurring
Businesses or other institutions
State agency director of Child Nutrition, schools, ETC.
SIC: 943
Public assistance and other income supplements, 4,300 responses, 7,556 hours; $324,746 Fedeal cost, 1 form
Charles A. Ellett, 202-395-7340.
No available comprehensive finding describing the operations, targeting and impacts of the School Nutrition Programs currently exist. This evaluation, conducted in response to a congressi request (Senate Resolution 90, Report No. 98-208) addresses each of these issues and will develop forecasting models that can predit program participation.

Revisions

•Economics and Statistics Service
Sugar processor inquiries
Other—See SF83
Businesses or other institutions
Sugar cane and sugar beet refiners
SIC: 206
Small businesses or organizations

Agricultural Research and services, 96 responses; $6,000 Federal cost; 1 form 62 hours
Off. of Federal statistical policy & standard, 202-673-7974.
Provides data to estimate sugarcane acreage, sucrose content, purity polarization, raw sugar and molasses production. Estimates used to keep persons or firms associated with sugarcane production, processing, storage and transportation informed on size, quality and value of the commodity.

DEPARTMENT OF DEFENSE

Agency Clearance Officer—John V. Wenderoth—703-697-1195

Extensions (Burden Change)

•Departmental and Others
MI-V-38352 "Value engineering program requirements"
Other—See SF83
Businesses or other institutions
DOD contractos
Multiple functions, 24 responses, 1,392 hours; 1 form
Kenneth B. Allen; 202-395-3785.
This document established minimum requirements for a contractor's value engineering program when a VE program requirements clause is included in the contract. It could be applied to most DOD contracts. It is not a survey and does not require any contractor reporting but does require the contractor to maintain project files.

Extensions (no change)

•Departmental and Others
Reserve component attitude study
Annually
Individuals or households
Youth:
Department of Defense—Military, 4,500 responses, 2,250 hours; 1 form
Kenneth B. Allen, 202-395-3785.
Generates longitudinal data for trend analysis of propensity and key issues to improve understanding of the enlistment decision process and develop long-range recruiting initiatives to attract and retain personnel for reserve components. Used by DOD to tailor specific market strategies such as 3×3 option, split training and eliminate elistment barriers.

DEPARTMENT OF EDUCATION

Agency clearance Officer—William A. Wooten—202-426-5030

New

•Office of Postsecondary Education
Basic Educational Opportunity Grant (BEOG) Quality Control System
Nonrecurring
Businesses or other institutions
Financial Aid Ofcr. of postsecond. Instit. Stu; Rec. Beog
SIC: 822.
Higher Education, 8,305 responses, 4,610 hours; $2,495,447 Federal cost, 4 forms
Laverne V. Collins, 202-395-6880
The Beog Study will determine: (1) The frequency of application error rates by students, parents, institutions and processors and identify error-prone populations, (2) Why errors occur and their impact on award amounts and applicant acceptance rejection rates, & (3) Corrective measures to eliminate errors. Study begins September 30, 1980.

DEPARTMENT OF ENERGY

Agency Clearance Officer—Irene Montie—202-633-9464

New

• Departmental and Others
Survey of Lifestyles, Food habits and agricultural practices
DP-467
Nonrecurring
Individuals or Households
Households in Iron and Washington Cty., Utah, and Lincoln Cty. Nev.
Small businesses or organizations
Multiple Functions, 760 responses, $19,000 Federal cost, 507 hours, 1 form.
Jefferson B. Hill, 202-395-7340.
This single-time form will be used to collect information on the estimation of radiation dose to the population of Iron and Washington Counties, Utah, and Lincoln County, Nevada, due to nuclear weapons testing at Nevada test site during the period 1951-1962.

Revisions

• Energy Information Administration
Annual Survey of Domestic Oil and Gas Reserves
EIA-23
Annually
Businesses or other institutions
Oil and gas well operators
SIC: 131
Energy information, policy, and regulation, 2,553 responses, $2,500,000 Federal cost, 243,611 hours, 1 form.
Jefferson B. Hill, 202-395-7340.
Data are used to develop a consolidated program to obtain verifiable estimates of crude oil, natural gas and natural gas liquids reserves and production.

Reinstatements

• Departmental and Others.
Survey of the consumption of Selected Hydrocarbon, Coal, and Coke materials by manufacturers-petroleum refinery and chemical plant form
MA-451 MA-452
Annually
Businesses or other institutions
Petroleum refineries, chemical plants, and blast furna
SIC: multiple
Energy information, policy, and regulation, 1,500 responses, $135,000 Federal cost, 1,425 hours, 2 forms.
Jefferson B. Hill, 202-395-7340.
The information collected will be used as an input to Department of Energy policy and to ascertain the probable impact of supply interruptions.

DEPARTMENT OF HEALTH AND HUMAN SERVICES

Agency Clearance Officer—Joseph Strnad—202-245-7488.

New

• National Institutes of Health
A survey to evaluate the reach of high blood pressure media
Messages on health professionals
Nonrecurring
Individuals or households
200 Physicians, 100 Nurses and 100 Pharmacists
Health, 400 responses, $29,000 Federal cost, 100 hours, 1 form.
Richard Eisinger, 202-395-6880.
A major thrust of the National High Blood Pressure Education Program has been educational efforts directed at health professionals. The program expends considerable resources in mass media efforts and needs to determine to what extent health professionals are being reached. The primary application of survey results will be to guide in the planning and allocation of resources for dissemination of institute research findings and program messages.
• Food and Drug Administration
Bureau of Medical Devices Standards Survey
FDA 3196
Annually
Businesses or other institutions
Voluntary standards organizations, e.g., American National
SIC: 861
Consumer and Occupational Health and Safety, 37 responses, $35,000 Federal cost, 74 hours, 1 form.
Richard Eisinger, 202-395-6880.
The purpose of the Bureau of Medical Devices Standards Survey is to provide a comprehensive listing of current national and international standards promulgation activities in the field of medical devices.

Reinstatements

• National Institutes of Health
Medical Library Resource Improvement Grant Application

NIH-1887
On occasion
Businesses or other institutions
Medical libraries
SIC: 806 808 822 823
Health, 400 responses, $4,750 Federal cost, 2,400 hours, 0 form.
Richard Eisinger, 202-395-6880.
Application information needed to obtain data required by law and regulations in determining whether a grant may be made to a library which would fulfill the purpose of the legislation. Information provides the basis for peer review.

DEPARTMENT OF LABOR

Agency Clearance Officer—Paul E. Larson—202-523-6341.

New

• Departmental Management
SES candidate program application candidate evaluation form
Pers-3, Pers-4
On occasion
Individuals or households
SES candidates
Small businesses or organizations
Other labor services, 500 responses, $100 Federal cost, 1,250 hours, 2 forms.
Arnold Strasser, 202-395-6880
The forms permit the applicants to the DO1 SES candidates programs (both Federal employees and those outside the Federal Government) and their supervisor to relate experience or recommendation directly to selection criteria. The responses will permit executive resources boards to effectively rank applicants and make final selections to the programs.

• Bureau of Labor Statistics
Contract administration state contracts
Quarterly
State or local governments
State employment security agencies
SIC: 944
Other labor services, 540 responses, $3,000 Federal cost, 6,480 hours, 1 form.
Office of Federal Statistical Policy and Standard, 202-673-7974
Agency financial and operating reports regarding ongoing contract work are the primary source of information on the contractor's costs, performance and problems. They provide the Labor Department contracting officers with the information necessary to evaluate contract compliance.

• Bureau of Labor Statistics
BLS/OSHS Federal/State statistical grant (application form) standard 424
Annually
State or local governments
State agencies involved in safety and health statistics
SIC: 961
Small businesses or organizations
Other labor services, 48 responses, $100,000 Federal cost, 384 hours, 1 form.
Office of Federal Statistical Policy and Standard, 202-673-7974
Budget information is required for evaluating cost reasonability. The grant narrative indicates the scope and nature of the statistical activities covered by the grant to ensure conformance with objectives of grant program.

• Employment Standards Administration
OFCCP/No Community survey
AR-12
Annually
Businesses or other institutions
Employers and local civil rights/community organizations
SIC: 864 861
Small businesses or organizations
Other labor services, 100 responses, $250 Federal cost, 50 hours, 1 form.
Arnold Strasser, 202-395-6880
Report is a telephone survey utilized to assess Office of Federal Contract Compliance Programs contacts with minority, women's, handicap and veterans' organizations. The information is needed to evaluate program impact and effectiveness, and to improve services.

• Employment Standards Administration
Notice to carrier or self-insurer employer
LS-521
Annually
Businesses or other institutions
Insurance carriers or self-insured employers under LHWCA
SIC: Multiple
Small businesses or organizations
Income security, 5,000 responses, $10,500 Federal cost, 1,250 hours, 1 form.
Arnold Strasser, 202-395-6880
Notified insurance carrier or self-insurer of the requirement to increase Longshore and Habor Workers' Compensation Act benefits as required by Section 10(f). LHWC requires the carrier or self insurer to report on the implementation of the payment increase.

• Employment Standards Administration
Rehabilitation maintenance certificate
OWCP-17
Monthly
Businesses or other institutions
Injured workers and rehabilitation facility officials
SIC: 822 833
Small businesses or organizations
Income security, 9,000 responses, 900 hours, $11,000 Federal cost, 1 form.
Arnold Strasser, 202-395-6880
Utilized by injured workers and rehabilitation facilities to certify that rehab programs were carried out during a specified period. Necessary for determination of continued eligibility for payment of services under Section 8111(b) of the Federal Employees' Compensation Act and Section 8(g) of the Longshore and Harbor Workers' Compensation Act.

• Employment Standards Administration
Physician reports, evaluations and bills for services
CA-16, 17, 20, 20A, 28, 1090, 1302, 1303, 1304, 1306, 1308, 1316, 1331, 1333, OWCP-5
On occasion
Businesses or other institutions
Medical providers
Sic: All
Small businesses or organizations
Income security, 1,128,500 responses, 281,908 hours; $89,154 Federal cost, 15 forms
Arnold Strasser, 202-395-6880
Medical reports are required to support an injured Federal employee's claim for compensation benefits under 5 USC 8101 et seq. (Federal Employee's Compensation Act). OWCP-5 is utilized to determine medical status and continuing eligibility under both FECA and the Longshore and Harbor Workers' Compensation Act, as extended.

• Employment Standards Administration
Claims for compensation by dependents and dependent information reports
CA-5, 5B, 1031, 1074, 1085, 1615
On occasion
Individuals or households
Dependents of Federal employees, or their representatives
Income security, 9,125 responses, 5,375 hours; $21,082 Federal cost, 6 forms
Arnold Strasser, 202-395-6880
Reports are claims for compensation by dependent survivors due to the death of a Federal employee, and supplemental reports regarding dependent status. All are required for determination of eligibility for and/or the rate of compensation payments under the Federal Employees' Compensation Act (5 USC 8101 et seq.).

• Employment Standards Administration
Request for employment information
CA-1027
On occasion
Businesses or other institutions

Imployers of former Federal employees
Sic: All
Small businesses or organizations
Income security, 5,000 responses, 1,250 hours; $12,700 Federal cost, 1 form
Arnold Strasser, 202-395-6880
Report is used to collect information regarding an injured Federal employee's wage-earning capacity. Information is necessary for determination of continued eligibility for compensation payments under the Federal Employees' Compensation Act. (% USC 8101 et seq.).

• Employment Standards Administration
Request for medical reports
LS-158, 415, 525
On occasion
Businesses or other institutions
Medical providers
Sic: All
Small businesses or organizations
Income security, 2,520 responses, 1,260 hours; $10,500 Federal cost, 3 forms
Arnold Strasser, 202-395-6880
Medical reports are necessary to support an injured employee's claims for compensation benefits under Section 7 of the Longshore and Harbor Workers' Compensation Act (33 USC 901 et seq.) as amended and extended.

• Employment Standards Administration
Request for earnings information
LS-426
On occasion
Individuals or households
Recipients of longshore and harbor worker's compensation
Income security, 2,400 responses, 60 hours; $10,000 Federal cost, 1 form
Arnold Strasser, 202-395-6880
Report gathers information regarding injured employees' average weekly wage. This information is required for determination of compensation amounts in accordance with section 10, Longshore and Harbor Workers' Compensation Act.

• Employment Standards Administration
Physician information form
CM-1101
On occasion
Individuals or households
Recipients of black lung benefits who are living miners
General retirement and disability insurance, 18,000 responses, 1,500 hours; $12,500 Federal cost, 1 form
Arnold Strasser, 202-395-6880
Report is used to obtain information necessary to arrange for reimbursment of medical treatment expenses incurred by claimants under the Federal Coal Mine Safety and Health Act, as amended and 20 CFR 725.

• Employment Standards Administration
Certificate of medical necessity (CMN)
CM-893
Nonrecurring
Businesses or other institutions
Black lung medical providers (doctors)
Sic: All
Small businesses or organizations
General retirement and disability insurance, 5,000 responses, 1,667 hours; $25,500 Federal cost, 1 form
Arnold Strasser, 202-395-6880
This report is used to justify the need for prescribing equipment, therapy or services for black lung claimants. This form also expedites payment for the equipment, therapy and services and also is used to determine whether the equipment to be acquired should be purchased or leased.

DEPARTMENT OF TRANSPORTATION

Agency Clearance Officer—John Winsor, Acting—202-426-1887

New

• Federal Railroad Administration
Bad order and home shop card
Nonrecurring
Businesses or other institutions
Railroad transportation companies
Sic: 401
Ground transportation, 200,000 responses, 20,000 hours; $0 Federal cost, 1 form
Corrinne Hayward, 202-395-7340
49 CFR Part 215 requires carriers to attach card and keep record for ninety days of defective cars that are moved in trains for repairs. Inspectors will review records to determine if defective cars are being moved in trains for repair that could be repaired without movement in trains

VETERANS ADMINISTRATION

Agency Clearance Officer—R. C. Whitt—202-389-2146

Extensions (Burden Change)

• Statement of Disappearance
21-1775
On occasion
Individuals or households
Interested individuals
Income security for veterans, 2,000 responses; 5,500 hours, 1 form
Laverne V. Collins, 202-395-6880
This form is required to establish a claim for benefits based on the unexplained absence of any individual. Since no state law provide for presumption of death is applicable to claims for VA benefits, it is necessary that we gather sufficient information concerning the disappearance of the individual to properly make a decision. Authority is 38 U.S.C. 108

Reinstatements

• Application for accrued amounts of veterans benefits payable to widow, widower, child or dependent parents
21-614
On occasion
Individuals or households
Widow, widower, child or dependent parents
Income security for veterans, 0 responses, 4,000 hours, 1 form
Laverne V. Collins, 202-395-6880
This application is required to file a claim for any accrued benefits available at the time of the veteran's death if the dependent or parent has not filed a claim for death benefits with VA form 21-535. The information required is necessary to determine all persons who are eligible for payment of the accrued benefits, and to insure that the appropriate claimant or class of claimants are paid. Authority is 38 U.S.C. 3021

• Request to creditor regarding applicant's indebtedness
FL 26-250
On occasion
Individuals or households/businesses or other institutions
Creditors
Sic: 612, 614, 651, 653
Small businesses or organizations
Veterans housing, 32,000 responses, 5,333 hours; $81,091 Federal cost, 1 form
Laverne V. Collins, 202-395-6880
Credit information furnished by landlords and creditors on applicants for direct loans, release of liability, substitution of supplement, and purchasers of VA-acquired properties. Data used to ascertain credit worthiness pursuant to 38 U.S.C. 1810(B)(3) and 38 U.S.C. 1820

• Certificate as to securities
27-4709
On occasion
Individuals or households
Fiduciaries, legal custodians
Other veterans benefits and services, 36,000 responses, 9,000 hours; $54,409 Federal cost, 1 form
Laverne V. Collins, 202-395-6880
Legal guardians must account in court for all assets in the estate. The certificate of securities is acceptability in lieu of exhibiting the securities to the court and VA. 38 U.S.C. sec. 3202

ACTION

Agency Clearance Officer—Dana Rodgers, Acting—202-254-8501.

New

- University year for action demonstration evaluation

Nonrecurring
State or local governments/businesses or other institutions
UYA project coordination, UYA volunteers, community constituents
Sic: 832, 839
Social services, 222 responses, 148 hours; $57,979 Federal cost, 3 forms
Diane Wimberly, 202-395-6880
The data will be used by program staff, director of action and local project directors to identify and implement procedures associated with effective service-learning programs, and will assist action in assessing the impact of systematic changes implemented by demonstration projects. The data will affect planning and implementation of future service-learning programs funded by action in line with its priority to increase activity in this area

SMALL BUSINESS ADMINISTRATION

Agency Clearance Officer—John Anderson—202-653-6890

New

- Aquaculture interview, (b) fish processor interview, (c) fish distributor interview and (d) fish retailer interview

Nonrecurring
Businesses or other institutions
Fish and shellfish aquaculture producers
Sic: 027, 091, 209, 514, 542, 581
Small businesses or organizations
Other advancement and regulation of commerce, 250 responses, 125 hours; $150,000 Federal cost, 4 forms
Edward C. Springer, 202-395-4814
In support of the SBA and its role in the development of the national aquaculture plan. This study will provide data through interview techniques for identifying and prioritizing the marketing problems associated with the flow of aquaculture-derived fish products from the producer of such products through to the retail outlet

C. Louis Kincannon,

Deputy Assistant Director for Reports Management.

[FR Doc. 80-38443 Filed 12-10-80; 8:45 am]

BILLING CODE 3110-01-M

OFFICE OF THE UNITED STATES TRADE REPRESENTATIVE

[Docket No. 301-21]

Sample Eyeglass Frames With Gold Trim From Switzerland; Termination of Investigation

Pursuant to 15 CFR 2006.6, the U.S. Trade Representative hereby terminates the investigation under section 301 of the Trade Act of 1974, as amended (19 U.S.C. 2411), of a complaint that the customs treatment by the Government of Switzerland of sample eyeglass frames with gold trim was an unfair trade practice. The complaint was filed on December 6, 1979 by Universal Optical Company and a notice of the investigation, with a request for public comments, was published in the Federal Register of February 4, 1980 (45 FR 7654).

The complaint alleged that the mark indicating the gold content of the trim on sample eyeglass frames being imported into Switzerland had been removed by customs officials thereby damaging the items. Informal consultations were held with representatives of the Government of Switzerland and an investigation was conducted of the Swiss customs requirements for admission of items containing gold and the current U.S. marking and content requirements for gold items which allows a variance in the actual gold content of one-half of one carat from the marked amount. An amendment to U.S. law (Pub. L. 94-450, sec. 2; 94 Stat. 1501, effective October 1, 1981) will bring U.S. marking and content requirements more into conformity with international practice. On November 10, 1980, the legal representative for Universal Optical Company sent a letter to the Chairman of the Section 301 Committee withdrawing its petition.

Because of the request from the petitioner and the change in U.S. law, the Office of the United States Trade Representative, with the advice of the Section 301 Committee, hereby terminates the investigation of the complaint filed by Universal Optical Company (Docket No. 301-21), without prejudice to the petitioner.

Jeanne S. Archibald,

Chairman, Section 301 Committee.

[FR Doc. 80-38387 Filed 12-10-80; 8:45 am]

BILLING CODE 3190-01-M

SECURITIES AND EXCHANGE COMMISSION

[Rel. No. 11474; 811-1956]

The Colwyn Risk Fund, Inc.; Proposal To Terminate Registration Pursuant to Section 8(f) of the Investment Company Act of 1940

December 4, 1980.

Notice is hereby given that the Commission proposes, pursuant to Section 8(f) of the Investment Company Act of 1940 ("Act"), to declare by order on its own motion, that The Colwyn Risk Fund, Inc. ("Fund"), Russett Lane, Orchard Heights, Essex, Connecticut 06426, registered under the Act as a closed-end, non-diversified, management investment company, has ceased to be an investment company as defined in the Act.

Information contained in the files of Commission indicates that the Fund was organized under the laws of New Jersey on September 29, 1969, and registered under the Act on October 15, 1969, as a closed-end, non-diversified, management investment company. In addition, the Fund filed a registration statement (File No. 2-35027) pursuant to the Securities Act of 1933 in connection with a proposed public offering of shares of its capital stock. Although the 1933 Act registration statement was made effective on April 22, 1970, the Fund did not make a public offering of its securities. The Fund has never filed any of the periodic reports required by the Act. Finally, information in the Commission's files indicates that the Fund was abandoned, and that it has ceased to exist as a corporate entity and to profitably engage in any business. Thus, it appears that the Fund is not currently engaged in the business of an investment company.

Section 8(f) of the Act provides, in pertinent part, that whenever the Commission, on its own motion or upon application, finds that a registered investment company has ceased to be an investment company it shall so declare by order, which may be made upon appropriate conditions if necessary for the protection of investors, and upon the taking effect of such order the registration of such company shall cease to be in effect.

Notice is further given that any interested person may, not later than December 29, 1980, at 5:30 p.m., submit to the Commission in writing a request for a hearing on the matter accompanied by a statement as to the nature of his interest, the reasons for such request, and the issues, if any, of fact or law proposed to be controverted, or he may request that he be notified if the

Commission shall order a hearing thereon. Any such communication should be addressed: Secretary, Securities and Exchange Commission, Washington, D.C. 20549. A copy of such request shall be served personally or by mail upon the Fund at the address stated above. Proof of such service (by affidavit or, in the case of an attorney-at-law, by certificate) shall be filed contemporaneously with the request. As provided by Rule 0-5 of the Rules and Regulations promulgated under the Act, an order disposing of this matter will be issued as of course following said date unless the Commission thereafter orders a hearing upon request or upon the Commission's own motion. Persons who request a hearing, or advice as to whether a hearing is ordered, will receive any notices and orders issued in this matter, including the date of the hearing (if ordered) and any postponements thereof.

For the Commission, by the Division of Investment Management, pursuant to delegated authority.

George A. Fitzsimmons,

Secretary.

[FR Doc. 80-38349 Filed 12-10-80; 8:45 am]

BILLING CODE 8010-01-M

DEPARTMENT OF STATE

[Public Notice 732]

Participation of Private-Sector Representatives on U.S. Delegations

As announced in Public Notice No. 623 (43 FR 37783), August 24, 1978, the Department is submitting its November 1980 list of U.S. accredited Delegations which included private-sector representatives.

Publication of this list is required by Article IV(c)(4) of the guidelines published in the Federal Register on August 24, 1978.

Dated: December 3, 1980.

John W. Kimball,

Director, Office of International Conferences.

United States Delegation to the United Nations Cocoa Conference, United Nations Conference on Trade and Development (NCTAD), Geneva, October 27–November 14, 1980

Representative

The Honorable Michael B. Smith, Deputy U.S. Trade Representative, Geneva

Alternate Representative

Donald Phillips, Director of Commodity Policy, Office of the U.S. Trade Representative, Executive Office of the President

Advisers

John A. Barcas, Tropical Products Division, Bureau of Economic and Business Affairs, Department of State

Donald Crafts, Office of Raw Materials, Department of the Treasury

Ralph Ives, Office of Commodity Policy, Department of Commerce

Frederick L. McEldowney, Office of the Deputy U.S. Trade Representative, Geneva

Private Sector Advisers

Travers J. Bell, (November 3–7), Chairman of the Board Cocoline Chocolate Company Brooklyn, New York

Harold J. Gettinger (October 27–31), Vice President, Commercial, M&M/Mars, Inc., Hackettstown, New Jersey

Joanna Moss, Economist, Public Interest Economics Foundation, San Francisco, California

Robert W. Paulson (October 27–31), Vice President, Westway Merkuria, Inc., New York, New York

Johann J. Scheu (November 10–14), President, Cocoa Merchants Association, New York, New York

William J. Shaughnessy (November 3–7), Manager, Commodity Analysis, Hershey Foods, Hershey, Pennsylvania

Daniel Tulig (November 3–7), Vice President, Internacio, Inc., New York, New York

United States Delegation to the Meeting of Group B of the Preparatory Intergovernmental Committee for the Revision of the Paris Convention, World Intellectual Property Organization (WIPO), Paris, November 3–6, 1980

Representative

Sidney A. Diamond, Commissioner of Patents and Trademarks, U.S. Patent and Trademark Office, Department of Commerce

Alternate Representative

Michael K. Kirk, Director, Office of Legislation and International Affairs, U.S. Patent and Trademark Office, Department of Commerce

Advisers

Lee J. Schroeder, Office of Legislation and International Affairs, U.S. Patent and Trademark Office, Department of Commerce

Harvey J. Winter, Director, Office of Business Practices, Department of State

Private Sector Advisers

George R. Clark, Vice President, Sunbeam Corporation

William L. Keefauver, General Counsel, Bell Laboratories

United States Delegation to the Ninth Meeting of the Visual Aids Panel of the International Civil Aviation Organization (ICAO), Montreal, November 3 to 21, 1980

Member

Robert Bates, Office of Airport Standards, Federal Aviation Administration, Department of Transportation

Advisers

Bret Castle, Airport Technology Division, Federal Aviation Administration, Department of Transportation

Gerald E. Gibson, Air Transportation Division, Federal Aviation Administration, Department of Transportation

Private Sector Advisers

Edwin W. Abbott, Manager, Operational Facility Requirements, Air Transport Association

James A. Forgas, Flight Operations Specialist, Air Line Pilots Association

United States Delegation to the Annual Meeting of the North Pacific Fisheries Convention (INPFC), Anchorage, Alaska, November 4–7, 1980

Commissioners

The Honorable Elmer Rasmuson, United States Commissioner, Chairman, U.S. Section

The Honorable Dayton L. Alverson, United States Commissioner

The Honorable Robert McVey, United States Commissioner

The Honorable Robert R. Thorstenson, United States Commissioner

Advisers

Christine Dawson, Fisheries Affairs Officer, Office of Fisheries Affairs, Department of State

Prudence Fox, Foreign Affairs Officer, Office of International Fisheries, National Oceanic and Atmospheric Administration, Department of Commerce

George A. Furness, Deputy Director for Conference Programs, Office of International Conferences, Bureau of International Organization Affairs, Department of State

Gordon Jensen, Chairman, Alaska Board of Fisheries, Petersburg, Alaska

Herman McDevitt, Pacific Regional Fishery, Management Council, Pocatello, Idaho

Charles Meacham, Sr., Director, Office of the Governor, Office of International Fisheries and External Affairs, Juneau, Alaska

Clement Tillon, State Senator, Alaska State Senate, Juneau, Alaska

Private Sector Advisers

Alvin R. Burch, Commercial Fisherman, Kodiak, Alaska

John Hansen, Commercial Fisherman, Alakanuk, Alaska

Harold Lokken, Fishing Vessel Owners Association, Seattle, Washington

United States Delegation to the Annual Meeting of the International Commission for the Conservation of Atlantic Tuna (ICCAT), Madrid, November 5–18, 1980

Commissioner

The Honorable Carman J. Blondin (Head of Delegation), United States Commissioner, Director for International Fisheries Affairs, National Marine Fisheries Service, National Oceanic and Atmospheric Administration, Department of Commerce

Alternate Commissioner

August Felando, American Tuna Boat Association, San Diego, California

Advisers

Brian S. Hallman, Bureau of Oceans and International Environmental and Scientific Affairs, Department of State

Michael Parrack, National Marine Fisheries Service, National Oceanic and Atmospheric Administration, Department of Commerce

Barbara Rothschild, National Marine Fisheries Service, National Oceanic and

Atmospheric Administration, Department of Commerce
Gary T. Sakagawa, National Marine Fisheries Service, National Oceanic and Atmospheric Administration, Department of Commerce
Richard Stone, National Marine Fisheries Service, National Oceanic and Atmospheric Administration, Department of Commerce

Private Sector Advisers
Gordon C. Broadhead, Living Marine Resources, San Diego, California
Eugene Fidell, Attorney at Law, Washington, D.C.
George Sousa, American Tuna Boat Association, San Diego, California

United States Delegation to the Seventh Plenary Assembly of the International Telegraph and Telephone Consultative Committee (CCITT), Geneva, November 10–21, 1980

Representative
Richard H. Howarth, Office of International Communications Policy, Department of State

Alternate Representative
Thijs de Haas, National Telecommunications and Information Administration, Department of Commerce

Advisers
Veronica Ahern, Office of International Affairs, National Telecommunications and Information Administration, Department of Commerce
Dexter Anderson, Telecommunications Attaché, United States Mission, Geneva
Earl Barbely, International Common Carrier Bureau, Federal Communications Commission

Private Sector Advisers
B. Richard Climie, Aeronautical Radio, Inc., Annapolis, Maryland
Joseph S. DeBlasi, IBM Corporation, Armonk, New York
Joseph Grumblatt, General Telephone and Electronics, Inc., Stamford, Connecticut
John Klotsche, RCA Global Communications, Inc., New York, New York
Henry L. Marchese, American Telephone and Telegraph Company, Basking Ridge, New Jersey
John O'Boyle, ITT World Communications, Inc., New York, New York
Philip C. Onstad, Control Data Corporation, Greenwich, Connecticut
Donald F. Sabacek, TRT Telcommunications Corporation, Washington, D.C.
Phillip H. Sach, Western Union International, Inc., New York, New York
Allan Schwamberger, Western Union Telegraph Company, New York, New York

United States Delegation to the Meetings of Joint Ad Hoac Working Group of the Committee on Capital Movements and Invisible Transactions-Insurance Committee and the Insurance Committee Organization for Economic Cooperation and Development (OECD), Paris, November 12–14, 1980

Representative
Albert N. Alexander, Director, International Services Division, Department of Commerce

Alternate Representative
Stephen Altheim, U.S. Mission to the OECD, Paris

Private Sector Advisers
Franklin W. Nutter, General Counsel, Reinsurance Association of America, Washington, D.C.
Ronald K. Shelp, Vice President, American International Underwriters Corporation, New York, New York

United States Delegation to the Sixth Session of the Administrative and Legal Committee of the International Union for the Protection of New Varieties of Plants (UPOV), Geneva, November 13–14, 1980

Observer
Stanley D. Schlosser, Office of Legislation and International Affairs, U.S. Patent and Trademark Office, Department of Commerce

Private Sector Adviser
Leo Donahue, Administrator, National Association of Plant Patent Owners, Washington, D.C.

United States Delegation to the International Sugar Organization, Council Meeting Commodities, London, November, 13–19, 1980

Representative
Rollinde Prager, Office of the United States Trade Representative, Executive Office of the President

Alternate Representative
Paul P. Pilkauskas, American Embassy, London

Advisers
Mark Lore, Commodity Policy Division, Bureau of Economic and Business Affairs, Department of State
Frank Padavano, Deputy Director, Horticultural and Tropical Products Division, Department of Agriculture

Private Sector Advisers
David Carter, President, U.S. Beet Sugar Association, Washington, D.C.
Horace Godfrey, Vice President, Florida Sugar Cane League, Washington, D.C.
Harold G. Jenkins, Director, Raw Materials/Equipment Division, Nabisco, Inc., East Hanover, New Jersey
Nicholas Kominus, President, U.S. Cane Sugar Refiner's Association, Washington, D.C.
Eiler C. Ravnholt, Vice President, Hawaiian Sugar Planters' Association, Washington, D.C.
Lee Richardson, Consumer Federation of America, Washington, D.C.

United States Delegation to the Forty-Fourth Session of the Legal Committee, Intergovernmental Maritime Consultative Organization (IMCO), London, November 17–21, 1980

Representative
Steven J. Delaney, Lt. Commander, USCG, Office of the Chief Counsel, United States Coast Guard, Department of Transportation

Alternate Representative
Paul E. Versaw, Commander, USCG, Chief, Maritime and International Law Division, United States Coast Guard, Department of Transportation

Advisers
Frederick R. Adamchak, Lt. Commander, USCG, Hazardous Materials Division, Office of Merchant Marine Safety, United States Coast Guard, Department of Transportation
Peter Bernhardt, Office of Oceans and Polar Affairs, Bureau of Oceans and International Environmental and Scientific Affairs, Department of State
John F. Simmons, Jr., Shipping Attaché, American Embassy, London

Private Sector Adviser
Ernest J. Corrado, Chief Counsel, American Institute of Merchant Shipping, Washington, D.C.

United States Delegation to the Eighth Inter-American Indian Congress, Organization of American States (OAS), Merida, Mexico, November 17–21, 1980

Representative
M. Franklin Keel, Department of the Interior, Member, Choctaw and Chicksaw Tribes

Alternate Representatives
James Davis, American Embassy, Mexico
Kenneth W. Plummer (Secretary of Delegation), Office of International Conferences, Bureau of International Organization Affairs, Department of State

Public Sector Advisers
Ned Anderson, Chairman, San Carlos Tribal Council, San Carlos, Arizona, Member, San Carlos Apache Tribe
Suzan Shown Harjo, Legislative Liaison, Native American Rights Fund, Washington, D.C. Member, Cheyenne and Arapaho Tribes
Robert Lang, President, Alaska Native Foundation, Anchorage, Alaska, Member, Tshimshian and Tlingit Tribes
Frank Lawrence, Chairman, Standing Rock Sioux Tribal Council, Fort Yates, North Dakota, Member, Standing Rock Sioux Tribe
Grace McCullah, Executive Director, Indian Development, Phoenix, Arizona, Member, Navajo Tribe
Abbott Sekaquaptewa, Chairman, Hopi Tribal Council, Oraibi, Arizona, Member, Hopi Tribe
Reuben Snake, Chairman, Winnebago Tribal Council, Winnebago, Alaska, Member, Winnebago Tribe
Birgil Kills Straight, President, Coalition of Indian Controlled School Boards, Kyle, South Dakota, Member, Oglala Sioux Tribe
Nancy Tuthill, Director, American Indian Law Center, University of New Mexico, Member, Quapaw Tribe
Anthony Washines, Yakima Tribal Council, Spokane, Washington, Member, Yakima Tribe

United States Delegation to the Codex Alimentarius Committee on Food Hygiene, Food and Agriculture Organization/World Health Organization (FAO/WHO), Washington, D.C., November 17–21, 1980

Representative

George J. Jackson, Division of Microbiology, Food and Drug Administration

Alternate Representative

Robert W. Weik, Acting Assistant Director for International Standards, Bureau of Foods, Food and Drug Administration

Advisers

E. Spencer Garrett, National Fishery Products, Director, Inspection and Safety Laboratory, National Marine Fisheries Service, Pascagoula, Mississippi

George P. Hoskin, Division of Microbiology, Food and Drug Administration

John E. Kvenberg, Division of Microbiology, Food and Drug Administration

Joseph W. Lepak, Assistant to the Director, Division of Microbiology, Food and Drug Administration

Joseph M. Madden, Division of Microbiology, Food and Drug Administration

Thomas Mulvaney, Chief, Processing Section, Division of Food Technology, Food and Drug Administration

Private Sector Advisers

Lowrie M. Beacham, Adviser to the President, National Food Processors Association, Washington, D.C.

Nino F. Insalata, Senior Laboratory Manager, Microbiological Research, General Foods Corporation, White Plains, New York

United States Delegation to the Ad Hoc Group on Urban Problems, Organization for Economic Cooperation and Development (OECD), Paris, November 20–21, 1980

Representative

Feather O'Connor, Acting Deputy Assistant Secretary for Policy Development, Department of Housing and Urban Development

Advisers

David Kunhardt, Office of International Affairs, Department of Housing and Urban Development

Robert G. Morris, U.S. Mission to the OECD, Paris

John P. Ross, Division of Economic Development and Public Finance, Department of Housing and Urban Development

Private Sector Adviser

Jonathan Howes, Professor, Center for Urban and Regional Studies, University of North Carolina, Chapel Hill, North Carolina

United States Delegation to the Joint Meetings of the Working Group on Planning and Working Group on Tariffs of the Inter-American Telecommunications Conference (CITEL), Organization of American States (OAS), Lima, November 24–28, 1980

Working Group on Planning

Representative

Frank R. Netro, Office of Science and Technology, Federal Communications Commission

Working Group On Tariffs

Representative

Randolph L. Smith, Common Carrier Bureau, Federal Communications Commission

Private Sector Adviser

Richard Szigeti, Manager, Rates and Tariffs, FTCC, Inc., New York, New York

United States Delegation to the International Cotton Advisory Committee (ICAC), Thirty-Ninth Plenary, Manila, November 24–29, 1980

Representative

The Honorable P. R. "Bobby" Smith, Assistant Secretary of Agriculture for Marketing and Transportation Services, Department of Agriculture

Alternate Representatives

John A. Barcas, Chief, Tropical Products Division, Bureau of Economic and Business Affairs, Department of State

Gordon H. Lloyd, Deputy Director for Analysis, Tobacco, Cotton, and Seeds Division, Foreign Agricultural Service, Department of Agriculture

Advisers

Charles V. Cunningham, Chief, Program Analysis Branch, Agriculture Conservation and Stabilization Service, Department of Agriculture

Leonard A. Mobley, Director, Trade and Analysis Division, Office of Textiles, Department of Commerce

Glenn Sampson, Foreign Agricultural Service, Department of Agriculture

Private Sector Advisers

Raymond V. Cooper, Starkey, Taylor and Sons Cotton Company, Dallas, Texas

J. William Donaghy, President, New York Cotton Exchange, New York, New York

David C. Hull, Cotton Council International, Washington, D.C.

Earl Billing, Executive Director, American Cotton Shippers Association, Dallas, Texas

Dan Miller, Producers Steering Committee, National Cotton Council of America, Lamesa, Texas

G. L. Seitz, Chairman, AMCOT, Bakersfield, California

[FR Doc. 80-38462 Filed 12-10-80; 8:45 am]

BILLING CODE 4710-19-M

[Public Notice CM-8/351]

Study Group 5 of the U.S. Organization for the International Radio Consultative Committee (CCIR); Meeting

The Department of State announces that Study Group 5 of the U.S. Organization for the International Radio Consultative Committee (CCIR) will meet on January 15, 1981 from 1:00 to 5:00 p.m. in Room CR-46, Engineering Center, University of Colorado, Boulder, Colorado.

Study Group 5 deals with propagation of radio waves (including radio noise) at the surface of the earth, through the non-ionized regions of the earth's atmosphere, and in space where the effect of ionization is negligible. The purpose of the meeting will be a review of the work program in preparation for the international meeting of Study Group 5 in August–September 1981.

Members of the general public may attend the meeting and join in the discussions subject to instructions of the Chairman. Admittance of public members will be limited to the seating available.

Requests for further information should be directed to Mr. Gordon Huffcutt, State Department, Washington, D.C. 20520, telephone (202) 632-2592.

Dated: December 3, 1980.

Gordon L. Huffcutt,

Chairman, U.S. CCIR National Organization.

[FR Doc. 80-38347 Filed 12-10-80; 8:45 am]

BILLING CODE 4710-07-M

[Public Notice CM-8/352]

Study Group 6 of the U.S. Organization for the International Radio Consultative Committee (CCIR); Meeting

The Department of State announces that Study Group 6 of the U.S. Organization for the International Radio Consultative Committee (CCIR) will meet January 16, 1981, at Boulder, Colorado. The meeting will open at 9:00 a.m. in Room 3012 of the Department of Commerce Boulder Laboratories Building, 325 Broadway.

Study Group 6 deals with matters relating to the propagation of radio waves by and through the ionosphere. The purpose of the meeting will be to review the work of U.S. Study Group 6 in preparation for the international meeting of Study Group 6 scheduled for the Fall, 1981.

Members of the general public may attend the meeting and join in the discussions subject to instructions of the Chairman. Admittance of public members will be limited to the seating available.

Requests for further information should be directed to Mr. Gordon Huffcutt, State Department, Washington, D.C. 20520, telephone (202) 632-2592.

Dated: December 3, 1980.

Gordon L. Huffcutt,

Chairman, U.S. CCIR National Committee.

[FR Doc. 80-38348 Filed 12-10-80; 8:45 am]

BILLING CODE 4710-07-M

DEPARTMENT OF TRANSPORTATION

Federal Aviation Administration

Flight Service Station (FSS) Modernization Plan

AGENCY: Federal Aviation Administration (FAA), DOT.

ACTION: Resolution of public review; identification of 61 proposed FSS locations.

SUMMARY: The FSS Modernization Plan will establish a configuration of 61 automated FSSs in the conterminous United States, Alaska, Hawaii, and Puerto Rico. A proposal for this program was issued for public review April 17 through August 15. This announcement contains the resolution of the comments and recommendations received during the public review and identifies the 61 proposed FSS locations.

EFFECTIVE DATE: November 13, 1980.

FOR FURTHER INFORMATION CONTACT: Mr. Paul K. Rosenwald, AAT-105, FSS and Leased Services Communications Requirements Branch, Federal Aviation Administration, 800 Independence Avenue, S.W., Washington, D.C. 20591, Telephone 202/426-8466.

SUPPLEMENTARY INFORMATION: A copy of the public comments and the FAA response and the list of the 61 proposed FSS locations may be obtained from the Office of Public Affairs, APA-430, FAA Headquarters.

Issued in Washington, DC., on December 3, 1980.

R. J. Van Vuren,
Director, Air traffic Service.

1.0 Public Review of FSS Modernization Plan

1.1 Public Participation. A public review of the proposed FSS Modernization Plan was conducted April 17 through August 15. The review offered the aviation community and other interested persons, the opportunity to participate in the development of this program. The FAA appreciates the thoughtful and meaningful contributions, and interest expressed by those taking the time to comment on the proposed plan.

1.2 Discussion of Comments. In response to the announcement of the FSS Modernization proposal, the FAA received 25 formal statements from individuals, pilots and owners of aircraft, aviation trade and industry associations, and Federal, state, and city government agencies and representatives.

For this discussion, the major issues contained in the subject correspondence were grouped into six categories. The categories and the FAA response are as follows.

1.2.1 Program Concepts. a. Phased Implementation.—In their comments on the concepts of the proposed program, four respondents expressed the need for a sequential, or phased implementation, so that pilots can be assured of the new system's capabilities prior to the consolidation of existing FSSs.

Response—Phased implementation was a precept in the development of the plan. The plan specifies distinct phases for implementation of automation, construction of FSSs, demonstration of system capability, and development of a consolidation plan by FAA managers of the facilities involved and the local aviation community. Consolidation of individual existing FSSs will not be initiated until the preceding steps have been completed.

b. Collocation.—Two respondents questioned the requirement to locate FSSs on airports as opposed to collocation at the air route traffic control centers (ARTCCs).

Response—The basic concepts of the plan; i.e., automation, centralization, and direct user access, eliminate physical FSS location as a governing factor for system operation. Also, there are no significant cost or operational advantages to be gained thru collocation with ARTCCs. This was verified at the Leesburg, Virginia, prototype FSS where tests were conducted on collocation and consolidation.

On the other hand, there are tangible advantages to locating FSSs at general aviation airports. The physical location of the specialist's place of business (the FSS) on an airport, promotes a direct identification with aviation and a resultant sense of urgency to assigned tasks. This is in addition to a personal realization as to the need for service. This identification promotes the perception of the pilot as a user, rather than a mere data request or transaction in an isolated automation environment.

The presence of an FSS on the airport also establishes a point of relatively convenient accessibility to the system for the general aviation user. While the physical location is not intended to facilitate or emphasize direct pilot briefing at the FSS, the availability of a local point of personal contact will promote a feeling or user security with the automated system. It must be recognized that while the majority of pilots will use direct access to the computer or remote telephone access to the specialist, there will be an inherent resistance to change. The system must overcome this challenge to assure transition to automation for the benefit of all concerned.

Consequently, FAA has made a conscientious decision to establish the new FSS facilities at general aviation airports with significant general aviation activity.

c. Part-timing.—Two respondents submitted the position that part-timing of FSSs was a "contradiction" of FAA's assurance that the level of service would not be degraded.

Response.—Contrary to the stated position, part-timing of selected FSSs is a positive action. It allows the FAA to use existing resources more effectively and to maintain the current level of service, despite an increase in the demand for those services.

The plan identifies part-timing and personnel increases as interim solutions to staffing shortages during the transition. Part-timing is preferred, since it would preclude the hiring of personnel who would become surplus as the benefits of the planned system materialize in the 1984-85 time frame.

d. Nonconterminous Locations.—One respondent inquired as to the reasons for including nonconterminous locations in the plan, and whether the three FSSs proposed for Alaska were sufficient.

Response—The FSSs in Alaska as well as Hawaii and Puerto Rico are an integral part of the system. They are faced with problems similar to those confronting domestic FSSs. Since this plan is for modernization of the total FSS system, the nonconterminous locations were included.

The number of automated FSSs established in Alaska will be commensurate with the service demand. More important, however, is the number of outlets providing contact with the specialist, and eventually, direct access to the computer. The number of outlets will not change significantly in the initial stages, but should increase as direct user access becomes available.

e. Cost Effectiveness.—One of the responding organizations questioned the impact of the increase in leased communications cost that will be incurred through implementation of the plan.

Response—Detailed cost analyses have been prepared. The increased cost of leased communications services will be balanced by cost avoidance of the additional manpower required if today's system were expanded to meet projected demand.

f. Impact of Direct Access on Safety.—One organization inquired about the impact on aviation safety brought about through use of direct access by less experienced pilots.

Response—The question is vaild, however, the FAA is presently faced with a problem of equal significance; wherein pilots often conduct flights without a briefing because they cannot contact an FSS specialist. The proposed modernization plan provides a balanced attack on both issues. Automation and direct access will allow the new system to satisfy many of the routine requirements of the experienced pilot.

Conversely, the specialists who formerly would have provided those services will now be more readily available to the user with the greater need—the inexperienced pilot.

g. Continued FAA Support.—One responding organization requested a commitment of continued FAA support of the plan.

Response—The FAA has made a commitment to the planned FSS Modernization Program. The record speaks for itself regarding major funding and FAA support for the current program since the inception of FSS automation in 1975. This commitment, combined with concurrent support of major industry representatives, will preclude many of the pitfalls that defeated previous attempts to improve the FSS system.

h. FSS Building Requirements.—One responding organization questioned the need for 59 buildings, and whether construction cost estimates were sufficient to cover all requirements.

Response—A thorough analysis of FSS distribution and space requirements indicated 61 facilities were required to satisfy the forecast demand. The analysis further indicated only two existing FSSs could satisfactorily accommodate both automation and consolidation. Consequently, 59 buildings are required.

The analysis of building requirements considered all aspects including FSS security and backup power. The construction funding identified in the FSS Modernization Plan is adequate.

1.2.2 Program Coordination. Four respondents requested FAA announce the locations for the new FSSs. One responding organization requested advance notification in the event of part-timing or closure. One additional respondent requested a single agency contact for the FSS Modernization program.

Response—The 61 proposed FSS locations are listed in Section 2.0.

The FAA has an established procedure for public notification when a change in the hours of FSS operation is planned. This includes a public announcement of intent and coordination with the Congress. The subject FSS plan emphasizes and provides for participation at the aviation community level when and FSS is to be consolidated into one of the automated facilities

The FAA has established a point of contact for the FSS Modernization Plan. The contact is:

Mr. Paul K. Rosenwald, FSS and Leased Services Communications Requirements Branch, AAT-140, Federal Aviation Administration, 800 Independence Avenue SW., Washington, D.C. 20591. Telephone: 202/426-8466

1.2.3. System Accessibility. a. Accessibility.—Two responding organizations requested assurance that pilots would have adequate access to the system. A third requested national toll-free telephone access to the system.

Response—This plan that the modernized FSS system will satisfy the 1995 projected two-fold increase in activity without a commensurate increase in personnel. This would be accomplished via automation, centralization of services, and direct user access. This combination would drastically alter today's system in that:

1. Labor intensive data handling functions currently performed by the specialist would be eliminated.

2. Specialist support of telephone preflight services would be significantly reduced.

3. Specialist functions for mass dissemination services; i.e., Transcribed Weather Broadcast and Pilot Automatic Telephone Weather Answering Service, would be automate.

4. Congestion on air/ground frequencies induced by preflight related services would be reduced, as would the specialists support of those services.

Consequently, the majority of the 5,000 specialists presently authorized for the FSS system would be involved in providing primary (preflight, inflight, and attributed to the introduction of automation and the centralization of services, have been validated in prototype facilities at Atlanta, Georgia; Indianapolis, Indiana; and Leesburg, Virginia. The benefits assumed through implementation of direct user access have been verified in numerous field experiments using self-briefing terminals, and the Voice Response System tests in Columbus, Ohio, and Washington, D.C.

In the matter of toll-free telephone access, the FAA is implementing state and area-wide toll-free service to selected existing FSSs. This concept will be maintained as the new system of automated FSSs is implemented.

b. Connectivity.—One responding organization indicated FAA should provide direct access, or a suitable alternative, to the weather system and the air route traffic control center (ARTCC) computers.

Response—Neither the Weather Message Switching Center at Kansas City, Missouri, nor the ARTCC computers were designed for pilot direct access. Conversely, the Model 2 and Model 3 Flight Service Automation Systems (FSASs) will provide the necessary external connections for user access to the desired systems.

As currently planned, the Model 2 system will provide for and external dedicated or dial-up telephone connection. Pilots may use privately-owned or leased communications terminals to enter a request to the FSS computer and receive automatically terminals to enter a request to the FSS computer and receive automatically processed weather information. They may also enter flight movement information which will be automatically processed and forwarded to the appropriate air traffic control facility.

The Model 3 system will introduce further enhancements such as the computer generated voice response system (VRS). The VRS will accommodate push-button telephone entry of weather requests, and may ultimately accept similar entry of flight movement data. The VRS will also automatically generate the recorded messages for mass weather dissemination devices that will be available to pilots via direct access.

c. Monitoring.—One respondent stipulated the FAA should provide for status monitoring of all remote systems.

Response—The status monitoring provided in existing equipment (VORTACs, ILSs, etc.) is consistent with the requirements of the National Airspace System (NAS). Similarly, the development of replacement, as well as new equipment will be based on established operational requirements, which may include remote status monitoring. All equipment introduced into the NAS is subject to high standards in keeping with FAA's responsibility for a safe, efficient air transportation system.

1.2.4 System Support. a. Program Office Requirements.—One respondent spoke out against a major program office for FSS automation.

Response—Flight service station modernization is one of FAA's major programs, but will not require a large independent program office. The FAA has elected to use the matrix management concept for FSS modernization. This requires a Program Manager, supported by Associate Program Managers located within the existing organizational structure. The location of the Program Manager within FAA will depend on the phase of the program, but each phase will still be accomplished within the standard organizational structure.

b. Training.—One organization was very concerned with the timely training of the additional staff required for automation.

Response—The FAA has initiated planning to provide adequate and timely training of personnel responsible for support of FSS automation. Requirements for hardware technician and software specialist training programs have been identified. This includes both initial and recurring training. Similar requirements have also been developed for the training of FSS operational personnel. All personnel will receive training commensurate with their responsibilities.

c. Reliability.—Five of the respondents cited the requirement for reliability of equipment, including remote weather, telephone and air/ground communications systems, under extreme weather conditions.

Response—The FAA has a vital interest in the reliability of all systems operated and maintained within the National Airspace System regardless of location. The operational requirements for these equipments dictate that it operate at prescribed levels in tropical, as well as arctic weather conditions. The FAA is presently involved in independent, as well as joint, government development programs to provide the systems required to support the FSS Modernization Plan.

Additionally, the FAA and individual telephone companies participate in continuing joint efforts, to improve leased communications line and switching system availability. The FAA shall maintain this effort as new systems are introduced.

1.2.5 System Capability. a. Existing Services.—Five respondents stressed the need to continue existing air/ground communications and emergency assistance service, as well as mass weather dissemination and weather observations.

Response—The FSS Modernization Plan provides for continued operation and maintenance of the FSS air/ground communications capability as well as mass weather dissemination services. Pilots will continue to receive the same level of quality in routine and emergency assistance services they enjoy today. The only difference being, the service will be provided from a different location.

Mass weather dissemination techniques have been a reliable means of satisfying a portion of pilot preflight planning needs. The planned FSS system will provide air/ground access, as well as ground/ground telephone access to transcribed recordings. These prerecorded messages will ultimately be prepared automatically by the computer generated voice response system.

Weather observations will continue at those locations where the service is presently provided by the FSS. The service may be made available from other government offices (FAA towers or the National Weather Service) from private citizens on a contractual basis, or by automated observation systems.

b. Near-Term Improvements.—Three responding organizations also addressed the need to maintain and enhance existing FSSs until the modernized system is in place.

Response—In keeping with its responsibilities, FAA has introduced a number of interim enhancements to the existing FSS system. This is typified by the recently implemented Leased Service A System which provided for enhanced data transmission and local electronic storage of weather and aeronautical information at 150 of the busiest FSSs. The FAA will continue its efforts to meet the existing service demand while minimizing expenditures.

c. Non-FSS Responsibilities.—One respondent requested that FAA continue to operate airport lighting facilities when an FSS is closed.

Response—Operation of airport lighting systems is not an FAA responsibility. This service has been provided by the FSS at selected locations as a convenience to the airport operators since the FSS is typically the only 24-hour facility at those airports. There are a number of alternatives including airport management control or activation by the pilot using air/ground communications channels. This matter will be resolved on a case-by-case basis with the airport authority.

1.2.6 Public Recommendations for FSS Locations. Ten respondents submitted recommendations for FSS locations at nine different airports.

Response—All recommendations regarding candidate locations for the new FSSs were forwarded to the FSS Review Group. These and all other airports in the National Airspace System were given equal consideration as sites for the new FSSs. The nine locations are:

Long Beach Airport, Long Beach, CA
John Wayne Airport, Orange County, CA
Van Nuys Airport, Van Nuys, CA
Anniston Airport, Anniston, AL
Augusta State Airport, Augusta, ME
Eastern Regional Jetport, Kinston, NC
Jamestown Municipal Airport, Jamestown, ND
Greenville-Spartanburg Airport, Greer, SC
Nashville Metropolitan Airport, TN

2.0 Proposed FSS Configuration

2.1 FSS Selection Criteria. The proposed FSS Modernization Plan included five criteria to be used in the selection of new FSS locations. None of the respondents took issue with the criteria as proposed. The five criteria are:

—Emphasize general aviation activity, in terms of airport operations and based aircraft;

—Emphasize the approved Satellite Airport Program;

—Emphasize geographical distribution of FSSs in terms of concentration of activity and homogenity of terrain and weather;

—Emphasize distribution of workload; and

—Utilize existing facilities and locations to extent practical.

2.2 FSS Locations. The FAA has selected the locations for 14 of the 61 FSSs in the modernized system and identified tentatively the other 47 sites. When to the Selection Criteria listed in 2.1, 30 of the proposed sites are ranking state general aviation airports; 27 are candidates in the Satellite Airport Program; 43 are existing FSS airports, and only 5 states are not represented. Two existing FSSs, Cleveland, Ohio, and Denver, Colorado, will be retained, therefore, 59 new buildings are required.

The total system of 61 automated FSSs should be operational by FY-1989. Fourteen FSSs have been included in the initial phase of the agency's Program Plan and are scheduled to be commissioned by FY-1985. These locations, listed alphabetically by state are:

Denver, CO (Araphoe)
Miami, FL (New Tamiami)
Atlanta, GA (Fulton County)
Indianapolis, IN (International)
Bedford, MA (Hanscom Field)
Las Vegas, NV (North Las Vegas Air Terminal)
Islip, NY (MacArthur)
Cleveland, OH (Hopkins)
Columbus, OH (Ohio State University)
Pittsburgh, PA (Allegheny County)
Nashville, TN (Metropolitan)
Houston, TX (Hobby)
Manassas, VA (Municipal)
Milwaukee, WI (Timmerman)

A commissioning schedule for the remaining 47 locations will be developed later. The 47 proposed locations are:

Birmingham, AL (Municipal)
Anchorage, AK (Merrill)
Fairbanks, AK (International)
Juneau, AK (International)
Mesa, AZ (Falcon Field)
Little Rock, AR (Adams Field)
Concord, CA (Buchanan Field)
Long Beach, CA (Daugherty Field)
Riverside, CA (Municipal)
Sacramento, CA (Executive)
San Diego, CA (Montgomery)

Orlando, FL (Herndon Field)
Tallahassee, FL (Municipal)
Honolulu, HI (Island of Oahu)
Bosie, ID (Gowen)
Chicago, IL (Dupage County)
Des Moines, IA (Municipal)
Wichita, KS (Mid-Continent)
Louisville, KY (Bowman Field)
New Orleans, LA (Lakefront)
Augusta, ME (State)
Pontiac, MI (Municipal)
Minneapolis, MN (Flying Cloud)
Jackson, MS (Hawkins)
St. Louis, MO (Spirit of St. Louis)
Kansas City, MO (Municipal)
Billings, MT (Logan)
Omaha, NE (Eppley Field)
Teterboro, NJ (Municipal)
Albuquerque, NM (International)
Buffalo, NY (International)
Greensboro, NC (Regional)
Grand Forks, ND (International)
Oklahoma City, OK (Wiley Post)
Portland, OR (Hillsboro)
Philadelphia, PA (North Philadelphia)
San Juan, PR (Isla Verde)
Greenville, SC (Downtown)
Sioux Falls, SD (Joe Foss Field)
Memphis, TN (International)
Fort Worth, TX (Meacham Field)
San Antonio, TX (International)
Salt Lake City, UT (International)
Burlington, VT (International)
Seattle, WA (Boeing)
Charlestown, WV (Kanawha)
Casper, WY (Natrona)

Appendix 1

List of Respondents

Senator Quentin N. Burdick, North Dakota
Senator William S. Cohen, Maine
Congressman Bill Boner, Tennessee
Congressman Bill Nichols, Alabama
Congresswoman Olympia J. Snowe, Maine
Congressman Tom Tauke, Iowa
Congressman Don Young, Alaska
National Association of Air Traffic Specialists
State of Maine Department of Transportation
State of Michigan Department of Transportation Aeronautics Commission
State of New York Department of Transportation
City of Redwood Falls, Minnesota
Greenville-Spartanburg, South Carolina, Airport Commission
Kinston-Lenoir County, North Carolina, Airport Commission
Jamestown, North Dakota, Airport Authority
Aircraft Owners and Pilots Association
Air Transport Association
Experimental Aircraft Association
Flying Magazine
General Aviation Manufacturers Association
National Business Aircraft Association
Orange County, California, Pilots Association
Mr. Neil Savidge, FAA employee
Mr. Paul Stachour
Mr. Robert F. Wurzer

List of Major Issues/Source

Program Concepts

Provide a phased deployment of systems and assure system capability prior to consolidation.

Source—Congressman Don Young, National Association of Air Traffic Specialists, State of Maine Department of Transportation, Air Transport Association.

Identify requirement for FSS on general aviation airport vice collocation at ARTCC.

Source—*Flying Magazine*, National business Aircraft Association.

Present part-timing contradicts Modernization Plan, FAA should increase staff vice reducing service.

Source—Aircraft Owners and Pilots Association, National Business Aircraft Association.

Why was Alaska included in Plan and are number of proposed FSS, adequate?

Source—Aircraft Owners and Pilots Association.

Provide justification for increased leased communications cost.

Source—State of Michigan Aeronautics Commission.

What is safety impact of less experienced pilot using direct access?

Source—State of Michigan Aeronautics Commission.

Assure future FAA support on FSS program.

Source—Aircraft Owners and Pilots Association.

What is justification for 59 stand alone buildings? Are construction funds sufficient?

Source—National Business Aircraft Association.

Program Coordination

Identify proposed FSS locations.

Source—City of Redwood Falls, MN, National Business Aircraft Association, New York State Department of Transportation, State of Michigan Aeronautics Commission.

Provide advance notification on FSS part-timing and closures.

Source—Aircraft Owners and Pilots Association.

Provide single point of contact for FSS program.

Source—National Business Aircraft Association.

System Accessibility

Provide assurance on system accessibility.

Source—City of Redwood Falls, MN, State of Michigan Aeronautics Commission.

Provide national toll-free telephone service to FSSs.

Source—Aircraft Owners and Pilots Association.

Provide direct access, or alternatives, to Kansas City weather system and ARTCC computers.

Source—National Business Aircraft Association.

Provide status indications on remote systems.

Source—Mr. Neil Savidge.

System Support

FAA must not establish a major program office with infinite life span for the FSS program.

Source—National Business Aircraft Association.

Provide for adequate and timely training of additional staff required for automation.

Source—National Association of Air Traffic Specialists.

Assure reliability of remote weather systems in Alaska.

Source—Representative Don Young.

Assure reliability of telephone systems.

Source—Mr. Neil Savidge.

Assure reliability of weather observations.

Source—Aircraft Owners and Pilots Association, City of Redwood Falls, MN, National Association of Air Traffic Specialists.

Assure reliability of air/ground communications.

Source—City of Redwood Falls, MN.

System Capability

Assure the availability of air/ground communications.

Source—Aircraft Owners and Pilots Association, City of Redwood Falls, MN, National Association of Air Traffic Specialists.

Continue existing emergency service (direction finder, ELT).

Source—Aircraft Owners and Pilots Association, National Association of Air Traffic Specialists.

Continue mass weather dissemination.

Source—Aircraft Owners and Pilots Association, City of Redwood Falls, MN.

Continue to provide weather observations.

Source—Aircraft Owners and Pilots Association, Air Transport Association, National Association of Air Traffic Specialists.

Continue to improve today's FSSs.

Source—Aircraft Owners and Pilots Association, National Association of Air Traffic Specialists, National Business Aircraft association.

Continue operation of airport lighting if now provided by FSS.

Source—Aircraft Owners and Pilots Association.

[FR Doc. 80-38345 Filed 12-10-80; 8:45 am]

BILLING CODE 4910-13-M

Office of the Secretary

[Notice 80-8b]

Schedule for Awarding Senior Executive Service Bonuses

AGENCY: Department of Transportation (DOT).

ACTION: Notice.

SUMMARY: In accordance with Office of Personnel Management guidelines requiring that each Agency publish a Notice in the Federal Register of the Agency's schedule for awarding Senior Executive Service (SES) Bonuses at least 14 days prior to the date on which awards will be paid, DOT announces that it intends to award SES Bonuses for the rating cycle of April 30, 1980 through September 30, 1980, with payouts scheduled by December 26, 1980.

Issued in Washington, D.C., on December 4, 1980.

Robert L. Fairman,

Acting Assistant Secretary for Administration.

[FR Doc. 80-38395 Filed 12-10-80; 8:45 am]

BILLING CODE 4910-62-M

DEPARTMENT OF THE TREASURY

Customs Service

[T.D. 80-291]

White or Irish Potatoes, Other Than Certified Seed—Tariff-Rate Quota

AGENCY: U.S. Customs Service, Department of the Treasury.

ACTION: Announcement of the quota quantity for white or Irish potatoes, other than certified seed, for the 12-month period beginning September 15, 1980.

SUMMARY: The Tariff-rate quota for white or Irish potatoes, other than certified seed, pursuant to item 137.25, Tariff Schedules of the United States, for the 12-month period beginning September 15, 1980, is 45 million pounds.

EFFECTIVE DATES: The 1980 tariff-rate quota is applicable to white or Irish potatoes described in item 137.25, TSUS, entered, or withdrawn from warehouse, for consumption during the 12-month period beginning September 15, 1980.

FOR FURTHER INFORMATION CONTACT: Helen C. Rohrbaugh, Head, Quota Section, Duty Assessment Division, Office of Commercial Operations, U.S. Customs Service, Washington, D.C. 20229 (202-566-8592).

SUPPLEMENTARY INFORMATION: Each year the tariff-rate quota for potatoes described in item 137.25, Tariff Schedules of the United States (TSUS), is based on the estimate by the Department of Agriculture of potatoes produced during the calendar year.

The estimate of the production of white or Irish potatoes, including seed potatoes, in the United States for the calendar year 1980, made by the United States Department of Agriculture as of September 1, 1980, was in excess of 21 billion pounds.

In accordance with headnote 2, part 8A, of schedule 1, Tariff Schedules of the United States, the quota quantity is not increased because the estimated production is greater than 21 billion pounds. (QUO-2-CT:D:S:Q)

Dated: December 5, 1980.

William T. Archey,

Acting Commissioner of Customs.

[FR Doc. 80-38459 Filed 12-10-80; 8:45 am]

BILLING CODE 4810-22-M

Office of the Secretary

Taxing Foreign Exchange Gains and Losses

This document presents a system for taxing foreign exchange gains and losses. The document is based upon the Treasury's own studies and public comments received in response to the Treasury request for comments in April 1980. Treasury expresses no view as to the extent to which its proposals represent current law or may require legislation. Moreover, the positions taken in the discussion draft are tentative and subject to change based on public comment and further study.

Comments should be addressed to H. David Rosenbloom, International Tax Counsel, Room 3064, Main Treasury Building, Treasury Department, Washington, D.C. 20220. For further information contact Thomas Horst, Deputy Director (International), Office of Tax Analysis, U.S. Treasury Department, Washington, D.C. 20220, (202) 566-8784, not a toll-free number.

Dated: December 8, 1980.

Donald C. Lubick,

Assistant Secretary (Tax Policy).

Foreign Exchange Gains and Losses

I. General Framework

Set forth below is a suggested approach to U.S. tax treatment of foreign exchange gains and losses. A foreign exchange gain or loss arises whenever a transaction (e.g., a loan, or a forward exchange contract) is denominated in a foreign currency and the value of the foreign currency changes between the time the transaction is entered and the time it is closed, or when transactions are recorded on books properly kept in a foreign currency and the value of the currency changes during the period for which the books are kept. The rules discussed below would apply to foreign exchange gains and losses arising in a trade or business (other than a trade or business of dealing in foreign currency, foreign-currency-denominated securities, or forward exchange contracts) conducted by a corporation, trust or estate, partnership, or sole proprietor. The tax consequences of foreign exchange gains and losses of an investor (except in stock in a subsidiary), a dealer, or an employee are not addressed. No view is expressed as to the extent to which the approach described here represents current law or may require legislation. Moreover, the draft does not necessarily represent positions which may be taken subsequently by the Treasury or the Internal Revenue Service.

The tax consequences of business-related exchange gains and losses would depend, first, upon identification of a functional currency for each business entity of a taxpayer. In general, each "trade or business" under section 446(d) of the Internal Revenue Code would constitute a separate "entity."

An entity's functional currency would be the primary currency of the economic environment in which the entity operates. It is presumed that an entity's functional currency would be the currency of the country in which the entity is located and the currency of the country in which the books of record are maintained. In some instances, however, a foreign entity's functional currency may not be the currency of the country where the entity is located even though that currency is used in the books of records; [1] see, for instance, Examples 1, 2, and 3 below.

[1] The statement of these criteria is identical to that of the Financial Accounting Standards Board, *Foreign Currency Translation*, Exposure Draft.

Footnotes continued on next page

Although the identification of a functional currency would depend on the facts and circumstances of each specific entity, consistent criteria for identifying the functional currencies of entities in different countries conducting otherwise similar trades or businesses would be required. Moreover, if in preparing a financial statement mandated by any Federal agency a taxpayer were required to use essentially the same criteria in specifying the functional currency of an entity, that specification would be a factor in determining the proper functional currency for income tax purposes. If in a particular case the facts and circumstances do not clearly require the specification of a particular currency, taxpayers would have discretion in choosing among the possible alternatives the functional currency to be used for tax purposes.

The functional currency would play a critical role in the computation of income or loss for tax purposes. If an entity's functional currency were the U.S. dollar, but its books of record were kept in a different currency, net gain or loss would be computed under a "separate transactions" method or a "net worth" method structured to approximate the "separate transactions" result. By contrast, if an entity's functional currency were a currency other than the U.S. dollar, income or loss computed in the functional currency would be translated directly into dollars at an appropriate exchange rate—i.e., a "profit and loss" method would be used. Thus, whether net gain or loss is computed under a "net worth" method or a "profit and loss" method would depend upon what the functional currency of the entity was.

Section II provides rules by which exchange gain or loss on specific transactions denominated in a currency other than an entity's functional currency (e.g., the foreign-currency-denominated transactions of an entity using the U.S. dollar as its functional currency) would be treated. In summary:

Gain or loss would be recognized on the sale or exchange of a foreign-currency-denominated financial asset (or upon receipt of repayment in the case of foreign-currency-denominated indebtedness) and would be treated as if interest income received with respect to that asset or indebtedness had been increased or decreased, respectively, by the amount of such gain or loss;

Gain or loss on certain designated balances of foreign currency itself could be accrued by valuing such balances at current exchange rates;

Gain or loss on the discharge of a foreign-currency-denominated liability would be recognized and treated as if the interest expense incurred with respect to that liability had been decreased or increased, respectively, by the amount of such gain or loss;

If a forward exchange contract was hedging a specific foreign-currency-denominated item, gain or loss on the discharge of the contract would be treated in the same manner as gain or loss on the hedged item.

Gain or loss on a forward exchange contract hedging an accounting exposure arising under generally accepted accounting standards or hedging stock in a controlled foreign corporation would be ordinary and domestic source.

Section III below sets forth rules by which functional currency amounts would be computed when an entity keeps its books of record in a currency other than its functional currency. In summary, the amount of net gain or loss, its character and source, the amount of foreign income tax paid or accrued, and all other amounts relevant to the determination of income tax liability would be determined, if practicable, by translating each transaction into functional currency at the exchange rate for the date the transaction is recorded for tax purposes. If a "separate transactions" method were not feasible, a "net worth" method would be used to approximate a "separate transactions" result.

Section IV provides rules with respect to income earned by an entity which is a part of a U.S. person and which has properly specified a currency other than the dollar as its functional currency. In such cases, gain or loss would be computed by treating the functional currency as "money" in the hands of the entity and, by implication, treating the dollar from the entity's standpoint as if it were a foreign currency. The entity's net gain or loss and other amounts necessary to compute the U.S. tax liability would be translated from functional currency into dollars at an appropriate exchange rate. In addition, special rules are proposed for recognizing gain or loss on the sale of property (including the entity's functional currency) remitted by an entity to its head office. These rules would assure that the total U.S. dollar amount of profit or loss recognized over the life of an entity would be the same whatever its functional currency may have been.

The income and deductions effectively connected with a U.S. trade or business of a foreign taxpayer would be computed in essentially the same way as those of an entity which is part of a U.S. person, but which uses a foreign currency as its functional currency.

Section IV also provides rules for taxing distributions to U.S shareholders by foreign corporations whose functional currency is a currency other than the dollar. In general, the foreign corporation's earnings and profits, its accumulated profits, and its foreign taxes would be translated from the corporation's functional currency into dollars at the exchange rate for the date the distribution is considered to have been received by the U.S. shareholder. The accounts would then be adjusted to reflect the distribution and translated back into the functional currency at the same exchange rate as was used to translate the predistribution amounts into dollars. Finally, if a foreign corporation with previously taxed earnings made a distribution, the tax consequences of the distribution would first be computed without regard for the previous taxation. Then the dollar amounts of gross income and deemed-paid foreign tax credit which would otherwise be recognized by the shareholder would be offset by the dollar amounts of previously taxed earnings and associated previously claimed credits.

Translating accumulated profits and foreign taxes paid at the exchange rate for the date a distribution is received results in a tax benefit if the functional currency of the foreign corporation has been appreciating against the dollar, and a tax penalty if the functional currency has been depreciating against the dollar. These distortions would be avoided if foreign taxes were translated at the exchange rate for the date they were paid, and the foreign exchange gain or loss component of any distribution were ordinary and domestic source. However, translating foreign taxes paid at the exchange rate for the date of distribution preserves the historic ratio between foreign taxes and accumulated profits, minimizes administrative and transitional problems, and appears to be the decided preference of those commenting on the Treasury's release of April 1980.

Footnotes continued from last page

August 28, 1980, paragraph 15. As noted below, however, the functional currency of an entity for income tax purposes may differ from that used in preparing any financial statement. The Treasury recognizes that implementation of a functional currency approach would require more precise criteria than are stated here. In stating only general criteria, the Treasury is seeking public comment not only on the functional currency concept, but also on the specific criteria that would be required to implement that approach.

II. Specific Transactions Denominated in a Currency Other Than the Functional Currency

This section sets forth rules for treating gains and losses arising on transactions denominated in a currency other than the entity's functional currency. The rules apply not only to entities having the U.S. dollar as their functional currency, but also to entities computing gain or loss in a currency other than the dollar. For ease of exposition, in this Section a "foreign" currency means any currency (including the U.S. dollar) other than the entity's functional currency.

A. Foreign-Currency-Denominated Financial Assets

Because foreign-currency-denominated items of income (e.g., receipts from a sale of inventory for foreign currency) and expense are generally translated at the exchange rate for the date they are recognized for tax purposes, no foreign exchange gain or loss, as the terms are used here, arises with respect to such items. However, upon the sale or exchange of a foreign-currency-denominated financial asset[2] or upon receipt of repayment of foreign-currency-denominated indebtedness, foreign exchange gain or loss would be recognized.[3] Such gain or loss would have the same character and source as a comparable increase or decrease in interest income received with respect to the asset[4]—see Examples 4 and 5.

For ease of exposition, the "source" of a foreign exchange gain refers not only to its geographic source for purposes of computing the foreign tax credit limitation, but also, unless otherwise stated, to all other categories of gross or net income relevant to the computation of U.S. tax liability (e.g., foreign oil and gas extraction income, taxable income attributable to a DISC, taxable income effectively connected with a trade or business within the United States). The source of a loss or expense means the class of gross income to which such loss or expense is properly allocated or apportioned.

These general rules would, however, have two narrow exceptions. First, if an entity received foreign currency[5] and immediately proceeded to convert it into its own functional currency (or other property), the gain or loss on the sale of the foreign currency briefly held by the entity would be recognized separately, but would be characterized and sourced in the same fashion as additional gain or loss on the related transaction—see Example 7.

Second, an entity could elect to accrue gains and losses on "transactions" or "working" balances of foreign currency by valuing such balances at year-end foreign exchange rates. Current market valuation would be limited to those balances held for use in the entity's trade or business; currency held for investment would not qualify. To qualify for this treatment, foreign currency would have to be earmarked as such at the time it was acquired.[6]

B. Foreign-Currency-Denominated Liabilities

Foreign exchange gain or loss would be recognized on the discharge of a foreign-currency-denominated liability regardless of whether such a liability was evidenced by a written instrument. In computing the income tax liability of the person incurring the foreign-currency-denominated liability, such a gain or loss would be treated as if the interest paid with respect to that liability had been reduced or increased, respectively, by the amount of the gain or loss—see again Examples 4 and 5.

C. Forward Sale and Purchase Contracts

In general, the treatment of gain or loss on a forward sale or purchase contract[7] would depend on whether the contract was hedging another foreign-currency-denominated item. A forward contract *hedges* a foreign-currency-denominated item to the extent that the impact of a change in the value of the foreign currency on the functional currency value of the forward contract, either alone or in combination with other such contracts, offsets the impact of that same change on the functional currency value of the foreign-currency-denominated item. A hedging relationship could be established either by reference to specific facts and circumstances (e.g., the amount of the forward contract, particular currency, initial date, and maturity) clearly indicating a hedging motive, or by proper earmarking of a contract. Procedures would be developed under which the intended nature of the contract could be established irrevocably at the time it was entered into. If facts and circumstances did not clearly compel the result, the presence or absence of earmarking would be evidence of whether a hedging relationship exists. The tax consequences of gains or losses arising outside a hedging context are not addressed in this proposal.

Gain or loss would be recognized on the sale or exchange of a forward sale or purchase contract itself, on the cancellation with compensation of the contractual rights and obligations, and on the sale (but not the purchase) of foreign currency under the contract. The character and source of the gain or loss on a hedging contract would be the same as those of gain or loss on the item hedged:

1. The gain or loss on a forward sale contract hedging the principal amount of a specific foreign-currency-denominated financial asset would be characterized and sourced in the same manner as an increase or decrease in interest received with respect to that asset.

2. The gain or loss on a forward sale contract hedging an item of income anticipated, but not yet received, by the taxpayer would be characterized and sourced in the same manner as an increase or decrease, respectively, in the amount of that item of income.[8]

---

[2] A *foreign-currency-denominated financial asset or liability* is any financial asset or liability (e.g., a loan) the principal amount of which is determined by the value of one or more foreign currencies. Such an asset or liability need not require or even permit repayment with a foreign currency as long as the principal amount is determined by reference to one or more such currencies.

[3] The *foreign exchange gain or loss* on a foreign-currency-denominated financial asset or liability equals the taxpayer's basis in that asset or liability stated in the foreign currency (not in its functional currency) multiplied by the appreciation or depreciation, as appropriate, in the functional currency value of the foreign currency between the time the asset was acquired and the time it was sold or exchanged, or the time the liability was incurred and the time it was discharged—see Examples 4 and 5. The amount of such gain or loss is limited, however, to the total gain or loss recognized on disposition of the item—see Example 6.

[4] If such a U.S.-source foreign exchange gain was derived by a foreign person, but was not effectively connected with a trade or business within the United States, such gain would not be considered interest or other fixed and determinable annual or periodic gain, profit or income under section 871(a) or 881(a) and would not, therefore, give rise to a withholding tax liability under section 1441 or 1442.

[5] *Foreign currency*, as the term is used here, includes not only coin and currency *per se*, but also foreign-currency-denominated demand deposits and similar instruments issued by a bank or other financial institution.

[6] This rule would be similar to the present rule allowing dealers in securities, cotton, grain, and other commodities to value their trade-or-business inventories, but not similar property held for their own account, at current market value.

[7] A *forward sale contract* is any contract to sell or exchange foreign currency at a future date under terms fixed in the contract. A *forward purchase contract* is any contract to use functional currency to purchase foreign currency at a future date under terms set forth in the contract. A contract to exchange one foreign currency for another at a future date under terms fixed in the contract would be considered a forward sale, not a forward purchase, contract.

[8] If a taxpayer enters into a forward contract to hedge the receipt or payment of foreign currency, and the item is accrued for tax purposes after entering into the contract, but before the foreign currency is actually received or paid, the taxpayer would choose when it enters into the contract to apportion the gain or loss on the contract between its dual functions (hedging first the anticipated item of income or expense and then the receivable or

Footnotes continued on next page

3. The gain or loss on a forward purchase contract hedging the principal amount of a specific foreign-currency-denominated liability would be characterized and sourced in the same manner as interest paid with respect to that liability.

4. The gain or loss on a forward purchase contract hedging a specific foreign-currency-denominated expense anticipated, but not yet incurred, would be characterized and sourced in the same manner as a decrease or increase in that expense. (Contracts hedging foreign income taxes paid or accrued are described in Part D below.)

5. The gain or loss on a forward contract hedging the taxpayer's stock in a controlled foreign corporation, or hedging an accounting exposure arising under generally accepted accounting practices on a consolidated financial statement which includes the taxpayer, would be ordinary and domestic source.[9]

6. The gain or loss on a forward exchange contract specifically hedging the gain or loss on another forward exchange contract would be characterized and sourced in the same manner as that on such other contract.

7. If a forward exchange contract was clearly hedging one or more foreign-currency-denominated items, but had not been specifically earmarked and could not be unambiguously associated with any specific item or items, the gain or loss would be ordinary and domestic source.

D. Amount of Income Tax Available for Credit

In general, the amount of foreign income tax paid or accrued would be determined by translating the foreign-currency-denominated amount at the exchange rate for the date the tax is paid or accrued.

1. Taxes withheld (either by law or under a binding legal obligation) from gross income would be considered paid on the date the gross income is recognized.

2. Taxes accrued, but not paid, would have to be restated upon payment to reflect the exchange rate for the payment date.

3. A foreign exchange gain or loss attributable to the payment of a foreign income tax liability with appreciated or depreciated foreign currency would be recognized at the time the tax was paid—see Examples 8 and 9.

4. If the taxpayer established that a forward contract was specifically hedging a foreign income tax liability, the gain or loss on that contract would not be recognized as an increase or reduction in income when the contract was discharged, but would be reflected in the amount of foreign tax available for credit—see Example 10.

5. The treatment of income tax refunds received or accrued and forward sales contracts specifically hedging such refunds would be similar to that of income taxes paid or accrued and forward purchase contracts hedging such taxes, respectively.

6. The amount of "deemed paid" credit which would be allowed to a corporate shareholder in a foreign corporation whose functional currency was other than the dollar is described in Section IV below.

III. Entities Using One Currency as Their Functional Currency and Maintaining Books of Record in Another Currency

This section sets forth guidelines for translating into functional currency, if necessary, amounts stated in the currency in which books of record are maintained. The objective is to approximate insofar as may be possible the results that would have been obtained had the books of record been kept in the functional currency.

A. Net Gain or Loss

It may be feasible to maintain separate books in the functional currency and translate each and every transaction at the exchange rate for the date the transaction is recorded for tax purposes. If practicable, such a "separate books" or "separate transactions" method would be used. Otherwise, the amount of net gain or loss would be approximated by a "net worth" method according to the following rules:

1. A balance sheet conforming substantially with U.S. tax principles (including those set forth in Section II above) would be prepared in the currency in which the entity's books of record are maintained.

2. Each asset would be translated into the functional currency at the average exchange rate[10] for the year[11] in which it was acquired.

3. Each liability (except for accrued income taxes and other non-deductible expense items) would be translated into the functional currency at the average exchange rate for the year in which it was incurred.

4. The increase or decrease in net worth between the beginning and the end of the year, stated in the functional currency, would be computed.

5. All non-deductible distributions (e.g., remittances or dividends, foreign income taxes, non-deductible expenses, etc.) would be translated into the functional currency at the exchange rate for the date of distribution or remittance.

6. All non-taxable transfers to the entity would be translated into the functional currency at the exchange rate for the date of transfer.

7. Net gain or loss in the functional currency would be the amount determined at step 4 added to that at step 5, and reduced by the amount determined at step 6.

This method is illustrated in example 11.

B. Character and Source

If total gain or loss can be calculated under a "separate books" or "separate transactions" method, so too would such gain or loss be characterized and sourced. And even if net gain or loss must be calculated under a "net worth" method, transactions giving rise to capital gain or loss or to special types of gross or net income defined by the code may be relatively infrequent. If so, the amount of net gain or loss in such a category (e.g., capital gain) would be determined by reference to the specific transactions.

If the amount of gain or loss in any special category could not practicably be computed under a "separate transactions" method, it would be computed as follows (see again Example 11):

1. The amount of gain or loss in such category would be computed by applying U.S. tax principles (including those set forth in Section II above) to transactions as stated in the currency in

---

Footnotes continued from last page

payable) or to attribute the entire gain or loss on the contract to its predominant function.

[9] A contract hedging an anticipated distribution from a foreign corporation would be included in the second category enumerated above and not in this category.

[10] An *average exchange rate* for the year is a rate which, if used to translate total gross receipts of an entity during the year, would produce approximately the same functional currency amount as would have been obtained had each and every gross receipt been translated at the exchange rate for the date the receipt was recorded for tax purposes. Taxpayers would devise reasonable procedures for constructing an appropriately weighted average of exchange rates during the year. The same general procedure would ordinarily be used for different entities of the same taxpayer unless the use of different methods was shown to result in a clearer determination of each entity's income. With respect to any particular entity, the method of determining the average exchange rate would be considered one element in a method of accounting and subject to change only with the permission of the IRS.

[11] A *year* means the taxable year, or any portion thereof, for which net gain or loss, etc., must be calculated.

which the books of record are maintained.

2. The amounts determined in step 1 would be translated into functional currency amounts at the average exchange rate for the year.

3. The difference between aggregate net gain or loss as computed under the "net worth" method in Part A above and the translated net gain or loss calculated at step 2 would be computed.

4. The difference calculated at step 3 would be apportioned among each category calculated at step 2 on the basis of gross receipts in each category as stated in the currency in which the books of record are kept.

C. Amount of Foreign Income Tax Paid or Accrued

The amount of foreign income tax paid or accrued would be computed by translating the amount as stated in the currency in which the books of record are kept at the exchange rate for the date the tax was paid or accrued. If the exchange rate changed between the time a tax was accrued and the time it was paid, the amount available for credit would be restated according to the rules set forth in Part D of Section II above.

IV. Entities Using a Currency Other Than the Dollar as Their Functional Currency

A. Branches and Other Entities of U.S. Persons

1. *Net Gain or Loss*

This section sets forth rules by which the net gain or loss of an entity with a functional currency other than the dollar would be translated into dollars for U.S. income tax purposes. It also provides rules under which gain or loss would be recognized on the sale or exchange of currency or other property remitted by an entity to the head office.[12] These latter rules assure that if an entity is liquidated, its assets sold and its liabilities discharged, the cumulative gain or loss recognized by the taxpayer over the life of the entity would be the same whatever its functional currency.

Specifically:

1. Aggregate gain or loss as computed and recorded in the functional currency of the entity would be translated into dollars at the appropriate exchange rate as computed below:

a. If the entity had a loss in any year, that loss would be "rolled back" and translated at the same average exchange rate applied to unremitted gain from the most recent years for which such unremitted gain was not offset by another such loss. That is to say, a last-in-first-out (LIFO) rule would apply. If the loss exceeds all previous unremitted gain, the excess would be translated at the exchange rate for the date of the most recent transfer of currency or other property from the head office. Only if the loss exceeds all previous unremitted gains and all previous transfers from the head office would that excess loss be translated at the average rate for the current year.

b. If any loss was translated at the average rate for the current year, rather than "rolled back," then an equal amount of net gain or transfers from the head office in future years, whichever occurred first, would be "rolled back" and translated at the average rate for that earlier loss year. Net gain in excess of such previous year's loss would be translated at the average exchange rate for the current year.

In short, a net gain would typically be translated at the average exchange rate for the current year, whereas a net loss would typically by translated at the average exchange rate for one or more earlier years. The ratio of the U.S. dollar value of the net gain or loss computed under the translation rules set forth above to its value stated in the entity's functional currency is defined to be the *appropriate* exchange rate. The computation of the appropriate exchange rate is illustrated in Example 12.

2. If an entity makes a remittance to the head office, additional gain or loss would be recognized on the sale or exchange of the remitted property by the head office:

a. If an entity remits its own functional currency and the head office immediately converts that currency into its own functional currency, the taxpayer would recognize a foreign exchange gain or loss, ordinary and domestic source, equal to the amount of functional currency remitted multiplied by the appreciation or depreciation in the value of the entity's functional currency between the time the gain was considered to have been earned by the entity or transfers received from the head office and the time the currency was remitted and converted. The same LIFO rule described above for "rolling back" and translating the entity's losses would apply in determining which year's gain or which previous transfer from the head office was considered to have been remitted. If the entity makes a remittance in a year in which it has a loss, the loss would be "rolled back" and translated at the appropriate rate before the gain or loss arising on the sale of the remitted currency was computed. The computation of such gain or loss is illustrated in Examples 12, 13 and 17.

b. If the head office does not immediately convert the functional currency remitted by an entity, the taxpayer would also recognize on the eventual sale additional gain or loss attributable to the appreciation or depreciation in the value of the currency subsequent to its remittance. Unlike the gain or loss described above, which would necessarily be ordinary and domestic source, the treatment of gain or loss accruing subsequent to the remittance would be determined by facts and circumstances relating to the sale or exchange of the remitted currency. For example, if the functional currency remitted by the entity was subsequently held by the head office for use in its own trade or business, then under the rules set forth in Section II above, the additional gain or loss would be treated as if interest received with respect to that currency had been increased or decreased by the amount of the gain or loss.

c. If an entity remits property other than its own functional currency, the fair market value of that property as stated in the entity's functional currency may differ from the functional currency basis in that property. The tax treatment of gain or loss on the sale of property remitted by an entity would conform to that of the combined gain or loss recognized on the sale of similar property by an entity, the immediate remittance of the functional currency proceeds, and the conversion of those proceeds by the head office. The taxpayer's basis in remitted property as stated in the functional currency of the head office would equal its basis as stated in the functional currency of the entity translated at a particular exchange rate. The particular exchange rate is that which would have been applied in computing the gain or loss on a remittance on the same date as the property was remitted of an amount of the entity's functional currency equal to the entity's functional currency basis in the remitted property. In addition, a portion of the total gain or loss recognized by the taxpayer on the sale or exchange of the remitted property would be ordinary and domestic source regardless of the facts and circumstances pertaining to the sale or exchange. That portion would equal the *lesser* of (1) the entity's functional currency basis in the property, or (2) the fair market value of the property on the date of remittance as stated in the

[12] Although remittances are typically to a head office, these same rules apply to remittances to any other entity of the same taxpayer.

entity's functional currency,[13] *multiplied by* the appreciation or depreciation in the value of the functional currency between the time gain represented by the remitted property was derived by the entity and the time the property was remitted. These rules are illustrated by Examples 15, 16 and 19.

d. A remittance of the functional currency of the head office requires special treatment because that currency is property in the hands of the entity and money in the hands of the head office. To avoid the difficulties of ascertaining when such money is disposed of by the head office, the remittance itself would be considered a sale or exchange. Conversely, if the head office transferred the functional currency of the entity to the entity, the transfer itself would also be considered a sale or exchange. This rule is illustrated by Examples 14 and 18.

2. *Character and Source*

The character and source of profit or loss and any other amount relevant to the determination of the U.S. income tax liability with respect to income or loss recorded on the books of an entity would be determined by first computing such amount in the functional currency of the entity and then translating that amount at the appropriate exchange rate for the year, as defined above.

3. *Amount of Income Tax Paid or Accrued*

The amount of income tax paid or accrued by an entity with respect to income derived by the entity during a year would be stated in the functional currency and translated at the appropriate exchange rate for that year.

B. U.S. Entities of Foreign Persons

If a non-resident alien individual, a foreign corporation or other foreign person has a taxable entity in the United States, the rules set forth above for determining the amount of gain or loss of a foreign entity of a U.S. person would also apply in determining the amount of gain or loss of a U.S. entity of a foreign person. If a U.S. entity remitted property which had been used in its U.S. trade or business, the portion of any gain or loss accruing prior to a remittance, but realized on the sale or exchange of that property subsequent to its remittance, would be considered effectively connected with its U.S. trade or business.

C. Distributions From Foreign Corporations

1. *Actual Distributions*

The earnings and profits, accumulated profits, and foreign taxes of a foreign corporation would be determined in the functional currency of that corporation. Upon an actual distribution of functional currency (or other property) by the foreign corporation, the fair market value of the distribution, the earnings and profits, the section 902 accumulated profits, and foreign taxes would all be translated at a common exchange rate:

—If functional currency is converted to dollars and immediately distributed, or *vice versa*, the common exchange rate for translation would be the conversion rate.

—If functional currency is distributed and not immediately sold or exchanged, or if property other than functional currency is distributed, the common exchange rate is the exchange rate on the date the distribution is recognized for tax purposes by the shareholder.

—If a forward sale contract was considered under the rules set forth in Part C of Section II above to be specifically hedging an actual dividend from a foreign corporation, then the common exchange rate would equal the ratio of the fair market dollar value of the distribution net of the foreign exchange gain or loss on the hedging contract to the amount of the distribution stated in the functional currency of the foreign corporation—see Example 20.

A shareholder's basis in its stock would be computed in the shareholder's own functional currency, not in the functional currency of the foreign corporation making the distribution. After the distribution, the undistributed earnings and profits, undistributed accumulated profits, and foreign taxes would be translated back into functional currency at the common exchange rate applied to the distribution.

2. *Deemed Distributions*

The determination of whether a U.S. shareholder must include in its gross income any amounts deemed distributed by a controlled foreign corporation (e.g., if Subpart F income exceeds 10 percent of gross income), the amounts so included, the earnings and profits of the controlled the foreign corporation, and the deemed-paid credit under section 960 would all be computed by translating functional-currency-denominated amounts at the average exchange rate (as defined above) for the year.

3. *Actual Distributions out of Previously Taxed Earnings and Profits*

If a controlled foreign corporation makes an actual distribution out of earnings and profits which were previously deemed distributed, the amount and character of the actual distribution received and the amount of the deemed paid credit would first be computed without regard to the deemed distribution. The dollar values of gross income and the deemed-paid credit would then be reduced by the dollar values of previously taxed earnings and the previously available deemed-paid credit—see Example 21.

If the exchange rate at which a deemed distribution was translated is less than that at which an actual distribution was valued (i.e., if the foreign currency has depreciated in value), then this procedure would result in a *reduction* in the amount of gross income otherwise subject to tax and a corresponding reduction in the amount of foreign tax otherwise available for credit. In the event that such a reduction in foreign income taxes available for credit exceeded all taxes otherwise available for credit, the net deficiency would be carried back or forward according to the rules applicable to taxes paid or accrued in excess of the foreign tax credit limitation.

Example 1 (Functional Currency)

A U.S. parent corporation, *P*, has a wholly owned U.S. subsidiary, *S*, whose head office is in the United States, although its primary activity is extracting natural gas and oil through a branch in a foreign country. Sales of natural gas and oil are usually billed in U.S. dollars, and significant liabilities and expenses (e.g., loan principal and interest) are often denominated in dollars. Although the foreign country requires the local branch's books to be kept in the local currency, *P* and *S* elect in filing Federally mandated financial statements to use the dollar, not the local currency, as the functional currency of the foreign branch. The criteria for identifying a functional currency in preparing these financial statements are essentially the same as those for tax purposes. *S*'s functional currency for tax purposes would be the dollar.

Example 2 (Functional Currency)

A bank incorporated and with its head office in the United States has a branch in a foreign country. Although the foreign country requires the branch to keep books in the local currency, the branch customarily fixes the terms of its loans to local customers by reference to a contemporary London Inter-Bank Offered Rate (LIBOR) on dollar deposits (e.g., the interest rate on outstanding

[13] The amount of ordinary, domestic source gain or loss would be determined by the lesser of these two amounts, rather than by the functional currency basis alone, because had the property been sold at a loss prior to any remittance, the amount of gain available for remittance would already have been offset by the loss on the sale of the property. In computing the amount of such gain or loss, unremitted gain from the current or previous years would first be reduced by the excess of the basis in the property over its fair market value.

loan principal equals LIBOR plus 2 percent and outstanding loan principal is adjusted to reflect changes in the dollar value of the local currency). Local lending is, in turn, typically funded with dollar-denominated funds borrowed from the head office, other branches and subsidiaries of the same bank, and independent lenders. The bank elects to use the dollar, not the local currency, as the functional currency of the branch for Federally mandated financial reporting purposes. The criteria for identifying a functional currency in preparing these financial statements are essentially the same as those for tax purposes. The dollar would also be the functional currency for tax purposes.

Example 3 (Functional Currency)

A U.S. taxpayer incorporates a wholly owned subsidiary in Switzerland. All books of record are maintained in Swiss francs, and the Swis franc is elected as the functional currency for financial reporting purposes. However, the Swiss company is primarily a base company selling the exports of its U.S. parent corporation, and virtually all of its income is foreign base company sales income within meaning of section 954(d). Most of its transactions are denominated in U.S. dollars or, less frequently, in foreign currencies other than the Swiss franc. Under these circumstances, the IRS may, for U.S. income tax purposes, require that the U.S. dollar be substituted for the Swiss franc as the functional currency of the Swiss company and, thus, that Swiss franc amounts be translated into U.S. dollars under the rules set forth in Section III.

Example 4 (Foreign-Currency-Denominated Assets and Liabilities)

A U.S. corporation, *A*, whose functional currency is the dollar, issues at par value a two-year note for 1,000,000 francs, which is purchased by a second, unrelated U.S. corporation, *B*, whose functional currency is also the dollar. The terms of the note call for semi-annual interest payments of 50,000 francs and repayment of the full face amount after two years. At the time the note is issued, the value of the franc is $.25/franc; at the time the note is retired, the value of the franc has depreciated to $.20/franc.

Upon retirement of the note, *A* would recognize a foreign exchange gain of $50,000 (i.e., its franc basis in the note, 1,000,000 francs, times the $.05/franc depreciation in the value of the franc). This gain would be treated as if interest paid on the note had been reduced by that amount.

Upon retirment of the note, *B* would recognize a foreign exchange loss of $50,000. *B*'s loss would be treated as if interest received with respect to *A*'s note had been reduced by that amount.

Example 5 (Foreign-Currency-Denominated Assets and Liabilities)

The facts are as stated in Example 4, except that *A* redeems its note after eighteen months for 990,000 francs. Because the exchange rate on that date is $.21/franc, the value of the francs given in redemption of the note is $207,900. Thus *A*'s total gain on redemption of the note is $42,100 (i.e., $250,000 minus $207,900).

Of *A*'s total gain of $42,100, $40,00 (i.e., 1,000,000 francs times $.04/franc) would represent foreign exchange gain, which would be treated as if interest expense had been reduced by that amount (see Example 4 above). The remaining $2,100 gain (i.e., $42,100 less $40,000) would be considered gain from the discharge of indebtedness.

B's total loss, $42,100, would consist of a foreign exchange loss of $40,000, and a loss of $2,100 on the redemption of the note. The $40,000 foreign exchange loss would be reated as a reduction in interest received with respect to that note (as in Example 4). The $2,000 loss on the redemption would be treated in accordance with existing law applicable to similar losses on the redemption of a dollar-denominated note.

Example 6 (Foreign-Currency-Denominated Assets and Liabilities)

The facts are the same as in Example 5, except that *A* redeems its note for 1,010,000 francs, rather than 990,000. Because the exchange rate on that date is $.21/franc, the value of the francs given in redemption of the note is $212,100. Thus, *A*'s total gain, $37,900 (i.e., $250,000 less $212,100), is less than what would otherwise be its foreign exchange gain, $40,000 (i.e., 1,000,000 francs multiplied by the $.04/franc depreciation in the value of the franc). The total amount, $37,900, would be treated as a reduction of interest expense to *A* and a reduction of interest income to *B*.

Example 7 (Prompt Conversion of Foreign Currency Received)

A taxpayer receives a dividend of 100 francs at a time when the fair market value of the franc is $.25/franc. Although the taxpayer moves immediately to convert the francs to dollars, because the franc is devalued to $.20/franc before the conversion is effected, the taxpayer sustains a $5 foreign exchange loss. Although the loss would be recognized separately from the receipt of the dividend income, it is treated as a reduction in dividend income from the same source.

Example 8 (Amount of Income Tax Paid)

A U.S. corporate taxpayer with the dollar as its functional currency receives 100 francs income for services. The taxpayer promptly converts 50 francs at $.25/franc to $12.50; the remaining 50 francs are deposited in the taxpayer's bank account (which for present purposes is assumed to be interest-free) in anticipation of a 50 franc foreign tax liability. The 50 franc tax liability is accrued at the end of the year, when the exchange rate is $.24/franc, and paid six months later when the exchange rate is $.20/franc.

Taxable income would be $25, computed by translating pre-tax income, 100 francs, at $.25/franc, the exchange rate on the date the income was received. Foreign income tax of $12 would be accrued at the end of the year, but would have to be amended to $10 to reflect the exchange rate when the foreign tax was paid. The taxpayer would also recognize a foreign exchange loss of $2.50 in the second year when the foreign tax liability of $10 was satisfied with foreign currency in which the taxpayer had a basis of $12.50.

Example 9 (Amount of Income Tax Paid or Accrued)

The facts are the same as in Example 8, except that the taxpayer initially converts the entire 100 francs to $25 and converts $10 back into 50 francs at the time the tax must actually be paid.

The consequence is the same as in Example 8, except that in the second year the taxpayer has not incurred and, thus, would not recognize any foreign exchange loss on payment of the foreign tax.

Example 10 (Amount of Income Paid)

The facts are the same as in Example 9, except that at the time the income is earned the taxpayer enters into a forward purchase contract to buy 50 francs at $.22/franc on the date the tax must be paid. The taxpayer earmarks the forward exchange contract as specifically hedging its foreign tax liability.

The taxpayer would accrue in the first year taxable income of $25 and an income tax liability of $12. When the tax was paid, the loss on the forward purchase contract would be treated as an adjustment to the tax paid, causing the amount of tax available for credit to be amended from $12 to $11 (not $10). Because the $1 loss on the forward exchange contract (attributable to the $.02/franc differential between the exchange rate specified in the forward contract and the spot rate at the time the contract was performed) would already be reflected in the first year's tax paid, no foreign exchange loss would be offset against gross income in the second year.

Example 11 (Computing Functional Currency Amounts from Books of Record Kept in Another Currency)

A branch of a U.S. corporation has the dollar as its functional currency, but keeps its books in francs. The franc-denominated transactions of the entity are too numerous to make a "separate transactions" computation of its net income in dollars practicable. The balance sheet of the entity at the beginning and the end of the year, together with the average exchange rate for the year in which various assets were acquired or liabilities were incurred, are as follows:

Item	Start of year (francs)	Average exchange rate ($/franc)	End of year (francs)	Average exchange rate ($/franc)
Assets:				
Receivables	100	[1].20	120	[1].25
Inventory	100	[1].18	110	[1].23
Net plant and equipment	100	.15	90	.15
Liabilities:				
Payables	50	.20[1]	60	[1].25
Mortgage	50	.15	45	.15

[1] Although receivables and inventory would both be classified as "current" assets, and "payables" as a current liability, a portion of each may nonetheless be considered to have been acquired or incurred prior to the current year, and to that extent they would be translated at the average exchange rate for the earlier year.

If each asset and liability were translated at the average exchange rate for the period in which it was acquired or incurred, the dollar value of net worth would be $35.50 at the beginning of the year and $47.05 at the end of the year, an increase of $11.55 during the year.

In addition, in the course of the year the entity remitted 100 francs, which were promptly converted to dollars at a rate of $.24/franc, and paid foreign taxes of 80 francs on a date when the exchange rate was $.26/franc. Thus, the $11.55 increase in net worth would be augmented by the $24 (100 francs $.24/franc) remittance and the foreign tax payment of $20.80 (80 francs $.26/franc), producing net income of $56.35.

The entity also had numerous transactions giving rise to short-term capital gain or loss, but calculating the separate gain or loss in dollars for each of these transactions is impracticable. The profit and loss statement for the entity, which is prepared in francs but is otherwise in accordance with U.S. tax principles, indicates the entity had 220 francs of ordinary income, 30 francs in short-term capital gains, 50 francs in short-term capital losses, and, thus, 200 francs in net gain. The average exchange rate for the year is $.25/franc. If each of these amounts was translated at the average rate, the corresponding dollar amounts would be $55, $7.50, $12.50 and $50. To compute the dollar value of ordinary income, short-term capital gains, and short-term capital losses, however, the $6.35 difference between net gain calculated under the "net worth" method ($56.35) and net gain as translated from the profit-and-loss statement ($50) would have to be apportioned among the three categories based on gross receipts in the currency in which the books of record are maintained. If gross receipts (not offset by cost of goods sold) giving rise to ordinary income, short-term capital gains and short-term capital losses were 2,000 francs, 200 francs and 300 francs, respectively, the apportionment would be as shown below. (A portion of the foreign exchange gain—i.e., the difference between the gain calculated under the "net worth" method and that calculated under the "profit-and-loss" method—would be offset against the short-term capital loss on the assumption that the amount of the loss which would have been calculated under a separate transactions method, had such been practicable, would have been less than that which was calculated under the "profit-and-loss" method.).

Item	Translated profit and loss statement	Gross receipts (francs)	Apportioned gain or loss	Total gain or loss
Ordinary income	$55.00	2,000	20/25×$6.35=$5.08	$60.08
Short-term capital gains	7.50	200	2/25×6.35=.51	8.01
Short-term capital losses	−12.50	300	3/25×6.35=.76	11.74
Total	50.00	2,500	6.35	56.35

Example 12 (Translating Functional Currency Amounts into Dollars)

On December 31, 1984, a U.S. calendar-year taxpayer converts $26 at $.26/franc to 100 francs and transfers them to an entity using francs as its functional currency. The net profit or loss of the entity, remittances to the U.S. taxpayer's head office, average exchange rate for the taxable year, and exchange rates at year-end when remittances are made and converted are as follows:

Year	Profit or loss (francs)	Year-end remittance (francs)	Dollars per franc: Average rate for year	Dollars per franc: Year-end rate
1985	−100	0	$0.25	$0.24
1986	+200	0	.23	.22
1987	−100	0	.21	.20
1988	+100	50	.19	.18
1989	0	150	.17	.16

The tax consequences would be as follows:

1. In 1985, the 100 franc loss would be translated at $.26/franc, the exchange rate on the date 100 francs were transferred from the head office, so that a $26 loss would be recognized for U.S. tax purposes. The appropriate rate for 1985 would be $.26/franc (i.e., $26/100 francs).

2. In 1986, the 200 franc net gain would be translated at the average rate for 1986, $.23/franc, for a net gain of $46. The appropriate rate for 1986 would be $.23/franc ($46/200 francs).

3. In 1987, the 100 franc loss would be translated at $.23/franc, the translation rate for the 200 franc unremitted net gain for 1986. Thus, the net loss would be $23, and the appropriate rate for 1987 would again be $.23/franc ($23/100 francs).

4. The 100 franc net gain in 1988 would be translated at the average exchange rate for that year, $.19/franc. The 50 francs remitted and converted at the end of the year were worth $9 (i.e., 50 francs times $.18/franc). Since those francs would be considered to have been earned in that year, the taxpayer would also recognize an ordinary, domestic-source loss of $.50 (i.e., 50 francs multiplied by the $.01/franc depreciation in the franc between the time the francs were considered to have been earned and the time they were remitted and converted).

5. In 1989, the entity has no net profit or loss. Of the 150 francs remitted, 50 would be deemed to be from the 1988 unremitted net gain of 50, and the balance from the 1986 unremitted gain of 100 francs. If the francs were converted at an exchange rate of $.16/franc, the head office would recognize an ordinary, domestic-source loss of $1.50 with respect to the former 50 francs (i.e., 50 francs times the difference between $.16/franc and $.19/franc) and a similar loss of $7 with respect to the latter 100 francs (i.e., 100 francs times the $.07/franc difference between $.16/franc and $.23/franc).

Example 13 (Remittance from a Foreign Branch)

A foreign branch of a U.S. corporation whose head office has the dollar as its functional currency has properly elected in its first year of operation to use the franc as its functional currency. In 1982, when the average exchange rate is $.20/franc, the branch earns 100 francs in ordinary, foreign-source income, which it deposits in a franc-denominated bank account. In 1983, when the branch otherwise has no gain or loss, it remits 100 francs. The head office immediately converts those francs at $.25/franc to $25.

The branch profit of 100 francs would translate to $20 in ordinary, foreign-source income. On the conversion of the francs to dollars in 1983, the taxpayer would recognize ordinary, domestic-source income of $5 (i.e., 100 francs times the $.05/franc difference between the averarge rate for the year that the francs were earned and the conversion rate).

Example 14 (Remittance from a Foreign Branch)

The facts are the same as in Example 13, except that in 1983 the *branch* converts the 100 francs to $25, which it remits immediately to the head office.

The branch profit of 100 francs would still be translated to $20. The taxpayer would recognize ordinary, domestic-source income of $5 on the *remittance* of the dollars.

Example 15 (Remittance from a Foreign Branch)

The facts are the same as in Example 13, except that the branch in 1982 converts its 100 francs into 50 marks (a foreign currency) at the exchange rate of 2 francs/mark. In 1983, the mark depreciates *vis a vis* the franc to an exchange rate of 1.6 francs/mark. Because the dollar also depreciates against the franc by the same proportion to $.25/franc, the exchange rate between marks and dollars is at the same rate in 1983, $.40/mark, as it was in 1982. In 1983, the branch converts its 50 marks to 80 francs, which it remits to the head office. The head office converts immediately the 80 francs to $20. The branch engages in no other transactions in 1983.

The 100 franc profit of the branch in 1982 would still be translated to $20. In 1983, the branch would record a 20 franc loss on the conversion of marks to francs (i.e., 50 marks times the difference between 2 francs/mark and 1.6 francs/mark). Because there is no offsetting gain in 1983, that loss would be "rolled back" and translated at the same rate, $.20/franc, as the prior year's gain, producing a loss of $4 to the branch. However, a $4 gain would be recorded by the head office on the conversion of the 80 francs to dollars (i.e., 80 francs times the difference between $.20/franc and $.25/franc). The treatment of the $4 loss recorded by the branch would depend on facts and circumstances relating to the sale of the marks; the $4 gain recorded by the head office on the conversion of the francs would be ordinary and domestic source.

Example 16 (Remittance from a Foreign Branch)

The facts are the same as in Example 15, except that in 1983 the branch remits the 50 marks to the head office, which promptly converts them to $20.

Because the taxpayer's basis in the marks was 100 francs, and the most recently earned net gain of 100 francs was derived by the branch in 1982 and translated at $.20/franc, the taxpayer's basis in the remitted marks as stated in dollars would be $20. The taxpayer would recognize on the conversion of the marks a $4 gain, ordinary and domestic source, *and* a $4 loss, the character and source of which would depend on the facts and circumstances relating to the sale of the marks (*cf.* the results in Example 15). The $4 gain equals 80 francs, the fair market value of the marks on the date of their remittance (which in this instance is less than the taxpayer's 100 franc basis in the marks), multiplied by the $.05/franc appreciation in the value of the franc between the time the gain was derived and the time the marks representing that gain were remitted.

Example 17 (Remittance from a Foreign Branch)

The facts are the same as in Examples 13 and 15, except that in 1982 the branch converts its 100 francs to $20, which it deposits in a bank account. In 1983, the branch converts its $20 back to 80 francs and remits them to the head office, where they are converted to $20.

Because the dollar is a "foreign" currency for the branch, the results would be the same as in Example 15.

The facts are the same as in Example 17, except that in 1983 the branch simply transfer the $2 from its bank account to that of the head office.

Example 18 (Remittance from a Foreign Branch)

Because the dollar is a "foreign" currency for the branch, but not for the head office, the results would be the same as in Example 16, except that the remittance (and not the subsequent disposition) of the dollars would be considered a sale or exchange.

Example 19 (Remittance from a Foreign Branch)

In 1982, a branch in its first year of operation with the franc as its functional currency has a profit of 2,000 francs. The functional currency of the head office is the dollar, and the average exchange rate for 1982 is $.20/franc.

In 1983, when the average rate is $.21/franc, the branch has no profit or loss. It buys for 2,000 francs land, which is a capital asset.

In 1984, when the average rate is $.22/franc the branch has a profit of 1,000 francs.

In 1985, the branch transfers ownership of the land to its head office; the land continues to be a capital asset in the hands of the head office. On the date of the transfer, the fair market value of the land is 3,000 francs. The branch has no profit or loss in that year. The exchange rate on the date of transfer is $.23/franc; the average exchange rate for the year is $.235/franc.

In 1986, the branch has no profit or loss. The average rate for the year is $.245/franc. The head office sells the land for $960 on a date when the exchange rate is $.24/franc.

Under these assumptions, the profits in 1982 and 1984 would be translated at the appropriate (which in this case equals the average) exchange rates for those years, $.20/franc and $.22/franc. Thus, the dollar value of profits would be $400 and $220, respectively.

The taxpayers basis in the land as stated in dollars would equal its basis as stated in the functional currency, 2,000 francs, translated at the same exchange rates as its most recent unremitted gain was translated. Thus, 1,000 francs would be translated at $.22/franc, the average exchange rate for 1984, to $220, and the remaining 1,000 francs would be translated at $.20/franc, the average exchange rate for 1982, to $200. The taxable basis in the land would, therefore, be $420.

When the land is sold or $960 in 1986, the taxpayer would recognize gain of $540 (i.e., $960 less $420). Of that gain, $40 would be considered ordinary and domestic source. The $40 equals 2,000 francs, the lesser of the fair market value (3,000 francs) and the taxable basis (2,000 francs) of the land on the date of its remittance, multiplied by the $.02/franc average appreciation in the value of the franc between the time the gain represented by 2,000 francs was considered to have been earned and the time the land was transferred. (The $.02/franc appreciation equals the difference between $.23/franc, the exchange rate on the date of the transfer, and $.21/franc, the average exchange rate based on the 1,000 francs earned in 1984 and translated at $.22/franc, and the 1,000 francs earned in 1982 and translated at $.20/franc.)

The remaining $500 (i.e., $540 less $40) would be long-term capital gain, the source of which would be determined by reference to the rules relating to the source of gain on the sale of a capital asset.

Example 20 (Distribution from a Foreign Corporation)

In 1982, a foreign corporation, all the shares of which are owned by a U.S. corporation, in its first year of operation with the franc as its functional currency earns a profit of 100 francs and pays a tax on that profit of 40 francs. Earnings and profits at the end of the year and accumulated profits in excess of foreign taxes for the year both equal 60 francs. In June 1982, the U.S. parent corporation enters into a forward exchange contract to sell 30 francs on December 31, 1982 at a rate of $.25/franc. The contract is earmarked as specifically hedging an anticipated dividend of that amount from the subsidiary. On December 31, a dividend of 30 francs is, in fact, declared by the subsidiary and paid to the parent. The exchange rate on that date is $.20/franc. Rather than selling the 30 francs to the opposite party to the forward sale contract, the parent sells the 30 francs received as a dividend on the spot market for $6, and receives compensation of $1.50 from the opposite party for cancellation of the contract. (The $1.50 equals the 30 francs times the $.05/franc difference between the contract and the spot rates on the date of cancellation).

The $1.50 would be teated for all purposes as if the distribution from the foreign corporation were increased by that amount. Consequently, the common exchange rate for translating earnings and profits and the three elements of the "deemed paid" credit formula would be $.25/franc (i.e., the ratio of $6.00 + $1.50 = $7.50 to 30 francs). The distribution would be considered a dividend because the fair market value of the distribution, $7.50 (30 francs times $.25/franc), was less than earnings and profits, $15 (60 francs times $.25/franc). The "deemed paid" credit would equal:

$$\frac{30 \text{ francs} \times \$.25/\text{franc}}{60 \text{ francs} \times \$.25/\text{franc}} \cdot [40 \text{ francs} \times \$.25/\text{franc}] = \$5$$

After the dividend, the remaining earnings and profits, $7.50, would be translated back to 30 francs at the common exchange rate, $.25/franc, and a comparable amount would be restored to the accumulated profits account available for future dividends.

Example 21 (Distribution from a Foreign Corporation)

In 1982, a controlled foreign corporation in its first year of operation has 100 francs of profit before foreign tax and pays 40 francs in foreign taxes. After-tax profits include subpart F income net of taxes and other deductions of 30 francs, which is a deemed dividend under section 951. The average exchange rate for 1982 is $.25/franc.

In 1983, the corporation once again earns 100 francs, none of which is subpart F income, pays 40 francs in foreign income taxes, and actually distributes 100 francs to its U.S. shareholder. The U.S. shareholder immediately converts the 100 francs at $.20/franc to $20.

For U.S. tax purposes, the earnings and profits of the corporation for 1982 are $15 (60 francs times $.25/franc), of which $7.50 are deemed distributed (30 francs times $.25/franc). The deemed dividend would have an associated deemed paid foreign tax credit of and would be grossed up by, $5:

$$\frac{30 \text{ francs} \times \$.25/\text{franc}}{60 \text{ francs} \times \$.25/\text{franc}} [40 \text{ francs} \times \$.25/\text{franc}] = \$5$$

In 1983, the 100 franc distribution has a fair market value of $20 (i.e., 100 francs times $.20/franc). Since earnings and profits calculated without regard to the 1982 deemed distribution would equal 120 francs, which would be translated at $.20/franc to $24 at the time of the distribution, the $20 distribution would be considered a dividend in full. However, $7.50 of that dividend would be excluded as previously taxed earnings under section 959.

The deemed-paid credit and gross-up would equal $5.33 attributable to 1982 profits:

$$\frac{40 \text{ francs} \times \$.20/\text{franc}}{60 \text{ francs} \times \$.20/\text{franc}} [40 \text{ francs} \times \$.20/\text{franc}] = \$5.33$$

plus $8 attributable to 1983 profits:

$$\frac{60 \text{ francs} \times \$.20/\text{franc}}{60 \text{ francs} \times \$.20/\text{franc}} [40 \text{ francs} \times \$.20/\text{franc}] = \$8.00$$

plus $8 attributable to 1983 profits: reduced by the $5 in credit previously claimed with respect to previously taxed income. Thus, the net credit and gross-up with respect to the 1983 distribution would be $8.33 ($5.33 plus $8 less $5), which equals 40 percent of the grossed-up income, $20.83 (i.e., $12.50 plus $8.33). (That is to say, the historic foreign rate of taxation, 40 percent, is maintained even though the corporation has made a distribution out of previously taxed income.)

[FR Doc. 80-38306 Filed 12-10-80; 8:45 am]
BILLING CODE 4810-25-M

UPPER MISSISSIPPI RIVER BASIN COMMISSION

Special Meeting

A Special Meeting of the Upper Mississippi River Basin Commission will be held Thursday, December 18, 1980, from 9:00 A.M. to 2:00 P.M. in Chicago, Illinois, in the Amelia West Room of the O'Hare Hilton Hotel. The purpose of the meeting is to consider Commission adoption of the draft preliminary Master Plan due January 1, 1981.

Neil S. Haugerud,
Chairman.

[FR Doc. 80-36785 Filed 12-10-80; 8:45 am]

Sunshine Act Meetings

Federal Register
Vol. 45, No. 240
Thursday, December 11, 1980

This section of the FEDERAL REGISTER contains notices of meetings published under the "Government in the Sunshine Act" (Pub. L. 94-409) 5 U.S.C. 552b(e)(3).

CONTENTS

	Items
Civil Aeronautics Board	1
Commodity Futures Trading Commission	2-5
Federal Deposit Insurance Corporation	6
Federal Election Commission	7
Federal Energy Regulatory Commission	8
Federal Maritime Commission	9
Federal Reserve System (Board of Governors)	10
National Museum Services Institute	11

1

[M-301, Dec. 4, 1980]

CIVIL AERONAUTICS BOARD.

TIME AND DATE: 9:30 a.m., December 11, 1980.

PLACE: Room 1027, 1825 Connecticut Avenue, N.W., Washington, D.C. 20428.

SUBJECT:

1. Ratification of items adopted by notation.
2. Docket 38767—New York Air Fitness Investigation, Instructions to the staff
3. Docket 30539, Proposed amendments concerning overcharges. (Memo No. 106, 106-A, OGC)
4. Docket 38470, Petition to allow cooperative shippers associations to act as agents for direct carriers. (Memo No. 118, OGC, BDA, BIA)
5. Section 419 subsidy guidelines. (Memo No. 127, OGC, BDA)
6. Docket 38784, Use of book depreciation in determination of service mail rates (Memo No. 129, OGC, BDA)
8. Docket 38140, Application of Air Midwest, Inc., for compensation for losses in providing essential air service at Enid and Ponca City, Oklahoma. (Memo No. 080-B, BDA, OCCR, OGC, OC)
9. Docket EAS-631, Appeal of essential air service determination for Sheridan, Wyoming. (Memo No. 120, BDA, OGC, OCCR)
10. Docket EAS-379, Petition for Modification of the Lakeland Essential Air Transportation Determination filed by the City of Lakeland. (Memo No. 121, OGC, BDA, OCCR)
11. Dockets EAS-549, EAS-552, and 38140—Ponca City's appeal and Enid's comments on their essential air transportation determinations and Air Midwest's notice of its intention to suspend service at Enid and Ponca City, Oklahoma. (Memo No. 080, OGC, BDA)
12. Dockets EAS-336 and 338; Appeals of Essential Air Service Determinations for Kingman and Prescott, Arizona. (Memo No. 087, OGC, OCCR, BDA)
13. Dockets EAS-349, 351 and 352, Essential Air Service determinations for Crescent City, Eureka/Arcata and Merced, California. (BDA, OCCR, OGC) (Memo No. 133)
14. Dockets 38912, 38913, and 38926, Ozark Air Lines' notice to suspend essential air service at Fort Dodge and Mason City, Iowa; request for approval of an alternate service pattern; and application for an exemption to suspend essential air service on less than 90-day notice. (Memo No. 128, BDA, OCCR)
15. Dockets 38730, American Eagle Airlines, Inc.; 38826, Arrow Airways, Inc.; and 38888, Great American Airways, Inc.—Applications for section 418 All-cargo Air Service Certificates. (Memo No. 108, BDA)
16. Docket 38215—Petition for review of staff action granting Pan American World Airways a two-year exemption from section 408 of the Act for the acquisition of Orbis Polish Travel Bureau, Inc. (Orbis, N.Y.). (Memo No. 123, BDA, BIA, OGC)
17. Dockets 38755 and 38761—Petitions of Pacific Southwest Airlines and Air California for removal of Lake Tahoe, California as a named point on their certificates. (Memo No. 119, BIA)
18. Docket 38901, Application of the International Air Transport Association for approval of an agreement establishing a Fuel Market Monitoring Program (FMMP). (Memo No. 131, BDA)
19. Docket 36497, EDR-387/PSDR-68, Notice of Proposed Rulemaking to implement competitive pricing for mail transportation by establishing zones of rates within which carriers and Postal Service would be free to contract. (Memo No. 130, BDA, OEA)
20. Docket 35686, Reduce fares between New York/Newark and Los Angeles/San Francisco proposed by American Airlines, Inc. (Memo No. 107, BDA)
21. Docket 38623, IATA agreements readopting U.S./Mexico-Japan and U.S./Canada-South America piece-related baggage systems. (Memo No. 125, BIA, BDA)
22. Docket 38623, IATA agreements concerning various North/Central Pacific fares. (Memo No. 124, BIA, BDA)
23. Dockets 38719, 38798, 38827, 38889, Applications of Constitution Airlines, Inc., American Eagle Airlines, Inc., Arrow Airways, Inc. and Great American Airways, Inc. for certificates to engage in transatlantic charter air transportation of cargo. (BIA, OGC, BALJ)
24. Docket 38721, Application of Global International Airways Corp. to engage in scheduled foreign air transportation of property between the U.S. and Colombia. (Memo No. 113, BIA, OGC)

STATUS: Open.

PERSON TO CONTACT: Phyllis T. Kaylor, the Secretary (202) 673-5068.

[S-2266-80 Filed 12-8-80; 4:28 pm]

BILLING CODE 6320-01-M

2

COMMODITY FUTURES TRADING COMMISSION.

TIME AND DATE: 11:30 a.m., Tuesday, December 16, 1980.

PLACE: 2033 K Street NW., Washington, D.C., fifth floor hearing room.

STATUS: Closed.

MATTERS TO BE CONSIDERED: Second Quarter Budget Programs, Plans and Priorities.

CONTACT PERSON FOR MORE INFORMATION: Jane Stuckey, 254-6314.

[S-2273-80 Filed 12-9-80; 1:02 pm]

BILLING CODE 6351-01-M

3

COMMODITY FUTURES TRADING COMMISSION.

TIME AND DATE: 10 a.m., Tuesday, December 16, 1980.

PLACE: 2033 K Street, NW, Washington, D.C. Fifth floor hearing room.

STATUS: Open.

MATTERS TO BE CONSIDERED: Trading Prohibition for Exchange and Clearing Corporation Employees:

—The Commission will consider recommendations of the Division of Trading and Markets on a proposed rule to prohibit exchange and clearing corporation employees from trading in commodity furure contracts.

Amendment to the Definition of the Term "Rule" in Regulation 1.41:

—The Commission will consider recommendations of the Division of Trading and Markets on an amendment of the definition of the term "rule" as it relates to contract market actions and the scope of CFTC review.

Conflict of Interest Discussion:

—The Commission will discuss an issues paper from the Office of the General Counsel regarding general conflict of interest issues related to governing boards of contract markets.

CONTACT PERSON FOR MORE INFORMATION: Jane Stuckey, 254-6314.

[S-2274 Filed 12-9-80; 1:02 pm]

BILLING CODE 6351-01-M

4

COMMODITY FUTURES TRADING COMMISSION.

TIME AND DATE: 2 p.m., Tuesday, December 16, 1980.

PLACE: 2033 K Street N.W., Washington, D.C., fifth floor hearing room.

STATUS: Closed

MATTERS TO BE CONSIDERED: Enforcement matters.

CONTACT PERSON FOR MORE INFORMATION: Jane Stuckey, 254-6314.

[S-2272-80 Filed 12-9-80; 1:02 p.m.]

BILLING CODE 6351-01-M

5

COMMODITY FUTURES TRADING COMMISSION.

TIME AND DATE: 9:30 a.m., Friday, December 12, 1980.

PLACE: 2033 K Street N.W., Washington, D.C., Eight floor conference room.

STATUS: Closed

MATTERS TO BE CONSIDERED: Personnel Matters.

CONTACT PERSON FOR MORE INFORMATION: Jane Stuckey, 254-6314.

[S-2267 Filed 12-8-80; 4:50 p.m.]

BILLING CODE 6351-01-M

6

FEDERAL DEPOSIT INSURANCE CORPORATION.

Pursuant to the provisions of subsection (e)(2) of the "Government in the Sunshine Act" (5 U.S.C. 552b(e)(2)), notice is hereby given that at its open meeting held at 2:00 p.m. on Monday, December 8, 1980, the Corporation's Board of Directors determined, on motion of Chairman Irvine H. Sprague, seconded by Mr. Cantwell F. Muckenfuss III, acting in the place and stead of Director John G. Heimann (Comptroller of the Currency), that Corporation business required the addition to the agenda for consideration at the meeting, on less than seven days' notice to the public, of two resolutions involving personnel matters.

The Board further determined, by the same majority vote, that no earlier notice of the changes in the subject matter of the meeting was practicable.

Dated: December 8, 1980.

Federal Deposit Insurance Corporation.

Hoyle L. Robinson,

Executive Secretary.

[S-2271-80 Filed 12-9-80; 12:07 pm]

BILLING CODE 6714-01-M

7

FEDERAL ELECTION COMMISSION.

DATE AND TIME: Tuesday, December 16, 1980 at 10 a.m.

PLACE: 1325 K Street NW., Washington, D.C.

STATUS: This meeting will be closed to the public.

MATTERS TO BE CONSIDERED: Personnel. Compliance. Litigation. Audits.

* * * * *

DATE AND TIME: Thursday, December 18, 1980 at 10 a.m.

PLACE: 1325 K Street NW., Washington, D.C. (fifth floor).

STATUS: This meeting will be open to the public.

MATTERS TO BE CONSIDERED:

Setting of dates for future meetings correction and approval of minutes certification
Advisory opinions:
Draft AO 1980-106—James F. Schoener, Faith America
Draft AO 1980-126—James Buckley Ostmann (on behalf of Warren Lewis—Independent Voters for a Republican Victory)
Draft AO 1980-133—Sheldon M. Charone, Counsel, Central States Joint Board International Union of Allied, Novelty & Production Workers, AFL-CIO
Draft AO 1980-134—Charles A. Muessel, Campaign Treasurer, Weicker '82 Committee
Draft AO 1980-135—Charles H. Resnick, Vice President, Raytheon Company
Draft AO 1980-136—William C. Oldaker, Counsel, Kennedy for President Committee
Draft AO 1980-138—Douglas A. Riggs (on behalf of Senator-elect Frank H. Murkowski)
1980 Election and related matters
Appropriations and budget
Pending legislation
Classification actions
Routine administrative matters

* * * * *

PERSON TO CONTACT FOR INFORMATION: Mr. Fred Eiland, Public Information Officer; telephone: 202-523-4065.

Lena L. Stafford,

Acting Secretary of the Commission.

[S-2275-80 Filed 12-9-80; 3:28 pm]

BILLING CODE 6715-01-M

8

FEDERAL ENERGY REGULATORY COMMISSION.

"FEDERAL REGISTER" CITATION OF PREVIOUS ANNOUNCEMENT: (45 FR 80949, December 8, 1980).

PREVIOUSLY ANNOUNCED TIME AND DATE OF MEETING: 10 a.m., December 10, 1980.

CHANGE IN THE MEETING: The following item has been added:

Item Number, Docket Number, and Company

M-6(D): RM79-76, High-Cost Gas Produced from Tight Formations.

Kenneth F. Plumb,

Secretary.

[S-2270-80 Filed 12-9-80; 10:10 am]

BILLING CODE 6450-85-M

9

FEDERAL MARITIME COMMISSION.

"FEDERAL REGISTER" CITATION OF PREVIOUS ANNOUNCEMENT: (45 FR 80951, December 8, 1980).

PREVIOUSLY ANNOUNCED TIME AND DATE OF THE MEETING: 9 a.m., December 10, 1980.

CHANGES IN THE MEETING: Withdrawal of the following item from the open session:

4. Docket No. 80-37: Used Household Goods—Tariff Filing Regulations Applicable to Carriers in the Foreign and Domestic Offshore Commerce of the United States—Comments received in response to notice of proposed rulemaking.

Addition of the following item to the closed session:

2. Contract Marine Carriers, Inc.—Possible Violation of Sections 16, Second, and 18(b)(3), Shipping Act, 1916.

S-2263-80 12-9-80; 9:03 am]

BILLING CODE 6730-01-M

10

FEDERAL RESERVE SYSTEM.

(Board of Governors)

TIME AND DATE: 10 a.m., Tuesday, December 16, 1980.

PLACE: 20th Street and Constitution Avenue NW., Washington, D.C. 20551.

STATUS: Closed.

MATTERS TO BE CONSIDERED:

1. Personnel actions (appointments, promotions, assignments, reassignments, and salary actions) involving individual Federal Reserve System employees.

2. Any agenda items carried forward from a previously announced meeting.

CONTACT PERSON FOR MORE INFORMATION: Mr. Joseph Coyne, Assistant to the Board (202) 452-3204.

Dated: December 8, 1980.

Theodore E. Allison,

Secretary of the Board.

[S-2269 Filed 12-9-80; 9:37 am]

BILLING CODE 6210-01-M

11

NATIONAL MUSEUM SERVICES INSTITUTE.

National Museum Services Board (NMSB)

This notice revises the previous document published in the Federal Register on December 4, 1980 (45 FR 80416). The agenda has been revised to facilitate a more logical discussion of the issues before the Board.

MATTERS TO BE CONSIDERED: The revised agenda is as follows:

December 12:

1. Introduction and Minutes (10:15 to 10:30 a.m.)
2. Director's Report (10:30 to 10:45 a.m.)
3. Administration (10:45 to 11:15 a.m.)
4. Policy Issues and Legislation (11:15 a.m. to 12:30 p.m.)
5. Report of Ad Hoc Committee studying IMS Review Process (1:15 to 4:30 p.m.)

December 13:

6. Executive Session (8:30 to 9:30 a.m.)—Closed to the Public
7. FY 1982 Budget—Multi-year COS (9:45 to 10:15 a.m.)
8. Report of Committee on Renovation (10:15 to 10:45 a.m.)
9. Report on *The Humanities in American Life* (11:00 to 11:15 a.m.)
10. Remarks by Mr. Ward Dworshak of the Textile Museum (11:30 til close)

CONTACT PERSON FOR MORE INFORMATION: Kate Merlino, Executive Secretary, NMSB; Telephone: 426-6577.

Dated: December 8, 1980.

Kate Merlino,

Executive Secretary, National Museum Services Board.

[S-2265-80 Filed 12-8-80; 4:05 pm]

BILLING CODE 4000-01-M

Reader Aids

Federal Register
Vol. 45, No. 240
Thursday, December 11, 1980

INFORMATION AND ASSISTANCE

PUBLICATIONS

Code of Federal Regulations

CFR Unit	202-523-3419 523-3517
General information, index, and finding aids	523-5227
Incorporation by reference	523-4534
Printing schedules and pricing information	523-3419

Federal Register

Corrections	523-5237
Daily Issue Unit	523-5237
General information, index, and finding aids	523-5227
Public Inspection Desk	633-6930
Scheduling of documents	523-3187

Laws

Indexes	523-5282
Law numbers and dates	523-5282 523-5266
Slip law orders (GPO)	275-3030

Presidential Documents

Executive orders and proclamations	523-5233
Public Papers of the President	523-5235
Weekly Compilation of Presidential Documents	523-5235

Privacy Act Compilation	523-3517
United States Government Manual	523-5230

SERVICES

Agency services	523-3408
Automation	523-3408
Dial-a-Reg	
Chicago, Ill.	312-663-0884
Los Angeles, Calif.	213-688-6694
Washington, D.C.	202-523-5022
Magnetic tapes of FR issues and CFR volumes (GPO)	275-2867
Public briefings: "The Federal Register—What It Is and How To Use It"	523-5235
Public Inspection Desk	633-6930
Regulations Writing Seminar	523-5240
Special Projects	523-4534
Subscription orders and problems (GPO)	783-3238
TTY for the deaf	523-5239

FEDERAL REGISTER PAGES AND DATES, DECEMBER

79407-79740.....1
79741-80096.....2
80097-80266.....3
80267-80462.....4
80463-80806.....5
80807-81022.....8
81023-81198.....9
81199-81528.....10
81529-81724.....11

CFR PARTS AFFECTED DURING DECEMBER

At the end of each month, the Office of the Federal Register publishes separately a list of CFR Sections Affected (LSA), which lists parts and sections affected by documents published since the revision date of each title.

1 CFR
51.....79489, 81484

3 CFR
Administrative Orders:
Notice of November 12, 1980.....79407
Memorandum of December 3, 1980.....80465
Executive Orders:
Executive Order of November 24, 1903 (Revoked in part by PLO 5787).....80828
12254.....80463
12255.....80807
Proclamations:
4807.....80809

4 CFR
Ch. III.....79409

5 CFR
Ch XIV.....80467
213.....81023-81029
317.....80467
359.....80467
412.....80468
870.....80472
930.....81029
Proposed Rules:
1.....79846

7 CFR
2.....80477
46.....81529
271.....81030
272.....81030
273.....79741
275.....81030
319.....81530
330.....80267
419.....81531
713.....79743
725.....80477
729.....80479
730.....79745
795.....79746
800.....79736
802.....80985
905.....80269, 81199
907.....80269, 81532
910.....80481
911.....80270
915.....80270
966.....80270
989.....81532
1133.....81199
1421.....81533, 81534
1901.....79747
Proposed Rules:
273.....80790
282.....80804
631.....81210
907.....80117
959.....80533
982.....79818
989.....81058
1135.....79818
1280.....80535
1438.....79492
1942.....81211
2859.....79819

8 CFR
238.....81535

9 CFR
82.....80097, 80813, 81535
92.....80098
Proposed Rules:
308.....79819
381.....79819

10 CFR
1.....80270
30.....79409
40.....79409
50.....79409
70.....79409
72.....80271
73.....79410, 80271
212.....81008
150.....79409, 80271
212.....80482
Proposed Rules:
Ch. I.....79819
50.....79820, 81602
51.....79820
71.....81058
73.....79492, 81060
100.....79820
599.....81012
745.....80830

12 CFR
203.....80813
204.....79748, 81536
205.....79750
211.....81537
262.....81541, 81543
303.....79410
309.....79410
522.....81545
701.....79412, 81032
Proposed Rules:
29.....79493
226.....80648
545.....79493
701.....79494

13 CFR
122.....80483
124.....79413

Proposed Rules:
124 ... 79496, 80117

14 CFR
11 ... 80815
21 ... 80972
23 ... 80972
36 ... 80972
39 ... 79415, 79416, 80271, 81545-81547
71 ... 80272, 81548
75 ... 80273
91 ... 80972
95 ... 81549
97 ... 81554
121 ... 80972
135 ... 80460, 80972
139 ... 80972
322 ... 79750
325 ... 79751
374a ... 80098
385 ... 79752, 80816
Proposed Rules:
21 ... 80434, 80450
23 ... 80450
25 ... 80450
29 ... 80450
39 ... 80434, 80830
43 ... 80450
45 ... 80450
61 ... 80450
63 ... 80450
65 ... 80450
67 ... 80295, 80296
71 ... 80831-80833, 81603
91 ... 80434, 80450
121 ... 80450
129 ... 80450
135 ... 80450
211 ... 80117
215 ... 80117
218 ... 80117
221 ... 80124
294 ... 80117
296 ... 80124
297 ... 80124
300 ... 81604
380 ... 80117
385 ... 80117
399 ... 80117

15 CFR
376 ... 80484
379 ... 80484
Proposed Rules:
1001 ... 81062

16 CFR
13 ... 79753, 81036, 81555
1000 ... 80816
Proposed Rules:
13 ... 80301
441 ... 80307
456 ... 79823, 80833

17 CFR
1 ... 79416, 79753, 80485
3 ... 80485
240 ... 79425, 80834, 81556
241 ... 81558
Proposed Rules:
1 ... 79498, 79831
3 ... 80539
145 ... 80539
147 ... 80539

18 CFR
1 ... 80816
271 ... 80273
282 ... 79427, 80817, 80818
Proposed Rules:
260 ... 81062
271 ... 81063
282 ... 80125, 81211
292 ... 80308, 80551

19 CFR
6 ... 80099
177 ... 80100
201 ... 80275
Proposed Rules:
12 ... 79730
127 ... 79730
212 ... 81605

20 CFR
Ch. I ... 81160
Ch. IV ... 81160
Ch. V ... 81160
Ch. VI ... 81160
Ch. VII ... 81160
208 ... 81064
210 ... 81064
216 ... 81064
217 ... 81064
219 ... 81064
221 ... 81064
230 ... 81064
232 ... 81064
237 ... 81064
238 ... 81064
Proposed Rules:
404 ... 79501
416 ... 79501

21 CFR
102 ... 80497
146 ... 80499
176 ... 80500
510 ... 79757, 81037
522 ... 79757, 81037
548 ... 81038
640 ... 80500
1030 ... 80501
Proposed Rules:
109 ... 79856
110 ... 79856
137 ... 81064
225 ... 79856
226 ... 79856
310 ... 81154
358 ... 80551
500 ... 79856
509 ... 79856
600 ... 81065
606 ... 81065
610 ... 81065
620 ... 81065
630 ... 81065
640 ... 81065
660 ... 81065

22 CFR
3 ... 80818
41 ... 80834, 81560
Proposed Rules:
181 ... 81606

23 CFR
Proposed Rules:
635 ... 80836

24 CFR
201 ... 79427
203 ... 79427
205 ... 79427
207 ... 79427
213 ... 79427
221 ... 79427
234 ... 79427
235 ... 79427
236 ... 79427
241 ... 79427, 80276
244 ... 79427
841 ... 80012
Proposed Rules:
215 ... 80836
241 ... 80836
510 ... 80308
885 ... 80836
3500 ... 80308

25 CFR
233 ... 81560

26 CFR
150 ... 81561
Proposed Rules:
1 ... 80837, 81066
48 ... 80309
51 ... 80551, 80554, 81606
142 ... 80309
144 ... 80309

28 CFR
0 ... 79758, 81201
17 ... 81490
Proposed Rules:
2 ... 81212

29 CFR
1601 ... 81039
2602 ... 80822
Proposed Rules:
Subtitle A ... 81160
Ch. II ... 81160
Ch. IV ... 81160
Ch. V ... 81160
Ch. XVII ... 81160
Ch. XXV ... 81160
452 ... 80555
530 ... 80555
1910 ... 80078

30 CFR
71 ... 80746
75 ... 80501
90 ... 80760
250 ... 81562
920 ... 79431
Proposed Rules:
Ch. I ... 81160
Ch. VII ... 81526
936 ... 80837

32 CFR
1-39 ... 81402
159 ... 79759
286 ... 80502
299a ... 80106
553 ... 80521
700 ... 80277
Proposed Rules:
Ch. I ... 79508
Ch. V-VII ... 79508
Ch. XVI ... 80125

33 CFR
Proposed Rules:
Ch. II ... 79508
117 ... 80839, 81607
162 ... 81607
320 ... 79836
321 ... 79836
322 ... 79836
323 ... 79836
324 ... 79836
325 ... 79836
326 ... 79836
327 ... 79836
328 ... 79836
329 ... 79836
330 ... 79836

34 CFR
240 ... 80988
Proposed Rules:
805 ... 80150

35 CFR
Proposed Rules:
103 ... 80313

36 CFR
1120 ... 80976
1212 ... 81184
Proposed Rules:
Ch. III ... 79508
223 ... 80526

38 CFR
17 ... 80529
36 ... 79802, 79803
Proposed Rules:
21 ... 81068, 81213

39 CFR
111 ... 79804, 81563

40 CFR
22 ... 79808
35 ... 81567
51 ... 80084, 80824
52 ... 79451, 79808, 80279, 80530, 81041
60 ... 79452
62 ... 80826
81 ... 80826
86 ... 81202
120 ... 81042
228 ... 79809, 81042
261 ... 80286
Proposed Rules:
52 ... 79513, 79514, 79836 80314-80316, 80556-80559, 81069, 81070, 81214, 81608
55 ... 79838
81 ... 81070
123 ... 80317-80319
266 ... 80561
401 ... 79692, 81180
423 ... 81070
707 ... 79726
720 ... 81214, 81615
761 ... 80320

41 CFR
5-9 ... 81044
5-10 ... 81045
5A-9 ... 81044
5A-10 ... 81045

5B-10....81045
101-35....81202
101-36....81202
101-37....81202
109-40....80287
Proposed Rules:
Ch. 51....79516
29....81160
60....81160

42 CFR

110....80531
405....79453, 80827
Proposed Rules:
405....79658
420....79658

43 CFR

35....80258
Proposed Rules:
4....81074
4100....79516
Public Land Orders:
2409 (Revoked in part by PLO 5780)....80291
706 (Revoked in part by PLO 5785)....80828
2555 (Amended by PLO 5784)....80827
5747 (Corrected in part by PLO 5782)....80291
5778....80290
5779....80290
5780....80291
5781....80291
5782....80291
5783....80291
5784....80827
5785....80828
5786....80828
5787....80828

44 CFR

64....79810
65....79455, 79456
67....79466-79479, 79810
Proposed Rules:
205....81215

45 CFR

Proposed Rules:
1801....81047
1226....80840

46 CFR

310....81567
Proposed Rules:
10....80843
33....81616
75....81616
78....81616
94....81616
97....81616
108....81616
160....81616
167....81616
192....81616
196....81616

47 CFR

1....79486
15....81568
68....79486
73....81203
90....81204
97....80106
Proposed Rules:
Ch. I....81619
2....79516
13....79518
22....79516
73....79516, 79841, 79842, 80561, 81078-81080, 81215
76....81217

48 CFR

Proposed Rules:
8....79843
38....79843

49 CFR

106....81569
107....81569
171....80829, 81484, 81569
172....81484, 81569
173....81484, 81569
174....81484, 81569
175....81484, 81569
176....81484, 81569
177....81484, 81569
178....81484, 81569
179....81484
301....81573
511....81574
533....81593
1000....80292
1033....79487, 80292
1100....80109, 80110
1108....79810
1111....79488, 79816
1262....81050
Proposed Rules:
172....80843
392....81621
571....81624, 81625
644....79669
1102....81217
1109....80150

50 CFR

20....80293
23....80444
26....80112
33....80114, 80531, 81600
611....81056
661....79817
810....80444
Proposed Rules:
32....81081
285....79844
611....79846, 80845, 81633
671....80847

AGENCY PUBLICATION ON ASSIGNED DAYS OF THE WEEK

The following agencies have agreed to publish all documents on two assigned days of the week (Monday/Thursday or Tuesday/Friday). This is a voluntary program. (See OFR NOTICE FR 32914, August 6, 1976.)

Monday	Tuesday	Wednesday	Thursday	Friday
DOT/SECRETARY	USDA/ASCS		DOT/SECRETARY	USDA/ASCS
DOT/COAST GUARD	USDA/FNS		DOT/COAST GUARD	USDA/FNS
DOT/FAA	USDA/FSQS		DOT/FAA	USDA/FSQS
DOT/FHWA	USDA/REA		DOT/FHWA	USDA/REA
DOT/FRA	MSPB/OPM		DOT/FRA	MSPB/OPM
DOT/NHTSA	LABOR		DOT/NHTSA	LABOR
DOT/RSPA	HHS/FDA		DOT/RSPA	HHS/FDA
DOT/SLSDC			DOT/SLSDC	
DOT/UMTA			DOT/UMTA	
CSA			CSA	

Documents normally scheduled for publication on a day that will be a Federal holiday will be published the next work day following the holiday. Comments on this program are still invited. Comments should be submitted to the Day-of-the-Week Program Coordinator. Office of the Federal Register, National Archives and Records Service, General Services Administration, Washington, D.C. 20408

NOTE: As of September 2, 1980, documents from the Animal and Plant Health Inspection Service, Department of Agriculture, will no longer be assigned to the Tuesday/Friday publication schedule.

REMINDERS

The "reminders" below identify documents that appeared in issues of the **Federal Register** 15 days or more ago. Inclusion or exclusion from this list has no legal significance.

Rules Going Into Effect Today

INTERIOR DEPARTMENT

Land Management Bureau—

75214 11-14-80 / Utah; Partial revocation of stock driveway withdrawal

LABOR DEPARTMENT

Occupational Safety and Health Standards—

60656 9-12-80 / Health and safety standards; fire protection requirements; equipment and training, means of exit, hazardous materials; etc.

List of Public Laws

Last Listing December 10, 1980

This is a continuing listing of public bills from the current session of Congress which have become Federal laws. The text of laws is not published in the Federal Register but may be ordered in individual pamphlet form (referred to as "slip laws") from the Superintendent of Documents, U.S. Government Printing Office, Washington, D.C. 20402 (telephone 202-275-3030).

S. 2352 / Pub. Law 96-508 To increase the authorization for the Council on Wage and Price Stability, to extend the duration of such Council, and for other purposes (Dec. 8, 1980; 94 Stat. 2748) Price $1.

S. 2441 / Pub. Law 96-509 Juvenile Justice Amendments of 1980 (Dec. 8, 1980; 94 Stat. 2750) Price $1.50.