12-31-80
Vol. 45—No. 252
BOOK 1:
Pages
86407-86668

BOOK 2:
Pages
86669-87012

federal register

Book 1 of 2 Books
Wednesday, December 31, 1980

Highlights

Briefings on How To Use the Federal Register—For details on briefings in Washington, D.C., see announcement in the Reader Aids section at the end of this issue.

86672 **Incorporations by Reference** OFR has received requests from several agencies to approve materials incorporated by reference into Titles 1 through 16 of the Code of Federal Regulations; effective 1-1-81 (Part II of this issue)

86872 **Education** ED publishes regulations for the International Education Programs; comments by 3-2-81 (Part VIII of this issue)

86407 **Communications** Administrative Conference of the United States publishes recommendation on intragovernmental communications in informal rulemaking

86605 **Veterans** VA revises program guide for use by various regional offices in development and disposition of claims of veterans alleging exposure to ionizing radiation during service while participating in atmospheric testing of nuclear weapons

CONTINUED INSIDE

Highlights

FEDERAL REGISTER Published daily, Monday through Friday, (not published on Saturdays, Sundays, or on official holidays), by the Office of the Federal Register, National Archives and Records Service, General Services Administration, Washington, D.C. 20408, under the Federal Register Act (49 Stat. 500, as amended; 44 U.S.C. Ch. 15) and the regulations of the Administrative Committee of the Federal Register (1 CFR Ch. I). Distribution is made only by the Superintendent of Documents, U.S. Government Printing Office, Washington, D.C. 20402.

The Federal Register provides a uniform system for making available to the public regulations and legal notices issued by Federal agencies. These include Presidential proclamations and Executive Orders and Federal agency documents having general applicability and legal effect, documents required to be published by Act of Congress and other Federal agency documents of public interest. Documents are on file for public inspection in the Office of the Federal Register the day before they are published, unless earlier filing is requested by the issuing agency.

The Federal Register will be furnished by mail to subscribers, free of postage, for $75.00 per year, or $45.00 for six months, payable in advance. The charge for individual copies is $1.00 for each issue, or $1.00 for each group of pages as actually bound. Remit check or money order, made payable to the Superintendent of Documents, U.S. Government Printing Office, Washington, D.C. 20402.

There are no restrictions on the republication of material appearing in the Federal Register.

Questions and requests for specific information may be directed to the telephone numbers listed under INFORMATION AND ASSISTANCE in the READER AIDS section of this issue.

86812, 86817, 86850 **Foster Care** HHS/HDS/HCFA publishes rules and proposal regarding foster care; effective 12-31-80, comments by 3-16-81 (Part VI of this issue) (3 documents)

86507 **Housing** HHS/SSA publishes proposal regarding coverage and conditions of eligibility in financial assistance programs; comments by 3-2-81

86559 **Continental Shelf** Interior/Sec'y request comments by 2-2-81 on possible revision or reapproval of the 5-year OCS Oil and Gas Leasing Program

86854 **Education** ED publishes regulations regarding student assistance general provisions; comments by 3-2-81 (Part VII of this issue)

86736 **Motor Carriers** ICC publishes eleven documents implementing provisions of the Motor Carrier Act of 1980 (Part V of this issue)

86946 **Air Pollution** EPA sets back effective date until 1-1-83 for all gaseous emissions standards which would otherwise have been effective 1-1-81 for aircraft gas turbine engines (Part XVIII)

Privacy Act Document

86519 BIB
86550 EEOC

86608 **Sunshine Act Meetings**

Separate Parts of This Issue

86672 **Part II, OFR**
86694 **Part III, EPA**
86732 **Part IV, EPA**
86736 **Part V, ICC**
86812 **Part VI, HHS/HDSO/HCFA**
86854 **Part VII, ED**
86872 **Part VIII, ED**
86886 **Part IX, ED**
86890 **Part X, ED**
86894 **Part XI, ED**
86900 **Part XII, ED**
86908 **Part XIII, ED**
86914 **Part XIV, ED**
86922 **Part XV, ED**
86928 **Part XVI, ED**
86932 **Part XVII, ED**
86946 **Part XVIII, EPA**
86950 **Part XIX, OMB**
86966 **Part XX, EPA**
86976 **Part XXI, DOE**
86988 **Part XXII, DOE/WAPA**
87002 **Part XXIII, USDA/AMS**
86008 **Part XXIV, CAB**

Contents

Federal Register
Vol. 45, No. 252
Wednesday, December 31, 1980

Administrative Conference of United States
RULES
Recommendations:
86407 Rulemaking proceedings, informal; intragovernmental communications

Agricultural Marketing Service
RULES
86672 Incorporation by reference, approval. See entry under Federal Register Office.
PROPOSED RULES
Packers and stockyards:
87002 Livestock market agencies and dealers; surety bond requirements, etc.

Agriculture Department
See Agricultural Marketing Service; Animal and Plant Health Inspection Service; Food Safety and Quality Service; Forest Service; Rural Electrification Administration.

Animal and Plant Health Inspection Service
RULES
Animal exports:
86411 Livestock inspection and handling; CFR recodification
86672 Incorporation by reference, approval. See entry under Federal Register Office.
Livestock and poultry disease control:
86410 Communicable diseases; foot-and-mouth, pleuropneumonia, rinderpest, etc.
Livestock and poultry quarantine:
86409 Brucellosis; correction

Civil Aeronautics Board
RULES
Air carriers:
86413 Certificates for domestic flights; removal of restrictions; nonstop authority after December 31, 1980
Organization, functions, and authority delegations:
87010 Tariffs Division Chief; authority to approve and deny applications under new procedures
Tariffs of air carriers and foreign air carriers; construction, publication, etc.:
87008 Domestic passenger fares; pre-filing tariff approval procedures
87010 Special tariff permission; blanket exemption
PROPOSED RULES
Tariffs of air carriers and foreign air carriers; construction, publication, etc.:
87012 Special tariff permission
NOTICES
Hearings, etc.:
86520 Travel agent commissions and competitive marketing of air transportation; reconsideration and show cause order

Coast Guard
RULES
86672 Incorporations by reference, approval. See entry under Federal Register Office.

Commerce Department
See International Trade Administration; National Oceanic and Atmospheric Administration.

Conservation and Solar Energy Office
RULES
86672 Incorporations by reference, approval. See entry under Federal Register Office.
NOTICES
Consumer product test procedures; petition of waiver:
86526 Hydro Therm, Inc.
86527 Norris Industries

Consumer Product Safety Commission
RULES
86672 Incorporations by reference, approval. See entry under Federal Register Office.
86416 Lawn mowers, walk-behind power
Organization and functions:
86415 General Counsel Office, etc.

Defense Department
NOTICES
Meetings:
86524, 86525 Science Board task forces (2 documents)

Drug Enforcement Administration
NOTICES
Schedules of controlled substances:
86581 Dextropropoxyphene; international drug scheduling

Economic Regulatory Administration
RULES
86672 Incorporations by reference, approval. See entry under Federal Register Office.
NOTICES
Natural gas; fuel oil displacement certification applications:
86530 Public Service Electric & Gas Co.
Natural gas exploration and importation petitions:
86528 Brooklyn Union Gas Co.

Education Department
RULES
86872 International education programs; final rule and request for comments
86490 Official seal
86854 Student assistance general provisions; final rules and request for comments
PROPOSED RULES
86932 Cooperative education program
86900 Disadvantaged students special services program
86502 Education Appeal Board, audit findings; expedited proceedings
86894 Educational opportunity centers program
86886 Graduate and professional study institutional grants
86504 International education programs; cross reference
86890 Law school clinical experience program

86928 National graduate fellows program
86922 Special programs staff and leadership personnel training program
86908 Talent search program
86914 Upward bound program
NOTICES
Authority delegations:
86526 Assistant Secretary for Management; records certification
86525 General Counsel et al.; records certification
Meetings:
86525 Postsecondary Education Improvement Fund Board of Advisors

Energy Department
See also Conservation and Solar Energy Office; Economic Regulatory Administration; Energy Information Administration; Energy Research Office; Federal Energy Regulatory Commission; Western Area Power Administration.
RULES
86672 Incorporations by reference, approval. See entry under Federal Register Office
86976 Power and transmission rate adjustments and extensions; public participation procedures

Energy Information Administration
NOTICES
86531 Combustors, large; energy consumption study and survey; 1980 manufacturing industries

Energy Research Office
NOTICES
Meetings:
86531 Energy Research Advisory Board

Environmental Protection Agency
RULES
Air pollution control, aircraft and aircraft engines:
86946 Gas turbine engines, gaseous emissions standards; stay of effective date
Hazardous waste:
86970 Rail transportation requirements; interim rule and request for comments
86968 Standards for generators applicable to owners and operators of treatment storage, and disposal facilities, etc.; interim rule and inquiry
86966 Storage facility permit requirements applicable to transporters, etc.; interim rule and request for comments
Noise abatement programs:
86694 Transportation equipment; motorcycles and motorcycle exhaust systems
Pesticide chemicals in or on raw agricultural commodities; tolerances and exemptions, etc.:
86492 Fenthion
86492 Trifluralin
PROPOSED RULES
Air quality implementation plans; approval and promulgation; various States, etc.:
86506 Pennsylvania
Noise abatement programs:
86732 Transportation equipment; motorcycles and motorcycle exhaust systems; testing requirements
NOTICES
Environmental statements; availability, etc.:
86542 Agency statements; weekly receipts
Pesticides; emergency exemption applications:
86548 Captafol
Toxic and hazardous substances control:
86549 Confidential information and data transfer to contractor
86548 Premanufacture notices review period extensions
Waste management, solid:
86543 Hazardous waste; identification and listing; temporary exclusions and inquiry

Equal Employment Opportunity Commission
NOTICES
86550 Privacy Act; systems of records

Federal Aviation Administration
RULES
86672 Incorporations by reference, approval. See entry under Federal Register Office.

Federal Deposit Insurance Corporation
NOTICES
86608 Meetings; Sunshine Act (2 documents)

Federal Emergency Management Agency
NOTICES
Environmental statements; availability, etc.:
86552 Atlanta, Ga.; relocation of agency personnel

Federal Energy Regulatory Commission
RULES
Natural Gas Policy Act of 1978:
86423 Incremental pricing; State-wide exemptions; order denying rehearing
NOTICES
Hearings, etc.:
86531 Brooklyn Union Gas Co.
Natural Gas Policy Act of 1978:
86532, 86538 Jurisdictional agency determinations (2 documents)

Federal Home Loan Bank Board
PROPOSED RULES
Mortgage loans, federally-related:
86500 State usury laws, preemption; wraparound mortgage loans for purchase of residential real property
NOTICES
Committees; establishment, renewals, terminations, etc.:
86552 Federal Savings and Loan Advisory Council

Federal Labor Relations Authority
NOTICES
86552 Merit pay provisions; coverage and inclusion; interpretation and guidance

Federal Mine Safety and Health Review Commission
NOTICES
86609 Meetings; Sunshine Act

Federal Procurement Policy Office
NOTICES
86955 Contractors; control of management systems and data; proposed policy letter; inquiry
86950 Research and development centers, Federally Funded; proposed policy letter; inquiry
86953 Research and development contracts cost recoupment; proposed policy letter; inquiry

86952 Research and development contracts, cost sharing; proposed policy letter; inquiry

Federal Register Office
RULES
86672 Incorporations by reference, approval.

Federal Reserve System
NOTICES
86609 Meetings; Sunshine Act

Federal Trade Commission
NOTICES
86609 Meetings; Sunshine Act

Fish and Wildlife Service
RULES
86496 Wildlife importation, exportation and transportation; import/export license requirement; exemption for small entities
PROPOSED RULES
86512 National wildlife refuge system; hardrock and placer mining, surface management; adverse environmental impacts
86511 Seizure and forfeiture procedures; posting of notices of proposed forfeiture

Food Safety and Quality Service
RULES
86672 Incorporations by reference, approval. See entry under Federal Register Office.

Forest Service
NOTICES
Environmental statements; availability, etc.:
86519 Carson National Forest, N. Mex.; Western Spruce Budworm management plan

General Services Administration
See also Federal Register Office; National Archives and Records Service.
RULES
Property management:
86493 Accident and fire prevention standards

Health, Education, and Welfare Department
See Education Department; Health and Human Services Department.

Health and Human Services Department
See also Health Care Financing Administration; Human Development Services Office; Public Health Service; Social Security Administration.
NOTICES
Meetings:
86554 Consumer Affairs Council

Health Care Financing Administration
PROPOSED RULES
Medicaid:
86850 Foster care maintenance payments program and adoption assistance program; cash assistance entitlements

Human Development Services Office
RULES
86812 Adoption assistance and child welfare services; title IV-B funds; State eligibility requirements for additional payments; interim rule
PROPOSED RULES
86817 Foster care, adoption assistance, and child welfare services; Federal financial participation

Immigration and Naturalization Service
RULES
86409 Aliens; representation and appearances; clarifying right to representation; correction
Transportation line contracts:
86409 Belize Airways, Ltd.

Interior Department
See also Fish and Wildlife Service; Land Management Bureau; National Park Service; Surface Mining Reclamation and Enforcement Office; Water and Power Resources Service.
NOTICES
86562 Natural Gas Policy Act; implementation for Lowell Historic Preservation Commission
86559 Outer Continental Shelf oil and gas leasing program; revision or reapproval; inquiry

Internal Revenue Service
RULES
Income taxes:
86433 Corporate reorganizations; continuity of business enterprise requirement
86438 Corporations; treatment of interests as stock or indebtedness
86428 Retirement plans; reasonable funding methods

International Broadcasting Board
NOTICES
86519 Privacy Act; systems of records; annual publication

International Trade Administration
NOTICES
86523 Foreign air carriers from customs duties and taxes; exemption request for Kuwait
Steel trigger price mechanism:
86523 Preclearance request

International Trade Commission
NOTICES
Import investigations:
86563 Food slicers and components
86564 Wet motor circulating pumps and components
86609 Meetings; Sunshine Act

Interstate Commerce Commission
RULES
Freight forwarders:
86740 Rates, contract; freight forwarders, and motor common and contract carriers, rail and water carriers
Motor and water carriers, etc.:
86771 Operating authority application procedures
Motor carriers:
86741 Gateway restrictions and circuitous route limitations, elimination
86761 Intercorporate hauling operations; final rule
86747 Operating authorities restrictions removal; property carriers
Tariffs and schedules:
86736 Motor carrier rate bureaus; conforming amendments to CFR
86736 Motor carrier rate bureaus; policy statement

PROPOSED RULES
Tariffs and schedules:
86738 Motor, rail, and water carriers; authority to enter into international joint rates with nonvessel operating common carriers
NOTICES
Motor carriers:
86768 Intercorporate hauling; interpretation, inquiry
86766 Lease of equipment and drivers to private carriers; policy statement, inquiry
86798 Operating authority; acceptable forms of requests; policy statement
86565 Temporary authority applications

Justice Department
See Drug Enforcement Administration; Immigration and Naturalization Service.

Land Management Bureau
RULES
Public land orders:
86495 New Mexico
NOTICES
Meetings:
86555 Elko District Multiple Use Advisory Council
Sale of public lands:
86556 Utah
Survey plat filings:
86556 Nevada
86556 Oregon
Wilderness areas; characteristics, inventories, etc.:
86556 Utah
86558 Utah; correction

Legal Services Corporation
PROPOSED RULES
86511 Funds awarded; restrictions on certain activities (legislative advocacy, etc.)

Management and Budget Office
See Federal Procurement Policy Office.

National Aeronautics and Space Administration
RULES
86414 Reporting procedures for NASA and aerospace related employment; CFR Part removed
NOTICES
Meetings:
86583 Life Sciences Advisory Committee
86582 Space Systems and Technology Advisory Committee

National Archives and Records Service
See also Federal Register Office.
NOTICES
Meetings:
86554 National Archives Advisory Council

National Credit Union Administration
RULES
86676 Incorporations by reference, approval. See entry under Federal Register Office.

National Oceanic and Atmospheric Administration
RULES
Fishery conservation and management:
86497 Foreign fishing; 1981 fee schedule
PROPOSED RULES
Fishery conservation and management:
86518 Atlantic billfish, hearing
NOTICES
Marine mammal permit applications, etc.:
86524 Mate, Dr. Bruce
86524 McLean, Craig N., et al.
86524 Ocean Research & Education Society, Inc.

National Park Service
NOTICES
Environmental statements; availability, etc.:
86558 Capitol Reef National Park; utility corridor, rights-of-way and easements
86558 Guadalupe Mountains National Park, Tex.; master plan supplement
86558 Statue of Liberty National Monument, N.Y./N.J.; general managment planning and meetings

National Science Foundation
NOTICES
86609 Meetings; Sunshine Act

Nuclear Regulatory Commission
RULES
86676 Incorporations by reference, approval. See entry under Federal Register Office.
PROPOSED RULES
Production and utilization facilities, domestic licensing:
86500 Codes and standards for nuclear power plants, inservice inspection; incorporation by reference
NOTICES
Abnormal occurrence reports:
86583 Improper use and inadequate control of licensed material (radiopharmaceuticals)
Applications, etc.:
86584 Commonwealth Edison Co.
86584, 86585 Consumers Power Co. (2 documents)
86585 Illinois Power Co. et al.
86585 Minnesota Mining & Manufacturing Co.
86587 Niagara Mohawk Power Corp. (2 documents)
86588 Superior Industrial X-Ray Co.
86592 Tennessee Valley Authority
86592 Virginia Electric & Power Co.
86587 Regulatory guides; issuance and availability

Oceans and Atmosphere, National Advisory Committee
NOTICES
86582 Meetings

Postal Service
PROPOSED RULES
Domestic mail manual:
86504 Mailable matter; advice to postal customers and decision rendering

Public Health Service
NOTICES
86554 Health maintenance organizations, qualified; list

Railroad Retirement Board
RULES
86423 Milwaukee Railroad restructuring; supplementary unemployment insurance and new career training assistance

Rural Electrification Administration
RULES
86676 Incorporations by reference, approval. See entry under Federal Register Office.

Securities and Exchange Commission
RULES
86422 Life insurance companies, small; quarterly reporting requirements
NOTICES
86593 Consistent disclosure; petition denied
Hearings, etc.:
86593 Alabama Power Co. et al.
86594 American Medical Association Tax-Exempt Income Fund, Inc.
86595 Arkansas Power & Light Co.
86596 Esterline Corp.
86597 First Ecumenical Fund, Inc.
86597 Mosher, Inc., et al.
86600 Narragansett Capital Corp. et al.
86604 NEL Cash Management Account II, Inc.
86604 Ohio Power Co.
Self-regulatory organizations; proposed rule changes:
86603 National Association of Securities Dealers, Inc.

Small Business Administration
RULES
86676 Incorporations by reference, approval. See entry under Federal Register Office.
NOTICES
Applications, etc.:
86605 Merrill, Pickard I

Social Security Administration
PROPOSED RULES
Financial assistance programs:
86507 Housing subsidized by HUD, treatment in eligibility determinations
NOTICES
Social security; foreign insurance or pension systems:
86555 Dominica

Surface Mining Reclamation and Enforcement Office
RULES
Permanent program submission; various States:
86459 New Mexico

Trade Representative, Office of United States
NOTICES
86605 Multilateral trade negotiations (Tokyo Round); government procurement; application acceptance and agreement

Transportation Department
See Coast Guard; Federal Aviation Administration.

Treasury Department
See Internal Revenue Service.

Veterans Administration
NOTICES
86605 Nuclear weapons, atmospheric testing; ionizing radiation exposure claims; program guide

Water and Power Resources Service
RULES
86495 Teton flood victims; sale of replacement farm units

Western Area Power Administration
NOTICES
Power rate adjustments:
86988 Colorado River Storage Project; proposed interim

MEETINGS ANNOUNCED IN THIS ISSUE

DEFENSE DEPARTMENT
Office of the Secretary—
86525 Defense Science Board Task Force on the M-X environmental impact statement, Arlington, Va., 1-14 and 1-15-81

EDUCATION DEPARTMENT
86525 Improvement of Postsecondary Education, Berkeley, Calif., 1-14-80

ENERGY DEPARTMENT
Energy Research Office—
86531 Energy Research Advisory Board, Advanced Conservation Technology Subpanel, Washington, D.C., 1-14-81

GENERAL SERVICES ADMINISTRATION
National Archives and Records Service—
86554 National Archives Advisory Council, Washington, D.C., 1-15 and 1-16-81

HEALTH AND HUMAN SERVICES DEPARTMENT
Office of the Secretary—
86554 Consumer Affairs Council, Washington, D.C., 1-8-81

INTERIOR DEPARTMENT
Land Management Bureau—
86555 Nevada Elko District, Elko, Nev., 2-4-81
National Park Service—
86558 Statue of Liberty National Monument: General Management Planning, various locations, various January 1981 dates

NATIONAL ADVISORY COMMITTEE ON OCEAN AND ATMOSPHERE
86582 Meeting, Washington, D.C., 1-12, 1-13 and 1-14-81

NATIONAL AERONAUTICS AND SPACE ADMINISTRATION
86583 NASA Advisory Council, Life Sciences Advisory Committee, Washington, D.C., 1-16-81
86582 NASA Advisory Council, Space Systems and Technology Advisory Committee, Pasadena, Calif., 1-28, 1-29 and 1-30-81

CHANGED MEETING

DEFENSE DEPARTMENT
Office of the Secretary—
86524 Defense Science Board Task Force on Water in Southwest Asia, Arlington, Va., 1-14 and 1-15 changed to 1-21 and 1-22-81

HEARING

COMMERCE DEPARTMENT
National Oceanic and Atmospheric Administration—
86518 South Atlantic Fishery Management Council, 1-28 and 1-29-81

CONSUMER SUBJECT LISTING

The following items have been identified by the issuing agency as documents of particular consumer interest. This listing highlights the broad subject area of consumer interest followed by the specific subject matter of the document, issuing agency, and document category.

HEALTH AND HUMAN SERVICES
86554 Consumer Affairs Council meeting; Health and Human Services Department; Notices.

CFR PARTS AFFECTED IN THIS ISSUE

A cumulative list of the parts affected this month can be found in the Reader Aids section at the end of this issue.

1 CFR
51 ... 86672
305 ... 86407

7 CFR
28 ... 86673
31 ... 86673
32 ... 86673
201 ... 86673
300 ... 86673
301 ... 86673
331 ... 86673
982 ... 86673
1701 ... 86673
2851 ... 86680
2858 ... 86680

8 CFR
238 ... 86409
292 ... 86409

9 CFR
51 ... 86409
53 ... 86410
77 ... 86680
78 ... 86680
91 ... 86411
113 ... 86680
319 ... 86680
325 ... 86680

Proposed Rules:
201 ... 87002
203 ... 87002

10 CFR
20 ... 86682
35 ... 86680
50 ... 86681
73 ... 86681
110 ... 86682
210 ... 86682
211 ... 86682
212 ... 86682
420 ... 86683
430 ... 86683
436 ... 86684
440 ... 86684
456 ... 86684
475 ... 86687
903 ... 86976

Proposed Rules:
50 ... 86500

12 CFR
701 ... 86687

Proposed Rules:
590 ... 86500

13 CFR
113 ... 86687

14 CFR
23 ... 86688
25 ... 86687
27 ... 86688
29 ... 86687
36 ... 86687
39 ... 86688
91 ... 86687
97 ... 86688
121 ... 86687
127 ... 86687
135 ... 86687
152 ... 86689
203 ... 86413
221 (2 documents) ... 87008, 87010
385 ... 87010
1208 ... 86414

Proposed Rules:
221 ... 87012

16 CFR
1000 ... 86415
1201 ... 86691
1205 ... 86416
1402 ... 86691
1505 ... 86691
1615 ... 86691
1632 ... 86691

17 CFR
229 ... 86422
239 ... 86422

18 CFR
282 ... 86423

20 CFR
397 ... 86423
398 ... 86423

26 CFR
1 (3 documents) ... 86428, 86433, 86438

30 CFR
931 ... 86459

34 CFR
3 ... 86490
655 ... 86872
656 ... 86872
658 ... 86872
660 ... 86872
667 ... 86872
668 ... 86854

Proposed Rules:
78 ... 86502
631 ... 86932
632 ... 86932
633 ... 86932
634 ... 86932
635 ... 86932
639 ... 86890
642 ... 86922
643 ... 86908
644 ... 86894
645 ... 86914
646 ... 86900
648 ... 86886
650 ... 86928
655 ... 86504
656 ... 86504
658 ... 86504
660 ... 86504
667 ... 86504

39 CFR

Proposed Rules:
111 ... 86504

40 CFR
87 ... 86946
122 ... 86966
180 (2 documents) ... 86492
205 ... 86694
262 (2 documents) ... 86968, 86970
263 (2 documents) ... 86966, 86970
264 (3 documents) ... 86966, 86968, 86970
265 (3 documents) ... 86966, 86968, 86970

Proposed Rules:
52 ... 86506
205 ... 86732

41 CFR
101-20 ... 86493

42 CFR

Proposed Rules:
431 ... 86850
435 ... 86850
436 ... 86850

43 CFR
428 ... 86495

Public Land Orders:
3796 (Revoked by PLO 5796) ... 86495
5796 ... 86495

45 CFR
1357 ... 86812

Proposed Rules:
233 ... 86507
1355 ... 86817
1356 ... 86817
1357 ... 86817
1612 ... 86511

46 CFR
31 ... 86692
54 ... 86692
93 ... 86692
167 ... 86692
183 ... 86692

49 CFR
1002 (3 documents) ... 86747, 86761, 86771
1003 ... 86771
1011 ... 86771
1042 ... 86741
1080 ... 86740
1100 ... 86771
1136 ... 86761
1137 ... 86747
1300 ... 86740
1308 ... 86740
1331 (2 documents) ... 86736

Proposed Rules:
1300 ... 86738

50 CFR
14 ... 86496
611 ... 86497

Proposed Rules:
12 ... 86511
29 ... 86512
611 ... 86518
643 ... 86518

Rules and Regulations

Federal Register
Vol. 45, No. 252
Wednesday, December 31, 1980

This section of the FEDERAL REGISTER contains regulatory documents having general applicability and legal effect, most of which are keyed to and codified in the Code of Federal Regulations, which is published under 50 titles pursuant to 44 U.S.C. 1510.
The Code of Federal Regulations is sold by the Superintendent of Documents. Prices of new books are listed in the first FEDERAL REGISTER issue of each month.

ADMINISTRATIVE CONFERENCE OF THE UNITED STATES

1 CFR Part 305

Recommendation on Intragovernmental Communications in Informal Rulemaking

AGENCY: Administrative Conference of the United States.

ACTION: Recommendation.

SUMMARY: The Conference issues Recommendation No. 80-6 concerning intragovernmental communications made to Executive departments and agencies engaged in informal rulemaking proceedings.

DATES: This recommendation was adopted December 12, 1980, and issued December 23, 1980.

FOR FURTHER INFORMATION CONTACT: Charles R. Pouncy, staff attorney, Administrative Conference of the U.S., 2120 L Street, NW., Washington, D.C. 20037, 202-254-7020.

SUPPLEMENTARY INFORMATION: Recommendation 80-6 addresses the question of what are appropriate standards for disclosure of communications made to Executive branch agencies engaged in informal rulemaking by the President and his advisers, as well as by other agencies and administrative bodies. The recommendation urges that the rulemaking agency be free to receive communications containing policy advice and recommendations without being obliged to place such communications in the public file of the proceeding. (However, the recommendation is not intended to suggest any limitation on the agency's discretion to do so.) The recommendation calls on rulemaking agencies to place in the public file communications they receive from elsewhere in the Government containing material factual information, or which reflect comments from persons outside the Government.

This recommendation was adopted at the Twenty-Second Plenary Session of the Conference, pursuant to the Administrative Conference Act, 5 U.S.C. 571-576. It is based on a draft prepared by the Conference's Committee on Agency Decisional Processes, which was published for comment on October 17, 1980 [45 FR 68948], and a study prepared for the Conference by Dean Paul R. Verkuil of the Tulane University School of Law [80 Columbia Law Review 943 (June, 1980)].

The final recommendation differs from the earlier draft in certain respects. A paragraph on the proper focus of judicial review and another paragraph urging inclusion in the public rulemaking file of outside communications sent to a commenting agency were deleted by the Committee after further consideration. References to rulemaking by independent agencies, bracketed in the published draft, were deleted in order to limit the scope of the recommendation to Executive departments and agencies. Language was inserted in the preamble to emphasize the discretion rulemaking agencies possess to place in the public file communications that are not required to be disclosed under the standards set forth in the recommendation. Other minor changes in language were made.

Several members of the Conference who disagree with Recommendation 80-6 have filed a separate statement, which is published immediately following the text of the recommendation in accordance with Section 6(C) of the Bylaws, 1 CFR 302.6(c).

All minutes of the committee in which the recommendation was developed, comments received from the public, and the verbatim transcript of the discussion of this recommendation at the Plenary Session are available for public inspection at the Conference's office, Suite 500, 2120 L Street, NW., Washington, D.C.

1. The table of contents to 1 CFR Part 305 is amended by adding the following new section:

PART 305—RECOMMENDATIONS OF THE ADMINISTRATIVE CONFERENCE OF THE UNITED STATES

* * * * *

Sec.
305.80-6 Intragovernmental Communications in Informal Rulemaking Proceedings [Recommendation No. 80-6].

2. Section 305.80-6 is added to Part 305, as follows:

§ 305.80-6 Intragovernmental communications in informal rulemaking proceedings (recommendation No. 80-6).

(a) The growing complexity and scope of government regulation resulting from informal rulemaking proceedings have increased the importance of communication and coordination among agencies. Because the President, as the nation's Chief Executive, may be deemed accountable for what agencies do, efforts to achieve policy coordination through Presidential channels have become increasingly significant. In recent years the President has attempted to do this through a variety of analytical and procedural mechanisms, such as the promulgation of Executive Order 12044 and establishment of the Regulatory Analysis Review Group and the Regulatory Council. The exercise of Presidential direction has not been limited to the establishment of general mechanisms, however. The President, his advisers, and units of the Executive Office have also on occasion intervened directly in the formation of policy during particular rulemaking proceedings. This intervention has raised questions by private participants about the manner in which executive influence should be exercised.

(b) This recommendation addresses the appropriate standards for communication to Executive departments and agencies from the President, advisers to the President, units of the Executive Office, and other Executive branch and independent agencies when the recipient agency is making policy decisions through the process of informal rulemaking. It pertains to rulemaking of general applicability, not to proceedings (whether rulemaking or adjudication) that involve the distribution, modification or withdrawal of valuable privileges to identifiable private interests. To some degree it is a corollary to ACUS Recommendation 77-3, which is concerned with restrictions upon private participants' oral and written communications in informal rulemaking. The

recommendation is based upon the need to accommodate two competing elements of a good rulemaking process. The first is the desirability of being able to identify a coherent body of factual information upon which the rulemaking agency's decision is based, and to make this information available to all—other participants in the process, the staff of the agency itself, and reviewing courts. The second is the desirability of affording government officials opportunity to engage in uninhibited internal debate over the policy implications of this body of information, subject only to the requirement that the ultimate conclusion be rational and adequately explained. Both principles are recognized in this recommendation. Units of the government other than the one conducting the rulemaking may have perspectives or expertise not readily available to the rulemaking agency that would enhance the quality of internal debate on the implications of the information in the public file, and their participation should be encouraged. At the same time, rulemaking agencies should not permit, and other units of the government should not request, any opportunity to introduce into the proceeding material factual information (as distinct from indications of governmental policy) not made available to other participants.

(c) The Conference is also concerned with avoiding any possibility that intragovernmental communications from outside the rulemaking agency might serve as undisclosed or inadvertent conduits for new material factual information, and with providing adequate opportunities for other participants to respond to material factual information that is introduced.

(d) The recommendation addresses the degree to which agencies should be free to receive certain kinds of intragovernmental communications in informal rulemaking without having a duty to place them in the public file of the proceeding. It is not intended to suggest any limitation on the discretion of any rulemaking agency to disclose such communications to the public.

Recommendation

1. Any Executive department or agency engaged in informal rulemaking in accordance with the procedural requirements of section 553 of the Administrative Procedure Act should be free to receive written or oral policy advice and recommendations at any time from the President, advisers to the President, the Executive Office of the President, and other administrative bodies, without having a duty to place these intragovernmental communications in the public file of the rulemaking proceeding except to the extent called for in paragraph 2.

2. When the rulemaking agency receives communications from the President, advisers to the President, the Executive Office of the President, or other administrative bodies which contain material factual information (as distinct from indications of governmental policy) pertaining to or affecting a proposed rule, the agency should promptly place copies of the documents, or summaries of any oral communications, in the public file of the rulemaking proceeding. All communications from these sources containing or reflecting comments by persons outside the government should be so identified and placed in the public file, regardless of their content. A rulemaking agency should consider the importance of giving public participants adequate opportunity to respond if the material presents new and important issues or creates serious conflicts of data.

3. The Administrative Conference takes no position in the present recommendation concerning rulemaking by other than Executive departments and agencies.

Separate statement of William A. Butler, Peter A. Bradford, Laurence Gold, Charles R. Halpern, Rhoda H. Karpatkin, Alan B. Morrison, Katherine E. Sasseville, and Thomas M. Susman

We oppose this recommendation because we believe that Executive Branch agencies should be encouraged to disclose, not withhold, all of the factors which may have influenced their decisions in informal rulemaking. The public's right to know the reasons for a decision far outweighs agency decisionmakers' rights to secrecy. We have heard no arguments and are aware of none which convince us that putting written material and summaries of oral comments in the public record created during informal rulemaking will inhibit robust debate in that process. This recommendation takes on added importance given the current trend in administrative law away from cumbersome formal adjudications and towards streamlined informal notice and comment rulemaking. Our fear is that this recommendation will invite public cynicism regarding informal administrative rulemaking, and generate contempt for a process where *post hoc* agency rationales carefully selected from the public record are offered as the bases for decisions reached for what may well be quite different, undisclosed and perhaps legally irrelevant reasons. Such a perception of Executive Branch rulemaking will undermine public confidence in the integrity of agency decisionmaking.

This recommendation extends beyond the President and his closest advisors and allows all Executive Branch agencies to involve themselves secretly in informal rulemaking. In our view agencies should be encouraged to provide their views during the public comment period so that the public might respond, or at least be aware of the views expressed. The recommendation actually encourages Executive Branch agencies as well as the White House to wait until the public record is closed before making their views known. At a minimum, we believe a summary of all oral comments and copies of written comments should be placed in the public file as soon as possible, and in no event later than the date when the rule is promulgated.

We also believe that the fact/policy distinction set up by the recommendation is unworkable in practice. "Material factual information" can easily overlap or be intertwined with "policy advice" or "indications of governmental policy." Indeed, agencies often make that precise point in resisting disclosure under the Freedom of Information Act. There will be an inevitable bias in favor of non-disclosure for fear of revealing "policy advice," and there is no means for the public to know that an agency has made a determination that a particular comment will not be disclosed or to seek judicial review of that determination. Further, we do not understand how a recipient agency is to know whether comments from another agency or the White House are ones "containing or reflecting comments from persons outside the government" using their governmental contacts as conduits, or how the recommendation's supposed safeguard in this respect will be policed. We also believe that in any but the most extraordinary circumstances, a rulemaking agency should give public participants "adequate opportunity to respond if the material presents new and important issues or creates serious conflicts of data" and not simply "consider" doing so.

In all likelihood this recommendation will expose agency heads to increased political pressures from either other executive agencies or outside groups who will use those agencies as conduits. Such pressures are likely to include considerations other than those made relevant by the statutes which the particular rulemaking implements. Moreover, the courts will be unable to serve as a check upon consideration of statutorily irrelevant factors since they cannot review that which is not disclosed.

We are not trying to shut off Executive Branch comment, to impose onerous burdens imported from formal adjudications on informal rulemaking, to prolong or delay government

decisionmaking, or to provide procedural opportunities for subsequent litigation. Nor do we doubt that future Presidents must control federal Executive Branch agencies more effectively, and ultimately be held accountable for their actions. The dispute here is over whether the recommendation is a fair, or even a necessary, way to achieve these ends.

We simply do not see the reasons for promoting secrecy. Disclosure is simple and fair. Policies promoting secrecy over disclosure in rulemaking do not constitute good government. Therefore, we dissent.

Dated: December 23, 1980.

Richard K. Berg,

Executive Secretary.

[FR Doc. 80-40687 Filed 12-30-80; 8:45 am]

BILLING CODE 6110-01-M

DEPARTMENT OF JUSTICE

Immigration and Naturalization Service

8 CFR Part 238

Contracts With Transportation Lines; Belize Airways, Ltd.

AGENCY: Immigration and Naturalization Service, Justice.

ACTION: Final rule.

SUMMARY: This amendment to the regulation of the Immigration and Naturalization Service adds a carrier to the list of transportation lines which have entered into agreement with the Commissioner of Immigration and Naturalization to guarantee the passage through the United States in immediate and continuous transit of aliens destined to foreign countries. This amendment is necessary because the transportation lines which have signed such agreements are published in the Service's regulations.

EFFECTIVE DATE: November 26, 1980.

FOR FURTHER INFORMATION, CONTACT: Stanley J. Kieszkiel, Acting Instructions Officer, Immigration and Naturalization Service, 425 Eye Street, NW., Washington, D.C. 20536—Telephone: (202) 633-3048.

SUPPLEMENTARY INFORMATION: This amendment to 8 CFR 238.3 is published pursuant to section 552 of Title 5 of the United States Code [80 Stat. 383], as amended by Pub. L. 93-502 [88 Stat. 1561], and the authority contained in section 103 of the Immigration and Nationality Act (8 U.S.C. 1103), 28 CFR 0.105(b), and 8 CFR 2.1. Compliance with the provisions of section 553 of Title 5 of the United States Code as to notice of proposed rulemaking and delayed effective date is unnecessary because the amendment contained in this order adds a transportation line to the listing and is editorial in nature.

The Commissioner of Immigration Naturalization Service entered into agreement with the following named carrier on the date indicated to guarantee the passage through the United States of aliens in immediate and continuous transit destined to foreign countries under section 238(d) of the Immigration and Nationality Act and 8 CFR 238: BELIZE AIRWAYS, LTD.

Effective date: November 26, 1980.

Accordingly, Chapter I of Title 8 of the Code of Federal Regulations is amended as follows:

PART 238—CONTRACTS WITH TRANSPORTATION LINES

§ 238.3 [Amended]

In § 238.3 *Aliens in immediate and continuous transit,* the listing of transportation lines in paragraph (b) *Signatory lines* is amended by adding in alphabetical sequence, BELIZE AIRWAYS, LTD.

* * * * *

(Secs. 103 and 238(d), 8 U.S.C. 1103 and 1228(d))

Dated: December 22, 1980.

David Crosland,

Acting Commissioner of Immigration and Naturalization.

[FR Doc. 80-40611 Filed 12-30-80; 8:45 am]

BILLING CODE 4410-10-M

8 CFR Part 292

Representation and Appearances; Clarifying Right to Representation

AGENCY: Immigration and Naturalization Service, Justice.

ACTION: Correction to Supplementary Information.

SUMMARY: In Representation and Appearances: Clarifying Right to Representation published in the Federal Register on December 12, 1980, at 45 FR 81732, the Supplementary Information section incorrectly states the conditions under which an alien has the right to representation by an attorney or representative.

EFFECTIVE DATE: January 12, 1981.

FOR FURTHER INFORMATION CONTACT: For general information: Stanley J. Kieszkiel, Acting Instructions Officer, 425 Eye Street, NW, Washington, D.C. 20536, Telephone: (202) 633-3048.

For specific information: Paul W. Schmidt, Deputy General Counsel, Immigration and Naturalization Service, 425 Eye Street, NW, Washington, D.C. 20536, Telephone (202) 633-2895.

SUPPLEMENTARY INFORMATION: In the matter of the Supplementary Information in the above noted final rule published in the Federal Register on December 12, 1980, at 45 FR 81732, the last sentence of the first paragraph incorrectly states in the disjunctive that an alien's right to representation during primary or secondary inspection attaches only if the alien "has become the focus of a criminal investigation or has been taken into custody."

As corrected, the sentence should read:

To avoid possible confusion as to when the right to representation attaches, 8 CFR 292.5(b) is amended to provide that an applicant for admission processing through primary or secondary inspection does not have the right to representation unless the applicant has become the focus of a criminal investigation and has been taken into custody.

Dated: December 22, 1980.

David Crosland,

Acting Commissioner of Immigration and Naturalization.

[FR Doc. 80-40603 Filed 12-30-80; 8:45 am]

BILLING CODE 4410-10-M

DEPARTMENT OF AGRICULTURE

Animal and Plant Health Inspection Service

9 CFR Part 51

Brucellosis Indemnity; Correction

AGENCY: Animal and Plant Health Inspection Service, USDA.

ACTION: Final rule; correction.

SUMMARY: This document corrects the wording in an amendment to the final regulations governing the payment of indemnity for cattle destroyed because of brucellosis. This action is needed to correct an administrative oversight which resulted in the inadvertent deletion of the regulation that provided the time limit requirement for indemnity payments for destruction of cattle because of brucellosis.

EFFECTIVE DATE: December 24, 1980.

FOR FURTHER INFORMATION CONTACT: Dr. A. D. Robb, USDA, APHIS, VS, Federal Building, Room 805, Hyattsville, MD 20782, 301-436-8713.

SUPPLEMENTARY INFORMATION: On June 17, 1980, there was published in the Federal Register (45 FR 40965-40966) a final rulemaking document amending

the brucellosis indemnity regulations in 9 CFR Part 51. Through a proof reading oversight, the action amending Section 51.6 of the regulations governing the payment of indemnity for cattle destroyed because of brucellosis stated that "In § 51.6, Section (c) is amended to read * * *" It should have stated "In § 51.6, Section (c) is amended by deleting all after the first semicolon and inserting the following in lieu thereof * * *"

§ 51.6 [Amended]

In order to correct this error, § 51.6(c) is corrected to read as follows:

* * * * *

(c) *Time limit for destruction of animals.* Payment of indemnity shall be made under this Part only if the animals are destroyed within days after the date of identification, pursuant to § 51.5 of the regulations in this part, except that the appropriate Veterinarian in Charge may extend the time limit to 30 days when request for such extension is received from the owner prior to the expiration date of the original 15-day period allowed, or when the animals were sold for slaughter prior to the expiration date of the original 15-day period, and when the Veterinarian in Charge determines that such extension will not adversely affect the Brucellosis Eradication Program; and except further, that the Deputy Administrator shall, upon request in specific cases, extend the time limit beyond the 30-day period when unusual and unforeseen circumstances occur which prevent or hinder the destruction of the animals within the 30-day period, such as, but not limited to, floods, storms, or other Acts of God which are beyond the control of the owner, or when destruction is delayed due to requirements of another Federal Agency.

Done at Washington, D.C., this 24th day of December 1980.

Pierre A. Chaloux,

Deputy Administrator, Veterinary Services.

[FR Doc. 80-40649 Filed 12-30-80; 8:45 am]

BILLING CODE 3410-34-M

---

9 CFR Part 53

Foot-and-Mouth Disease, Pleuropneumonia, Rinderpest, and Certain Other Communicable Diseases of Livestock and Poultry

AGENCY: Animal and Plant Health Inspection Service, USDA.

ACTION: Final rule.

SUMMARY: This document amends the regulations in 9 CFR Part 53 to provide that the Department will not allow claims for indemnity for the destruction of animals or materials which have been moved or handled by the owner thereof or his or its officer, employee or agent, acting within the scope of his or its office, employment or agency, in violation of a law or regulation administered by the Secretary for the prevention of the introduction into or dissemination within the United States of any communicable disease of livestock or poultry for which the animal or material was destroyed, or in violation of a law or regulation for the enforcement of which the Secretary enters or has entered into a cooperative agreement for the control or eradication of such disease. Part 53 presently provides for the payment of Federal indemnity to owners for their animals or materials which have been destroyed to prevent the introduction or spread of certain communicable animal diseases including foot-and-mouth disease, pleuropneumonia and rinderpest, regardless of whether such laws or regulations have been violated by them or their officers, employees or agents. The purpose of this amendment is to discourage the movement or use of animals and materials in violation of various laws or regulations administered by the Secretary or by States to prevent the introduction or spread of communicable diseases of livestock or poultry.

DATES: Effective date: December 31, 1980. Comments must be received on or before: March 2, 1981.

ADDRESS: Written comments to Deputy Administrator, USDA, APHIS, VS, Federal Building, Room 748, Hyattsville, MD 20782.

FOR FURTHER INFORMATION CONTACT: Dr. C. G. Mason, APHIS, Emergency Programs, Room 748, Federal Building, 6505 Belcrest Road, Hyattsville, MD 20782, 301-436-8073.

SUPPLEMENTARY INFORMATION: This final action has been reviewed under procedures established in Secretary's Memorandum 1955 to implement Executive Order 12044, and has been classified as "not significant". The emergency nature of this action warrants publication of this final action without completion of a Final Impact Statement. A Final Impact Statement will be developed after public comments have been received.

Dr. J. C. Jefferies, Acting Assistant Deputy Administrator, Animal Health Programs, Veterinary Services, Animal and Plant Health Inspection Service, has determined that an emergency situation exists which warrants the publication of this final rule without opportunity for a public comment period on this action because the Department is not able to predict when an outbreak of a disease not endemic to the United States may occur in the United States, thus creating the possibility that the Department would have to pay indemnity to persons who have violated certain statutes and regulations intended to prevent such an outbreak.

Further, pursuant to the administrative procedure provisions in 5 U.S.C. 553, it is found upon good cause that notice and other public procedure with respect to this emergency final action are impracticable and contrary to the public interest; and good cause is found for making this emergency final action effective less than 30 days after publication of this document in the Federal Register. Comments have been solicited for 60 days after publication of this document, and this emergency final action will be scheduled for review so that a final document discussing comments received and any amendments required can be published in the Federal Register as soon as possible.

The Secretary of Agriculture, pursuant to the provisions of section 2 of the Act of February 2, 1903, as amended (21 U.S.C. 111), is authorized to make such regulations and take such measures as he may deem proper to prevent the introduction or dissemination of the contagion of any contagious, infectious, or communicable disease of animals or poultry from any foreign country into the United States or from one State or Territory of the United States or the District of Columbia to another. These measures include authority to seize and dispose of certain materials or animal products whenever, in his judgment, such action is advisable to guard against the introduction or spread of such contagion. Further, the Secretary of Agriculture, pursuant to the provisions of section 11 of the Act of May 29, 1884, as amended (21 U.S.C. 114a), is authorized to cooperate with the States to control and eradicate any communicable disease of livestock or poultry, including the payment of claims growing out of the destruction of animals and materials affected by or exposed to any such disease in accordance with such regulations as the Secretary may prescribe.

The Department in reliance on this authority, has promulgated regulations (9 CFR Part 53) regarding the payment of indemnities for animals and materials destroyed because of the existence of foot-and-mouth disease, pleuropneumonia, rinderpest, and certain other communicable diseases of

livestock and poultry. This document amends 9 CFR Part 53, "Foot-and Mouth-Disease, Rinderpest, Pleuropneumonia, and Certain Other Communicable Diseases of Livestock and Poultry," to provide that the Department will not allow claims for indemnity for the destruction and disposal of animals and materials which have been moved or handled by the owner thereof, or his or its officer, employee or agent, acting within the scope of his or its office, employment of agency, in violation of a law or regulation administered by the Secretary for the prevention of the introduction or dissemination within the United States of any communicable disease of livestock or poultry for which the animal or material was destroyed, or in violation of a law or regulation for the enforcement of which the Secretary has entered into a cooperative agreement for the control or eradication of such disease.

"Disease," as used in the regulations, is defined in 9 CFR 53.1 to mean, in pertinent part, "foot-and-mouth disease, rinderpest, contagious pleuropneumonia, or any other communicable disease of livestock or poultry, which in the opinion of the Secretary constitutes an emergency and threatens the livestock industry of the country; or any other communicable disease of livestock or poultry referred to in this paragraph * * *" The term "State" refers to any State, the District of Columbia, and any territory or possession of the United States which has entered into a cooperative agreement with the Department in connection with the control and eradication of diseases referred to in 9 CFR Part 53.

The Department has found that claims for indemnity have been made on animals or materials destroyed because they were found to be infected or exposed to a communicable disease referred to in 9 CFR Part 53, although the owner thereof, or his or its officer, employee, or agent had violated Federal or State laws or regulations intended to prevent the dissemination of such disease. Allowing indemnity claims in such situations undermines the effectiveness of the Department's efforts to prevent the introduction and spread of communicable diseases of livestock and poultry by rewarding a claimant for violating laws and regulations designed to prevent the animal and materials from becoming contaminated. Allowing such claims is contrary to Departmental polices.

Accordingly, Part 53, Title 9, Code of Federal regulations, is amended in the following respect:

In § 53.10 new paragraph (d) is added to read:

§ 53.10 Claims not allowed.

* * * * *

(d) The Department will not allow claims arising out of the destruction of animals or materials which have been moved or handled by the owner thereof or its officer, employee, or agent, acting within the scope of his or its office, employment or agency, in violation of a law or regulation administered by the Secretary for the prevention of the introduction into or the dissemination within the United States of any communicable disease of livestock or poultry for which the animal or material was destroyed, or in violation of a law or regulation for the enforcement of which the Secretary enters or has entered into a cooperative agreement for the control and eradication of such disease.

(Section 2, 32 Stat. 792, and Sec. 11, 23 Stat. 32, as amended (21 U.S.C. 111, 114a)).

All written submissions made pursuant to this amendment will be made available for public inspection at the Federal Building, 6505 Belcrest Road, Room 748, Hyattsville, MD, during regular hours of business (8 a.m. to 4:30 p.m., Monday to Friday, except holidays) in a manner convenient to the public business (7 CFR 1.27(b)).

Comments submitted should bear a reference to the date and page number of this issue in the Federal Register.

Done at Washington, D.C., this 24th day of December 1980.

Pierre A. Chaloux,

Deputy Administrator, Veterinary Services.

[FR Doc. 80-40632 Filed 12-30-80; 8:45 am]

BILLING CODE 3410-34-M

---

9 CFR Part 91

Inspection and Handling of Livestock for Exportation: Recodification

AGENCY: Animal and Plant Health Inspection Service, USDA.

ACTION: Final rule.

SUMMARY: 9 CFR Part 91 on inspection and handling of livestock for exportation is recodified to reflect a rearrangement and renumbering of the sections and subsections without substantive change. This action is necessary to reduce editorial confusion and to provide room for future substantive changes.

EFFECTIVE DATE: December 31, 1980.

FOR FURTHER INFORMATION CONTACT: Dr. H. A. Waters, USDA, APHIS, VS, Room 826, Federal Building, 6505 Belcrest Road, Hyattsville, MD 20782, 301-436-8383.

SUPPLEMENTARY INFORMATION: This final action has been reviewed under USDA procedures established in Secretary's Memorandum 1955 to implement Executive Order 12044.

Dr. M. J. Tillery, Director, National Program Planning Staffs, VS, APHIS, USDA, has made the determination that since this rule relates to agency management it is exempt from the provisions of Executive Order 12044, Improving Government Regulations, and, thus, does not require the preparation of a regulatory impact analysis.

Further, these amendments are non-substantive in nature and relate to agency management, and pursuant to 5 U.S.C. 553, it is found upon good cause that notice and other public procedures with respect thereto are unnecessary and contrary to the public interest, and good cause is found for making these amendments effective less than 30 days after publication in the Federal Register.

The Animal and Plant Health Inspection Service (APHIS) is engaged in revising its regulations in 9 CFR Part 91 concerning inspection and handling of livestock for exportation. This revision is being carried out in two stages. The first stage is a rearrangement and renumbering of current regulations. The second stage will include substantive changes in the regulations.

The recodification and renumbering, which is accomplished by this document, is necessary to reduce editorial confusion, to arrange the regulations in an orderly fashion, and to provide space for future substantive changes.

The following table shows the relationship of the former CFR section numbers under Part 91 and their redesignations.

Old section	*New section*
91.1	91.1
91.2	91.2
91.3	91.14
91.4	91.3
91.5(a)	91.5
91.5(b)	91.6 (goats)
91.5(b)	91.8 (sheep)
91.5(c)	91.9
91.6	91.15
91.7	91.16
91.8	91.17
91.9	91.25
91.10	91.19
91.11	91.20
91.12	91.22
91.13	91.21
91.14	91.24
91.15	91.23(b)
91.16	91.23(a)
91.17	91.20
91.18	91.28(a)
91.19	91.27
91.20	91.29

Old section	New section
91.21	91.28(a)
91.22	91.18(b)
91.23	91.28(c)
91.24	91.28(d)
91.25	91.28(e)
91.26	91.28(f)
91.27	91.26(b)
91.28	91.26(c)
91.29	91.28(g)
91.30	91.28(h)
91.31	91.28(i)
91.32	91.28(j)
91.33	91.18
91.34	91.4

Accordingly, 9 CFR Part 91 is recodified in the following respects:

1. A revised index is provided to read:

Subpart A—General Provisions

Sec.

91.1 Definitions.
91.2 Animals to be handled in compliance with regulations.
91.3 General export requirements.
91.4 Other movements and conditions.

Subpart B—Diagnostic Tests, Treatments

91.5 Cattle.
91.6 Goats.
91.7 [Reserved]
91.8 Sheep.
91.9 Swine.
91.10 [Reserved]
91.11 [Reserved]
91.12 [Reserved]
91.13 [Reserved]

Subpart C—Ports of Embarkation, Facilities; Health Certification

91.14 Ports of embarkation and export inspection facilities.
91.15 Inspection of animals for export.
91.16 Certification of animals for export.

Subpart D—Inspection of Vessels and Accommodations

91.17 Accommodations for humane treatment of animals on ocean vessels.
91.18 Cleaning and disinfection of transport carriers for export.
91.19 Inspection of ocean vessels prior to loading.
91.20 General construction.
91.21 Ventilation.
91.22 Protection from heat of boilers and engines.
91.23 Doors and ramps.
91.24 Attendants.
91.25 Space requirements for animals on ocean vessels.
91.26 Flooring.
91.27 Troughs and hayracks.
91.28 Rails and stanchions.
91.29 Hatches.
91.30 Defective fittings.

Authority: 21 U.S.C. 105, 112, 113, 114a, 120, 121, 134b, 134f, 612, 613, 614, 618; 46 U.S.C. 466a, 466b, unless otherwise noted.

2. A new subpart A and title is added before § 91.1 to read:

Subpart A—General Provisions

§ 91.4 [Redesignated as § 91.3]

3. Section 91.4 is redesignated § 91.3, and is amended by changing the reference to "sections 91.5(a) (1) and (2), 91.5(b), and 91.5(c)" in paragraph (b) to read "sections 91.5 (a) and (b), 91.6(a) (1) and (2), and 91.9(a)" and reference to "91.5" in paragraph (c) to read "Section 91.5–91.13". Footnote 3 is redesignated footnote 2, and the reference to that footnote in paragraph (c) is changed from "3" to "2".

§ 91.34 [Redesignated as § 91.4]

4. Section 91.34 is redesignated § 91.4.

5. A new subpart B and title are added before § 91.5 to read:

Subpart B—Diagnostic Tests, Treatments

6. Section 91.5 is redesignated §§ 91.5 to 91.13 and is amended to read as follows:

§ 91.5 Cattle.

In order to be eligible for export, cattle shall be tested with results as specified in this section, and the origin health certificate shall specify the type of tests conducted, the dates of the tests, and the results of the tests.

(a) *Tuberculosis.* All cattle over one month of age shall be negative to a caudal intradermal tuberculin test using 0.1 ml. of tuberculin with a reading obtained 72 hours (plus or minus six hours) after injection as prescribed in Veterinary Services Memorandum 552.15 "Instructions and Procedures for Conducting Tuberculin Tests in Cattle," section VIII A.[3]

(b) *Brucellosis.* All cattle over six months of age shall be negative to a test for brucellosis conducted as prescribed in "Standard Agglutination Test Procedures for the Diagnosis of Brucellosis" [4] or "Supplemental Test procedures for the Diagnosis of Brucellosis"; [4] except, that such tests are not required for official vaccinates of dairy breeds under 20 months of age, official vaccinates of beef breeds under 24 months of age, or steers and spayed heifers.

(c) *Treatment for ectoparasites.* All cattle, except those found free of ectoparasites or those intended for exportation for slaughter purposes to any foreign country shall be treated for ectoparasites within 30 days preceding the date of export. Such treatment shall be made using a pesticide registered by the Environmental Protection Agency for use in treating animals infested with the ectoparasite involved in accordance with the label requirements. Treatment shall be personally supervised and certified on the origin health certificate by an accredited veterinarian who shall be ready to apply an antidote if adverse side effects occur following treatment.

§ 91.6 Goats.

(a) In order to be eligible for export, goats shall be tested with results as specified in this section, and the origin health certificate for such animals shall specify the type of test conducted, the date of the tests, and the results of the tests.

(1) *Tuberculosis.* All goats over 1 month of age shall be negative to a caudal intradermal tuberculin test using 0.1 ml. of tuberculin with a reading obtained 72 hours (plus or minus 6 hours) after injection as prescribed in Veterinary Services Memorandum 552.15.

(2) *Brucellosis.* Dairy and breeding goats shall be negative to a plate or tube agglutination test for brucellosis as prescribed in "Standard Agglutination Test Procedures for the Diagnosis of Brucellosis." [3]

(3) No goat shall be exported if it is affected with or exposed to scrapie, or originated from, or has been on, any premises which then were infected or source flock premises,[4] or if it is the progeny, sire or dam, or a full or half brother or sister of any animal found to be affected with scrapie, or was moved from premises located in an area quarantined for scrapie.

(4) Goats exported for immediate slaughter need not comply with the requirements of paragraphs (a)(1), (2), (3), and (5) of this section.

(5) All goats intended for export shall be identified by eartags or tattoos approved by the Deputy Administrator,[5] except that goats for export to Canada or Mexico for immediate slaughter may be identified by flock brands.

§ 91.7 [Reserved]

§ 91.8 Sheep.

(a) No sheep shall be exported if it is affected with or exposed to scrapie, or originated from, or has been on, any premises which then were infected or source flock premises,[4] or if it is the progeny, sire or dam, or a full or half brother or sister of any animal found to be affected with scrapie, or was moved

[3] Copies of this publication may be obtained from the Deputy Administrator, Veterinary Services, Animal and Plant Health Inspection Service, Hyattsville, Maryland 20782.

[4] Infected premises are those on which an animal has been found to be infected with scrapie. Source flock premises are those from which an affected animal was moved within 18 months or less prior to showing signs of scrapie.

from premises located in an area quarantined for scrapie.

(1) Sheep exported for immediate slaughter need not comply with the requirements of paragraph (2) of this section.

(2) All sheep intended for export shall be identified by eartags or tattoos approved by the Deputy Administrator.[5] except that sheep for export to Canada or Mexico for immediate slaughter may be identified by flock brands.

§ 91.9 Swine.

(a) No swine shall be exported if they were fed garbage at any time. The swine shall be accompanied by a certification from the owner stating that they were not fed garbage, and that any additions to the herd made within the 30 days immediately preceding the export shipment, have been maintained isolated from the swine to be exported. All breeding swine shall be tested for and show negative test results to brucellosis by a test prescribed in "Standard Agglutination Test Procedures for the Diagnosis of Brucellosis"[3] or "Supplemental Test Procedures for the Diagnosis of Brucellosis".[3] The test results shall be classified negative in accordance with the provisions prescribed in the Recommended Brucellosis Eradication Uniform Methods and Rules, Chapter 2, Part II, G, 1, 2, and 3.[1]

§§ 91.10–91.13 [Reserved]

7. A new subpart C and title are added before § 91.14 to read:

Subpart C—Ports of Embarkation, Facilities, Health Certification

§ 91.3 [Redesignated as § 91.14]

8. Section 91.3 is redesignated § 91.14, the reference to "section 91.3(a)" in paragraph (b) is amended to read "Section 91.14(a)", the reference to "section 91.9(b)" in paragraph (c)(2) is amended to read "section 91.25(b)", and footnote 2 is redesignated footnote 6, and the reference to that footnote in paragraph (a)(1)(ii) is changed from "2" to "6"

§ 91.6 [Redesignated as § 91.15]

9. Section 91.6 is redesignated § 91.15.

§ 91.7 [Redesignated as 91.16]

10. Section 91.7 is redesignated § 91.16.

[5] Information concerning eartags or tattoos approved by the Deputy Administrator may be obtained, upon request, from the Deputy Administrator, Animal and Plant Health Inspection Service, United States Department of Agriculture, Hyattsville, Maryland 20782.

[1] See footnote 1 to § 91.1.

11. A new Subpart D and title are added before § 91.17 to read:

Subpart D—Inspection of Vessels and Accommodations

§ 91.8 [Redesignated as § 91.17]

12. Section 91.8 is redesignated § 91.17.

§ 91.33 [Redesignated as § 91.18]

13. Section 91.33 is redesignated § 91.18, the reference therein to footnote "9" is changed to footnote "7", and footnote 9 is redesignated footnote 7.

§ 91.10 [Redesignated as § 91.19]

14. Section 91.10 is redesignated § 91.19

§ 91.11 [Redesignated as § 91.20]

15. Section 91.11 is redesignated § 91.20.

§ 91.13 [Redesignated as § 91.21]

16. Section 91.13 is redesignated § 91.21.

§ 91.12 [Redesignated as § 91.22]

17. Section 91.12 is redesignated § 91.22

§ 91.16 [Redesignated as § 91.23]

18. Section 91.16 is redesignated § 91.23(a).

§ 91.15 [Redesignated as § 91.23]

19. Section 91.15 is redesignated § 91.23(b).

§ 91.14 [Redesignated as § 91.24]

20. Section 91.14 is redesignated § 91.24.

§ 91.9 [Redesignated as § 91.25]

21. Section 91.9 is redesignated § 91.25, footnote 7 is redesignated footnote 9, and the reference therein to that footnote is changed from "7" to "9".

§§ 91.18, 91.27, 91.28 [Redesignated as § 91.26]

22. Section 91.18 is redesignated § 91.26(a). Sections 91.27 and 91.28 are redesignated § 91.26 (b) and (c) respectively, and individual paragraphs within the new subsections are redesignated (1), (2), et seq., respectively.

§ 91.19 [Redesignated as § 91.27]

23. Section 91.19 is redesignated § 91.27.

§§ 91.21–91.26, 91.29–91.32 [Redesignated as § 91.28]

24. Sections 91.21, 91.24, 91.30, 91.31, and 91.32 are redesignated Sections 91.28(a), (d), (h), (i), and (j), respectively, and individual paragraphs within the new subsections are redesignated (1), (2) et seq., respectively. Sections 91.22, 91.23, 91.25, 91.26 and 91.29 are redesignated Sections 91.28(b), (c), (e), (f), and (g), respectively.

§ 91.20 [Redesignated as § 91.29]

25. Section 91.20 is redesignated § 91.29.

§ 91.17 [Redesignated as § 91.30]

26. Section 91.17 is redesignated § 91.30.

Done at Washington, D.C., this 23d day of December 1980.

Norvan L. Meyer

Acting Deputy Administrator Veterinary Services.

[FR Doc. 80-40037 Filed 12-30-80; 8:45 am]

BILLING CODE 3410-34-M

CIVIL AERONAUTICS BOARD

14 CFR Part 203

[Regulation ER-1206; Economic Regulations Amendment No. 1 to Part 203; Docket 38783]

Removal of Certificate Restrictions

AGENCY: Civil Aeronautics Board.

ACTION: Final rule.

SUMMARY: The CAB amends its phased restriction removal program to clarify what route authority carriers will receive after December 31, 1980, when all stop restrictions will be eliminated. When a carrier is awarded authority to a new point during 1981, it will receive nonstop authority between the new point and all other points on its system. The rulemaking is at the CAB's initiative.

DATES: Effective: December 24, 1980. Adopted: December 24, 1980.

FOR FURTHER INFORMATION CONTACT: Gerard Boller, Routes Authority Division, Bureau of Domestic Aviation, Civil Aeronautics Board, 1825 Connecticut Avenue, N.W., Washington, D.C. 20428; 202-673-5330.

SUPPLEMENTARY INFORMATION: By ER-1139, 44 FR 49188, August 21, 1979, the Board established a program, contained in a new 14 CFR Part 203, for the gradual elimination of all domestic operating restrictions attached to air carrier certificates, except for restrictions in intra-Alaska and intra-Hawaii markets. The program provides that all stop restrictions are to be removed in a four-step process, which began with the smallest markets on August 21, 1979, and will end with the largest markets on December 31, 1980. Under the Airline Deregulation Act, the Board's authority over domestic passenger routes ends on December 31, 1981.

While Part 203 implements this phased removal of route restrictions, it does not explain what type of authority will be granted in response to applications filed after December 31, 1980. On October 2, 1980, the Board issued a notice of proposed rulemaking (EDR-409, 45 FR 66473, October 7, 1980) to clarify what authority a carrier will receive in 1981 when there will no longer be any stop restrictions. It proposed to state explicity that a carrier awarded a new point in 1981 also will be given unrestricted authority between that point and all other points on its domestic certificate.

On November 17, Trans World Airlines, Inc. filed a comment supporting this proposed rule. It concurred with the Board and noted that since restrictions will be removed on all existing authority after December 31, 1980, they should not be placed on new authority granted after that date.

Also on November 17, Air California filed comments concerning certain implications of our proposal. It stated that the proposed regulation should include an exception for authority involving environmentally sensitive airports, such as Orange County, and for authority granted through the automatic market entry (AME) and dormant authority programs under the Act. The carrier stated that we deferred implementation for certain markets of Phases I and II of the restriction removal program pending completion of an environmental impact statement, and argued that we do the same explicitly here. In addition, it proposed to exclude any route authority granted through AME or dormant authority provisions from the final stage of the restriction removal program on the grounds that Congress intended that any authority granted under these sections be "carefully limited" and not be treated the same as other route authority.

On November 26, Air California filed an amendment to its comments. In that amendment, it reiterated its argument that authority granted through the AME program should be exempted from the proposed rule. It stated that the AME program provides that each carrier may protect one route and argued that this rule, by awarding unrestricted new authority, deprives carriers of this route protection.

On December 8, 1980, the Commuter Airline Association of America (CAAA) filed comments in opposition to Air California's proposals that we exempt environmentally sensitive airports, and AME and dormant certificate authority from our clarification. It stated that the environmental issue "can be handled in less anticompetitive ways." In addition, it contended that AME and dormant authority have been, and should continue to be treated, the same as other certificate authority: "Nothing in the Airline Deregulation Act or the legislative history of the Act shows that Congress intended such certificate authority to be inferior in any respect to other certificate authority."

We share the environmental concerns expressed by Air California. Thus, we will make an exception from the proposed clarification for cases where we believe that there may be potentially significant environmental effects. This exception is consistent with our past policy of withholding additional route authority at those points where we have determined that our responsibility under the National Environmental Policy Act of 1969 and Part 312 of our regulations requires that we undertake an analysis of the environmental impact of increased route authority. We have deferred, and will continue to defer, awards of additional route authority pending environmental analyses at three points: Orange County, California, and West Palm Beach and Sarasota/Bradenton, Florida.[1]

We will not, however, make any exception for authority granted through the AME or dormant authority provisions of the Act. We agree with CAAA's argument that both of these programs were designed primarily to expedite entry and not as a form of market protection. As Air California points out, Congress was very specific in drafting these two programs. Congress did not make any distinction concerning the legal significance of this authority once it has been granted and added to carriers' certificates. Therefore, we will impose no exemptions here based on a theory of Congressional intent. Moreover, we reject Air California's argument that this rule awarding unrestricted new authority contravenes the statutory provision that each carrier have one protected market. This argument is not persuasive since it overlooks the fact that the right to protect one market applies only vis-a-vis another carrier selecting that market under the AME provisions. Section 401(d)(7)(c).

These conclusions are addressed to the question of dormant authority generically. The question of whether this Part should apply to unused authority granted to carriers not previously found fit is a separate issue which we intend to address in another rulemaking proceeding, which will be instituted shortly. Additionally, we note that a substantial change in the scope of a carrier's operations, even if it had previously been found fit, would require the carrier to submit additional fitness data to the Board under Part 204.

Because all operating restrictions are to be removed as of December 31, there is a need to alert carriers to the Board's decision in this rulemaking before that date. For this reason, there is good cause to make the rule effective immediately.

Accordingly, the Civil Aeronautics Board amends 14 CFR Part 203, *Removal of Certificate Restrictions*, as follows:

PART 203 [AMENDED]

1. The authority for Part 203 is:

Authority: Secs. 102, 204, 401, Pub. L. 85-726, as amended, 72 Stat. 740, 743, 754; 49 U.S.C. 1302, 1324, 1371.

2. A new paragraph (f) is added to § 203.3 to read:

§ 203.3 Timetable for automatic removal of restrictions.

* * * * *

(f) After December 31, 1980, any route authority granted by the Board to a carrier will include nonstop authority to all existing points on the carrier's route system, except for those points where new authority has been deferred by Board order pending environmental analysis.

By the Civil Aeronautics Board.

Phyllis T. Kaylor,

Secretary.

[FR Doc. 80-40699 Filed 12-30-80; 8:45 am]

BILLING CODE 6320-01-M

[1] For a discussion of Orange County, *see California-Nevada Low Fare Route Proceeding*, Order 79-4-85, April 12, 1979, and Order 80-5-41, May 7, 1980; for West Palm Beach, *see Palm Beach Environmental Study*, Order 80-2-16, February 5, 1980; and for Sarasota/Bradenton, *see Additional Northwest/Ohio Valley-Florida Show Cause Proceeding*, Order 80-4-127, April 16, 1980.

NATIONAL AERONAUTICS AND SPACE ADMINISTRATION

14 CFR Part 1208

Reporting Procedures for NASA and Aerospace Related Employment

AGENCY: National Aeronautics and Space Administration.

ACTION: Revocation.

SUMMARY: Pub. L. 96-470, the "Congressional Reports Elimination Act of 1980," repealed Section 6(d) of the NASA Authorization Act, 1970, (42 U.S.C. 2462(d), 83 Stat. 199), the so-called Proxmire Amendment, and, therefore, abolishes the report that NASA was required to make annually to Congress on the names, duties and rates of pay of former and current NASA employees who previously or

subsequently worked for aerospace contractors.

EFFECTIVE DATE: October 19, 1980.

FOR FURTHER INFORMATION CONTACT: Mr. John F. Duggan, Chief, Personnel Analysis and Planning Office, Personnel Programs Division, National Aeronautics and Space Administration, Washington, D.C. 20546, telephone (202) 755-3993.

SUPPLEMENTARY INFORMATION: Previous reporting requirements were published in 41 FR 53652, December 8, 1976, as amended at 43 FR 52215, November 9, 1978. Since this action is administrative and editorial in nature, notice and public procedures thereon are not required.

PART 1208 [Reserved]

14 CFR Chapter V is amended by removing and reserving Part 1208.

Robert A. Frosch,

Administrator.

December 22, 1980.

[FR Doc. 80-40612 Filed 12-30-80; 8:45 am]

BILLING CODE 7510-01-M

CONSUMER PRODUCT SAFETY COMMISSION

16 CFR Part 1000

Commission Organization and Functions

AGENCY: Consumer Product Safety Commission.

ACTION: Final rule.

SUMMARY: The Commission is publishing revisions to its statement of organization and functions to reflect organizational changes made since December 31, 1979.

EFFECTIVE DATE: These revisions are effective December 31, 1980.

FOR FURTHER INFORMATION CONTACT: Sadye Dunn, Secretary, Consumer Product Safety Commission, Washington, D.C. 20207, Telephone 202-634-7700.

SUPPLEMENTARY INFORMATION: The Commission is revising its statement of organization and functions, 16 CFR Part 1000, to include changes since the Part was last published on December 31, 1979, 44 FR 77150.

Currently the functions of the Office of the General Counsel are described in section 1000.14 and the functions of the Directorate for Compliance and Enforcement are described in § 1000.27. This notice revises those sections to reflect the fact that the litigation functions of the offices have been realigned. The Office of General Counsel now handles all of the Commission's federal court litigation while the former Directorate for Compliance and Enforcement, now renamed the Directorate for Compliance and Administrative Litigation, handles all of the Commission's administrative litigation.

Also, the functions of the former Directorate for Engineering and Sciences, currently described in § 1000.25, have been divided between two new organizations: the Directorate for engineering Sciences, and the Directorate for Health Sciences. This notice revises § 1000.25 to describe the Directorate for Engineering Sciences and adds § 1000.26, previously reserved, to describe the Directorate for Health Sciences.

Since this amendment deals only with internal agency organization, it is being made effective immediately and comments are not being solicited.

For the foregoing reasons, Part 1000 of Chapter II of Title 16 of the Code of Federal Regulations is amended as shown.

1. The authority citation for Part 1000 reads as follows:

Authority: 5 U.S.C. 552(a).

2. In Part 1000, §§ 1000.14, 1000.25, 1000.26 and 1000.27 are revised to read as follows:

§ 1000.14 Office of the General Counsel.

The Office of the General Counsel provides advice and counsel to the Commissioners and organizational components of the Commission on matters of law arising from operations of the Commission. It prepares the Commission's legislative program and comments on relevant legislative proposals originating elsewhere. The Office in conjunction with the Department of Justice, is responsible for the conduct of all Federal court litigation to which the Commission is a party. The Office also advises the Commission on administrative litigation matters. The Office provides final legal review of and makes recommendations to the Commission on proposed product safety standards, rules, regulations, petition actions, and substantial hazard actions. It also provides legal review of certain procurement, personnel, and administrative actions and drafts documents for publication in the Federal Register.

§ 1000.25 Directorate for Engineering Sciences.

The Associate Executive Director for Engineering Sciences manages the Directorate of Engineering Sciences, which is responsible for developing technical policy and implementing the Commission's engineering programs. The Directorate's functional responsibility includes development and evaluation of product safety standards and test methods based on engineering and other physical sciences and the conduct and relevant evaluation of specific product testing to support general agency regulatory activities. The Directorate develops and evaluates performance criteria, design specifications, and quality control standards for certain consumer products, and provides scientific and technical expertise to the Commission. It conducts and evaluates engineering tests and test-methods, participates in the engineering development of product safety standards, and provides advice on proposed mandatory standards and industry voluntary standard efforts. It performs or monitors research in the engineering sciences including the translation of human factors and engineering factors and provides supervision to the Commission's engineering laboratory and engineering test facility and provides analytical services in support of the Commission's enforcement activities. Engineering conducts studies of the safety of consumer products. It coordinates engineering research testing and evaluation activities with the National Bureau of Standards and other Federal agencies, private industry, and consumer interest groups. The Directorate gives statistical support for the engineering aspects of standards development, certification programs, and sampling for field inspection programs. The Directorate provides technical supervision and direction of all engineering activities including tests and analyses conducted in the field. The Directorate provides engineering technical support to all Commission organizations, activities and programs.

§ 1000.26 Directorate for Health Science.

The Associate Executive Director for Health Sciences manages the Directorate for Health Sciences, which is responsible for management of the Commission's chronic hazards program, development and evaluation of the scientific content of product safety standards and test methods based on the chemical, biological and medical sciences, and the conduct and evaluation of specific product testing to support general agency regulatory activity. The Directorate provides scientific expertise to the Commission and it develops and evaluates performance criteria, design specifications, and quality control standards for certain consumer products. It conducts and evaluates scientific tests and test methods, participates in the scientific development of product safety standards, and provides advice on proposed standards. It collects scientific and technical data, reviews and evaluates toxicological and chemical

hazards, and determines exposure, uptake and metabolism, including identification of the toxicological and psychological bases which cause some population segments to be at special risk. It performs risk assessments for chemical and physical hazards in consumer products. It performs or monitors research, and conducts studies of the safety of or of improving the safety of consumer products. It provides the Commission's primary source of expertise for implementation of the Poison Prevention Packaging Act. It provides the Commission's expertise on manufacturing practices and quality assurance for chemical consumer products and it provides technical supervision to agency field chemistry laboratories and other chemical or toxicological testing facilities. It provides scientific and technical support to all commission organizations, activities, and programs. The Directorate manages the Commission's participation in the Interagency Regulatory Liaison Group and provides technical liaison with the National Toxicological Program, the National Cancer Institute, the Environmental Protection Agency, and other federal programs and organizations concerned with reducing the risks to consumers from exposure to chemical hazards.

§ 1000.27 Directorate for Compliance and Administrative litigation.

The Associate Executive Director for Compliance and Administrative Litigation manages the Directorate for Compliance and Administrative Litigation. The Directorate conducts or supervises the conduct of compliance and administrative enforcement activity under all administered acts, provides advice and guidance to regulated industries on complying with all administered acts and reviews proposed standards and rules with respect to their enforceability. The Directorate's responsibility also includes identifying and acting on safety hazards in consumer products already in distribution, promoting industry compliance with existing safety rules, and conducting litigation before an administrative law judge relative to administrative complaints. It provides advice and case guidance to field offices and participation in the development of standards before their promulgation to assure enforceability of the final product. It enforces the Consumer Product Safety Act requirement that firms identify and report product defects which could present possible substantial hazards. It reviews consumer complaints, in-depth investigations, and other data to identify those consumer products containing such hazards or which do not comply with existing safety requirements. The Directorate negotiates and subsequently monitors corrective action plans designed to recall defective or non-complying products and gives public warning to consumers where appropriate. It gathers information on generic product hazards which may lead to subsequent initiation of safety standard setting procedures. The Directorate develops surveillance strategies and programs designed to assure compliance with Commission standards and regulations. It originates instructions to field offices and provides subsequent interpretations or guidance for field surveillance and enforcement activities.

Dated: December 23, 1980.

Sadye E. Dunn,

Secretary, Consumer Product Safety Commission.

[FR Doc. 80-40673 Filed 12-30-80; 8:45 am]
BILLING CODE 6355-01-M

16 CFR Part 1205

Safety Standard for Walk-Behind Power Lawn Mowers

AGENCY: Consumer Product Safety Commission.

ACTION: Final rule.

SUMMARY: The Commission amends the Safety Standard for Walk-Behind Power Lawn Mowers to conform its provisions to a recent court decision and a recent congressional enactment and to provide a more detailed figure of the label so that is easier to understand. The changes to the Standard are:

a. The separate requirement for a foot probe test of the discharge chute, that is in addition to the requirement for a foot probe test at the rear of the mower, is deleted. Figs. 3, 4, and 5 are amended accordingly.

b. The effective date of the Standard is changed from December 31, 1981, to June 30, 1982.

c. Additional designations for the colors to be used in the prescribed warning label are provided in Fig. 7.

DATES: The amendments to the Standard are effective January 30, 1981. The performance requirements of the Standard apply to certain rotary power lawn mowers manufactured after June 30, 1982. The labeling requirement is currently in effect and applies to both rotary and reel-type mowers manufactured after December 31, 1979.

FOR FURTHER INFORMATION CONTACT: (1) Concerning the enforcement of the Standard: Paul Galvydis, Directorate for Compliance and Administrative Litigation, (301) 492-6400. (2) Concerning the development of the Standard: David Parrish, Office of Program Management, (301) 492-6557. Consumer Product Safety Commission, Washington, D.C. 20207.

SUPPLEMENTARY INFORMATION: On February 15, 1979, the Commission published the Safety Standard for Walk-Behind Power Lawn Mowers, 16 CFR Part 1205 (44 FR 9990). The Standard requires a label warning of the danger of blade contact on both reel-type and rotary walk-behind power lawn mowers. In addition, the Standard contains performance requirements intended to reduce injuries from contact with the rotating blades of rotary power mowers. In order to reduce injuries to the operator's hands and feet, the Standard requires that rotary walk-behind power mowers have a blade control system that will stop the mower blade within 3 seconds after the operator's hands leave the normal operating position. If the manufacturer chooses to stop the blade by stopping the engine, the mower must be equipped with a power start mechanism. If the mower has only manual start, stopping the blade by stopping the engine is not allowed by the Standard. In order to reduce injuries to the operator's feet, the Standard as originally issued also required that if the rear periphery and discharge chute of a mower are probed with a specified foot probe, neither the probe nor any part of the mower shall enter the path of the blade.

A. Foot Probe of the Discharge Chute

Immediately after the Standard was issued, 6 petitioners associated with the lawn mower industry, and 1 consumer, filed petitions for judicial review of the Standard. These petitions were consolidated in the United States Court of Appeals for the Fifth Ciruit.

On June 19, 1980, the Court issued an opinion fully upholding the major provisions of the Standard but vacating the separate requirement that the discharge chute must be tested with the foot probe. *Southland Mower Co. et. al. v. C.P.S.C.*, 619 F.2d 499 (5th Cir. 1980). Accordingly, the version of the Standard printed in the Code of Federal Regulations is being amended to delete the portion of the Standard vacated by the Court. This is accomplished by deleting the words "any discharge opening and" from § 1205.(b)(1)(ii) of the Standard. However, the area required to be probed at the rear of the mower is 60 degrees to the right and 60 degrees to the left of the fore-aft centerline of the cutting width, and this requirement includes probing of any portion of a discharge chute located within this area.

Section 9 of the Consumer Product Safety Act, 15 U.S.C. 2058(c), provides that when consumer product safety rules are issued, the Commission must make certain findings and include these findings in the rule. These findings are as set forth in § 1205.8. The requirement that was vacated by the Court affects so

few injuries and constitutes such a small part of the anticipated cost to manufacturers of mowers complying with the Standard that the specific findings set forth in the rule remain unchanged. However, the reference to probing", plus the discharge chute," in § 1205.8(e)(2) has been deleted.

B. Effective Date

When the Standard was issued, it provided that the requirements other than labeling would become effective after December 31, 1981. However, in the 1980 appropriations bill (Pub. L. 96-526), the Congress delayed the effective date until June 30, 1982. Section 1205.2 of the Standard has been amended accordingly.

C. Warning Label

Figure 7 has been amended to add a specific designation for the white backgrounds for the hand symbol and the word "DANGER". Also, the black border lines around the outside edge of the label have been specifically designated. The Commission believes these designations were inherent in the original label figure, but they are being added at this time in order to simplify the understanding of the label requirements. This interpretation is consistent with the labels generally in use in the industry, and the Commission concludes that this change in the label is an interpretative rule exempt from the requirement for a general notice of proposed rule making under the Administrative Procedure Act, 5 U.S.C. 553(b)(A).

D. Other Considerations

Since the amendments described above merely change the Standard as published in the Code of Federal Regulations to reflect the accomplished actions of the Court and the Congress, or otherwise do not have any substantial impact on the public or the regulated industry, the Commission concludes that the amendments to the Standard described above are not material changes to the Standard. Therefore, as stated in Section 9(e) of the Act, 15 U.S.C. 2058(e), the procedures of Sections 7 and 9(a)-(d) of the Act are not applicable.

The Commission originally issued the warning label under the authority of both Sections 7 (15 U.S.C. 2056) and 27(e) (15 U.S.C. 2076(e)) of the Act. In its opinion on the petitions for review of the Standard, the Court upheld the label requirement under Section 7 of the Act, but indicated that this particular label did not constitute "performance and technical data" that could be required under Section 27(e). However, since the label requirement was upheld by the Court under Section 7, § 1205.8(i)(11) of the Standard, relating to the issuance of the label requirement under Section 27(e), is no longer necessary and has been deleted.

On May 23, 1980, the Outdoor Power Equipment Institute petitioned the Commission for a six month extension of the effective date of the Standard (Petition No. CP 80-6) on the ground that additional testing was needed before complying mowers were introduced in the market. On October 2, 1980, the Commission denied this petition because it did not establish that the industry would be unable to perform adequate testing and incorporate necessary changes before the beginning of the 1981-82 production cycle. Ordinarily, the denial of such a petition would be announced in a separate Federal Register notice detailing the reasons for denial. However, in view of the congressional action extending the effective date, discussed above, an additional Federal Register notice concerning this subject is not necessary.

Section 1205.7 of the Standard is a "stockpiling rule" that prohibits excessive production of noncomplying mowers before the effective date of the Standard. This provision provides that, between the issuance of the standard and its effective date, a manufacturer may not produce noncomplying mowers at a rate that exceeds 120 percent of their rate of production during a 365-day base period selected by the manufacturer between September 1, 1971, and August 31, 1978. Since this provision refers to "the effective date" and not to the particular effective date originally established, § 1205.7 will apply to the period covered by the congressionally enacted extension without the need for any amendment to that section.

Therefore, for the reasons given above, the Commission amends Subpart A of Part 1205, Subchapter B, Chapter II, of Title 16 of the Code of Federal Regulations as follows:

1. The authority citation for Part 1205 is amended to read as follows:

Authority: Secs. 2, 3, 7, 9, 14, 19, Pub. L. 92-573, 86 Stat. 1207, 1208, 1212-1217, 1220, 1224, 15 U.S.C. 2051, 2052, 2058, 2063.

§ 1205.2 [Amended]

2. In § 1205.2, "December 31, 1981" is changed to "June 30, 1982".

§ 1205.4 [Amended]

3. In the third line of § 1205.4(b)(1)(ii), "any discharge opening and" is removed.

§ 1205.8 [Amended]

4. In lines 19 and 20 of § 1205.8(e)(2), ", plus the discharge chute," is removed.

5. The following Figures are substituted for Figs. 3-5 and 7.

BILLING CODE 6355-01-M

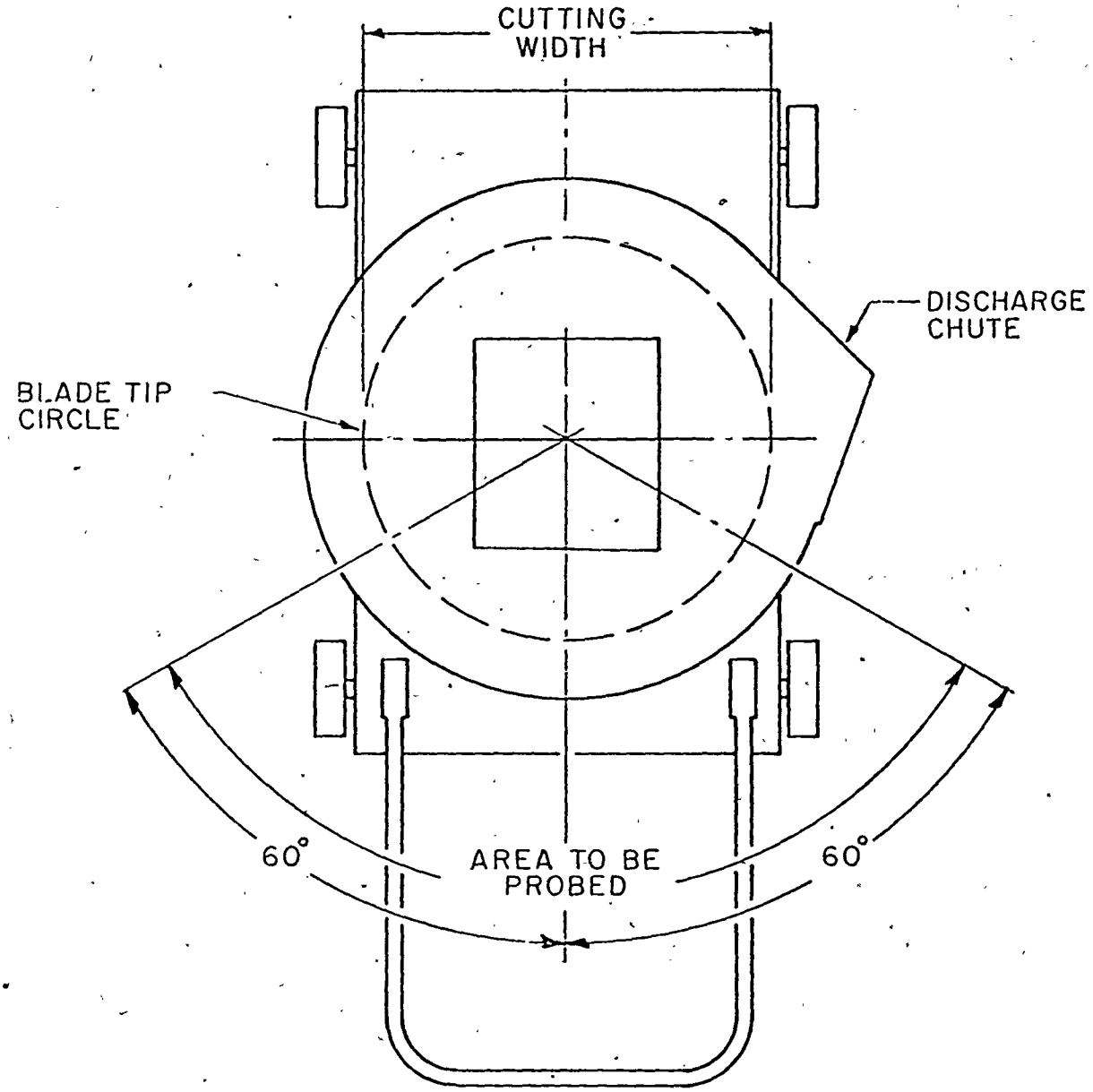

FIGURE 3 - AREA TO BE PROBED

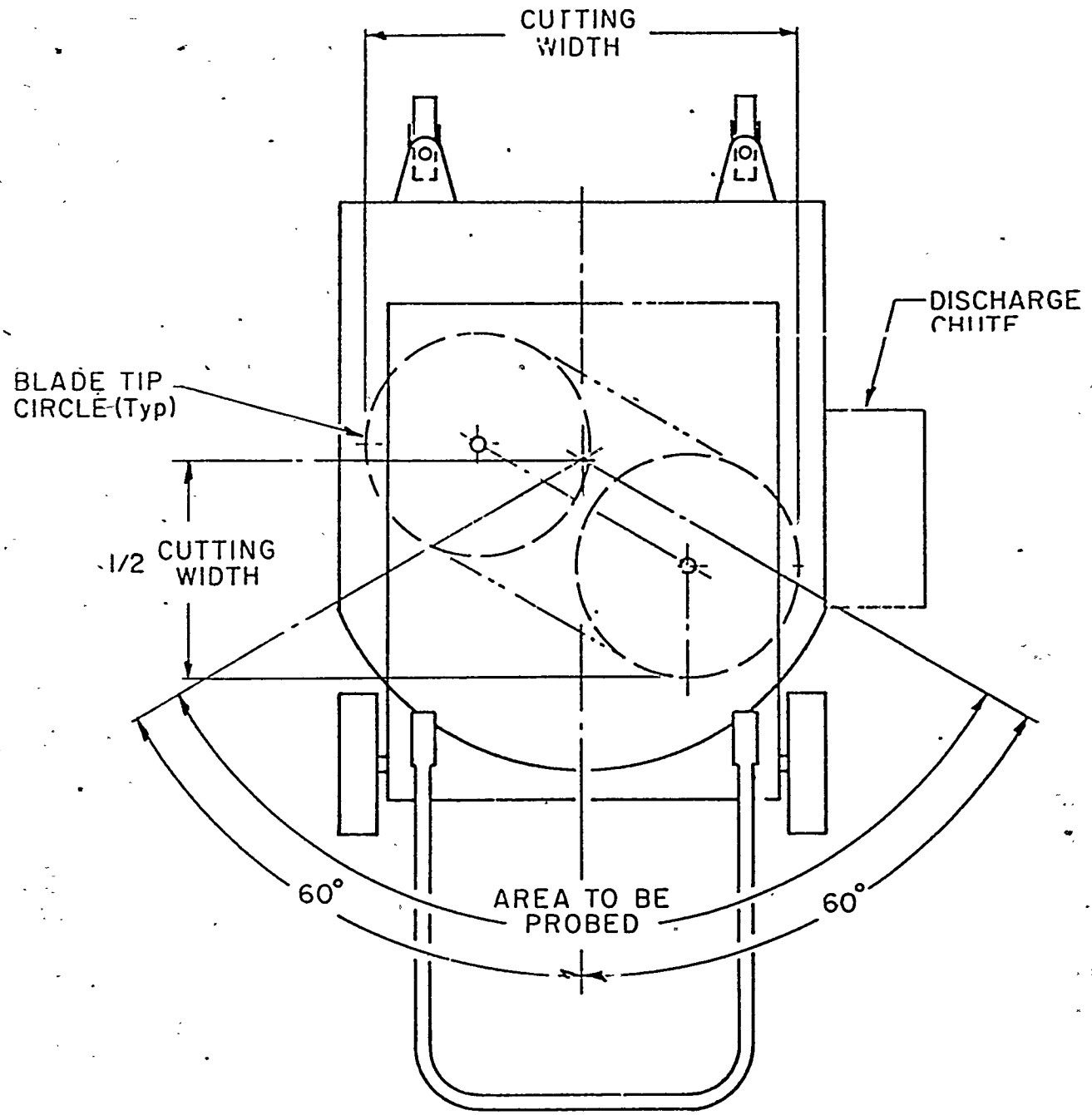

FIGURE 4 - AREA TO BE PROBED MULTI-BLADE MOWERS

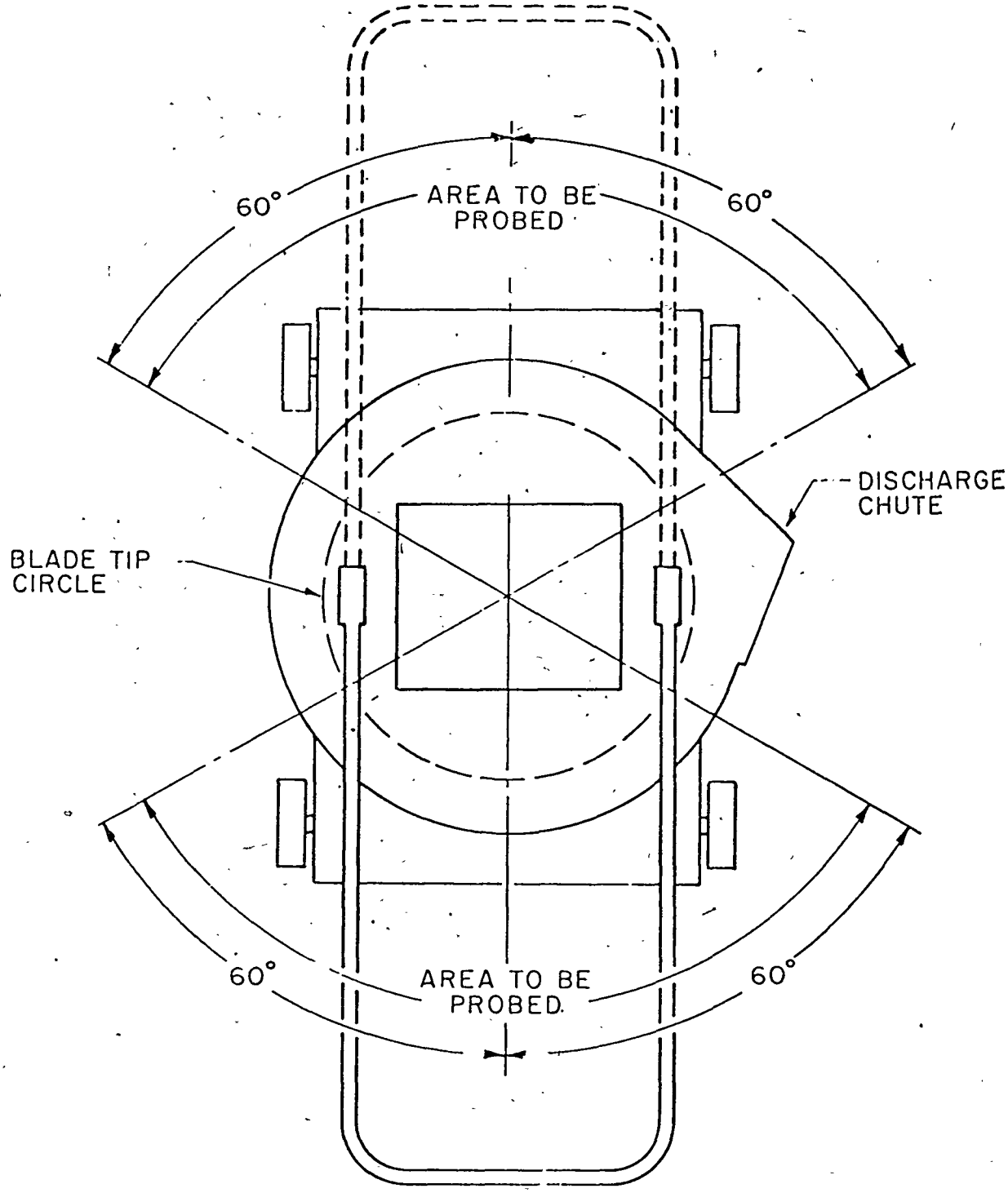

FIGURE 5 - AREA TO BE PROBED SWINGOVER HANDLE

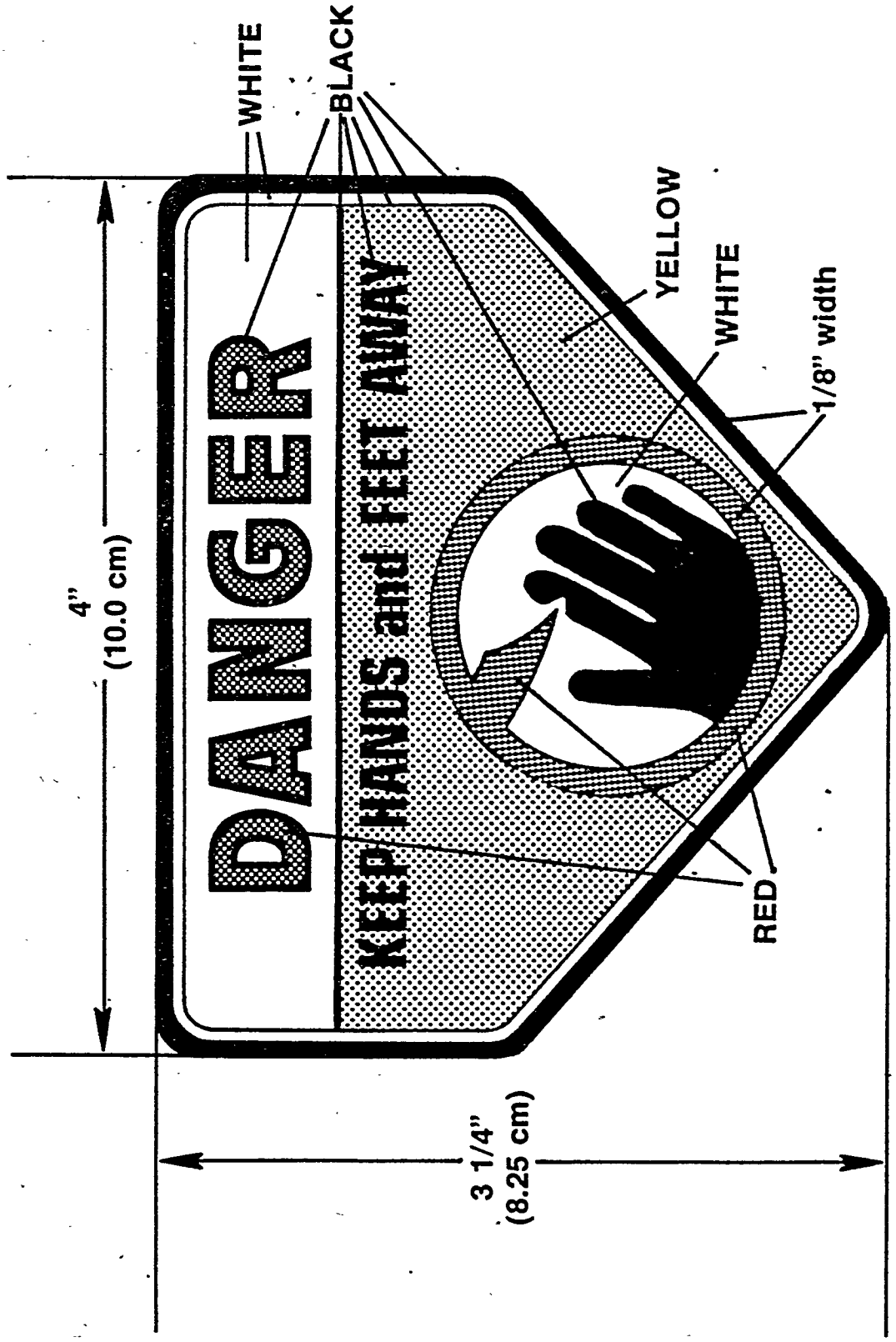

FIGURE 7

BILLING CODE 6355-01-C

§ 1205.8 [Amended]

6. Section 1205.8(i)(11) is removed.

Dated: December 24, 1980.

Sadye E. Dunn,

Secretary, Consumer Product Safety Commission.

[FR Doc. 80-40672 Filed 12-30-80; 8:45 am]

BILLING CODE 6355-01-M

SECURITIES AND EXCHANGE COMMISSION

17 CFR Parts 229 and 239

[Release Nos. 33-6273, 34-17397]

Quarterly Reporting Requirements for Smaller Life Insurance Companies Whose Shares Are Not Actively Traded

AGENCY: Securities and Exchange Commission.

ACTION: Rule amendments.

SUMMARY: The Commission is further deferring, until 1982, the effective date of the quarterly reporting requirements for smaller life insurance companies whose shares are not actively traded. Such additional delay is necessary to allow sufficient time for the Commission to consider establishing a system of classifying small issuers for purposes of modifying certain reporting requirements under the Securities Exchange Act of 1934.

EFFECTIVE DATE: December 31, 1980.

FOR FURTHER INFORMATION CONTACT: Michael J. Eizelman, Office of Small Business Policy, Division of Corporation Finance, Securities and Exchange Commission, 500 North Capitol Street, Washington, D.C. 20549, (202) 272-2644.

SUPPLEMENTARY INFORMATION: On September 20, 1976, the Commission issued Accounting Series Release No. 197 [41 FR 42645] [1] to require quarterly financial reporting, on Form 10-Q, [17 CFR 249.308a] by life insurance companies and holding companies having only life insurance subsidiaries. In that release the Commission stated:

Recognizing that some life insurers do not presently prepare quarterly financial information, the Commission believes that the reporting responsibilities imposed by these amendments should first be applied to those life insurance companies whose activities are most closely followed by analysts and investors. At the same time and taking into account the lead time and start-up requirements for those companies not currently preparing quarterly financial information on a generally accepted accounting principles (GAAP) basis, the Commission has decided to defer the effective date of these amendments until 1978 for life insurance companies whose shares are not actively traded. In addition, the Commission notes that its Advisory Committee on Corporate Disclosure is reviewing the overall question of the reporting responsibilities of smaller companies.

In Accounting Series Release No. 228, October 7, 1977, [42 FR 54531], the Commission further deferred through 1978 the effective date of these requirements. Subsequently, on November 3, 1977, the Commission's Advisory Committee on Corporate Disclosure issued its report which included a recommendation that the Commission hold public hearings to determine: (1) whether and to what extent, the Commission should attempt to define a category of "small companies" for the purpose of requiring less burdensome reporting; (2) how such a classification, if desirable and possible, should be defined; and (3) if definition is possible, what reductions of reporting requirements are possible, consistent with the purposes of the Federal securities laws.

During April and May of 1978 the Commission staff conducted a series of public hearings in several parts of the country at which the problems of small companies were discussed. In Accounting Series No. 259, December 28, 1978 [44 FR 1727], and in Securities Act Release No. 6170, December 19, 1979 [44 FR 76777], the Commission again deferred, through 1980, the effective date of the quarterly reporting requirements for life insurance companies whose shares are not actively traded. The reason for these deferrals was to allow the staff time to review the testimony taken at the hearings to ascertain future policies relating to small companies generally and in particular to consider the development of one or more classes of small issuers for purposes of reducing the reporting requirements under Sections 13 and 15(d) of the Securities Exchange Act of 1934 ("Exchange Act") [15 U.S.C. 78m and 78o(d)]. As a result of these efforts, numerous changes in the Commission's rules and regulations have occurred which impact significantly on small businesses. In Securities Exchange Act Release No. 16886, June 2, 1980 [45 FR 40145], the Commission published advance notice of proposed rulemaking regarding the classification of small issuers which might have different reporting and other obligations under the Exchange Act. The Commission asked commentators to recommend specific criteria to be used to define small issuers and which reporting requirements, if any, might be modified for them. The Commission intends to make specific proposals in this area early by 1981. Such proposals may have a direct impact on smaller life insurance companies. Accordingly, the Commission has decided to further defer from fiscal years ending after December 15, 1981 to years ending after December 20, 1982 the effective date of the quarterly reporting requirements for life insurance companies whose shares are not actively traded.

For the reasons stated above and pursuant to the Administrative Procedure Act (5 U.S.C. 551 et seq.), the Commission finds for good cause that notice and public procedure on these rule amendments are impracticable, unnecessary and contrary to the public interest and that there is good cause for making these amendments effective immediately.

Text of Amendments

The Commission hereby revises paragraphs (c)(1) of §§ 240.13a-13 and 240.15d-13 of 17 CFR Part 240, to defer the effective date specified therein as given below.

PART 240—GENERAL RULES AND REGULATIONS, SECURITIES EXCHANGE ACT OF 1934

§ 240.13a-13 Quarterly reports on Form 10-Q (§ 249.308a of this chapter).

* * * * *

(c) * * *

(1) Life insurance companies and holding companies having only life insurance subsidiaries for quarters in fiscal years ending on or before December 20, 1982, if they do not meet the tests specified in item 12, paragraph (a)(1)(i), of § 229.20; or

* * * * *

§ 240.15d-13 Quarterly reports on Form 10-Q (§ 249.308a of this chapter).

* * * * *

(c) * * *

(1) Life insurance companies and holding companies having only life insurance subsidiaries for quarters in fiscal years ending on or before December 20, 1982, if they do not meet the test specified in item 12, paragraph (a)(1)(i), of § 229.20; or

* * * * *

(Secs. 12, 13, 15(d) and 23(a) (15 U.S.C. 781, 78m, 78o(d) and 78w(a)) of the Securities Exchange Act of 1934)

[1] Certain corrections to that release were made in Accounting Series Release No. 218 [42 FR 27879], May 23, 1977.

By the Commission.
December 22, 1980.
Shirley E. Hollis,
Assistant Secretary.
[FR Doc. 80-40569 Filed 12-30-80; 8:45 am]
BILLING CODE 8010-01-M

DEPARTMENT OF ENERGY

Federal Energy Regulatory Commission

18 CFR Part 282

[Docket No. RM79-47]

Incremental Pricing

Issued: December 22, 1980.

AGENCY: Federal Energy Regulatory Commission.

ACTION: Order denying rehearing.

SUMMARY: On October 21, 1980, the Federal Energy Regulatory Commission (Commission) issued a final rule (Order No. 103) relating to state or local incremental pricing plans and state or local ratemaking plans proposed as alternatives to the Commission's incremental pricing program (45 FR 71781, October 30, 1980). Five petitions for rehearing of Order No. 103 were timely filed. The Commission denies rehearing of Order No. 103, because the arguments raised in the petitions have been fully discussed in Order No. 103.

FOR FURTHER INFORMATION CONTACT: Barbara K. Christin, Office of the General Counsel, Federal Energy Regulatory Commission, 825 North Capitol Street, N.E., Washington, D.C. 20426, (202) 357-8033.

Before Commissioners: Georgiana Sheldon, Acting Chairman; Matthew Holden, Jr., George R. Hall and J. David Hughes. Statewide Exemptions From Incremental Pricing; Order Denying Rehearing.

Issued: December 22, 1980.

On October 21, 1980, the Federal Energy Regulatory Commission (Commission) issued a final rule amending its regulations on incremental pricing (18 CFR Part 282) under Title II of the Natural Gas Policy Act of 1978 (NGPA) (15 U.S.C. 3301-3432). The final rule (Order No. 103, 45 FR 71781, October 30, 1980) added new §§ 282.104 and 282.208 relating to state or local incremental pricing plans and alternative plans and revised § 282.504.

With respect to state or local incremental pricing plans, new § 282.104 recognizes the authority of a state or a local municipality to implement an incremental pricing plan that sets retail rates and charges for natural gas to non-exempt industrial users at, or above, the Commission's alternative fuel price ceilings. Revisions to § 282.504(e)(2) and (3) relieve natural gas suppliers subject to a state or local incremental pricing plan from the reporting requirements set forth in those sections. With respect to state or local alternative plans, new § 282.208 establishes procedures for Commission approval and Congressional review of a state or local ratemaking plan proposed as an alternative to the Commission's incremental pricing program.

Timely petitions for rehearing of Order No. 103 were filed by the Fertilizer Institute, American Paper Institute, American Bakers Association, Glass Containers Corporation, and Glass Packaging Institute. The petitioners objected to the Commission's position, set forth in Order No. 103, that a state has the authority to set the retail rates for natural gas used as boiler fuel by industrial facilities at, or above the Commission's alternative fuel price ceilings.

The arguments raised by petitioners in their applications for rehearing have been fully addressed by the Commission in Order No. 103, and further discussion of those issues here would not be helpful. Accordingly, the Commission denies rehearing of Order No. 103.

The Commission Orders:

The petitions for rehearing of Order No. 103 are denied.

By the Commission.
Lois D. Cashell,
Acting Secretary.
[FR Doc. 80-40559 Filed 12-30-80; 8:45 am]
BILLING CODE 6450-85-M

RAILROAD RETIREMENT BOARD

20 CFR Parts 397 and 398

Milwaukee Railroad Restructuring Act Regulations

AGENCY: Railroad Retirement Board.

ACTION: Final rule.

SUMMARY: A new Subchapter I is established for 20 CFR Chapter II.

On November 4, 1979, the Milwaukee Railroad Restructuring Act, Pub. L. 96-101, 93 Stat. 736, was signed into law. The Act is intended to provide for the orderly restructuring of the Milwaukee Railroad and for the protection of the employees of that railroad.

The Milwaukee Railroad Restructuring Act authorizes the Railroad Retirement Board to administer the payment of Supplementary Unemployment Insurance and New Career Training Assistance benefits. The regulations set out below explain the eligibility requirements for these benefits, describe how and when individuals may file applications for these benefits, and explain the computation of the amount of benefits to be paid.

EFFECTIVE DATE: December 31, 1980.

FOR FURTHER INFORMATION CONTACT: Sally Marn, Bureau of Unemployment and Sickness Insurance, Railroad Retirement Board, 844 Rush Street, Chicago, Illinois 60611, (312) 751-4801 (FTS 387-4801).

SUPPLEMENTARY INFORMATION: In accordance with the Board's report under E.O. 12044, a proposal to develop regulations to implement the Board's responsibilities under the Milwaukee Railroad Restructuring Act was submitted to the Chief Executive Officer for a determination as to whether such regulations would be significant. The Chief Executive Officer determined that, while the proposed regulations would not be significant under the criteria established in the Board's report, the regulations should, nevertheless, be considered as significant and handled accordingly. The proposal was then submitted to the three-member Board and the Board determined that no regulatory analysis would be required.

The Board has received applications for benefits under the Milwaukee Railroad Restructuring Act and has begun paying benefits to eligible individuals. Accordingly, it is necessary for the Board to publish these rules as Final Rules, rather than Proposed Rules. The Board will, however, accept comments from the public concerning these regulations. Interested persons may submit written comments, suggestions, data, or arguments to Ms. Marn. Material thus submitted will be evaluated and acted upon in the same manner as if this document were a proposal. Until such time as further changes are made, however, Parts 397 and 398 shall remain in effect, thus permitting the public business to proceed more expeditiously.

Part 397.8, Employment of Milwaukee Road Employees, was published as a Final Rule at 45 FR 17979 dated March 20, 1980, and when Title 20 of the Code of Federal Regulations was revised effective April 1, 1980, Part 397 was inadvertently carried into Subchapter E.

1. Title 20, Chapter II is amended by adding a new Subchapter I as follows:

SUBCHAPTER I—MILWAUKEE RAILROAD RESTRUCTURING ACT REGULATIONS

2. Part 397 is transferred to Subchapter I and is revised to read as follows:

PART 397—SUPPLEMENTARY UNEMPLOYMENT INSURANCE

Sec.
397.1 Purpose.
397.2 Definitions.
397.3 Eligibility for supplementary unemployment insurance benefits.
397.4 Claims for benefits.
397.5 Determination of benefit rates.
397.6 Initial determinations under the Milwaukee Railroad Restructuring Act and reviews of appeals from such determinations.
397.7 Recovery of benefits.
397.8 Employment of Milwaukee Road Employees.

Authority: Sec. 20, Pub. L. 96-101, 93 Stat. 746 (45 U.S.C. 918).

§ 397.1 Purpose.

The Railroad Retirement Board is delegated the responsibility of administering the supplementary unemployment insurance provisions under section 10 of the Milwaukee Railroad Restructuring Act. The purpose of these regulations is to delineate the Board's functions concerning the payment of supplementary unemployment insurance in accordance with that Act and to set forth the regulations necessary for the Board to pay supplementary unemployment insurance.

§ 397.2 Definitions.

For the purpose of this part, except where the language or context indicates otherwise:

"Act" means the Milwaukee Railroad Restructuring Act.

"Average monthly normal compensation" means the average monthly earnings for the employee in question in employment with the Milwaukee Railroad during the period June 1, 1977 through October 31, 1979, as computed under § 397.5(b) of this part. Included in monthly earnings are straight-time pay, vacation pay, birthday or holiday pay, pay for personal leave days, guarantee pay, and pay while on jury duty.

"Board" means the Railroad Retirement Board.

"Discharge for cause" means termination of employment for a reason relating to the individual as opposed to a termination of employment for a reason relating to a change or reduction in the operations of a rail carrier, to a restructuring of a railroad carrier, or to similar causes.

"Employee" includes any employee of the Milwaukee Railroad who worked on a line of such railroad the sale of which became effective October 1, 1979, but does not include any person serving the Milwaukee Railroad as president, vice-president, secretary, treasurer, comptroller, counsel, member of the board of directors, or any other person performing such functions.

"Failure to exercise seniority rights" means that the employee either did not make reasonable efforts to learn about the availability of positions that he could obtain by exercising his rights under the applicable employment agreement or did not act timely to exercise or to protect such rights.

"Milwaukee Railroad" means the Chicago, Milwaukee, St. Paul and Pacific Railroad Company.

"Month of service" means a calendar month during which the employee in question renders service for compensation to or receives pay for time lost from the Milwaukee Railroad.

"Resignation" means any leaving of work under circumstances which indicate an intent by the employee to terminate the employment relation, but does not include the cessation of self employment.

"Restructured Milwaukee Railroad" means the entity that is designated as the reorganized railroad under the reorganization plan for the Milwaukee Railroad finally certified by the Interstate Commerce Commission.

"Retirement" means a withdrawal from the labor market for the purpose of applying for a retirement benefit and includes voluntary retirement due to disability.

"Test period" means the period June 1, 1977 through October 31, 1979.

§ 397.3 Eligibility for supplementary unemployment insurance benefits.

(a) *Eligibility.* Any employee who had an employment relation with the Milwaukee Railroad on September 30, 1979, and who is either employed by the Restructured Milwaukee Railroad and is separated from that employment by reason of a reduction in service prior to April 1, 1984, or is separated from his employment with the Milwaukee Railroad and prior to April 1, 1981 obtains employment with another rail carrier and is separated from such employment prior to April 1, 1984, shall, upon filing an application and claim in accordance with § 397.4 of this part, be entitled to receive monthly supplementary unemployment insurance benefits in accordance with these regulations. Separation from employment includes, but is not limited to, separation by reason of furlough. An employee shall be considered as having an employment relation on September 30, 1979, if:

(1) The employee was paid compensation for that date by the Milwaukee Railroad;

(2) The employee was on an approved leave of absence on that date;

(3) The employee was on sick leave on that date;

(4) The employee was in furlough status on September 30, 1979, or otherwise held rights to employment with the Milwaukee Railroad on that date.

(b) *Maximum number of months for which benefits may be paid.* An eligible employee shall be entitled to receive supplementary unemployment insurance benefits for a maximum of 36 months, except that (1) the period of entitlement of an employee shall not exceed the employee's total months of service with the Milwaukee Railroad, and (2) no supplementary unemployment insurance benefits shall be paid after April 1, 1984, unless (A) additional payments are necessary in order to provide an employee with eight months of such benefits, and (B) the employee is separated on or before April 1, 1984, and is continuously unemployed after such date.

(c) *Disqualifications.* No employee shall be entitled to supplementary unemployment insurance benefits for any month or portion of a month in which such employee is unemployed due to normal seasonal unemployment patterns in the railroad industry. No employee shall be entitled to supplementary unemployment insurance benefits if:

(1) The employee is separated from employment with any carrier by reason of his resignation, retirement, or discharge for cause;

(2) The employee has failed to exhaust all seniority rights or other employment rights under applicable collective bargaining agreements; or

(3) The employee has received a separation allowance under section 5 of the employee protection agreement entered into under the authority of section 9(b) of the Act.

§ 397.4 Claims for benefits.

(a) *Claim for withdrawal of claim.* An employee shall claim supplementary unemployment insurance benefits for a specific month by filing a claim form with respect to such month. A claim for benefits may, in the absence of fraud, be withdrawn by the employee notifying the Board in writing that he no longer wishes to claim entitlement to benefits for such month.

(b) *Completion of application and claim forms.* All of the items on the application and on each claim form must be completed by the employee. If any item is omitted, the application or claim form shall be returned to the individual for completion. However, the date that

the application or claim form was originally received by the Board shall be regarded as the filing date.

(c) *Filing in advance.* A claim form which bears a signature date prior to the last day of the month claimed, or which is received by the Board before the last day of the month claimed, shall be returned to the employee by the Board with a request either to resubmit the claim at the proper time or to sign and date the claim again.

(d) *Time limit for filing.* Benefits shall not be payable with respect to a particular month unless the claim form for such month is received by the Board no later than 30 days after the end of the month claimed.

(e) *Late filing.* A claim form which is received by the Board after the prescribed 30-day time limit has expired shall be considered as timely filed if the claimant was prevented from filing timely due to circumstances beyond his control. Circumstances beyond a claimant's control include, but are not limited to, the following:

(1) Delay by Board office in furnishing a form to the claimant,

(2) Misinformation from a Board employee,

(3) Misinformation from a railway labor organization official or a railroad employer official,

(4) Delay, loss, or damage of the claim form in the mail,

(5) Injury or illness of the claimant or members of his immediate family.

In determining whether a claimant form is timely filed, the Board can require a claimant to furnish a written statement of the actions he took to file his claim or of the circumstances he believes prevented him from filing timely. In no event shall a claim form be considered as timely filed if it is received by the Board more than one year after the month claimed.

§ 397.5 Determination of benefit rates.

(a) *Amount of benefits.* Supplementary unemployment insurance shall be payable to an emplyee on a monthly basis in an amount equal to 80 percent of such employee's average monthly normal compensation as computed under paragraph (b) of this section, less the sum of (1) the amount of any benefits payable to such employee for such month under the Railroad Unemployment Insurance Act or under any state unemployment insurance program, and (2) the amount of any earnings of such employee for such month from employment or selfemployment of any kind. For the pupose of computing the reduction in benefits computed under this subsection, the first four days of unemployment in a registration period under the Railroad Unemployment Insurance Act shall not be regarded as compensable days of unemployment under that Act.

(b) *Computation of average monthly normal compensation.* The employee's average monthly normal compensation is computed by dividing the total normal compensation earned by the employee during the test period as defined in § 397.2(h) of these regulations, by the number of months during the test period in which the employee earned monthly pay.

§ 397.6 Initial determinations under the Milwaukee Railroad Restructuring Act and reviews of appeals from such determinations.

(a) *Initial determinations with respect to applications and claims.* Each claim for supplementary unemployment insurance shall be adjudicated and the initial determination with respect thereto shall be made upon the basis of the claim form, the application, and any statement or supplements filed in connection therewith, the evidence submitted by the claimant, and evidence otherwise available. Claims shall be adjudicated and initial determinations shall be made in accordance with instructions issued by the Director of Unemployment and Sickness Insurance.

(b) *Notice of initial determination.* Notice of an initial determination which denies in whole or in part a claim for benefits shall contain a brief statement of the reason for the denial and shall be communicated in writing to the claimant within 15 days after such intitial determination is made. Such notice shall contain an explanation of the claimant's right to review as provided in paragraph (c) of this section and of this right to appeal as provided in paragraph (d) of this section. Notice shall be deemed to have been communicated to the claimant when it is mailed to the claimant at the latest address furnished by him.

(c) *Review of initial determination and notice of decision upon review.*

(1) *Review.* Within 60 days after notice of an initial determination has been communicated to a claimant, the claimant may make an oral or written request for a review of the initial determination. The official designated by the Director of Unemployment and Sickness Insurance shall review the determination, shall take any further action which may be required, and shall decide whether to sustain or reverse such determination.

(2) *Notice of decision.* Notice of the decision made upon review shall be communicated to the claimant in writing within 15 days after such decision is made. If the effect of the decision is that the claim is still denied in whole or in part, the claimant shall be notified in the communication of his right to appeal as provided in paragraph (d) of this section.

(d) *Appeal from an initial determination.*

(1) Any claimant may appeal from an initial determination denying his claim for benefits in whole or in part whether or not a review of such determination has been made under the provisions of paragraph (c)(2) of this section. An appeal from an initial determination shall be filed by mailing a letter to the Board which is signed by the appellant and states the basis for the appeal. An appeal from an initial determination shall be considered to have been filed when it is received in an office of the Board. Such appeal shall be filed within 60 days from the date on which notice of an initial determination is communicated to the appellant or within 30 days from the date on which notice of the decision made upon review is communicated to the appellant, whichever period ends later. Unless an appeal from an initial determination is filed by the appellant in the manner and with the time provided herein, all rights to further review of the initial determination shall be forfeited.

(2) Within a reasonable time, but not to exceed 45 days, after an appellant has filed an appeal, the Director of Unemployment and Sickness Insurance shall appoint a referee to act in the appeal. Such referee shall not (i) have any interest in the parties or in the outcome of the proceeding, (ii) have directly participated in the initial determination from which the appeal is made, and (iii) have any other interest in the matter which might prevent a fair and impartial hearing.

(3) In the development of an appeal, the referee shall have the power to hold hearings, require and compel the attendance of witnesses, administer oaths, take testimony, and make all necessary investigations.

(4) Promptly after being appointed, the referee shall notify all parties properly interested of their right to participate in the proceeding. Upon the scheduling of a hearing on an appeal, written notice of the hearing specifying the place and time thereof, shall be given to the properly interested parties at least seven days before the date of the hearing, unless such notice is waived by the parties. Such notice shall be mailed to the parties at the latest addresses furnished by them.

(5) The appellant, or the appellant's representative, shall be afforded full

opportunity to present evidence upon any question of fact, orally or in writing or by means of exhibits, to examine and cross-examine witnesses, and to present argument in support of the appeal. If in the judgment of the referee, evidence not offered by the appellant is available and is relevant and material to the merits of the claim, the referee may obtain such evidence upon the referee's own initiative. If new evidence is obtaind by the referee subsequent to an oral hearing, the referee shall notify the appellant or his representative that such evidence was obtained and shall describe the nature of the evidence in question. In such event, the appellant shall have the right to submit rebuttal evidence or argument or to an oral hearing to confront and challenge such new evidence. The referee shall protect the record against scandal, impertinence, and irrelevancies, but the technical rules of evidence shall not apply.

(6) If the referee finds that no factual issues are presented by an appeal, and the only issues raised by the appellant are issues concerning the application or interpretation of law, the appellant or his representative shall be afforded full opportunity to submit written argument in support of the claim but no oral hearing shall be held.

(7) All evidence presented by any party or by the party's duly authorized representative, and all evidence developed by the referee, shall be preserved. Such evidence, together with a record of the arguments, oral or written, and the file previously made in the adjudication of the claim, shall constitute the record. After an appeal from an initial determination is filed, the compilation of the record shall be initiated by the inclusion therein of the file made in the adjudication of the claim; the compilation of the record shall be kept up-to-date by the prompt addition thereto of all parts of the record subsequently developed. The entire record at any time during the pendency of an appeal shall be available for examination by any properly interested party or by the party's duly authorized representative.

(8) As soon as practicable after the completion of the record, the referee shall render a decision. The decision shall be based on the record and shall be in writing. Such decision shall contain a brief statement of (i) the issue or issues raised, (ii) the evidence submitted, (iii) the findings of fact, (iv) the decision made, and (v) the reasons therefor. Within 15 days after rendition of the decision or submission of the report, a copy of the decision or report shall be mailed to each interested party at the last address of record.

(e) *Finality.* The decision of the referee shall be final and binding on the Board.

§ 397.7 Recovery of benefits.

(a) *Authorization.* Amounts of supplementary unemployment insurance paid under the Milwaukee Railroad Restructuring Act which have been determined to have been paid erroneously shall be recovered in all cases except those in which a compromise is approved under § 397.7(c) of these regulations. An amount determined to have been paid erroneously may be recovered by any one or a combination of the methods described in § 397.7(b) of these regulations.

(b) *Methods of recovery.*

(1) *Recovery by cash payment.* The Board shall have the right to require that amounts recoverable be immediately and fully repaid in cash and any debtor shall have the absolute right to repay such amount recoverable in this manner. However, if the debtor is financially unable to pay the indebtedness in a lump sum, payment may be accepted in regular installments. The amount and frequency of such installment payments should bear a reasonable relation to the size of the debt and the debtor's ability to pay. Whenever possible, installment payments should be sufficient in amounts and frequency to liquidate the debt in not more than three years.

(2) *Recovery of setoff.* An amount which has been determined to have been paid erroneously may be recovered by setoff against any benefit which the employee who received that erroneous payment is entitled to under the Milwaukee Railroad Restructuring Act, the Railroad Unemployment Insurance Act, or the Railroad Retirement Act. In the case of that individual's death, such amount may be recovered from any payments due under those Acts to his estate, designee, next of kin, legal representative, or surviving spouse. In any case in which full recovery is not effected by setoff, the balance due may be recovered by one or more of the other methods described in this part. If the individual dies before recovery is completed, such recovery shall be made from his estate or heirs.

(c) *Compromise of amounts recoverable.*

(1) The Board or its designee may compromise an amount recoverable, provided such amount does not exceed $20,000. Compromise of an amount recoverable may not be considered in any case in which there is an indication of fraud, the presentation of a false claim, or misrepresentation. Compromise is at all times within the discretionary authority of the Board or its designee.

(2) The following indicate the character of reasons which will be considered in approving a compromise:

(i) The debtor's ability to repay the full amount within a reasonable time;

(ii) The debtor's refusal to pay the claim in full and the Board's inability to effect collection in full within a reasonable time by other collection methods;

(iii) Doubt concerning the Board's ability to prove its cases in court for the full amount; or

(iv) The cost of collecting the amount recoverable does not justify the enforced collection of the full amount.

(d) *Suspension or termination of collection action.* Collection action on a Board claim may be suspended or terminated under the following conditions:

(1) Collection action on a Board claim may be suspended temporarily when the debtor cannot be located and there is reason to believe that future collection action may be productive or that collection may be affected by setoff in the near future.

(2) Collection action may be terminated when:

(i) The debtor is unable to make any substantial payment;

(ii) The debtor cannot be located and setoff is too remote to justify retention of the claim;

(iii) The cost of collection action will exceed the amount recoverable;

(iv) The claim is legally without merit or cannot be substantiated by the evidence.

§ 397.8 Employment of Milwaukee Road employees.

(a) The Railroad Retirement Board shall prepare and maintain the following lists:

(1) A current list of individuals who are separated from employment with the Milwaukee Railroad, and who notify the Board that they wish to have their names included on a list to be available to rail carriers, and who have not yet obtained employment with another rail carrier;

(2) A current list of employment opportunities, by class and by craft, provided by rail carriers.

(b) The Board shall maintain the lists referred to in paragraphs (a)(1) and (a)(2) of this section through December 31, 1984.

(c) The Board shall furnish copies of the list referred to in paragraph (a)(1) of this section to any rail carrier upon request.

(d) Rail carriers shall report available job openings to the Board for purposes of inclusion in the list referred to in paragraph (a)(2) of this section. The report for each available job opening may be made either by telephone or by mail to any office of the Board. Available job openings should be listed with the Board as soon as possible but, in any event, at least concurrently with the use of any other recruitment source or effort.

(e) Each report required to be made under paragraph (d) of this section shall include the following information:

(1) The number of employees to be hired;

(2) The location of the jobs;

(3) The class or craft of the jobs or a description of the work to be performed in those jobs; and

(4) The name, address, and telephone number of the individual with authority to hire employees for each of the job openings.

(f) In order to ensure that the list of employment opportunities remains current and accurate, rail carriers shall notify the Board promptly when previously reported job openings are closed for any reason. The report of any such vacancy closure can be made either by telephone or by mail to the office of the Board with which the vacancy was originally listed. The report should identify the vacancy notice, give the number of employees hired, and give the names and social security account numbers of those hired who are former Milwaukee Road employees.

3. Part 398 (previously reserved) is added to read as follows:

PART 398—NEW CAREER TRAINING ASSISTANCE

Sec.
398.1 Purpose.
398.2 Definitions.
398.3 Eligibility for new career training assistance.
398.4 Application for new career training assistance.
398.5 Amount of benefits.
398.6 Reviews of and appeals from denial of applications for new career training assistance.
398.7 Post-payment audit by Board.

Authority: Sec. 29, Pub. L. 96-101, 93 Stat. 746 (45 U.S.C. 918).

§ 398.1 Purpose.

The Railroad Retirement Board is delegated the responsibility of administering the new career training assistance provisions under section 12 of the Milwaukee Railroad Restructuring Act. The purpose of these reguations is to delineate the Board's functions concerning the payment of new career training assistance in accordance with that Act and to set forth the regulations necessary for the Board to pay new career training assistance.

§ 398.2 Definitions.

For the purpose of this part, except where the language or context indicates otherwise:

"Act" means the Milwaukee Railroad Restructuring Act.

"Board" means the Railroad Retirement Board.

"Educational materials" are the personally owned items required of every student pursuing the same educational program.

"Employee" means any employee of the Milwaukee Railroad who worked on a line of such railroad the sale of which became effective October 1, 1979, but does not include any person serving the Milwaukee Railroad as president, vice-president, secretary, treasurer, comptroller, counsel, member of the board of directors, or any other person performing such functions.

"Expenses for board" are the charges for meals, laundry, and cleaning and pressing of clothes incurred while occupying temporary lodging described as "Room expenses".

"Fees" are payments other than tuition required by an educational institution from every student taking a particular course.

"Milwaukee Railroad" means the Chicago, Milwaukee, St. Paul and Pacific Railroad Company.

"New career training" is any educational program which is pursued at or under the auspices of a qualified institution and which is intended to assist in the acquiring of skills and knowledges to facilitate the acquisition of employment.

A "qualified institution" is an educational institution accredited for payment by the Veterans Administration under chapter 36 of title 38 of the United States Code or a State-accredited institution which has been in existence for not less than two years.

"Restructured Milwaukee Railroad" means the entity that is designated as the reorganized railroad under the reorganization plan for the Milwaukee Railroad finally certified by the Interstate Commerce Commission.

"Room expenses" are the lodging charges or room rates of the educational institutions or third party from whom temporary lodging is obtained for lodging which is necessary to enable the student to complete his course of study and is separate from and in addition to the student's permanent residence.

"Tuition" is the normal charge for instruction that an educational institution requires from all similarly circumstanced persons pursuing the same educational program.

§ 398.3 Eligibility for new career training assistance.

Any employee shall, upon filing an application in accordance with § 398.4 of this part, be entitled to receive new career training assistance if:

(a) The employee has elected to receive a separation allowance under section 5 of the employee protection agreement entered into under the authority of section 9(b) of the Act;

(b) The employee begins career training within two years of his date of separation from the Milwaukee Railroad; and

(c) The expense incurred in connection with new career training and for which reimbursement is claimed under this part have been incurred before April 1, 1984.

§ 398.4 Application for new career training assistance.

An employee shall file an application for new career training assistance within six months of having incurred expenses in an amount equal to or greater than $10 for which the employee is eligible for reimbursement in accordance with this part. Applications for amounts less than $10 shall be held by the Board until at least $10 is claimed unless the employee indicates on the application that it is the final application which he intends to file. Such application shall be on a form provided by the Board and shall be filed with the Director of Unemployment and Sickness Insurance, Railroad Retirement Board, 844 Rush Street, Chicago, Illinois, 60611. Acceptable proof that the employee incurred reimbursable expenses must accompany the application.

§ 398.5 Amount of benefits.

New career training assistance shall be payable to an employee in reimbursement for actual expenses for room, board, tuition, fees, or educational materials in a total amount not to exceed $3,000.00.

§ 398.6 Reviews of and appeals from denials of applications for new career training assistance.

The provisions of § 397.6 of this subchapter shall be applicable to an application for new career training assistance.

§ 398.7 Post-payment audit by Board.

If the Director of Unemployment and Sickness Insurance finds that a qualified institution has charged or received from any eligible employee pursuing a program of education under this part

any amount for any course in excess of the changes for tuition and fees which such institution requires of similarly circumstanced persons not receiving new career training assistance, the Director may disapprove such educational institution for the enrollment of any eligible employee not already enrolled therein. The Director may deny new career training assistance for any eligible employee if the Board finds that the program of education or any course in which the employee is enrolled fails to meet any of the requirements of this part or if the Director finds that the educational institution has violated any provision of this part or has failed to meet any of the requirements of this part.

PART 399—[Reserved]

Dated: December 16, 1980.

By Authority of the Board.

R. F. Butler,

Secretary of the Board.

[FR Doc. 80-40497 Filed 12-30-80; 8:45 am]

BILLING CODE 7905-01-M

DEPARTMENT OF THE TREASURY

Internal Revenue Service

26 CFR Part 1

[T.D. 7746]

Income Tax; Taxable Years Beginning After December 31, 1953; Reasonable Funding Methods

AGENCY: Internal Revenue Service, Treasury.

ACTION: Final regulations.

SUMMARY: This document contains final regulations relating to reasonable funding methods. Changes in the applicable tax law were made by the Employee Retirement Income Security Act of 1974. The regulations provide the public with guidance needed to comply with that Act and affect defined benefit pension plans.

DATE: The regulations are effective for plan years beginning after 1975, but earlier (or later) in the case of some plans as provided for meeting the minimum funding requirements under the Employee Retirement Income Security Act of 1974. However, a transitional rule generally delays the date for complying with the substantive provisions of the regulations to April 30, 1981.

FOR FURTHER INFORMATION CONTACT: Joel E. Horowitz of the Employee Plans and Exempt Organizations Division, Office of the Chief Counsel, Internal Revenue Service, 1111 Constitution Avenue, N.W., Washington, D.C. 20224 (Attention: CC:LR:T) (202-566-6212).

SUPPLEMENTARY INFORMATION:

Background

On October 5, 1979, the Internal Revenue Service published proposed amendments to the Income Tax Regulations (26 CFR Part 1) under section 412(c)(3) of the Internal Revenue Code of 1954. These amendments were proposed to conform the regulations to sections 3(31) and 1013(a) of the Employee Retirement Income Security Act of 1974 (ERISA) (88 Stat. 837, 914). A public hearing was held on February 21, 1980.

After consideration of all the written comments and the oral presentations at the hearing, the proposed amendments are adopted, as revised, by this Treasury decision under the authority of section 3(31) of ERISA (88 Stat. 837; 29 U.S.C. 1002) and section 7805 of the Internal Revenue Code of 1954 (68A Stat. 917; 26 U.S.C. 7805). The regulations contained in this document also apply for purposes of section 302(c)(3) of ERISA (88 Stat. 871).

Fundamental Issues

On two fundamental issues, comments were received both from persons who favored the proposed amendments and from persons who opposed them.

The first issue is the scope of the authority upon which the Treasury Department relies in publishing these regulations. That authority arises primarily and specifically from section 3(31) of ERISA.

The first sentence of section 3(31) generically defines a funding method as "a recognized actuarial technique for establishing the amount and incidence of the annual actuarial cost of pension plan benefits and expenses." The second sentence of the section lists six methods that shall be included among the "acceptable actuarial cost methods." The third sentence specifically excludes two methods from the acceptable category. The fourth sentence states: "The Secretary of the Treasury shall issue regulations to further define acceptable actuarial cost methods."

Some of the comments maintained that the use of the six methods listed in the second sentence and any variations of these methods should not be limited by the regulations. These comments suggested that the authority delegated to the Secretary in the fourth sentence should be exercised only with respect to methods that were not variations of the methods identified in section 3(31).

The final regulations represent the view of the Treasury Department that the authority delegated by section 3(31) is in fact authority to *further* define acceptable methods, not just authority to identify *additional* acceptable methods. The Treasury Department's view is that the regulations may further define any of the six methods identified as acceptable in section 3(31). The regulations do this in the case of a variation of the unit credit method which is discussed later.

The second pivotal issue turns on the relationship between the minimum funding requirements of section 412 of the Code and the maximum deduction limits of section 404.

The preamble to the proposed regulations discussed the need to limit abuses of preferential tax treatment by preventing overfunding. Some of the comments suggested that this was not an appropriate interest in structuring the limits of acceptability for a reasonable funding method. However, this suggestion disregards the link in section 404(a)(1)(A) between section 412 (and therefore reasonable funding methods) and section 404. Therefore, the final regulations continue to represent the view of the Treasury Department that under the law as currently structured regulations under section 412 must balance the conflicting interests of sections 404 and 412.

Compensation-Based Allocation of Liabilities

The most controversial provision of the proposed regulations was the following sentence: "An allocation [of liabilities under a unit credit funding method using final pay] based on compensation would not be permitted."

This rule limits the use of certain variations of the unit credit funding method. The unit credit method allocates plan costs for a benefit to the year when that benefit is considered to accrue. Because an employee's compensation tends to increase over the course of his or her career, the allocation of liabilities based on compensation considers benefits to accrue more slowly than if allocations of liabilities were made on the basis provided by the regulation. Thus, by requiring the allocation to be made strictly on the basis of past and anticipated future years of service, the regulation requires that a method reflect these higher benefit accruals and so accumulate funds more rapidly than if a compensation based allocation were permitted.

The major argument raised in connection with the compensation-based allocation contrasts the funding of

a career average pay plan and a final pay plan which, on the basis of an assumed salary scale, are designed to provide the same normal retirement benefits. It is argued that, under the regulation, more rapid funding would be required under the final average pay plan even though, given these assumptions, the final pay plan does not provide for benefits which, at any point in time, exceed those provided by the career average pay plan.

Although a final average pay plan and a career average pay plan may be designed to provide an equivalent benefit for a given combination of age and service (or, depending on the benefit structure, a combination of age, service and compensation), the two types of plans are not necessarily equivalent. First, they will not be equivalent for other ages or years of service or, perhaps, compensation levels. Second, plan commitments are different; although the plans may provide numerically equal benefits for an assumed salary scale, they are committed to levels of benefits which may vary significantly as actual salary progressions differ from those assumed. Third, the difference between salary experience and salary assumed has a greater impact on a final average pay plan than on a career average plan.

Further, different treatment for these two situations is justified in light of differences in benefit security and administrative costs in each case. The Treasury Department believes that the best rule, theoretically, for both final average pay plans and career average pay plans would be to use a projection, adjusted for the nature of the plan, and an allocation of liabilities based on service. However, in the case of a career average pay plan, deviations between this rule and more simple rules are not very great. In general, a career average pay plan will not become dramatically underfunded in a short period of time solely by virtue of large salary increases. Imposition of the best, theoretical rule on a career average pay plan would cause an increase in administrative expenses with a relatively small increase in benefit security. Accordingly, career average pay plans may be funded on a basis that is regarded as less than theoretically correct. The same result does not occur in a final average pay plan. A final average pay plan could become dramatically underfunded in a fairly short period of time solely by virtue of large salary increases. The exception that is permitted for career average pay plans, therefore, would be inappropriate for final average pay plans.

Anticipated Benefit Changes

A number of comments misunderstood the significance of the phrase "except as otherwise provided by the Commissioner" in the proposed provision relating to anticipated benefit changes. This phrase enables the Commissioner to provide rules that are less restrictive than the general rules under the regulations. For example, the less restrictive requirements of Rev. Rul. 77-2, 1977-1 C.B. 120, would continue to apply under the regulations.

The comments reflected a broad range of differing opinions regarding the proposal prohibiting the anticipation of benefit changes. These comments generally noted the conflicting directions of this provision and other provisions, and viewed this position as an impediment to adequate funding of plans. The most persuasive of these comments urged the adoption of a permissive rule with respect to the anticipation of increases in benefits provided for future years by the terms of a collective bargaining agreement.

The final regulations reflect the view that, because of the binding nature of benefit increases provided in collective-bargaining agreements, it is reasonable to anticipate such increases for funding purposes in years before the increases are actually effective. This approach encourages faster funding and benefit security. However, the anticipation or failure to anticipate the benefit increases is part of a plan's funding method. Thus, a change in the plan's treatment of anticipated benefit increases is a change in funding method.

Anticipated Future Participants

The regulations as proposed would have provided that a reasonable funding method may not anticipate the affiliation with the plan of future participants. A number of comments that favored the intended effect of the provision, to prohibit open group funding methods, urged that the prohibition apply not to the anticipation of future participants but to the anticipation of future employees. These comments noted that it is common practice for a plan to determine funding requirements for the current year by anticipating the participation in the plan of current employees, subject to an appropriate turnover assumption.

The final regulations follow the suggested approach of these comments and prohibit the anticipation of future employees. However, it is permitted to anticipate the satisfaction of participation requirements by employees who are not presently participants.

The final regulations do not follow the suggestion of some comments that open group funding should be allowed. Unlike acceptable approaches to funding, the open group approach weakens what might be an acceptable method in identical circumstances by producing a low minimum funding requirement during years of corporate growth and producing a high minimum funding requirement during years of corporate decline. The method itself offers no check on such a weakened funding posture for the plan.

Ancillary Benefits

The proposed amendments described a number of methods for funding pre-retirement ancillary benefits. The final regulations do not distinguish between pre- and post-retirement ancillary benefits. They also clarify which benefits are considered ancillary benefits for funding purposes by providing a definition and examples.

Comments received on the proposed regulations addressed proposed rules relating to 1-year term funding. They suggested that the final regulations provide for the approval by the Commissioner of other methods that compare favorably with 1-year term funding. Also, comments suggested that the test for measuring the significance of ancillary costs (and, thus, determining eligibility for using term costs) was inadequate.

The provision indicating the cost range within which an ancillary cost must fall in order to utilize 1-year term funding has been reserved. It is anticipated that a revised provision on this subject will be proposed for public comment at a later date. It is expected that the revised proposal will address the problem of comparing term costs with total plan costs and will concern both 1-year term funding and other methods.

Transitional Rule

The final regulations recognize that immediate compliance may jeopardize the short-term financial stability of certain plans. Thus, two optional procedures are available to ease this burden by allowing a gradual phase-in of the higher costs and amortizing the "waived" costs over the following 15 years.

Effective Dates

In general, the regulations are effective for valuations as of a date after April 30, 1981. For certain collectively bargained plans, the regulations are effective as of the earlier of the expiration of the collective bargaining agreement or April 30, 1984.

Other Changes

The final regulations also differ in other respects from the proposed amendments. These changes consist of minor technical modifications suggested by the comments and structural alterations designed to enhance the clarity of the final regulations.

Drafting Information

The principal author of these final regulations was Joel E. Horowitz of the Employee Plans and Exempt Organizations Division of the Office of Chief Counsel, Internal Revenue Service. However, personnel from other offices of the Internal Revenue Service and Treasury Department participated in developing the regulations, both on matters of substance and style.

Adoption of Amendments to the Regulations

Accordingly, 26 CFR Part 1 is amended by adding in the following new sections immediately after § 1.412(c)(2)-1:

§ 1.412(c)(3)-1 Reasonable funding methods.

(a) *Introduction*—(1) *In general.* This section prescribes rules for determining whether or not, in the case of an ongoing plan, a funding method is reasonable for purposes of section 412(c)(3). A method is unreasonable only if it is found to be inconsistent with a rule prescribed in this section. The term "reasonable funding method" under this section has the same meaning as the term "acceptable actuarial cost method" under section 3(31) of the Employee Retirement Income Security Act of 1974 (ERISA).

(2) *Computations included in method.* See § 1.412(c)(1)-1(b) for a discussion of matters that are, and are not, included in the funding method of a plan.

(3) *Plans using shortfall.* The shortfall method is a method of determining charges to the funding standard account by adapting the underlying funding method of certain collectively bargained plans in the manner described in § 1.412(c)(1)-2. As such, the shortfall method is a funding method. The underlying method of a plan that uses the shortfall method must be a reasonable funding method under this section. The rules contained in this section, relating to cost under a reasonable funding method, apply in the shortfall method to the annual computation charge under § 1.412(c)(1)-2(d).

(4) *Scope of funding method.* Except for the shortfall method, a reasonable funding method is applied to the computation of—

(i) The normal cost of a plan for a plan year; and, if applicable,

(ii) The bases established under section 412(b)(2)(B), (C), and (D), and (3)(B) ("amortizable bases").

(b) *General rules for reasonable funding methods*—(1) *Basic funding formula.* At any time, except as provided by the Commissioner, the present value of future benefits under a reasonable funding method must equal the sum of the following amounts:

(i) The present value of normal costs (taking into account future mandatory employee contributions, within the meaning of section 411(c)(2)(C), in the case of a contributory plan) over the future working lifetime of participants;

(ii) The sum of the unamortized portions of amortizable bases, if any, treating credit bases under section 412(b)(3)(B) as negative numbers; and

(iii) The plan assets, decreased by a credit balance (and increased by a debit balance) in the funding standard account under section 412(b).

(2) *Normal cost.* Normal cost under a reasonable funding method must be expressed as—

(i) A level dollar amount, or a level percentage of pay, that is computed from year to year on either an individual basis or an aggregate basis; or

(ii) An amount equal to the present value of benefits accruing under the method for a particular plan year.

(3) *Application to shortfall.* Paragraph (b)(2) will not fail to be satisfied merely because an amount described in (i) or (ii) is expressed as permitted under the shortfall method.

(c) *Additional requirements*—(1) *Inclusion of all liabilities.* Under a reasonable funding method, all liabilities of the plan for benefits, whether vested or not, must be taken into account.

(2) *Production of experience gains and losses.* If each actuarial assumption is exactly realized under a reasonable funding method, no experience gains or losses are produced.

(3) *Plan population*—(i) *In general.* Under a reasonable funding method, the plan population must include three classes of individuals: participants currently employed in the service of the employer; former participants who either terminated service with the employer, or retired, under the plan; and all other individuals currently entitled to benefits under the plan. See § 1.412(c)(3)-1(d)(2) for rules concerning anticipated future participants.

(ii) *Limited exclusion for certain recent participants.* Under a reasonable funding method, certain individuals may be excluded from the first class of individuals described in paragraph (c)(3)(i) of this section unless otherwise provided by the Commissioner. The excludable individuals are participants who would be excluded from participation by the minimum age or service requirement of section 410 but who, under the terms of the plan, participate immediately upon entering the service of the employer.

(iii) *Special exclusion for "rule of parity" cases.* Under a reasonable funding method, certain individuals may be excluded from the second class of individuals described in paragraph (c)(3)(i) of this section. The excludable individuals are those former participants who have terminated service with the employer without vested benefits and whose service might be taken into account in future years because the "rule of parity" of section 411(a)(6)(D) does not permit that service to be disregarded. However if the plan's experience as to separated employees' returning to service has been such that the exclusion described in this subparagraph would be unreasonable, the exclusion would no longer apply.

(4) *Use of salary scale*—(i) *General acceptability.* The use of a salary scale assumption is not inappropriate merely because of the funding method with which it is used. Therefore, in determining whether actuarial assumptions are reasonable, a salary scale will not be considered to be prohibited merely because a particular funding method is being used.

(ii) *Projection to appropriate salary.* Under a reasonable funding method, salary scales reflected in projected benefits must be the expected salary on which benefits would be based under the plan at the age when the receipt of benefits is expected to begin.

(5) *Treatment of allocable items.* Under a reasonable funding method that allocates assets to individual participants to determine costs, the allocation of assets among participants must be reasonable. An initial allocation of assets among participants will be considered reasonable only if it is in proportion to related liabilities. However, the Commissioner may determine, based on the facts and circumstances, that it is unreasonable to continue to allocate assets on this basis beyond the initial year. Under a reasonable funding method that allocates liabilities among different elements of past and future service, the allocation of liabilities must be reasonable.

(d) *Prohibited considerations under a reasonable funding method*—(1) *Anticipated benefit changes*—(i) *In general.* Except as otherwise provided by the Commissioner, a reasonable

funding method does not anticipate changes in plan benefits that become effective, whether or not retroactively, in a future plan year or that become effective after the first day of, but during, a current plan year.

(ii) *Exception for collectively bargained plans.* A collectively bargained plan described in section 413(a) may on a consistent basis anticipate benefit increases scheduled to take effect during the term of the collective-bargaining agreement applicable to the plan. A plan's treatment of benefit increases scheduled in a collective bargaining agreement is part of its funding method. Accordingly, a change in a plan's treatment of such benefit increases (for example, ignoring anticipated increases after taking them into account) is a change of funding method.

(2) *Anticipated future participants.* A reasonable funding method must not anticipate the affiliation with the plan of future participants not employed in the service of the employer on the plan valuation date. However, a reasonable funding method may anticipate the affiliation with the plan of current employees who have not satisfied the participation requirements of the plan.

(e) *Special rules for certain funding methods*—(1) *Applicability of special rules.* Paragraph (e) of this section applies to a funding method that determines normal cost under paragraph (b)(2)(ii) of this section.

(2) *Use of salary scale.* For rules relating to use of a salary scale assumption, see paragraph (c)(4) of this section.

(3) *Allocation of liabilities.* In determining a plan's normal cost and accrued liability for a particular plan year, the projected benefits of the plan must be allocated between past years and future years. Except in the case of a career average pay plan, this allocation must be in proportion to the applicable rates of benefit accrual under the plan. Thus, the allocation to past years is effected by multiplying the projected benefit by a fraction. The numerator of the fraction is the participant's credited years of service. The denominator is the participant's total credited years of service at the anticipated benefit commencement date. Adjustments are made to account for changes in the rate of benefit accrual. An allocation based on compensation is not permitted. In the case of a career average pay plan, an allocation between past and future service benefits must be reasonable.

(f) *Treatment of ancillary benefit costs*—(1) *General rule.* Under a reasonable funding method, except as otherwise provided by this paragraph (f), ancillary benefit costs must be computed by using the same method used to compute retirement benefit costs under a plan.

(2) *Ancillary benefit defined.* For purposes of this paragraph an ancillary benefit is a benefit that is paid as a result of a specified event which—

(i) Occurs not later than a participant's separation from service, and

(ii) Was detrimental to the participant's health.

Thus, for example, benefits payable if a participant dies or becomes disabled prior to separation from service are ancillary benefits because the events giving rise to the benefits are detrimental to the participant's health. However, an early retirement benefit, a social security supplement (as defined in § 1.411(a)-7(c)(4)(ii)), and the vesting of plan benefits (even if more rapid than is required by section 411) are not ancillary benefits because those benefits do not result from an event which is detrimental to the participant's health.

(3) *Exception for certain insurance contracts.* Under a reasonable funding method, regardless of the method used to compute retirement benefit costs, the cost of an ancillary benefit may equal the premium paid for that benefit under an insurance contract if—

(i) The ancillary benefit is provided under the contract, and

(ii) The benefit is guaranteed under the contract.

(4) *Exception for 1-year term funding and other approved methods.* [Reserved]

(5) *Section 401(h) benefits.* Section 412 does not apply to benefits that are described in section 401(h) and for which a separate account is maintained.

(g) *Examples.* The principles of this section are illustrated by the following examples:

Example (1). Assume that a plan, using funding method A, is in its first year. No contributions have been made to the plan, other than a nominal contribution to establish a corpus for the plan's trust. There is no past service liability, and the normal cost is a constant percentage of an annually determined amount. The constant percentage is 99 percent, and the annually determined amount is the excess of the present value of future benefits over plan assets. The present value of future benefits is $10,000. Under paragraph (b)(1) of this section, the present value of future benefits must equal the present value of future normal costs plus plan assets. (No amortizable bases exist, nor are there credit or debit balances.) Under method A, the present value of future normal costs would equal the sum of a series of annually decreasing amounts. Because of the constant percentage factor, the present value of future normal costs over the years can never equal $10,000, the present value of future benefits. In effect, then, assets under method A can never equal the present value of future benefits if all assumptions are exactly realized. Therefore, method A is not a reasonable funding method.

Example (2). Assume that a plan, using funding method B, determines normal cost by computing the present value of benefits expected to be accrued under the plan by the end of 10 years after the valuation date and adding to this the present value of benefits expected to be paid within these 10 years. Plan assets are subtracted from the sum of the two present value amounts. The difference then is divided by the present value of salaries projected over the 10 years. Under paragraph (c)(1) of this section, all liabilities of a plan must be taken into account. Because method B takes into account only benefits paid or accrued by the end of 10 years, it is not a reasonable funding method.

Example (3). Assume that a plan, using funding method C, determines normal cost as a constant percentage of compensation. (This percentage is determined as follows: The excess of projected benefits over accrued benefits is computed. Then the present value of this excess is divided by the present value of future salaries.) However, the accrued liability is computed each year as the present value of accrued benefits. (This computation does not reflect normal cost as a constant percentage of compensation. Thus, normal cost under the plan does not link accrued liabilities under the plan for consecutive years as would be the case, for example, under a unit credit cost method.) In determining gains and losses, method C compares the actual unfunded liability (the accrued liability less assets) with the expected unfunded liability (the sum of the actual unfunded liability in the previous year and the normal cost for the previous year less the contribution made for the previous year, all adjusted for interest). Under paragraph (c)(2) of this section, if actuarial assumptions are exactly realized, experience gains and losses must not be produced. Under method C, the use of a constant percentage in computing normal cost (and the expected unfunded liability) coupled with the manner of computing the accrued liability (and the actual unfunded liability) generally produces gains in the earlier years and losses in the later years if each actuarial assumption is exactly realized. Therefore, method C is not a reasonable funding method.

Example (4). Assume that a plan, using funding method D, bases benefits on final average pay. Under method D, the past service liability on any date equals the present value of the accrued benefit on that date based on compensation as of that date. The normal cost for any year equals the present value of a certain amount. That amount is the excess of the projected accrued benefit as of the end of the year over the actual accrued benefit at the beginning of the year. Accrued benefits, projected as of the end of a year, reflect a 1-year salary projection. Under paragraph (c)(4) of this section, salary scales reflected in projected benefits must project salaries to the salary on which benefits would be based under the plan at the age when the receipt of benefits

under the plan is expected to begin. Because the plan is not a career average pay plan and compensation is projected only 1 year, method D is not a reasonable funding method. (Under paragraph (c)(4) of this section, the use of a salary scale assumption could be required with a unit credit method if, without the use of a salary scale, assumptions in the aggregate are unreasonable.)

Example (5). Assume that a plan, using method E, a unit credit funding method, calculates a participant's accrued benefit according to the following formula: 2 percent of final salary for the first 10 years of service and 1 percent of final salary for the years of service in excess of 10. Under the plan, no employee may be credited with more than 25 years of service. The actuarial assumptions for the valuation include a salary scale of 5 percent per year. For a participant at age 40 with 15 years of service, a current salary of $20,000 and a normal retirement age of 65, the accrued liability for the retirement benefit is the present value of an annuity of $16,932 per year, commencing at age 65. The $16,932 is calculated as follows:

$$\$20{,}000 \times 3.3864 \times 35\% \times \frac{(10 \times 2) + (5 \times 1)}{(10 \times 2) - (15 \times 1) + (15 \times 0)}.$$

(3.3864 is 1.05 raised to the 25th power; the 25th power reflects the difference between normal retirement age and attained age (65–40).)

Salary under this method is projected to the age when the receipt of benefits is expected to begin. Therefore, method E meets the requirement of paragraph (c)(4) of this section. Also, the allocation of benefits under method E between past and future years of service meets the requirements of paragraph (e)(3) of this section.

Example (6). Assume that a plan that has two participants and that previously used the unit credit cost method wishes to change the funding method at the beginning of the plan year to funding method F, a modification of the aggregate cost method. The modification involves determining normal cost for each of the two participants under the plan. Therefore, it requires an allocation of assets to each participant for valuation purposes. The actuary proposes to allocate the assets on hand at the beginning of the plan year of the change in funding method in proportion to the accrued liabilities calculated under the unit credit cost method. The relevant results of the calculations are shown below:

	Employees		Totals
	M	N	
Accrued Liabilities (unit credit method):			
Dollar amount	15,670	906	16,576
Per cent of total	94.53	5.47	100.00
Assets:			
Dollar amount	7,835	453	8,288
per cent of total	94.53	5.47	100.00

The proposed allocation in proportion to the accrued liabilities under the unit credit cost method satisfies the requirements of paragraph (c)(5) of this section at the beginning of the first plan year for which the new method is used.

Example (7). The facts are the same as in Example (6). However, the actuary proposes to allocate all the assets to employee M, the older employee. Method F, under these facts, is not an acceptable funding method because the allocation is not in proportion to related liabilities as required under paragraph (c)(5) of this section.

§ 1.412(c)(3)-2 Effective dates and transitional rules relating to reasonable funding methods.

(a) *Introduction.* This section prescribes effective dates for rules relating to reasonable funding methods, under section 412(c)(3) and § 1.412(c)(3)-1. Also, this section sets forth rules concerning adjustments to a plan's funding standard account that are necessitated by a change in funding method, and a provision setting forth procedural requirements for use of an optional phase-in of required changes.

(b) *Effective date*—(1) *General rule.* Except as otherwise provided by subparagraph (2) of this paragraph, § 1.412(c)(3)-1 applies to any valuation of a plan's liabilities (within the meaning of section 412(c)(9)) as of a date after April 30, 1981.

(2) *Exception.* If a collective bargaining agreement which determines contributions to a plan is in effect on April 30, 1981, then § 1.412(c)(3)-1 applies to any valuation of that plan's liabilities as of a date after the earlier of the date on which the last such collective bargaining agreement expires or April 30, 1984.

(3) *Transitional rule.* The reasonableness of a funding method used in making a valuation of a plan's liability as of a date before the effective date determined under subparagraph (1) or (2) of this paragraph is determined on the basis of such published guidance as was available on the date as of which the valuation was made.

(c) *Change of funding method without approval*—(1) *In general.* A plan that is required to change its funding method to comply with § 1.412(c)(3)-1 is not required to submit the change of funding method for approval as otherwise required by section 412(c)(5). However, this change must be described on Form 5500, Schedule B for the plan year with respect to which the change is first effective.

(2) *Amortization base.* An amortization base must be established in the plan year of the change in method equal to the change in the unfunded liability due to the change (where both unfunded liabilities are based on the same actuarial assumptions). Such a base must be amortized over 30 years in determining the charges or credits to the funding standard account, unless the Commissioner upon application permits amortization over a shorter period.

(d) *Phase-in of additional funding required by new method*—(1) *In general.* A plan that is required to change its funding method to comply with § 1.412(c)(3)-1 may elect to charge and credit the funding standard account as provided in this paragraph. An election under this paragraph shall be irrevocable.

(2) *Credit in year of change.* In the plan year of the change in method the funding standard account may be credited with an amount not in excess of 0.8 multiplied by the excess (if any) of—

(i) The normal cost under the new method plus the amortization charge (or minus the amortization credit) computed as described in § 1.412(c)(3)-2(c)(2), over

(ii) The normal cost under the prior method, for the plan year of the change in method.

(3) *Credits in the next three years.* In the three years following the year of the change the funding standard account may be credited with an amount not in excess of 0.6, 0.4, and 0.2 respectively in the first, second, and third years, multiplied by either of the following amounts, computed as of the last day of the year of credit—

(i) The excess described in § 1.412(c)(3)-2(d)(2) multiplied by a fraction (not greater than 1), the numerator of which is the number of participants in the year of the credit and the denominator of which is the number of participants in the year of the change, or, at the option of the plan,

(ii) The excess (if any) in the year of credit of—

(A) The net charge to the funding standard account based on the new method, over

(B) The net charge to the funding standing account based on the prior method.

(4) *Computational rules.* For purposes of the calculation described in § 1.412(c)(3)-2(d)(3)(ii), the net charge is the excess of charges under section 412(b)(2) (A) and (B) over the credits under section 412(b)(3)(B) (including the

charge or credit described in § 1.412(c)(3)-2(c)) which would be required using the actuarial assumptions and plan benefit structure in effect on the last day of the plan year of change.

(5) *Fifteen-year amortization of credits.* The funding standard account shall be charged with 15-year amortization of each credit described in § 1.412(c)(3)-2(d) (2) and (3) beginning in the year following each such credit.

(6) *Manner of election.* An election under this paragraph shall be made by the claiming of the credits described in § 1.412(c)(3)-2(d) (2) and (3) on Schedule B to Form 5500 and by filing such other information as may be required by the Commissioner.

(e) *Effect on shortfall method.* The charges and credits described in this section apply in the shortfall method to the annual computation charge described in § 1.412(c)(1)-2(d). The amounts described in § 1.412(c)(3)-2(d) shall be determined before the application of the shortfall method.

This Treasury decision is issued under the authority of section 3(31) of the Employee Retirement Income Security Act of 1974 (88 Stat. 837; 29 U.S.C. 1002) and section 7805 of the Internal Revenue Code of 1954 (68A Stat. 917; 26 U.S.C. 7805).

William E. Williams,

Acting Commissioner of Internal Revenue.

Approved: December 23, 1980.

Emil M. Sunley,

Acting Assistant Secretary of the Treasury.

[FR Doc. 80-40627 Filed 12-29-80; 8:45 am]

BILLING CODE 4830-01-M

---

26 CFR Part 1

[T.D. 7745]

Income Tax; Taxable Years Beginning After December 31, 1953; Continuity of Business Enterprise Requirement for Corporate Reorganizations

AGENCY: Internal Revenue Service, Treasury.

ACTION: Treasury decision.

SUMMARY: This document contains final regulations clarifying the continuity of business enterprise requirement for corporate reorganizations. The continuity of business enterprise requirement is fundamental to the notion that tax-free reorganizations merely readjust continuing interests in property. Recent developments involving the availability of tax-free reorganization treatment for certain mutual fund transactions require clarification, in general, of the continuity of business enterprise requirement.

DATE: The amendments are effective for acquisitions occurring after January 30, 1981.

FOR FURTHER INFORMATION CONTACT: Raymond W. McKee of the Legislation and Regulations Division, Office of Chief Counsel, Internal Revenue Service, 1111 Constitution Ave., N.W., Washington, D.C. 20224, Attention: CC:LR:T (202-566-3458 not a toll-free number).

SUPPLEMENTARY INFORMATION:

Background

On December 28, 1979, the Federal Register published proposed amendments to the Income Tax Regulations (26 CFR Part 1) under section 368 of the Internal Revenue Code of 1954 (44 FR 76813). On the date of publication of the proposed regulation, the Internal Revenue Service also published three documents in the Internal Revenue Bulletin. First, Rev. Rul. 79-434, 1979-2 C.B. 155, held that a transaction that is in effect a purchase is not a reorganization. Second, Rev. Rul. 63-29, 1963-1 C.B. 77, was suspended by Rev. Rul. 79-433, 1979-2 C.B. 155, pending revision. Third, the Service's list of no ruling areas contained in Rev. Proc. 79-14, 1979-1 C.B. 496, was amended by Rev. Proc. 79-68, 1979-2 C.B. 600, to prospectively include transactions that violate the continuity of business enterprise requirement as set forth in the proposed regulation. These amendments were proposed to clarify the requirement of continuity of business enterprise in corporate reorganizations.

A public hearing was held on March 18, 1980. After considering all comments regarding the proposed amendments, those amendments (as revised) are adopted by this Treasury decision.

General Description of Regulation

The regulation sets forth certain basic concepts underlying the continuity of business enterprise requirement. Continuity of business enterprise requires that the transferee (*P*) either continue the transferor's (*T*'s) historic business or use a significant portion of *T*'s historic business assets. *P* is not required to continue *T*'s business. However, there must be significant use of *T*'s historic business assets in *P*'s business.

The facts of the examples in the regulation are based, in large part, upon administrative rulings and judicial opinions. Example (1), which is based on *Lewis v. Commissioner*, 176 F.2d 646 (1st Cir. 1949), shows that continuity of business enterprise requires only that *P* continue one of the significant lines of *T*'s business. Example (2), which is based on *Atlas Tool Co. v. Commissioner*, 70 T.C. 86 (1978), *aff'd* 614 F.2d 860 (3d Cir. 1980), *cert. denied*, — U.S. — (1980), shows that continuity of business enterprise may exist even if *P*'s use of *T*'s assets differs from *T*'s use of those assets.

Example (3) shows that stocks and bonds acquired following the sale of *T*'s historic business as part of a plan of reorganization are not *T*'s historic business assets. *Compare Lester J. Workman*, T.C. Memo 1977-378.

The facts in example (4) are a variation of those in Rev. Rul. 63-29, 1963-1 C.B. 77, although the example reaches a different result. This transaction is not a mere purchase by *T* of *P* stock because *T* receives third party notes which are not cash equivalents. Example (5) shows that a disposition of *T*'s assets by *P* does not differ in result from a disposition of those assets by *T*.

For purposes of issuing advance letter rulings, the Service will determine on a case-by-case basis the portion of a transferor's total assets considered to be "significant" and determine whether a line of business is "significant".

Discussion of Major Comments and Changes

The major comments on the proposed regulation may be divided into three categories:

(1) The proposed regulation reflects unsound tax policy.

(2) The proposed regulation is not legally supportable.

(3) The proposed regulation, if adopted, should be revised to eliminate ambiguities and avoid unintended consequences.

Overall Policy Considerations

A number of taxpayers submitting comments argued that the proposed regulation is inconsistent with the underlying policy of the reorganization provisions since it requires *T*'s shareholders to recognize gain even though the shareholders continue their investment in corporate solution. They suggest that the appropriate time to tax *T*'s shareholders is when they "cash in" their investment through a sale or other taxable disposition of the *P* stock received in the transaction. Similarly, they argue that it is inappropriate to require gain recognition at the shareholder level merely because of a change in asset composition at the corporate level.

Under the general rule of section 1001 (c), an exchange of stock or securities requires recognition of gain or loss unless the exchange falls within the precise specifications of a

nonrecognition provision in the Internal Revenue Code (Code). Nonrecognition is accorded only if the exchange satisfies the underlying purpose of the exception as well as the specific description of the excepted exchange. *See* § 1.1002-1(b). The relationship of the exchange to the venture or enterprise is always material. *Id.*

Section 1031 of the Code, which permits deferral of recognition on the exchange of certain property, expressly excludes an exchange of corporate stock or securities. Similarly, section 1036, which applies to an exchange of stock, permits deferral only when stock is exchanged for stock in the same corporation.

An exception to the general rule of gain or loss recognition is contained in the reorganization provisions—sections 354 through 368—of the Code. As stated in § 1.1002-1 (c), the underlying assumption of any tax-free exchange "is that the new property is substantially a continuation of the old investment still unliquidated" and, with respect to corporate reorganizations, nonrecognition results because "the new enterprise, the new corporate structure, and the new property are substantially continuations of the old still unliquidated." *See generally,* Bittker and Eustice, *Federal Income Taxation of Corporations and Shareholders,* ¶ 14.01 at 14-4 (4th ed. 1979).

The courts have long recognized that a tax-free reorganization presupposes that *T*'s shareholders retain a material proprietary interest in *P* (continuity of interest). *See, e.g., LeTulle v. Scofield,* 308 U.S. 415 (1939); *Helvering v. Bashford,* 302 U.S. 454 (1938); *Groman v. Commissioner,* 302 U.S. 82 (1937); *Helvering v. Minnesota Tea Co.,* 296 U.S. 378 (1935); *Pinellas Ice and Cold Storage Company v. Commissioner,* 287 U.S. 462 (1933); *Southwest Natural Gas Co. v. Commissioner,* 189 F.2d 332 (5th Cir. 1951), *cert. denied,* 342 U.S. 860 (1951); *Cortland Specialty Co. v. Commissioner,* 60 F.2d 937 (2d Cir. 1932), *cert. denied,* 288 U.S. 599 (1933). A necessary corollary to this continuity of interest requirement is that the interest retained represent a link to *T*'s business or its business assets. The continuity of business enterprise requirement ensures that tax-free reorganizations effect only a readjustment of the *T* shareholders' continuing interest in *T*'s property under a modified corporate form. *See,* § 1.368-1(b). Absent such a link between *T*'s shareholders and *T*'s business or assets there would be no reason to require *T*'s shareholders to retain a continuing stock interest in *P*. If the shareholders' link to *T*'s business or its assets is broken by, for example, a sale of *T*'s business to an unrelated party, as part of the overall plan of reorganization, the interest received in *P* is no different than an interest in any corporation. An exchange of stock without a link to the underlying business or business assets resembles any stock for stock exchange and, as such, is a taxable event. Thus, it is not enough that the shareholder's investment remains in corporate solution. *See Hendee v. Commissioner,* 98 F.2d 934 (7th Cir. 1938).

Additionally, several taxpayers argued that the proposed regulation is inconsistent with the policy of the reorganization provisions in that it requires two levels of tax. They pointed out that if the corporation's assets are sold to an unrelated party, tax is paid at the corporate level; and if reorganization treatment is denied on the subsequent stock exchange, a tax is imposed also at the shareholder level on the appreciation in the shareholders' stock.

In general, two levels of tax are imposed upon a corporate liquidation. However, if the requirements of the Code are met, only one level of tax may be imposed. This tax would be imposed at the shareholder level, not the corporate level, upon the liquidation of a corporation. *See* sections 331-337. The regulation does not alter this policy. If the requirements of section 337 are met, gain or loss is not recognized, in general, at the corporate level on the disposition of assets. However, as with other similar transactions, gain or loss is recognized, in general, by the shareholders under the liquidation provisions.

Regulation Not Legally Supportable

Most taxpayers submitting comments contended there is no existing judicial authority for the "historic business/assets" limitation in the proposed regulation. They argue primarily on the basis of *Becher v. Commissioner,* 22 T.C. 932 (1954), *aff'd,* 221 F.2d 252 (2d Cir. 1955), that continuity of business enterprise requires only that *P* engage in some business activity after the transaction and that *T*'s shareholders continue their investment in corporate form.

Thus, it is their contention that it is sufficient if *T*'s assets, or the proceeds from the sale of those assets, are used by *P* in a business. Although *Becher* supports the contention made in the comments, there is substantial authority supporting the premise of the regulation that a transaction is not a tax-free reorganization if there is no continuing nexus between the shareholders and their former business or assets.

A. *Generally accepted principles*

The courts have agreed that *P* must not be formed merely to dispose of *T*'s assets. *See, e.g., Standard Realization Co. v. Commissioner,* 10 T.C. 708 (1948), *acq.* 1948-2 C.B. 3; *Graham v. Commissioner,* 37 B.T.A. 623 (1938), *acq.* 1938-2 C.B. 13; *see also Mitchell v. United States,* 451 F.2d 1395 (Ct. Cl. 1971). However, the courts also have agreed, in general, that continuity of business enterprise does not require *P* to carry on the same business conducted by *T*. *See, e.g., Atlas Tool Co. v. Commissioner,* 614 F.2d 860 (3d Cir. 1980), *aff'g* 70 T.C. 86 (1978), *American Bronze Corp. v. Commissioner,* 64 T.C. 1111 (1975); *Bentsen v. Phinney,* 199 F. Supp. 363 (S.D. Tex 1961); *Becher v. Commissioner, supra.*

B. *Becher*

In *Becher, T* manufactured canvas supplies for the Armed Forces. After World War II, *T* decided to terminate its canvas supply business and enter the upholstery business. Shortly after *T* began to dispose of its canvas supply business, *T*'s shareholders organized *P* which acquired substantially all of *T*'s remaining operating assets. After *P* completed liquidating the canvas supply business, *T* dissolved and distributed substantial cash. The Commissioner argued that there was a reorganization based on the liquidation-reincorporation doctrine and asserted that the cash distribution was boot taxable as a dividend. The court held that the transfer of assets was a reorganization. The court reasoned that continuity of business enterprise does not require *P* to continue *T*'s business; rather it is sufficient if *P* is engaged in some business.

C. *Limited support for Becher view*

Becher is the strongest case in support of the rule advocated by most taxpayers submitting comments. However, only one other case—*Bentsen v. Phinney, supra,* a 1961 District Court decision—has held that continuity of business enterprise may be satisfied merely by the use by *P* of the proceeds of the sale of *T*'s assets in a business.

In *Bentsen, P,* a newly-formed life insurance company, acquired all the assets of three land development companies. The court upheld the taxpayer's contention that the continuity of business requirement was met. The court reasoned that continuity does not require *P* to engage in the same or similar business as *T*, and that *P* need only engage in some business activity. Although the facts do not indicate whether *P* actually used a significant

portion of *T*'s assets (land) in its business, or merely used the proceeds form their sale, the differences in business activity and the finding that the land furnished "the means to capitalize" the insurance business indicates the latter. *Cf. Morley Cypress Trust v. Commissioner*, 3 T.C. 84 (1944), *acq.* 1944 C.B. 20.

A case cited as fully embracing *Becher*, *United States v. Adkins-Phelps Inc.*, 400 F.2d 737 (8th Cir. 1968), is more limited on its facts. The court in *Adkins-Phelps* rejected the Goverment's contention that the continuity of business enterprise requirement was not met, stating that *P* need only continue to carry on some business activity. However, the court also found that *T* did not sell substantially all of its business assets, that the business was resumed before the meger, and that *T*'s brand name products (which presumably were acquired by *P*) had wide acceptance in the area in which *P* operated.

Other cases *Becher* cites are similarly distinguishable. Thus, in *Pebble Springs Distilling Co., v. Commissioner*, 23 T.C. 196 (1954), *aff'd*, 231 F.2d 288 (7th Cir. 1956) *cert. denied*, 352 U.S. 836 (1956), *T*, a whiskey distiller, distributed its inventory of whiskey to its shareholders. *T* sold its plant, machinery, goodwill, and other operating assets to *P*, a related corporation, which was empowered to manufacture whiskey and conduct real estate activities. The court upheld the Commissioner's assertion that the transfer of the operating assets from *T* to *P* was a reorganization. Although the court cited *Becher*, in this case a substantial portion of *T*'s operating assets were used by *P* as rental property in a real estate business.

Similarly, in *American Bronze Corp., supra*, *P* manufactured and sold bronze castings for plumbing fixtures ("jobbing") and *T* manufactured and sold finished cast products ("product line"). Before the merger of *T* into *P*, *T* entered the jobbing business and sold its product line assets to an unrelated party. The facts indicate that there was no plan to merge *T* into *P* at the time *T* entered the jobbing business. The court upheld the taxpayer's contention that a reorganization occurred. Although the court cites *Becher* for the view that the continuing business need not be the same as the business conducted by *T*, *P* in fact continued *T*'s jobbing line of business.

D. *Case Authority for Regulation*

A number of cases subsequent to *Becher*, including decisions of the Tax Court, have recognized the principles set forth in the regulation. In *Pridemark v. Commissioner*, 345 F.2d 35 (4th Cir. 1965), *T* terminated its business, sold substantially all of its assets, and distributed the proceeds and its remaining assets in liquidation. The court found that at the time of the sale of *T*'s assets the T shareholders did not intend to revive *T*'s business. After several unsuccessful investments, the *T* shareholders reincorporated into *P*. Only an insignificant portion of *T*'s assets were transferred to *P*. Shortly after *T*'s liquidation, *P* engaged in a similar line of business. The court in holding that there was a complete liquidation of *T* did not consider conduct by *P* of a business similar to *T*'s as sufficient evidence to reach a contrary result.

In *Mitchell v. United States*, 451 F.2d 1395 (Ct. Cl.1971), *P* and *T*, which were commonly owned, engaged in similar businesses. *P* acquired *T*'s assets after *T*'s last contract was cancelled. *P* intended to sell *T*'s assets promptly because *T*'s business was in Libya and *P*'s was in Australia. Thus, *P* began to sell *T*'s assets, selling nearly all of them within approximately 6 months. For a short time after *P* acquired *T*'s assets, *P* conducted small amounts of business with *T*'s equipment and two of *T*'s employees.

In deciding whether a liquidation or reorganization had occurred, the relevant inquiry for the court in *Mitchell* was whether *T*'s business was discontinued or was continued by *P* as a going concern. The court found that after the transfer *P* carried on its own business and did not continue *T*'s. The court cited *Pridemark* in holding that the transaction constituted a liquidation. The fact that after the transfer *P* was engaged in business, or may have used the proceeds from the sale of *T*'s assets in its business, did not indicate reorganization treatment.

Similarly, in *Wortham Machinery Co. v. United States*, 521 F.2d 160 (8th Cir. 1975), *T* transferred all of its assets to *P*. The court found that *P* acquired *T*'s assets with the intent to liquidate them. The court took the position that there was no continuity of business enterprise since "liquidation of assets is not continuation of a business enterprise," 521 F.2d at 163.

Two recent Tax Court cases are also consistent with the regulation. In *Atlas Tool Co. v. Commissioner*, 70 T.C. 86 (1978), *aff'd*, 614 F.2d 860 (3d Cir. 1980), *cert. denied*,—U.S.—(1980), *T* supplied *P* with components for *T*'s model train manufacturing business. *P* and *T* were commonly owned. In 1959, *P* began to rely on foreign suppliers for components and use *T* only as a backup source of supply. In 1969, the decision was made to transfer *T*'s operating assets to *P* for cash and liquidate *T*. *P* did not want to use the assets immediately but wanted to continue relying on them as a backup source of supply. Problems with foreign suppliers developed three months after the transfer, and *P* began to use *T*'s assets. The Tax Court held, and the Third Circuit affirmed, that the transfer of assets was a reorganization and not a liquidation.

Although the Tax Court in *Atlas Tool* cited *Becher* for the view that *P* need only engage in some business activity, it stated that *P* had "used" *T*'s assets even while inactive to reduce the risks of business. 70 T.C. at 104. Example (2) of the final regulation is based on the Tax Court opinion in *Atlas*.

In affirming the Tax Court, the Third Circuit stated that the focus of the nonstatutory requirements for a reorganization is "whether the new corporation carries forward the business enterprise of the old." 614 F.2d at 867. The court reasoned that *P* had continued substantially the same business conducted by *T* (*i.e.*, a backup supplier of components). The court cited *Becher* only for the limited proposition that continuity of business enterprise does not require the continuing business to be identical to the one conducted by *T*. The final regulation does not require that *P* conduct even substantially the same business. Rather, the continuity of business enterprise requirement is met under the final regulation if *P* uses *T*'s assets in any business.

The most recent Tax Court pronouncement on this subject is *Laure v. Commissioner*, 70 T.C. 1037 (1978), *Appeal docketed*, Nos. 79-1231/1232 (6th Cir. Feb. 27, 1979). In *Laure*, *P* manufactured plastics and plastic molding and *T* conducted an air charter business. *T* was insolvent. *T* contracted to sell its assets and merged into *P*. Some assets were sold prior to the merger and the remaining assets were sold by *P* after the merger under preexisting contracts of sale. For the two separate but related reasons that the transaction lacked a business purpose and continuity of business enterprise, the court rejected the taxpayer's assertion that the transaction was a reorganization. The court, citing *Becher* and *American Bronze Corp., supra*, stated that continuity of business enterprise does not mean that the continuing business must be the same as the one conducted by the transferor. 70 T.C. at 1103. However, the court stated that "[i]f the transferor's business is not continued there must be some use of the transferor's assets in the transferee's business." *Id.* The court added that continuity of business enterprise is

lacking if *P* merely is to dispose of *T*'s assets in a termination of *T*'s business. Thus, even though *P* continued its business activity, the court held that there was a liquidation of *T* and not a reorganization.

Laure and *Atlas* suggest that merely continuing business activity is insufficient. The final regulation reflects the emphasis in *Laure* and *Atlas* on continuing either *T*'s business or using *T*'s assets in a different business.

E. *"Historic" concept based on step transaction principles*

The regulation requires a continuing link between *T*'s shareholders and *T*'s business or assets. The examples in the regulation illustrate that the transfer of sale proceeds is not sufficient. It follows that it is not sufficient to transfer assets acquired with the sale proceeds as part of a plan of reorganization. The proposed regulation referred to *T*'s business and business assets immediately prior to the first step of an overall plan intended to result in a reorganization as *T*'s "historic" business/assets. Taxpayers submitting comments criticized the "historic" business/asset concept as legally unprecedented. However, this concept is intended to merely incorporate established step-transaction principles.

The essence of the step transaction doctrine is that an "integrated transaction must not be broken into independent steps or, conversely, that the separate steps must be taken together in attacking tax consequences." *King Enterprises v. United States*, 418 F. 2d 511 (Ct. Cl. 1969), *quoting* Bittker and Eustice, *Federal Income Taxation of Corporations and Shareholders* 18 (1966).

The rationale set forth in the opinion of Judge Raum in *Lester J. Workman*, T.C. Memo. 1977–378 clearly enunciates the principles used by the courts in applying the step transaction doctrine to determine whether a series of steps constitute a single plan of reorganization. In *Workman*, *T* rented land, buildings, and fixtures to a sister corporation engaged in the chemical manufacturing business. *T* sold its operating assets to the chemical manufacturing corporation for a note and mortgage. *T* liquidated, but within a short period of time *T*'s former shareholder *A* organized *P* to give *A* a corporate identity in seeking out new business opportunities. Shortly thereafter, *A* transferred to *P* the note and mortgage distributed in liquidation of *T*. After a year of inactivity, *P* engaged in several unsuccessful business ventures. The court upheld the taxpayer's contention that the sale by *T* of its operating assets was tax free under section 337 because the sale was pursuant to a liquidation and not a reorganization.

The Commissioner argued that if the court compared *P* to *T* as *T* existed after sale of its operating assets there was a reorganization because *P* continued the same activity (*i.e.*, holding the note and mortgage) conducted by *T* after the sale. The court held, however, that *P* must be compared with *T* as *T* existed prior to the sale of its assets. Thus, under the court's analysis there was a liquidation because *P* did not acquire any of *T*'s former assets (*i.e.*, land, building, and fixtures) or continue *T*'s former business. Rather, *T* transferred only the proceeds from the sale of those assets.

Judge Raum contrasted the situation in *Workman* with the one in *Abegg v. Commissioner*, 429 F. 2d 1209 (2d Cir. 1970), *aff'g* 50 T.C. 145 (1968), *cert. denied*, 400 U.S. 1008 (1971), which was cited in several comments as authority for the proposition that changes in the nature of *T*'s business or assets do not preclude a subsequent transfer of the remaining assets from qualifying as a reorganization. In *Abegg*, *T* sold all of its operating assets for stock and other liquid securities. *T* operated as a personal holding company managing the portfolio of liquid securities. After two years *T* distributed its portfolio to its sole shareholder *A*. *A* incorporated *P* and transferred the portfolio to it.

The court in *Abegg* upheld the Commissioner's assertion that the liquidation and reincorporation were in substance a reorganization. The crucial factor distinguishing *Abegg* from *Workman* is that in *Abegg* the sale of *T*'s former operating assets was not part of the plan that encompassed the liquidation and reincorporation. Thus, in *Abegg* the portfolio became *T*'s operating assets for purposes of determining continuity of business enterprise. However, no inference should be drawn that in *Abegg* a significant portion of *T*'s assets were transferred to *P*.

The "historic" business/asset concept is merely an expression of the distinction made by Judge Raum in applying these step transaction principles. The assets transferred by *T* in *Workman* were not *T*'s "historic" business assets. On the other hand, the assets transferred by *T* in *Abegg* were *T*'s "historic" business assets.

F. *Relation to section 368(a)(2)(F)*

Several taxpayers submitting comments argued that the regulation is inconsistent with section 368(a)(2)(F) to the extent it affects investment company reorganizations. Their argument is that Congress expressly rejected a proposal in 1976 to totally deny reorganization treatment for transactions involving investment companies. *See*, Hearing Before the Ways and Means Committee on H.R. 11920, *Taxation of Exchange (Swap) Fund Capital Gains*, 94th Cong., 2d Sess. (March 29, 1976). Instead, Congress enacted section 368(a)(2)(F) which limits reorganization treatment only for undiversified investment companies. Thus, they conclude that Congress intended section 368(a)(2)(F) to be the exclusive limitation on reorganizations of investment companies and that any further limitation requires legislative action.

The determination of whether a transaction qualifies as a reorganization requires a three-step analysis. First, the transaction must be described in section 368(a)(1) and meet the literal requirements of that section. Special rules apply under section 368(a)(2)(A) through (E) in making that determination. Second, the transaction must be tested under section 368(a)(2)(F). Third, a transaction that meets the literal requirements section 368(a)(1), and is not denied reorganization treatment under section 368(a)(2)(F), must in substance comply with the judicial doctrines that ensure transactions comply with the purposes and underlying assumptions of a reorganization. See § 1.368–1(b). Although Congress has amended the reorganization provisions several times, it has never relieved the courts of this "watchdog function". Bittker and Eustice, *Federal Income Taxation of Corporations and Shareholders* (4th ed. 1979) ¶ 1403 at 14–11.

The continuity of business enterprise requirement applies to reorganizations involving all taxpayers, not only those involving investment companies. The examples in the regulations involving investment companies are not directed at those taxpayers alone but are illustrative of generally applicable principles.

Congress in enacting section 368(a)(2)(F) intended only to limit tax-free diversification. Nothing in the legislative history of section 368(a)(2)(F) either indicates that Congress intended to eliminate any of the judicial doctrines restricting reorganization treatment or implies that all investment company transactions satisfy those judicial requirements. Thus, transactions that are not denied reorganization treatment under section 368(a)(2)(F) must satisfy all of the underlying assumptions of a reorganization, including continuity of business enterprise.

Suggested Revisions

Taxpayers suggested that the proposed regulation, if adopted, be revised to eliminate the "historic" concept and clarify the scope and application of the proposed regulation. Although the final regulation contains the "historic" business/asset concept, several clarifying revisions have been made.

A. *Effective date*

The effective date has been clarified to take into account an exchange of stock described in section 368(a)(1)(B). The proposed regulation focused on the date of "transfer" as defined in § 1.381 (b)-1(b). That term does not include "B" reorganizations, which are subject to the continuity of business enterprise requirement. Thus, the final regulation contains a special effective date for purported "B" reorganizations.

The terms "transferor" and "transferee" were replaced with the terms "acquiring corporation" and "acquired corporation" to indicate that the continuity of business enterprise requirement applies to a "B" reorganization, which does not involve a transfer. For convenience, the acquiring corporation is referred to as *P* and the acquired corporation is referred to as *T*.

B. *General rule*

Taxpayers suggested clarification of the treatment of mergers of holding companies. The Service will indicate by ruling how the general rule applies to these transactions and other similar transactions.

C. *"Historic" business/assets*

1. *Overall Plan.* The proposed regulation provided that a corporation's "historic" business is not one the corporation enters into as part of an overall plan intended to result in a reorganization. The intent of this language was to make it clear that under established step transaction principles the continuity of business enterprise test does not necessarily focus on the business conducted immediately before the acquisition by *P*. The term "overall plan intended to result in a reorganization" was used instead of "plan or reorganization" because the transaction may not result in a tax-free reorganization (*e.g.*, if it failed the continuity of business enterprise test). However, the final regulation uses the term "plan of reorganization" which has been used traditionally by the courts in applying step transaction principles.

2. *Significance or business of assets.* The final regulation is clarified to indicate that all facts and circumstances are considered in determining whether a line of business or the portion of assets transferred is significant.

D. *Examples*

A number of taxpayers submitting comments argued that the implication of example (3) was that any assets acquired by *T* before the acquisition by *P* would never be historic business assets if acquired by *T* with the proceeds of the sale of former operating assets. Some taxpayers also suggested the regulation confirm that under appropriate circumstances investment activity may constitute an historic business for purposes of continuity of business enterprise. It was argued further that it is unrealistic to ascribe all steps occurring with a 3½ year period to a single plan.

Example (3) is intended to illustrate the general principle that a reorganization will not result if *T* transfers assets acquired with the proceeds of a sale of *T*'s former operating assets as part of an overall plan. The existence of the plan is determined under traditional step transaction principles. *See King Enterprises, Inc. v. United States*, 418 F. 2d 511 (Ct. Cl. 1969); Mintz and Plumb, Step Transactions in Corporate Reorganizations *NYU Inst. on Fed. Tax*, 247, 285 (1954); compare in the context of a section 355 transaction *Commissioner v. Gordon*, 391 U.S. 83 (1968). The lapse of time between steps is one factor in determining whether those steps were part of a plan of reorganization. However, all facts and circumstances must be considered. Example (3) merely assumes that all steps described were part of a plan of reorganization.

Example (3) is not intended to imply that stocks and securities acquired with the proceeds of the sale of manufacturing assets will never be historic business assets. Investment operations may constitute an historic business if the investment assets were not acquired as part of a plan of reorganization.

A number of taxpayers submitting comments complained that the regulation prevented any post-acquisition change in the business or assets acquired by *P* for an indefinite period. The final regulation clarifies that only dispositions by *P* pursuant to a plan are proscribed.

Effective Date

The final regulation relating to the continuity of business enterprise requirement is effective for transactions that occur after January 30, 1981. No inferences are intended regarding the law prior to the effective date of the final regulation.

Drafting Information

The principal author of this regulation is Richard L. Mull of the Legislation and Regulations Division, Office of Chief Counsel, Internal Revenue Service. However, personnel from other offices of the Internal Revenue Service and Treasury Department participated in developing the regulation, both on matters of substance and style.

Adoption of amendments to the regulation

Accordingly, 26 CFR Part 1 is amended as follows:

§ 1.368 [Removed]

Paragraph 1. Section 1.368 is removed.

Par. 2. § 1.368-1 is amended as follows:

1. "The continuity of business enterprise requirement is described in paragraph (d) of this section." is added immediately following the third sentence in paragraph (b).

2. A new paragraph (d) is added to read as set forth below:

§ 1.368-1 Purpose and scope of exception of reorganization exchanges.

* * * * *

(d) *Continuity of business enterprise*—(1) *Effective date.* (i) This paragraph (d) applies to acquisitions occurring after January 30, 1981.

(ii) For an asset acquisition, the date of acquisition is the date of transfer. To determine the date of transfer, see § 1.381 (b)-1 (b).

(iii) For a stock acquisition, the date of acquisition is the date on which the exchange of stock occurs. If all stock is not exchanged on the same date, the date of exchange is the date the exchange of all stock under the plan of reorganization is complete.

(2) *General rule.* Continuity of business enterprise requires that the acquiring corporation *(P)* either (i) continue the acquired corporation's (*T*'s) historic business or (ii) use a significant portion of *T*'s historic business assets in a business. The application of this general rule to certain transactions, such as mergers of holding companies, will depend on all facts and circumstances. The policy underlying this general rule, which is to ensure that reorganizations are limited to readjustments of continuing interests in property under modified corporate form, provides the guidance necessary to make these facts and circumstances determinations.

(3) *Business continuity.* (i) The continuity of business enterprise

requirement is satisfied if *P* continues *T*'s historic business. The fact *P* is in the same line of business as *T* tends to establish the requisite continuity, but is not alone sufficient.

(ii) If *T* has more than one line of business, continuity of business enterprise requires only that *P* continue a significant line of business.

(iii) In general, a corporation's historic business is the business it has conducted most recently. However, a corporation's historic business is not one the corporation enters into as part of a plan of reorganization.

(iv) All facts and circumstances are considered in determining the time when the plan comes into existence and in determining whether a line of business is "significant".

(4) *Asset continuity.* (i) The continuity of business enterprise requirement is satisfied if *P* uses a significant portion of *T*'s historic business assets in a business.

(ii) A corporation's historic business assets are the assets used in its historic business. Business assets may include stock and securities and intangible operating assets such as good will, patents, and trademarks, whether or not they have a tax basis.

(iii) In general, the determination of the portion of a corporation's assets considered "significant" is based on the relative importance of the assets to operation of the business. However, all other facts and circumstances, such as the net fair market value of those assets, will be considered.

(5) *Examples.* The following examples illustrate this paragraph (d).

Example (1). *T* conducts three lines of business: manufacture of synthetic resins, manufacture of chemicals for the textile industry, and distribution of chemicals. The three lines of business are approximately equal in value. On July 1, 1981, *T* sells the synthetic resin and chemicals distribution businesses to a third party for cash and marketable securities. On December 31, 1981, *T* transfers all of its assets to *P* solely for *P* voting stock. *P* continues the chemical manufacturing business without interruption. The continuity of business enterprise requirement is met. Continuity of business enterprise requires only that *P* continue one of *T*'s three significant lines of business.

Example (2). *P* manufactures computers and *T* manufactures components for computers. *T* sells all of its output to *P*. On January 1, 1981, *P* decides to buy imported components only. On March 1, 1981, *T* merges into *P*. *P* continues buying imported components but retains *T*'s equipment as a backup source of supply. The use of the equipment as a backup source of supply constitutes use of a significant portion of *T*'s historic business assets, thus establishing continuity of business enterprise. *P* is not required to continue *T*'s business.

Example (3). *T* is a manufacturer of boys' and men's trousers. On January 1, 1978, as part of a plan of reorganization, *T* sold all of its assets to a third party for cash and purchased a highly diversified portfolio of stocks and bonds. As part of the plan *T* operates an investment business until July 1, 1981. On that date, the plan of reorganization culminates in a transfer by *T* of all its assets to *P*, a regulated investment company, solely in exchange for *P* voting stock. The continuity of business enterprise requirement is not met. *T*'s investment activity is not its historic business, and the stocks and bonds are not *T*'s historic business assets.

Example (4). *T* manufactures children's toys and *P* distributes steel and allied products. On January 1, 1981, *T* sells all of its assets to a third party for $100,000 cash and $900,000 in notes. On March 1, 1981, *T* merges into *P*. Continuity of business enterprise is lacking. The use of the sales proceeds in *P*'s business is not sufficient.

Example (5). *T* manufactures farm machinery and *P* operates a lumber mill. *T* merges into *P*. *P* disposes of *T*'s assets immediately after the merger as part of the plan of reorganization. *P* does not continue *T*'s farm machinery manufacturing business. Continuity of business enterprise is lacking.

This Treasury Decision is issued under the authority contained in section 7805 of the Internal Revenue Code of 1954 (68A Stat. 917; 26 U.S.C. 7805).

William E. Williams,
Acting Commissioner.

Approved: December 23, 1980.

Emil M. Sunley,
Acting Assistant Secretary of the Treasury.

[FR Doc. 80-40628 Filed 12-29-80; 8:45 am]
BILLING CODE 4830-01-M

---

26 CFR Part 1

[T.D. 7747]

Income Tax; Taxable Years Beginning After December 31, 1953; Treatment of Certain Interests in Corporations as Stock or Indebtedness

AGENCY: Internal Revenue Service, Treasury.

ACTION: Final regulations.

SUMMARY: This document contains final regulations relating to the treatment of certain interests in corporations as stock or indebtedness. The Tax Reform Act of 1969 authorized the Secretary of the Treasury to prescribe such regulations. This document also contains conforming regulations relating to the allocation of income and deductions among taxpayers and certain other matters. The regulations affect corporations and their shareholders and creditors.

DATES: The regulations generally apply to certain interests in corporations created after April 30, 1981.

FOR FURTHER INFORMATION CONTACT: Jack A. Levine of the Legislation and Regulations Division, Office of the Chief Counsel, Internal Revenue Service, 1111 Constitution Avenue, N.W., Washington, D.C. 20224 (Attention: CC:LR:T, 202-566-3458, not a toll-free call).

SUPPLEMENTARY INFORMATION:

Background

On March 24, 1980, the Federal Register published proposed amendments to the Income Tax Regulations (26 CFR Part 1) under sections 166, 385, 482, and 1371 of the Internal Revenue Code of 1954 (45 FR 18957). These amendments were proposed to conform the regulations to section 415(a) of the Tax Reform Act of 1969 (83 Stat. 613). After consideration of all comments from interested persons regarding the proposed regulations, they are adopted as revised by this Treasury decision.

Explanation of Changes

In response to the many thoughtful and constructive public comments, a number of changes have been made in the proposed regulations. In general, as a result of these changes, the final regulations are of more limited scope than the proposed regulations and should not interfere with the normal operations of small business investment companies, commercial lenders or other independent creditors. For example, straight debt instruments not held proportionately by shareholders (e.g., bank loans) will never be treated as stock under the final regulations.

The more important changes in the proposed regulations are discussed below. In addition, the reasons for not making certain other suggested changes are also discussed below. Some comments raised legitimate questions of interpretation of relatively narrow interest that would be more appropriately addressed by revenue rulings. It is expected that most of these points will ultimately be covered by revenue rulings.

This "Explanation of Changes" supplements the "Supplementary Information" contained in the notice of proposed rulemaking published in the Federal Register on March 24, 1980.

Section 1.385-1 Effective Date and Scope

As proposed on March 24, 1980, the regulations would have applied to certain interests in corporations created after December 31, 1980. However, to provide both additional time for the public to become familiar with the regulations and the opportunity for further public comment, the final regulations generally will apply to

certain interests in corporations created after April 30, 1981. Present law will continue to apply to interests created on or before April 30, 1981.

Thus, although the regulations are adopted in final form, there is a substantial period before they become effective. The Treasury and the Internal Revenue Service invite additional comments on the final regulations during this period.

An exception to the effective date has been added for interests created pursuant to written contracts which are binding on December 29, 1980 and at all times thereafter. This exception applies, for example, to interests issued after the effective date of the regulations but pursuant to a plan of reorganization that had been approved by the shareholders of the parties to the reorganization prior to December 29, 1980, and that was thereafter binding on such parties, subject only to customary third party approvals and other customary third party conditions.

An exception to the effective date has also been added for certain bankruptcy reorganizations. Because bankruptcy reorganizations often involve protracted judicial proceedings, the regulations will not apply to interests created pursuant to a plan of bankruptcy filed before December 29, 1980.

The regulations under section 385 do not apply to an instrument issued before the effective date even if, after the effective date, there is a failure to pay interest or principal when due, the terms of the instrument are changed, or the instrument is a demand note not bearing interest at a reasonable rate.

On the other hand, if an instrument is issued prior to the regulations' effective date but its terms are changed after the effective date, and the change in terms is sufficiently substantial to be considered an exchange of instruments under applicable principles of tax law, then the instrument with the changed terms will be treated as newly issued after the effective date for purposes of the section 385 regulations.

Some comments seemed to assume (incorrectly) that an interest will be treated as indebtedness if it is outside the scope of the regulations. Actually, existing law will continue to apply in these cases. Language has been added to clarify this point (see § 1.385-1(b)(1)).

Certain other sections of the Internal Revenue Code make distinctions that are similar to (but not the same as) the one between stock and indebtedness. Section 385 does not necessarily govern these distinctions. Language has been added to clarify this point (see § 1.385-1(b)(2)).

Section 1.385-2 Summary of Rules

Only conforming changes and minor clarifications have been made in the summary of rules.

Section 1.385-3 Preliminary Rules

Section 1.385-3(a) provides that if a corporation sells an instrument to a shareholder for more or less than its fair market value, the difference is treated as a contribution to capital or as a section 301 or 305 distribution, as the case may be.

Some comments expressed the view that the scope of the term "shareholder" in this context was unclear because there was no explicit reference to attribution rules. However, as pointed out in the preamble to the proposed regulations, the regulations are not intended to deviate from present law as to when a bargain sale to a nonshareholder may be treated as a dividend (see *Harry L. Epstein*, 53 T.C. 459 (1969); *Sammons v. United States*, 433 F. 2d. 728 (5th Cir. 1970), *cert. denied* 402 U.S. 945 (1971); *George W. Knipe*, 24 CCH Tax Ct. Memo 668 (1965), *Aff'd per curiam sub nom. Equitable Publishing Co. v. Commissioner*, 356 F. 2d. 514 (3d. Cir. 1966), *cert. denied* 385 U.S. 822 (1966); Rev. Rul. 69-630, 1969-2 Cum. Bull. 112) or as to how purchases by nonshareholders at prices in excess of fair market value are treated.

A provision has been added enabling the Commissioner to disregard a noncommercial term of an instrument, in determing the fair market value of the instrument or the reasonableness of an interest rate, if the principal purpose of the term is to increase or decrease the instrument's fair market value or reasonable rate of interest (see § 1.385-3 (b) (1) (iii). Although this result can also be reached under section 482, it was believed appropriate to cover this point explicitly in the section 385 regulations. This provision would apply, for example, as follows. Assume that a corporation issues an instrument bearing an extremely high interest rate to its sole shareholder, a nonresident alien. Assume further that the instrument contains certain noncommercial terms which would make it very difficult for the holder to enforce his rights thereunder and which were designed to reduce the fair market value of the instrument for tax purposes. This provision enables the Commissioner to disregard these noncommercial terms in determing the fair market value of the instrument and the reasonableness of the interest rate.

Section 1.385-4 Instruments Generally

The regulations provide that if an instrument is treated as stock under section 385, then the instrument is treated as preferred stock for all purposes of the Internal Revenue Code. Such preferred stock is considered to have the same terms (*e.g.*, voting rights) as the instrument has under applicable local law. Also, each class of instruments classified as preferred stock is treated as a separate class of preferred stock. Language has been added to clarify these points (see § 1.385-4(c)(1)(i)).

The regulations also provide that, if an instrument becomes stock under the rules of § 1.385-6 (j), (k) or (l), the instrument is treated as having been exchanged (without recognition of gain or loss) for preferred stock in a recapitalization to which section 368(a)(1)(E) applies. Since the intent is to treat the exchange as taxfree, the exchange is also considered to satisfy section 354(a)(1) (*i.e.*, the instrument is treated as a security for this purpose).

Section 1.385-5 Hybrid Instruments

Several comments exhibited some confusion about the meaning of a "definitely ascertainable" interest rate or principal sum. In order to clarify this point, the final regulations provide generally that a rate of interest or principal sum is definitely ascertainable if (i) it is invariable or (ii) it is variable but determined according to an external standard that is not subject to the borrower's control and that is not related to the success or failure of the borrower's business or activities (see § 1.385-5(d)(4)).

A new example illustrating this rule concludes that an interest rate of "prime plus three points" would be considered a definitely ascertainable rate (see § 1.385-5(e) example (10)).

A provision was also added relating to the treatment of certain payments as fixed that in form are contingent but are guaranteed (see § 1.385-5(d)(7)).

Some comments expressed concern that example (8) of § 1.385-5(e) implies that all nonrecourse loans would be considered to be hybrid. No such implication is intended. An example has been added to clarify this point (see example (14) of § 1.385-5(e)).

Debt issued in redemption of stock. When debt is issued in redemption of stock, state law may subject payments on the debt to limitations similar to those to which distributions on stock are subject, *e.g.*, payments of principal and interest cannot be made if the corporation is insolvent (or would be rendered insolvent). See Herwitz,

Installment Repurchase of Stock: Surplus Limitations, 79 Harv. L. Rev. 303 (1965). The final regulations clarify their application to instruments subject to these types of limitations.

In general; the final regulations treat these instruments as debt notwithstanding certain limitations that state law may impose on the payment of principal or interest. A payment of principal or interest is considered fixed by the regulations even though the corporation cannot be required to make the payment if it is insolvent (or would be rendered insolvent by the payment) either in the bankruptcy or equity sense of insolvency (see § 1.385–5(d)(5)(iii)). An insolvency limitation in the bankruptcy sense (*i.e.,* that interest or principal payments cannot be made if liabilities exceed, or would as a result of the payments exceed, assets) is in substance a form of subordination. Since subordination is not generally considered a contingency for purposes of the regulations, it is appropriate that subordination not be a contingency in this context. An insolvency limitation in the equity sense (*i.e.,* that interest or principal payments cannot be made if the corporation is not paying its debts as they become due) is not sufficiently different from insolvency in the bankruptcy sense to justify, as an administrative matter, having a different tax result depending on whether local law defines insolvency in the equity sense or the bankruptcy sense. Therefore, payments conditional on the solvency of the issuer are not considered contingent for purposes of the regulations. (It should be noted that this new provision is also relevant in determining whether payments on certain preferred stock are fixed payments in the nature of principal or interest.)

Two examples have been added to demonstrate the treatment of an instrument issued in redemption of stock (see examples (11) and (12) of § 1.385–5(e)).

Section 1.385–6 Proportionality

Proportionate holdings of stock and debt are of even greater significance in the final regulations than in the proposed regulations. The reason proportionality plays a central role in the final regulations is that it generally makes little economic difference (aside from tax consequences) whether proportionate shareholder advances are made as debt or equity. See Stone, *Debt-Equity Distinctions in the Tax Treatment of the Corporation and its Shareholders,* 42 Tul. L. Rev. 251 (1968).

For example, if a sole shareholder invests $50,000 in its corporation, it makes little difference, except for tax purposes, whether the shareholder receives stock, subordinated debt or a combination of the two. The shareholder will be entitled to the corporation's entire net profits and, except for the tax consequences, will generally be indifferent as to whether the profits are withdrawn from corporate solution as interest and principal payments on a debt or as dividends and payments in redemption of stock. Similarly, if the shareholder elects to receive debt, the allocation of the repayments between principal and interest makes little non-tax difference.

From a tax viewpoint, however, a sole shareholder's decision to receive debt instead of stock is very significant. Because interest is deductible to the corporation and repayments of principal are tax free to the shareholder, the shareholder may be more likely to make the investment in the form of debt. Moreover, once the shareholder has elected to receive debt, the allocation of the repayments between principal and interest can have important tax consequences. To the extent that the repayment is treated as principal, the corporation is not entitled to a deduction but the payment is tax free to the shareholder. However, to the extent the repayment is treated as interest, the shareholder is taxed currently at ordinary income rates but the corporation receives a deduction. In some circumstances the corporation and shareholder may be able to gain a tax advantage by treating more of the repayments as interest and in other circumstances they may gain a tax advantage by treating more of the repayments as principal.

Because the characterization of proportionate advances as debt instead of stock is so heavily influenced by tax considerations, one possibility would have been for the section 385 regulations to classify all proportionately-held debt as stock. Although this has occasionally been suggested by the case law as a possible standard (see Stone, *supra,* at 260, n.41), the final regulations have rejected this approach. Treasury believed it would have been unsound policy in effect to deny corporations access to shareholder capital in the form of indebtedness when loans on the same terms could have been obtained from independent lenders. Thus, the final regulations follow the mainstream of the case law and permit proportionately-held shareholder debt to be treated as debt for tax purposes. However, there is no valid reason to permit shareholders to make proportionate loans to their corporation on terms that would be unacceptable to independent lenders, particularly in light of the predominance of tax considerations in setting and enforcing the terms of proportionate shareholder debt. The final regulations therefore respect proportionate shareholder debt only if the treatment of the debt is in accordance with objective economic criteria.

Generally, the final regulations treat instruments issued proportionately to shareholders as debt if the initial terms of the instrument are arm's length terms. This arm's length standard is necessary because shareholders have no economic incentive to set arm's length terms on proportionately-held debt. Rights foregone by proportionate shareholders in their status as creditors simply enhance the value of their underlying stock interests. For example, to gain a tax advantage, a sole shareholder might be willing to lend money to its corporation at a rate of interest significantly below the market rate. The fact that the interest rate is less than the market rate has little independent economic significance because the difference between the interest the shareholder actually receives and the amount that would have been received if the market rate had been charged will remain in corporate solution, and thereby increase the value of the shareholder's stock *pro tanto.*

When the initial terms of proportionately-held shareholder debt are not arm's length terms, the regulations, where possible, in effect create arm's length terms by adjusting the interest rate. However, when the terms are not arm's length and arm's length terms cannot be created by adjusting the interest rate (*e.g.* debt issued for property), then the final regulations classify the proportionately-held shareholder debt as stock.

The final regulations also require shareholders to enforce the terms of proportionate debt according to an arm's length standard. This requirement is necessary because, even though the terms of the instrument are arm's length terms, the shareholders may have no incentive to enforce these terms. For example, assume that a sole shareholder lends $100,000 to its corporation in exchange for a 10-percent subordinated debenture. To avoid having to pay tax on the interest, the shareholder may decide not to collect the $10,000 of annual interest due on the debenture. This decision will have no independent economic significance because the value of the shareholder's stock will be increased by the full $10,000 of foregone interest. Thus, because shareholders may have no economic incentive to

enforce the terms of proportionately-held debt, such debt is subject to the rules now contained in § 1.385–6 (j), (k), and (l) that examine shareholders' actions with respect to proportionate debt after it is issued.

Even when a shareholder's holdings of stock and debt are not proportionate, however, there may be situations where the shareholder will have no economic incentive to act as an independent creditor. For example, a 50-percent shareholder who owns all of a corporation's outstanding debt might agree to forego $5,000 of interest as part of an arrangement where the other 50-percent shareholder agrees to forego a $5,000 salary payment due from the corporation. In cases like these, the courts have treated the shareholder debt as proportionate. See *Broadway Drive-In Theatre, Inc.* v. *United States*, 220 F. Supp 707 (E.D. Mo. 1963); *Reed* v. *Commissioner*, 242 F. 2d. 334 (2d. Cir. 1957). To assure arm's length behavior by shareholders holding debt non-proportionately, the final regulations treat non-proportionate debt as being held proportionately in these situations (see § 1.385–6(a)(7)).

Definition of proportionality. Because of its increased importance, the definition of proportionality has been clarified to the extent possible. Some additional examples have been provided (see examples (5), (7), (9), (10), (11), (12), (13), (14), and (15) of § 1.385–6(a)(6)). Changes have been made in the rule relating to options (see § 1.385–6(a)(2)(ii) and examples (8) and (9) of § 1.385–6(a)(6)). The rules have been clarified as to when two or more classes of instruments will be treated as a single class (for purposes of ascertaining proportionality) and when two portions of a single class of instruments will be treated as two separate classes of instruments (see § 1.385–6(a) (4) and (5)). The definition of an independent creditor has been made more flexible and, to promote certainty, also contains an objective safe harbor (see § 1.385–6(b)).

A number of comments suggested that numerical guidelines be established to provide guidance in determining when holdings of stock and debt will be considered to be substantially proportionate. The Treasury agrees with these comments. It is anticipated that these guidelines will be published as a revenue procedure.

Nominal capital rules. As proposed, § 1.385–8 (relating to nominal capital) classified any instrument (including an instrument held by an outside creditor) as equity if, at the time the instrument was issued, the corporation's debt-to-equity ratio exceeded 10:1. This rule was based on the assumption that outside creditors would not lend to corporations whose debt-to-equity ratios exceeded 10:1. Many comments have demonstrated that this assumption was wrong. Therefore, under the final regulations, the nominal capital rules (as revised) can operate to classify instruments as equity only if holdings of the instruments and the corporation's stock are substantially proportionate.

In the final regulations, § 1.385–6(f) (relating to excessive debt) replaces § 1.385–8 (relating to nominal capital). Some comments criticized the proposed regulations for adopting an absolute 10:1 debt-equity standard without regard to variations in debt-equity ratios by industry. The Treasury agrees with these comments. The excessive debt provisions of the final regulations take industry practice into account by providing that a corporation's debt will not be considered excessive if all of the instrument's terms and conditions together with the corporation's financial structure would be satisfactory to a bank, insurance company or similar lending institution making ordinary commercial loans. In addition, the excessive debt provisions provide a safe harbor for straight debt instruments issued by corporations that meet two tests. First, the corporation's debt-equity ratio (determined in the ordinary way) must not exceed 10:1. Second, the corporation's inside debt-equity ratio must not exceed 3:1. The inside ratio is determined without taking into account liabilities to independent creditors. There were two reasons for adding to the safe harbor the requirement that the inside ratio not exceed 3:1.

First, the proposed regulations were premised on the assumption that shareholders lending proportionately to their corporations would not create unusually high debt-equity ratios to produce large interest deductions at the corporate level because the interest or discount produced by § 1.385–3 and section 1232 would be taxed currently to the shareholders as ordinary income. In other words, it was believed that the prospect of current ordinary income to the shareholder would be a deterrent to the issuance of large amounts of debt bearing high, noncommercial interest rates. Several comments pointed out, however, that this deterrent was not present in situations where the shareholders were not paying tax on the interest income (*e.g.*, certain nonresident alien shareholders, taxpayers with large net operating losses, or charitable organizations). Nothing in the proposed regulations would have prevented these shareholders from issuing themselves large amounts of proportionate debt (up to a 10:1 debt-equity ratio) at high, noncommercial interest rates. This debt would have produced large interest deductions that could have been used to offset tax at the corporate level without being taxed to the shareholders. The inside debt-equity ratio of 3:1 is intended to limit this potential abuse.

The final regulations permit proportionate shareholder loans to be classified as debt even if the inside debt-equity ratio is greater than 3:1, provided the shareholder can demonstrate that an ordinary commercial lender would have made a loan on the same terms and conditions as the shareholder loan in question. It is not sufficient for this purpose, however, for the shareholders to demonstrate that any independent lender (*e.g.*, a lender in the business of making high risk loans) would have found the terms and conditions of the shareholder loans acceptable. Instead, the shareholders must demonstrate that an institution in the business of making ordinary commercial loans (*e.g.*, a bank or insurance company) would have found the terms acceptable (see example (1) of § 1.385–6(f)(6)).

The second reason for the inside ratio of 3:1 is to limit the situations where very large amounts of discount will be imputed under § 1.385–3 and section 1232. As a general matter, when the inside ratio exceeds 3:1 and the loans do not satisfy the standard of section 1.385–6(f)(2), the proper interest rates would tend to be so high as to be noncommercial (*e.g.*, as high as 30 to 40 percent). The Treasury decided that it would be more realistic to classify such debt as stock rather than to impute these excessive, noncommercial interest rates.

Principal shareholder rules. The proposed regulations provided certain "second look" rules that could operate to reclassify instruments initially treated as debt as equity if interest or principal was not paid when due, there was a change in terms or a reasonable interest rate was not paid on a demand instrument. Under § 1.385–7 of the proposed regulations, these rules applied to instruments held by principal shareholders of the corporation (*i.e.*, shareholders owning 5 percent or more of the corporation's stock).

Several comments contended that in most cases there will be a sufficient economic incentive for shareholder-creditors to enforce their rights under debt instruments not held in substantially the same proportion as the corporation's stock. Treasury agrees with these comments. The final regulations generally apply these

"second look" rules only to debt instruments issued to shareholders substantially in proportion to their stock holdings (see § 1.385–6 (j), (k) and (l).

The foregoing changes in the nominal capital and principal shareholder rules are directly responsive to many of the comments received from small business and others. For example, the final regulations will not interfere with the normal operations of small business investment companies (see examples (11) and (12) of § 1.385–6(a)(6)), commercial lenders or other independent creditors.

Instruments not issued for money. When instruments are issued in exchange for property, the original issue discount rules of section 1232(a)(3) and the amortizable bond premium rules under § 1.61–12(c)(2) generally do not apply. Therefore, § 1.385–6(d) of the regulations requires that a reasonable rate of interest be paid on these instruments to ensure that the holders will be paid principal and interest in the proper proportions (*i.e.*, in the same proportions as would be paid to outside creditors). In the proposed regulations, this rule applied to all instruments issued proportionately except those issued for money. In the final regulations, the application of this rule has been narrowed to those situations where the original issue discount provisions of section 1232 and the bond premium provisions of § 1.61–12(c)(2) are not applicable (see § 1.385–6(d)(1)(iii)). This has the effect of narrowing the application of § 1.385–6(d) in two respects.

First, the original issue discount rules are applicable to certain instruments issued for property (*e.g.*, instruments issued for marketable securities). In such cases, the original issue discount provisions apply and, accordingly, §1.385–6(d)(1) is not applicable.

Second, there are certain situations where it may not be clear under present law whether the original issue discount provisions of section 1232 would apply (*e.g.*, an instrument issued as a dividend or as compensation). Section 1.385–6(d)(1) applies in these situations unless section 1232 is found to be applicable. This is in accordance with the policy of the regulations not to classify proportionately-held instruments as stock because they do not bear a reasonable interest rate if the interest rate can be adjusted to an arm's length rate through the creation of original issue discount or premium.

An exception to the debt-for-property rule has been added for the issuance of a new instrument in exchange for an equal or greater principal amount of indebtedness when (i) an independent creditor holding the outstanding indebtedness would, in the exercise of ordinary diligence, have agreed to the exchange and (ii) the issuing corporation would, in the exercise of ordinary diligence, have agreed to make the exchange with an independent creditor holding the outstanding indebtedness (see § 1.385–6(d)(3) and example (4) of § 1.385–6(d)(4)). The rationale for the exception is that a shareholder holding a debt instrument should not be held to a higher standard, upon exchanging that debt instrument for a new debt instrument, than that of an independent creditor holding the original debt instrument.

Some comments criticized the classification of proportionately-held shareholder debt issued in exchange for property as stock if the debt does not bear a reasonable interest rate as being too harsh. The Treasury believes these comments misconstrue the structure of the regulations. It would have been possible for the section 385 regulations to classify all proportionate shareholder debt (including debt issued for money) as stock if the corporation and its shareholders were not dealing at arm's length with respect to the instruments in question. This approach would have resulted in reclassifying the entire purported debt as stock. Instead, however, the regulations, where possible, have adopted the more liberal policy of in effect creating arm's length terms by adjusting the interest rate through the creation of discount or premium. Only when it is not possible to adjust the interest rate by creating discount or premium (*e.g.*, debt issued for property) do the regulations classify the entire debt as equity.

Reasonable rate of interest. Section 1.385–6(d)(1) of the proposed regulations provided that a rate of interest will be considered reasonable if it is a rate within the range of rates paid to independent creditors on similar instruments by corporations in the same general industry, geographic location and financial condition as the issuer.

A number of comments expressed the view that under this standard it will be difficult for shareholders to determine a reasonable interest rate on loans to their corporations and thus avoid the creation of discount or premium under § 1.385–3 (or in some cases, the classification of their interests as stock). These comments, however, fail to recognize that the debt-equity problem is an extraordinarily difficult one. Nearly all of the factors identified in the course of forty years of case law are relevant. The regulations under section 385 achieve considerable simplification by weighing these factors according to their effect on the interest rate (or on the fair market value of the interest in question). Any attempt to reduce the problem further, to a set of purely mechanical formulas, would necessarily result in oversimplification. There is a certain irreducible core of difficulty in making the debt-equity distinction, and some exercise of judgment is ultimately required. The final regulations present this judgment as a relatively straightforward exercise in valuation, and this is quite possibly the most that can be done.

Moreover, many of these comments have exaggerated the difficulty of ascertaining a reasonable interest rate. In most cases a corporation will have some record of outside borrowing (*e.g.*, a bank loan) to serve as a benchmark for determining the reasonableness of the rate of interest charged on the shareholder loans in question. It should only be in rare and unusual circumstances that a corporation will have borrowed money from its shareholders but not from an outside lender. And even in these cases (as in cases where there are outside borrowings), the interest rate paid by borrowers with superior credit ratings (*e.g.* the U.S. Treasury) on indebtedness with a maturity similar to those of the shareholder loans should provide a floor for establishing a reasonable rate of interest on the shareholder loans.

Other comments criticized the regulations for placing too much emphasis on the interest rate factor to the exclusion of the other factors considered important by the body of case law concerned with the debt-equity distinction. The regulations do not ignore these other factors, however, but instead take them into account by measuring their effect on the interest rate (or fair market value) of the instrument in question. In other words, when an instrument does not bear a reasonable rate of interest, it will be because the corporation and the shareholder-creditor will not have objectively taken into account one or more of the case law factors (*e.g.*, maturity date, subordination, capitalization) in establishing the rate of interest.

Several comments stated that it would be difficult to apply the concept of a "local commercial bank" to a large corporation conducting an extensive national or international business. To eliminate this difficulty, the term "local commercial bank" was extended to include any bank at which the issuing corporation ordinarily does business (see § 1.385–6(e)(4)).

Also, an example was added to demonstrate that, under certain circumstances, a bank loan guaranteed by a shareholder may be used as a basis for comparison in determining a reasonable interest rate for a shareholder loan (see example (1) of § 1.385-6(e)(5)).

Safe harbor. Many comments suggested that the computation of the 1:1 debt-equity ratio contained in the interest rate safe harbor of proposed § 1.385-6 (d)(2) should be based on the fair market value of the corporation's assets rather than their adjusted basis. However, this approach was rejected for two reasons.

First, the purpose of a safe harbor is to promote certainty by providing an objective standard which is easy for both taxpayers and the Internal Revenue Service to apply; if taxpayers satisfy this objective standard, they are assured of a desired tax result. However, if a corporation were able to use the more subjective standard of the fair market value of its assets in computing its debt-equity ratio, the safe harbor would not provide an easy-to-apply objective standard, and its purpose would be defeated.

Second, it must be remembered that the failure to satisfy the safe harbor does not mean that the corporation's instruments are treated as equity—it means only that the corporation must prove that the interest rate paid on the instruments was reasonable. Moreover, the ways of proving the corporation's ability to borrow from outside creditors at commercial rates are similar to those of proving the fair market value of a corporation's assets. For example, demonstrating that the assets can produce a certain income stream is one way of proving the fair market value of the assets, and it is also a way of showing the capacity reliably to repay a loan—and therefore the capacity to borrow at commercial rates. Similarly, demonstrating that the assets are readily salable is another way of proving their value, and it is also a way of showing security for a loan—and therefore the capacity to borrow at commercial rates.

Thus, if a corporation can prove that its assets have a substantial net fair market value, the corporation should also be able to prove its capacity to borrow at commercial rates. It was therefore decided that the safe harbor could be maintained as an objective standard for both taxpayers and the Government (*i.e.*, using adjusted basis of assets) without causing significant disadvantage to taxpayers.

Safe harbor interest rates in the proposed regulations (*i.e.*, the prime rate and the rate payable on tax refunds under section 6621) have been criticized as too low. The Treasury recognizes that few small businesses are able to borrow at these rates. However, a low rate was chosen deliberately for the benefit of small business. In many instances, this will enable small businesses to obtain loans from their shareholders at the same interest rates paid by the largest corporations.

In view of the fact that the safe harbor interest rates are, in most cases, below-market rates, the 1:1 safe harbor ratio has not been increased. If this ratio were increased, most corporations would be able to rely upon the regulations to avoid the uncertainty inherent in the factor-oriented approach of the case law and, at the same time, charge below-market interest rates on proportionate debt.

However, the safe harbor interest rate for corporations having a 1:1 debt-to-equity ratio has been expanded. Under the final regulations, an interest rate determined from time to time by the Secretary taking into consideration the average yield on outstanding marketable obligations of the United States of comparable maturity is an additional safe harbor interest rate for corporations having a 1:1 debt-to-equity ratio (see § 1.385-6 (e)(2)(i) and example (2) of § 1.385-6 (e)(5)). It is anticipated that these rates will be published in a revenue procedure. This change allows corporations to use the interest rates on longer term Treasury obligations as safe harbor rates when the prime rate may not be an accurate indicator of long-term interest rates.

Computing debt-to-equity ratio. The proposed regulations were designed to provide a high degree of certainty in computing a corporation's debt-equity ratio. Because trade accounts payable vary during the ordinary course of business in a way that is largely beyond the control of the shareholders, trade accounts payable were excluded from the liability side of the ratio. Some comments pointed out that certain other liabilities might have a similar effect. Accordingly, the final regulations treat these other liabilities in the same manner as trade account payables (see § 1.385-6(g)(1)(i) and (5)(v)).

Under the proposed regulations, the debt-equity ratio is computed without regard to the treatment of any interest as stock or indebtedness by reason of section 385. A taxpayer could have defeated the purpose of this rule by "lending" to its corporation in exchange for contractual commitments which were nominally preferred stock but would be reclassified as debt under the regulations. The provision was accordingly altered (see § 1.385-6(g)(3(ii)).

Some comments criticized the proposed rules on debt-to-equity ratios of affiliated corporations. The Treasury agrees that these rules were not explained adequately, and the final regulations are more specific (see § 1.385-6(h)).

Change in terms. A new exception in the debt-for-property rules (see § 1.385-6(d)(3)) may also have application to changes in terms of instruments held proportionately. The effect of this new exception is that such a change in terms will not result in the reclassification of the instrument as stock if (i) an independent creditor holding the instrument would, in the exercise of ordinary diligence, have agreed to the change in terms, and (ii) the issuing corporation would, in the exercise of ordinary diligence, have agreed to the change in terms even if the instrument were held by an independent creditor (see examples (1) and (3) of § 1.385-6(j)(4)).

Section 1.385-6(j) applies to a change in the terms of an instrument only for purposes of the section 385 regulations and does not otherwise affect existing law relating to the tax treatment of a change in the terms of an instrument. Thus, for example, § 1.385-6(j) does not change existing law as to when a change in the terms of an instrument will constitute a taxable exchange of instruments.

"Second look" rules. The proposed regulations implied to some that shareholders must sue their corporation if it fails to pay principal or interest. The Treasury recognizes that independent creditors do not always bring suit in these circumstances. The final regulations clarify this point (see § 1.385-6 (k) (2) example (3)).

A provision has been added making it clear that a corporation's payment of interest with property other than money (*e.g.*, a note) will be considered actual payment for purposes of the "second look" rules, but only to the extent of the fair market value of the property (see § 1.385-6(k)(3)).

Section 1.385-7 Certain Other Obligations

The scope of proposed regulation § 1.385-9 (relating to certain unwritten obligations) has been expanded. The expanded version, now contained in § 1.385-7, applies to any loan made by a person other than an independent creditor that is not evidenced by an instrument within six months after the loan is made. In general, this section would apply to two types of loans: (i) unwritten loans and (ii) loans where the

material terms and conditions are contained in a document other than an instrument (*e.g.*, a board of directors' resolution or an entry on a corporation's books).

The comments suggested that the rules in proposed § 1.385–9 (relating to certain unwritten obligations) should be conformed to the rules in proposed § 1.385–7(d) (relating to instruments payable on demand). The Treasury agrees with these comments and the final regulations largely conform the substance of these two sets of rules. In particular, if a corporation does not have excessive debt, a loan subject to § 1.385–7 of the final regulations will not be reclassified as a contribution to capital if the corporation pays interest on the loan at a reasonable rate.

Some comments also stated that the rules of proposed regulation § 1.385–9 should not apply to shareholders owning *de minimis* amounts of stock because it appeared unlikely that such shareholders would maintain a casual attitude towards their unwritten loans to the corporation. Other comments pointed out that, taken literally, proposed regulation § 1.385–9 would not apply to unwritten loans between brother-sister corporations wholly-owned by a common parent, an unwarranted result. Treasury agrees with both comments. Therefore, § 1.385–7 will apply to loans made by persons other than independent creditors rather than simply to shareholder loans.

The exception for loans up to $25,000 which are repaid within six months has been clarified in its application to overlapping loans (see § 1.385–7(a)(2)).

Section 1.385–8 Locked Interests

This section is substantively unchanged from the proposed regulations.

Section 1.385–9 Guaranteed Loans

Some confusion was generated by the proposed rules on guaranteed loans. The final regulations make it plain that these rules are essentially a restatement of existing case law.

No implication is to be drawn from § 1.385–9 as to the tax treatment of international finance companies.

Section 1.385–10 Certain Preferred Stock

Conventional preferred stock (*i.e.*, with dividends payable at the board of directors' discretion and callable at the corporation's discretion) has always been treated as stock for tax purposes, and will continue to be so treated under the final regulations. In recent years, however, there has been an increased issuance of certain preferred stocks with features that have traditionally been associated with debt, such as a fixed term and mandatory payment schedules. Several comments have requested clarification on the application of the proposed regulations to these so-called "sinking fund" preferred stocks.

The rules governing the treatment of preferred stock as stock or debt for tax purposes are contained in § 1.385–10 of the final regulations. Under § 1.385–10, preferred stock is treated as stock for tax purposes if it does not provide for fixed payments in the nature of principal or interest.

For this purpose, a purported dividend or payment in redemption of stock is not fixed if it is contingent. A payment is contingent if it is payable only out of earned surplus or out of retained earnings. A payment is also contingent if making the payment is discretionary with the board of directors, even if the failure to make such payment prevents the corporation from paying dividends or making redemption payments in respect of more junior issues of stock. Thus, conventional preferred stocks whose dividends and redemption payments are payable only out of earnings or in the discretion of the board of directors are not considered to provide for fixed payments in the nature of principal or interest and are treated as stock under the regulations.

On the other hand, the fact that provision must be made for holders of other interests (*e.g.*, subordinated debt or senior issues of preferred stock) before dividend or redemption payments can be made to the preferred shareholders does not make the payments on the preferred stock contingent because subordination is not generally considered a contingency under the section 385 regulations. Therefore, payment limitations on dividends and redemptions based on insolvency in the bankruptcy sense (*i.e.*, in the sense that liabilities exceed assets) or on impairment of capital are not contingencies because they are essentially forms of subordination. Moreover, insolvency in the equity sense (*i.e.*, the corporation's inability to pay its debts as they become due) is not considered a contingency because it is not sufficiently different from insolvency in the bankruptcy sense to justify, as an administrative matter, having a different result depending on whether local law defines insolvency in the bankruptcy or equity sense.

If the preferred stock provides for fixed payments in the nature of principal or interest, the preferred stock is treated as an instrument. As such, it is subject to the hybrid instrument rules of § 1.385–5 (or § 1.385–6(c)) and may be treated as debt or stock under these rules. An example has been added to demonstrate the applicability of the hybrid instrument rules to a preferred stock treated as an instrument (see example (13) of § 1.385–5(e)).

Some comments stated that it would be difficult to apply the hybrid instrument rules to ascertain the tax treatment of a sinking fund preferred stock. Treasury, while recognizing that these rules cannot be applied with mathematical simplicity, rejected the alternative of treating all preferred stock automatically as stock regardless of the degree of substantive resemblance to debt. However, to aid taxpayers in achieving certainty, a rule of convenience for preferred stock has been provided (see § 1.385–10 (b)).

In addition, four new examples have been added to clarify the preferred stock rules.

Example (2) describes an issue of sinking fund preferred stock which has an average life of less than 10 years. Contributions to the sinking fund are mandatory, subject only to the restrictions in § 66 of the Model Business Corporation Act (2nd Ed. 1971). Example (2) makes it clear that sinking fund preferred stock of this kind is treated as an instrument.

Example (3) illustrates that if the sinking fund preferred stock described in example (2) has an average life of 10 years or more, then it will be treated as stock under the rule of convenience of § 1.385–10 (b).

In example (4), sinking fund payments are conditional on earnings. The example makes it clear that this is a real contingency so that the stock is not treated as indebtedness.

In example (6), payments on a preferred stock with a mandatory redemption feature are subject to the contingency that accrued but unpaid dividends can be paid only out of earned surplus or unrealized appreciation (but not out of capital or capital surplus). Thus it is possible that the common shareholders will be entitled to their contributed capital although the preferred stockholders do not receive all or part of their accrued dividends. Example (6) makes it clear that a contingency of this type is considered a real contingency so that dividend payments subject to this type of contingency are not treated as fixed payments in the nature of interest.

Provisions Relating to Other Sections

Some comments expressed uncertainty about the relationship between section 385 and Subchapter S. If a Subchapter S corporation issues a note and the note is treated as stock under section 385, then the note will be

regarded as preferred stock for all purposes of the Internal Revenue Code. Thus, no deduction will be allowed for "interest" paid on the note under section 163. Also, if the note becomes worthless, no deduction will be allowed under section 166 (relating to bad debts). However, the Treasury has not yet determined whether the corporation will have "more than one class of stock" within the meaning of section 1371(a)(4), thus terminating the corporation's election under Subchapter S. This point will be covered exclusively by § 1.1371-1(h).

Provisions have been added to the regulations under sections 482 and 992 to clarify the relationship between section 385 and those sections.

Reporting and Recordkeeping Requirements

The regulations adopted by this Treasury decision impose no new reporting burdens or recordkeeping requirements. The principal effect of the final regulations is to clarify the distinction between stock and indebtedness.

Drafting Information

The principal author of these regulations is Jack A. Levine of the Legislation and Regulations Division of the Office of Chief Counsel, Internal Revenue Service. However, personnel from other offices of the Internal Revenue Service and Treasury Department participated in developing the regulations, both on matters of substance and style.

Adoption of Amendments to the Regulations

Accordingly, 26 CFR Part 1 is amended as follows:

Paragraph 1. Section 1.166-9(c) is revised to read as follows:

§ 1.166-9 Losses of guarantors, endorsers, and indemnitors incurred on agreements made after December 31, 1975, in taxable years beginning after such date.

* * * * *

(c) *Obligations issued by corporations.* No treatment as a worthless debt is allowed with respect to a payment made by the taxpayer in discharge of part or all of the taxpayer's obligation as guarantor, endorser, or indemnitor of an obligation issued by a corporation if—

(1) The taxpayer is considered the primary obligor (see § 1.385-9), or

(2) The payment constitutes a contribution to capital by a shareholder.

The rules of this paragraph (c) apply to payments whenever made (see paragraph (f) of this section).

Par. 2. New §§ 1.385-1 through 1.385-10 are added to read as follows:

§ 1.385-1 Stock or indebtedness.

(a) *Effective date*—(1) *In general.* The regulations under section 385 apply to instruments (as defined in § 1.385-3(c)) and preferred stock issued after April 30, 1981, and to loans described in § 1.385-7 and guaranteed loans made after April 30, 1981.

(2) *Exceptions.* The regulations under section 385 do not apply to—

(i) Instruments issued pursuant to a plan of reorganization filed on or before December 29, 1980, in a proceeding under the Federal bankruptcy laws (Title 11, U.S.C.) or under the Regional Rail Reorganization Act of 1973, or

(ii) Instruments, loans described in § 1.385-7, guaranteed loans, or preferred stock issued or made pursuant to a written contract which is binding on December 29, 1980, and at all times thereafter.

(b) *Scope*—(1) *In general.* The regulations under section 385 contain rules under which certain interests in corporations are treated as stock or indebtedness. All other interests (such as bank deposits, insurance policies, claims for wages, and trade accounts payable) are outside the scope of the regulations. Any interest outside the scope of the regulations will be treated as stock or indebtedness under applicable principles of law without reference to the regulations.

(2) *Similar distinctions.* Certain other sections of the Internal Revenue Code make distinctions that are similar to (but not the same as) the one between stock and indebtedness. Section 385 does not necessarily govern these distinctions. Thus, for example, an interest in an organization may be treated as indebtedness under section 385, but the net profits of the organization may, by reason of the indebtedness, inure to the benefit of the holder within the meaning of section 501(c). Similarly, section 385 does not affect the treatment of a loan as an ownership interest within the meaning of section 48(k)(1)(C) (relating to the investment credit for movies). See § 1.48-8(a)(4)(iii).

(c) *Authority.* Sections 1.385-1 through 1.385-10 are prescribed under the authority of section 385. In addition, certain provisions in these sections derive additional authority under section 7805, because they interpret other sections of the Internal Revenue Code, including section 301 (relating to distributions of property), section 1012 (relating to basis), and section 1232 (relating to original issue discount).

(d) *Table of terms.* The following table indicates where some important terms referred to in the section 385 regulations are defined.

Subject	§ 1.385-
Contingent payment	5(c)(1)
Debt-to-equity ratio	6(f)
Excessive debt	6(f)(2)
Failure to pay interest	6(k)(3)
Fair market value	3(b)
Fixed payments; interest	5(c)(2)
Fixed payments; principal	5(c)(3)
Hybrid instrument	3(c)
Independent creditor	6(b)
Instrument	3(a)
Obligation	3(b)
Reasonable rate of interest	6(j)
Straight debt instrument	3(f)

§ 1.385-2 Summary.

(a) *Instruments issued proportionately*—(1) *Straight debt instruments.* Straight debt instruments (as defined in § 1.385-3(f)) issued proportionately to the issuing corporation's shareholders are ordinarily treated as indebtedness. Exceptions may apply where the issuing corporation has excessive debt (see § 1.385-6(f)), or where the instruments are not issued for money (see § 1.385-6(d)) or are payable on demand (see § 1.385-6(l)). Additionally, straight debt instruments initially treated as debt may be reclassified as stock where there is a failure to pay interest or principal when due (see § 1.385-6(k) and (l)(3)) or where there is a change in terms (see § 1.385-6(j)).

(2) *Hybrid instruments.* Hybrid instruments (*e.g.*, income bonds or convertible debentures) are treated as stock if they are issued proportionately (see § 1.385-6(c)).

(b) *Instruments not issued proportionately*—(1) *Straight debt instruments.* Straight debt instruments not issued proportionately are ordinarily treated as indebtedness.

(2) *Hybrid instruments.* Hybrid instruments not issued proportionately are treated as stock if their equity features are predominant (see § 1.385-5). Otherwise, they are generally treated in the same manner as straight debt instruments.

(c) *Ancillary rules*—(1) *In general.* In addition to the primary rules described in paragraphs (a) and (b) of this section, the regulations under section 385 also contain a variety of significant ancillary rules. These rules are subordinate in the sense that they do not apply directly to treat any interest as stock or indebtedness. However, they are essential to the working of the regulations.

(2) *Adjustment of interest rate.* If instruments issued to shareholders do not carry a reasonable rate of interest, then a contribution to the capital of the

corporation or a corporate distribution to the shareholder is imputed under § 1.385-3(a). This ordinarily results in the creation of either orginal issue discount (see section 1232) or amortizable bond premium (see § 1.61-12(c)(2)). This result ensures that the holders take a reasonable amount into income as interest received, and that the issuing corporation takes a reasonable deduction for interest paid on the instruments each year.

(3) *Reasonable rate of interest.* Section 1.385-6(e) contains rules for determining whether a rate of interest is reasonable. These rules are significant—

(i) Where instruments are issued proportionately to shareholders other than in exchange for money (see § 1.385-6(d));

(ii) Where instruments are held proportionately and there is a change in terms (see § 1.385-6(j)) or nonpayment of principal (see § 1.385-6(l)(3));

(iii) Where instruments held proportionately are payable on demand (see § 1.385-6(l));

(iv) Where loans of money made to a corporation by persons other than independent creditors are not evidenced by an instrument (see § 1.385-7); and

(v) In determining the fair market value of an instrument (see § 1.385-3(b)(2)).

(4) *Debt-to-equity ratio.* Paragraphs (g) and (h) of § 1.385-6 contain rules for determining a corporation's debt-to-equity ratio. These rules are significant in determining—

(i) Whether a rate of interest is presumptively reasonable (see § 1.385-6(e)(2)); and

(ii) Whether a corporation has excessive debt (see § 1.385-6(f)).

(5) *Fair market value.* Section 1.385-3(b) contains rules for determining the fair market value of an instrument. These rules are significant in determining—

(i) Whether a contribution to capital or corporate distribution is imputed under § 1.385-3(a); and

(ii) Whether the equity features of a hybrid instrument are predominant (see § 1.385-5).

(d) *Safe harbor.* In general, the regulations under section 385 provide a safe harbor for a straight debt instrument (as defined in § 1.385-3(f)) issued by a corporation whenever all of the following conditions are satisfied:

(1) *Principal and interest.* The instrument has a fixed maturity date and provides for annual payments of interest at (i) the rate in effect under section 6621, (ii) the prime rate in effect at any local commercial bank, (iii) a rate determined from time to time by the Secretary taking into consideration the average yield on outstanding marketable obligations of the United States of comparable maturity, or (iv) any rate in between.

(2) *Debt-to-equity ratio.* The debt-to-equity ratio of the corporation does not exceed 1:1.

(3) *Paid when due.* All principal and interest on the instrument are paid when due.

If a straight debt instrument falls within the safe harbor, then it will be treated as indebtedness when issued, no original issue discount or bond premium will be imputed with respect to it, and (assuming its terms are not changed) it will not be subsequently reclassified as stock.

(e) *Other provisions*—(1) *Certain other loans.* Section 1.385-7 contains rules that apply to certain loans of money made to a corporation by persons other than independent creditors that are not evidenced by an instrument within six months after the day they are made.

(2) *Locked interests.* Section 1.385-8 contains rules that treat locked interests (such as a bond with a nondetachable warrant) as separate and distinct.

(3) *Guaranteed loans.* Section 1.385-9 contains rules that apply to loans made to a corporation and guaranteed by a shareholder. Under these rules, the loan may be treated as made to the shareholder, and the shareholder may be treated as making a contribution to the capital of the corporation.

(4) *Preferred stock.* Section 1.385-10 contains rules that could result in certain purported preferred stock being treated as indebtedness.

(f) *Cautionary note.* This section is merely a summary of the regulations under section 385, and is subject in all respects to the more complete rules contained in §§ 1.385-3 through 1.385-10.

§ 1.385-3 Preliminary rules.

(a) *Excessive or inadequate consideration*—(1) *Excessive consideration.* If a corporation issues an instrument to a shareholder, then (whether the instrument is treated as stock or indebtedness) the excess of—

(i) The consideration paid, over

(ii) The fair market value of the instrument, is a contribution to capital.

(2) *Inadequate consideration.* (i) If a corporation issues an instrument to a shareholder and the instrument is treated as indebtedness, then the excess of—

(A) The fair market value of the instrument, over

(B) The consideration paid,

is a distribution to which section 301 applies. See § 1.301-1(d), (j) and (k).

(ii) If a corporation issues an instrument to a shareholder and the instrument is treated as stock, then the amount determined under paragraph (a)(2)(i) of this section is treated as a distribution of stock to which section 305 applies.

(3) *Illustrations.* The following examples illustrate the application of this paragraph (a) and related provisions:

Example (1). Corporation S is organized in 1985 for the purpose of constructing, owning, and operating a professional office building. Fifteen persons, all medical doctors, subscribe for the capital stock of S at $100 a share. On January 1, 1988, the doctors agree to advance $300 to S for each share of stock subscribed. These advances are represented by 19-year, 7-percent debentures in the principal amount of $300 each. Assume that the debentures are treated as indebtedness under § 1.385-4(a) (relating to instruments generally), and that the fair market value of each debenture is $246. Based on these facts, $54 of each $300 advance is treated as a contribution to capital. Therefore, the doctors' basis in each debenture is $246, and there is an original issue discount of $54 on each debenture. See section 1232.

Example (2). The facts are the same as in example (1), except that the doctors pay $200 for each debenture. Based on these facts, the doctors are treated as receiving a $46 distribution to which section 301 applies on each share of stock. Therefore, the doctors' basis in each debenture is $246 (see § 1.301-1(j)), and there is an original issue discount of $54 on each debenture.

Example (3). The facts are the same as in example (1), except that the debentures bear interest at 9 percent a year. Assume that the fair market value of each 9-percent debenture is $300. Based on these facts, the doctors are not treated as making a contribution to capital or as receiving a distribution to which section 301 applies. Therefore, the doctors' basis in each debenture is $300, and there is no original issue discount on the debentures.

Example (4). The facts are the same as in example (1), except that S issues the debentures together with the capital stock in 1985, and the doctors pay $400 for each unit consisting of one debenture and one share of stock. Based on these facts, the doctors' basis in each debenture is $246 (see § 1.1012-1(d)), their basis in each share of stock is $154, and the original issue discount on each debenture is $54 (see § 1.1232-3(b)(2)(ii)).

Example (5). Individuals A and B each own ½ the common stock of corporation M, which is the only class of stock outstanding. On January 1, 1982, M issues two 12-percent $1,000 notes, one ot A and one to B, each for $1,000 in cash. Assume that the fair market value of each note is $1,250 and that the notes are treated as indebtedness under § 1.385-4(a) (relating to instruments generally). Based on these facts, on January 1, 1982, A and B each receive a $250 distribution to which section 301 applies. Thus, each note has a basis of $1,250 and is issued at a premium of $250 (see section 171(b) and § 1.61-12(c)(2)).

Example (6). The facts are the same as in example (5), except that interest on the notes

is payable only at the discretion of M's board of directors, and the notes are treated as preferred stock under § 1.385-6(c) (relating to hybrid instruments held proportionately). Based on these facts, on January 1, 1982, A and B each receive a $250 distribution of preferred stock on common stock.

(b) *Fair market value.* The following rules apply for purposes of the regulations under section 385:

(1) *In general.* (i) The fair market value of an instrument is the price at which it would change hands between a willing buyer and a willing seller, neither being under any compulsion to buy or to sell and both having reasonable knowledge of all relevant facts.

(ii) The fair market value of an instrument may be determined by using present value and standard bond tables. See § 1.1232-3(b)(2)(ii)(*d*) for examples in which the fair market values of instruments are determined by the use of these tables.

(iii) (A) In determining the fair market value of an instrument (or the reasonableness of an interest rate), the Commissioner may disregard a noncommercial term of the instrument if the principal purpose of the inclusion of the term is to increase or decrease the fair market value of the instrument (or a reasonable rate of interest for the instrument). See also section 482.

(B) The following example illustrates the application of this subdivision (iii):

Example. N, a nonresident alien of the United States and a resident of country Q is the sole shareholder of domestic corporation W. On January 1, 1987, W issues a $100,000, 28-percent debenture to N in exchange for $100,000. Under provision P of the debenture, an action to enforce the terms of the debenture can be maintained only in the village court of village V, located in Q. Assume that the principal purpose of the inclusion of provision P is to reduce the fair market value of the debenture. Based on these facts, the Commissioner may disregard provision P in determining the fair market value of the debenture.

(2) *Rules of convenience.* (i) On the day of issue, the fair market value of a straight debt instrument is considered to be equal to the face amount if—

(A) The stated annual rate of interest on the instrument is reasonable (within the meaning of § 1.385-6(e)), and

(B) The consideration paid for the instrument is equal to the face amount.

(ii) Notwithstanding any other provision of this paragraph (b), if an instrument is registered with the Securities and Exchange Commission and sold to the public for money, then the fair market value of the instrument on the day of issue is the issue price (as defined in section 1232(b)(2)).

(3) *Examples.* The following examples illustrate the application of paragraph (b)(2) of this section:

Example (1). On March 1, 1985, corporation M issues a $1,000, 8-percent, 5-year note at par. Assume that on that date, 10 to 12 percent is the range of rates of interest paid to independent creditors on similar instruments issued by corporations of the same general size and in the same general industry, geographic location, and financial condition; that the rate of interest in effect under section 6621 is 6 percent; that the interest rate for 5-year obligations determined by the Secretary pursuant to § 1.385-6(e)(2)(i) is 7 percent; and that the prime rate at local commercial banks is 9 percent. Also assume that M's debt-to-equity ratio at the end of the taxable year is 1:2. Based on these facts, any rate between 6 and 12 percent is a reasonable rate of interest within the meaning of § 1.385-6(e). In particular, 8 percent is a reasonable rate of interest, and the fair market value of the note is therefore considered to be $1,000.

Example (2). The facts are the same as in example (1) except that M's debt-to-equity ratio at the end of the taxable year is 2:1. Based on these facts, paragraph (b)(2)(i) of this section does not apply.

Example (3). The facts are the same as in example (2) except that the note provides for annual payments of interest at a rate of 11 percent. Since 11 percent is within the range of rates of interest paid to independent creditors on similar instruments issued by corporations of the same general size and in the same general industry, geographic location, and financial condition, the fair market value of the note is considered to be $1,000.

(c) *Instrument.* The term "instrument" means any bond, note, debenture, or similar written evidence of an obligation.

(d) *Obligation.* The term "obligation" means an interest in a corporation that is treated as indebtedness under applicable nontax law.

(e) *Hybrid instrument.* The term "hybrid instrument" means an instrument that is convertible into stock or one (such as an income bond or a participating bond) that provides for any contingent payment to the holder (other than a call premium).

(f) *Straight debt instrument.* The term "straight debt instrument" means any instrument other than a hybrid instrument.

§ 1.385-4 Instruments generally.

(a) *General rule.* Except as otherwise provided in the regulations under section 385, all instruments (as defined in § 1.385-3(c)) are treated as indebtedness for all purposes of the Internal Revenue Code. For exceptions, see § 1.385-5 (relating to certain hybrid instruments) and § 1.385-6 (relating to proportionality).

(b) *Operating rules*—(1) *In general.* The regulations under section 385 determine the status of each instrument (*i.e.*, as stock or indebtedness) at the time the instrument is issued. Except as provided in paragraphs (j), (k), and (l) of § 1.385-6 (relating to proportionality), the status of an instrument can never change. Thus, for example, the status of an instrument is not affected by a mere change in ownership.

(2) *Special rule.* Under § 1.385-6 (j), (k), and (l), the status of an instrument can change from indebtedness to stock (*e.g.*, in the event of a failure to pay interest when due).

(c) *Effect of classification*—(1) *In general.* (i) If an instrument is treated as stock under section 385, then the instrument is treated as preferred stock for all purposes of the Internal Revenue Code. In particular, all payments of "interest" on the instrument are treated as distributions to which section 301 applies, and all payments of "principal" are treated as distributions in redemption of stock. Such preferred stock is considered to have the same terms (*e.g.*, voting rights) as the instrument has under applicable local law. Each class of instruments classified as preferred stock is treated as a separate class of preferred stock. See § 1.1371-1 for the effect on an election made under Subchapter S. Also see § 1.992-1(d)(2) for an exception to this rule.

(ii) If an instrument becomes stock under § 1.385-6 (j), (k), or (l), then the instrument is treated as having been exchanged (without recognition of gain or loss) for preferred stock in a recapitalization to which section 368(a)(1)(E) applies.

(2) *Illustrations.* The following examples illustrate the application of this paragraph (c):

Example (1). On January 1, 1982, corporation X issues a $100,000 note to A. The note is due on January 1, 1992, and pays interest at a rate of 10 percent a year. Assume that at first the note is treated as indebtedness under paragraph (a) of this section. However, on January 1, 1987, the note becomes stock under § 1.385-6(k) (relating to nonpayment of interest). A is treated as having exchanged the note for preferred stock on January 1, 1987, in a recapitalization to which section 368(a)(1)(E) applies. Moreover, A does not recognize gain or loss merely because the note is reclassified.

Example (2). The facts are the same as in example (1). In addition, on July 1, 1988, A receives $15,000 in interest on the note. The entire $15,000 payment is treated as a distribution to which section 301 applies.

Example (3). Individuals B and C each own 50 percent of the stock of corporation Y. On January 1, 1990, Y distributes one convertible debenture each to B and C as a dividend.

Assume that the convertible debentures are treated as stock under § 1.385–6(c) (relating to hybrid instruments). Also assume that Y has accumulated earnings and profits of $5 million at the time of the distribution. Based on these facts, the debentures are treated as section 306 stock unless their distribution is taxable under section 305(b)(5).

Example (4). Individual D is a shareholder in corporation Z. On January 1, 1990, D buys a 20-year, $10,000 subordinated income bond from Z. D transfers $10,000 to Z for the bond, and the bond is treated as stock under $1.385–5 (relating to hybrid instruments). On January 1, 1990, the fair market value of the bond is $8,000. Based on these facts, D has made a contribution of $2,000 to the capital of Z on January 1, 1990, and has paid $8,000 for the bond. See § 1.385–3(a)(1). In addition, because the bond is treated as preferred stock, section 305(c) and § 1.305–5(b) may apply to the $2,000 difference between the purchase price and the redemption price.

§ 1.385–5 Certain hybrid instruments.

(a) *In general.* A hybrid instrument is treated as stock if, on the day of issue—

(1) The fair market value of the instrument without its equity features is less than

(2) Fifty percent of the actual fair market value of the instrument (with those features).

(b) *Equity features.* The equity features of an instrument are the right to convert it into stock and the right to contingent payments (other than a call premium).

(c) *Special rule.* Paragraph (a) of this section shall be applied by substituting "Forty-five percent" for "Fifty percent" if clear and convincing evidence shows that, on the day of issue, both the issuer and holder reasonably believe that—

(1) The fair market value of the instrument without its equity features is not less than

(2) Fifty percent of the actual fair market value of the instrument (with those features).

(d) *Meaning of terms.* The following rules apply for purposes of the regulations under section 385:

(1) *Contingent payment.* The term "contingent payment" means any payment other than a fixed payment of principal or interest.

(2) *Fixed payments; interest.* An instrument provides for fixed payments of interest if both of the following conditions are satisfied:

(i) Interest at a definitely ascertainable rate is due on definitely ascertainable dates.

(ii) Except as provided in paragraph (d)(5) of this section, the holder's right to receive interest when due (or within 90 days thereafter) cannot be impaired without the holder's consent.

(3) *Fixed payments; principal.* An instrument provides for the fixed payment of principal if both of the following conditions are satisfied:

(i) A definitely ascertainable principal sum is payable on demand or due on definitely ascertainable dates.

(ii) Except as provided in paragraph (d)(5) of this section, the holder's right to receive principal when due cannot be impaired without the holder's consent.

(4) *Definitely ascertainable.* (i) A rate of interest is definitely ascertainable if it is applied to a definitely ascertainably principal sum and if it is—

(A) An invariable rate, or

(B) A variable rate determined according to an external standard that is not subject to the borrower's control and that is not related to the success or failure of the borrower's business or activities.

(ii) A principal sum is definitely ascertainable if it is—

(A) An invariable sum, or

(B) A variable sum determined according to an external standard that is not subject to the borrower's control and that is not related to the success or failure of the borrower's business or activities.

A principal sum is not variable simply because it is within the borrower's control to prepay all or a portion of the principal sum.

(5) *Exceptions.* The classification of a payment as fixed is not affected by the fact that:

(i) The instrument is issued under an indenture that satisfies the requirements of section 316 of the Trust Indenture Act of 1939 (15 U.S.C. § 77ppp);

(ii) A holder's right to receive interest or principal may be impaired by the operation of the Federal bankruptcy laws (Title 11, U.S.C.), the Railroad Modification Act (47 U.S.C. § 20b), or a similar provision of law; or

(iii) A holder's right to receive interest or principal may be impaired in the event of the insolvency of the issuing corporation (either in the sense that the corporation is not able to pay its debts as they become due or in the sense that its liabilities exceed its assets).

(6) *Illusory contingencies.* For purposes of this paragraph (d), the Commissioner may disregard a contingency where there is no reasonably foreseeable circumstance in which it could affect the likelihood of payment.

(7) *Certain guarantees.* If—

(i) A payment does not satisfy the requirements of paragraph (d) (2) or (3) of this section, but

(ii) The payment is guaranteed (directly or indirectly) by any person, then (depending on the facts and circumstances) the Commissioner may treat the payment as fixed. See example (5) of § 1.385–10(c).

(8) *Examples.* For examples that illustrate the application of this paragraph (d), see paragraph (a) of each of the examples in paragraph (e) of this section.

(9) *Other terms.* (i) For the definition of the term "fair market value", see § 1.385–3(b).

(ii) For the definition of the term "hybrid instrument", see § 1.385–3(e).

(iii) For the definition of the term "instrument", see § 1.385–3(c).

(e) *Illustrations.* The following examples illustrate the application of this section. It is assumed that § 1.385–6 does not apply to the instruments described in these examples.

Example (1). (a) On July 1, 1987, corporation J issues subordinated income debenture bonds in the principal amount of $1,000 each. The bonds pay interest at the rate of 8 percent a year. However, interest is payable only if earned. The bonds are due on December 31, 2006. Based on these facts, each bond provides for a fixed payment of $1,000 in principal on December 31, 2006, but for contingent payments of interest.

(b) Assume that the fair market value of the 8-percent subordinated income debenture bonds is $1,000 each. The bonds without their equity features would be $1,000 noninterest-bearing subordinated debenture bonds due on December 31, 2006. Assume that the fair market value of such instruments would be $261 each. Based on these facts, the subordinated income debenture bonds are treated as stock because the fair market value of each debenture bond without its equity features (*i.e.*, $261) is less than 50 percent of its actual fair market value (*i.e.*, $1,000/2 = $500).

Example (2). (a) On March 1, 1988, corporation M issues 6-percent subordinated income debentures in the principal amount of $1,000 each due on March 1, 2038. Annual payment of interest is mandatory if net income is available and optional otherwise. Accumulated interest must be paid in all events at maturity. Based on these facts, each debenture provides for fixed payments of $1,000 in principal and $3,000 in simple interest on March 1, 2038.

(b) Assume that the fair market value of the 6-percent subordinated income debentures is $1,000 each. The debentures without their equity features would provide for the payment of $4,000 (total principal and interest) on March 1, 2038, and would be subordinated to the general creditors of M. Assume that the fair market value of such instruments would be $265 each. Based on these facts, the income debentures are treated as stock because the fair market value of each income debenture without its equity features (*i.e.*, $265) is less than 50 percent of its actual fair market value (*i.e.*, $1,000/2 = $500).

Example (3). (a) On February 7, 1987, corporation P issues written obligations called "debenture preference stock" in the principal amount of $50 each. The debenture preference stock bears interest at 6 percent a

year. In addition, at the discretion of the board of directors of P, the holders of the debenture preference stock may share in the profits of P after a dividend of $6 has been paid on each share of P's common stock. The debenture preference stock matures on December 31, 2017, except that the maturity may be extended from time to time (but in no event beyond December 31, 2037) at the discretion of P's board of directors. Based on these facts, the debenture preference stock provides for fixed payments of interest at a rate of 6 percent and a fixed payment of $50 in principal on December 31, 2037.

(b) Assume that the fair market value of the debenture preference stock is $50 each. The debenture preference stock without its equity features would be 6-percent nonparticipating debentures due on December 31, 2037. Assume that the fair market value of such instruments would be $20.12 each. Based on these facts, the debenture preference stock is treated as stock because its fair market value without equity features (*i.e.*, $20.12) is less than 50 percent of its actual fair market value (*i.e.*, $50/2 = $25).

Example (4). (a) On December 1, 1939, corporation T issues variable interest notes in the principal amount of $1,000 each. The notes pay interest at a rate that may vary between 2 percent and 10 percent, depending on the earnings of T. The board of directors of T may, in its discretion, defer all payments of interest until the notes mature on December 1, 2014, and may subordinate the notes to other debts of T. Based on these facts, each note provides for fixed payments of $1,000 in principal and $500 in interest (*i.e.*, 2 percent x $1,000 x 25 years) on December 1, 2014.

(b) Assume that the fair market value of the variable interest notes is $1,000 each. The notes without their equity features would provide for the payment of $1,500 (total principal and interest) on December 1, 2014, and would be subject to subordination at the discretion of the board of directors of T. Assume that the fair market value of such instruments would be $219 each. Based on these facts, the variable interest notes are treated as stock because the fair market value of each note without its equity features *i.e.*, $219) is less than 50 percent of its actual fair market value *i.e.*, $1,000/2=$500).

Example (5). (a) on April 1, 1984, corporation U issues inflation provision notes in the principal amount of $557,700. The notes pay interest at a fixed rate of 6 percent on a fluctuating maturity value, and are due on April 1, 1994. The maturity value is determined according to the Consumer's Price Index, published monthly by the Bureau of Labor Statistics. Based on these facts, the inflation provision notes provide for fixed payments of both principal and interest. See paragraph (d) (4) (i) (A) and (ii) (B) of this section.

(b) The inflation provision notes are treated as indebtedness because they are straight debt instruments.

Example (6). (a) Corporation W owns a tract of land and is building 350 houses there. On August 15, 1985, P lends $300,000 to W pursuant to written agreement. The agreement provides that W will pay $175,000 to P "in lieu of interest," with $500 payable on the sale of each house. In addition, W is obligated to return P's $300,000 investment on demand at any time after December 31, 1990. The loan is secured by the general credit of W, and the written agreement contains appropriate protective provisions. Based on these facts, the written agreement provides for the fixed payment of $300,000 in principal and for contingent payment of $175,000.

(b) Assume that the fair market value of the obligation to P is $300,000. The obligation without its equity features would be a noninterest-bearing note for $300,000 due on December 31, 1990. Assume that the fair market value of such a note would be $170,000. Based on these facts, the obligation to P is treated as indebtedness because its fair market value without equity features (*i.e.*, $170,000) its not less than 50 percent of its actual fair market value (*i.e.*, $300,000/2=$150,000).

Example (7). (a) On May 1, 1982, corporation X issues subordinated debentures due on May 1, 1992, in the principal amount of $1,000 each. Interest is payable annually at the fixed rate of 7 percent a year. Additional interest, which is contingent on the new profits of X, is payable at a maximum rate of 1 percent a year. Default in payment of interest, while not accelerating the maturity of the debenture, gives rise to a cause of action which the debenture holder may maintain against X for nonpayment of interest. Based on these facts, each debenture provides for a fixed $1,000 payment of principal and for fixed payments of interest at the rate of 7 percent a year.

(b) Assume that the fair market value of the subordinated debentures is $1,000 each. The debentures without their equity features would be 7 percent subordinated debentures with no provision for additional interest. Assume that the fair market value of such debentures would be $949 each. Based on these facts, the subordinated debentures issued by X are treated as indebtedness because the fair market value of each debenture without its equity features (*i.e.*, $949) is not less that 50 percent of its actual fair market value *i.e.*, $1,000/2=$500).

Example (8). (a) Corporation Z owns a large tract of land and is engaged in the business of developing, subdividing, and selling the land. On January 25, 1989, Z issues noninterest-bearing debenture bonds having a face value of $500,000 and a maturity date of January 25, 2011. The retirement of the bonds will be secured by the deposit of 10 percent of Z's gross receipts into a special bank account. However, if Z is liquidated after all of its lands have been sold, it will have no further obligation to retire any of the outstanding bonds unless the 10 percent payments have not been made as required. Based on these facts, the bonds do not provide for fixed payments of either principal or interest.

(b) The debenture bonds without their equity features would pay neither principal nor interest. Such instruments would be worthless. Therefore, the debenture bonds are treated as stock.

Example (9). (a) On August 1, 1983, U, an industrial corporation, issues debentures in the principal amount of $1,000 each. The debentures pay interest at a fixed rate of 8 percent, are due on August 1, 1993, and provide for the payment of principal and interest in German marks at the exchange rate in effect on August, 1, 1983. Based on these facts, the debentures provide for fixed payments of both principal and interest. See paragraph (d)(4) (i)(B) and (ii)(B) of this section.

(b) The debentures are treated as indebtedness because they are straight debt instruments.

Example (10). (a) On September 1, 1984, corporation W issues floating rate notes in the principal amount of $100,000. The notes pay interest at 3 percentage points above the prime rate and are due on September 1, 1994. Based on these facts, the floating rate notes provide for fixed payments of both principal and interest. See paragraph (d)(4) (i)(B) and (ii)(A) of this section.

(b) The floating rate notes are treated as indebtedness because they are straight debt instruments.

Example (11). (a) A and B each own 50 percent of the only class of stock of corporation X. In addition to the outstanding stock, X has outstanding debentures held by independent creditors. On January 1, 1983, X redeems all of A's stock in exchange for a 10-year note with a principal amount of $500,000. Under the terms of the note, interest on outstanding principal is payable annually at a rate of 10 percent. Under applicable local law, the note is treated as indebtedness. However, under local law, each payment of principal and interest is subject to the restriction that no payment may be made at a time when the corporation is (or would be rendered) insolvent (*i.e.*, unable to pay its debts as they become due). The insolvency restriction does not affect the classification of the principal or interest payments as fixed payments. See paragraph (d)(5)(iii) of this section. Therefore, the note provides for fixed payments of both principal and interest.

(b) The note is treated as indebtedness because it is a straight debt instrument. The result would be the same if, under local law, payments could not be made when X's liabilities exceeded its assets.

Example (12). (a) The facts are the same as in example (11) except that, under local law, the payments of principal and interest on the note are subject to the additional restriction that each payment can only be made out of X's earned surplus. Based on these facts, the note does not provide for fixed payments of principal or interest.

(b) The note without its equity features would pay neither principal nor interest. Such an instrument would be worthless. Therefore, the note is treated as stock.

Example (13). (a) On January 1, 1990, corporation Y issues 10,000 shares of $100 par value cumulative preferred stock. The preferred stock provides for an $8 dividend, payable annually, and for mandatory redemption beginning on January 1, 1996. Twenty percent of the preferred stock (selected by lot) must be redeemed on January 1 of each of 1996, 1997, 1998, 1999, and 2000. The redemption price is $100 plus all accrued but unpaid dividends. Annual dividends are payable only out of Y's earned surplus but mandatory redemption payments

(including all accrued but unpaid dividends) are payable out of all "legally available funds." Under applicable local law, this means that the preferred stockholders have an absolute right to compel mandatory redemption payments subject to only two restrictions. First, mandatory redemption payments are not permitted if Y is (or would be rendered) insolvent (*i.e.*, not able to pay its debts as they become due). Second, mandatory redemption payments are not permitted if they would impair Y's capital (*i.e.*, if the fair market value of Y's remaining assets would be less than the sum of Y's liabilities and the liquidation value of other classes of preferred stock that are senior or equal in rank). Based on these facts, the preferred stock is treated as an instrument. See example (2) of § 1.385-10(c). Each share of preferred stock provides for fixed payments of $29.60 on January 1, 1996 ($20 redemption payment+($8 dividend×6)/5), $31.20 on January 1, 1997 ($20+($8×7)/5), $32.80 on January 1, 1998 ($20+($8×8)/5), $34.40 on January 1, 1999 (420+($8×9)/5), and $36.00 on January 1, 2000 ($20+[$8×10]/5).

(b) Assume that the fair market value of a share of preferred stock is $100. The preferred stock without its equity features would provide for the payment on January 1 of 1996, 1997, 1998, 1999, and 2000, respectively, of $29.60, $31.20, $32.80, $34.40 and $36. Assume that the fair market value of an instrument providing for such payments would be $66.35. Based on these facts, the preferred stock is treated as indebtedness because the fair market value of each share of preferred stock without its equity features (*i.e.*, $66.35) is not less than 50 percent of its actual fair market value (*i.e.*, $100/2=$50).

Example (14). (a) R is a corporation in the business of purchasing and operating office buildings and other commercial real property. On January 1, 1990, R purchases an office building from unrelated corporation S for a purchase price of $20 million. R pays $5 million in cash and issues a 15 year, 12-percent note for the remaining $15 million of the purchase price. The note is secured by a first mortgage on the office building but is otherwise nonrecourse with respect to R. The fair market value of the office building is $20 million and it is customary under the circumstances for the purchase of the building to be financed on a nonrecourse basis. Based on these facts, the note provides for fixed payments of principal and interest.

(b) The note is treated as indebtedness because it is a straight debt instrument.

(f) *Additional illustrations.* The following examples are additional illustrations of the application of this section. It is assumed that § 1.385-6 does not apply to the instruments described in these examples.

Example (1). On January 1, 1990, corporation M issues 7-percent Series A bonds in the principal amount of $1,000 each. The bonds are due on January 1, 2015, and are secured by the general credit of M. They are registered with the Securities and Exchange Commission and sold to the public at par. Because the Series A bonds are straight debt instruments, they are treated as indebtedness.

Example (2). The facts are the same as in example (1), except that the instruments issued by M are 9-percent Series B income bonds. Interest is not payable on the Series B income bonds unless earned and is noncumulative. A Series B bond without its equity features would be a $1,000 noninterest-bearing bond. Assume that the fair market value of such a noninterest-bearing bond would be $184. Based on these facts, the Series B income bonds are treated as stock because the fair market value of each bond without its equity features (*i.e.*, $184) is less than 50 percent of its actual fair market value (*i.e.*, $1,000/2=$500).

Example (3). The facts are the same as in example (2), except that the Series B income bonds are due on January 1, 2000. A Series B bond without its equity features would be a $1,000 noninterest-bearing bond due on January 1, 2000. Assume that the fair market value of such a noninterest-bearing bond would be $508. Based on these facts, the Series B income bonds are treated as indebtedness because the fair market value of each bond without its equity features (*i.e.*, $508) is not less than 50 percent of its actual fair market value (*i.e.*, $1,000/2=$500).

Example (4). The facts are the same as in example (3), except that the Series B income bonds bear 10-percent interest and are subordinated to the general creditors of M. A Series B bond without its equity features would be a $1,000 subordinated noninterest-bearing bond due on January 1, 2000. Assume that the fair market value of such a subordinated noninterest-bearing bond would be $463. Based on these facts, the Series B income bonds are treated as stock because the fair market value of each bond without its equity features (*i.e.*, $463) is less than 50 percent of its actual fair market value (*i.e.*, $1,000/2=$500).

Example (5). The facts are the same as in example (2), except that the Series B income bonds pay 8-percent cumulative interest, and accumulated interest becomes unconditionally due at maturity. A Series B bond without its equity features would be a $1,000 bond paying simple interest at 8 percent, with the interest not due until maturity on January 1, 2015. Assume that the fair market value of such an instrument would be $553. Based on these facts, the Series B income bonds are treated as indebtedness because the fair market value of each bond without its equity features (*i.e.*, $553) is not less than 50 percent of its actual fair market value (*i.e.*, $1,000/2=$500).

Example (6). The facts are the same as in example (1), except that the instruments issued by M are 6-percent Series C convertible bonds. Each Series C bond is convertible into two shares of common stock of M. A Series C bond without its equity features would be a $1,000, 6-percent bond due on January 1, 2015. Assume that the fair market value of such a bond would be $883. Based on these facts, the Series C convertible bonds are treated as indebtedness because the fair market value of each bond without its equity features (*i.e.*, $883) is not less than 50 percent of its actual fair market value (*i.e.*, $1,000/2=$500).

Example (7). The facts are the same as in example (6), except that the Series C convertible bonds pay 2-percent interest and are convertible into four shares of stock of M. A Series C bond without its equity features would be a $1,000, 2-percent bond due on January 1, 2015. Assume that the fair market value of such a bond would be $417. Based on these facts, the Series C convertible bonds are treated as stock because the fair market value of each bond without its equity features (*i.e.*, $417) is less than 50 percent of its actual fair market value (*i.e.*, $1,000/2=$500).

Example (8). The facts are the same as in example (1), except that the instruments issued by M are 7-percent Series D convertible income bonds due on January 1, 2015. The Series D bonds are convertible into two shares of common stock of M, and accumulated interest on the Series D bonds is unconditionally due at maturity. A Series D bond without its equity features would be a $1,000 bond paying simple interest at 7 percent with the interest not due until maturity on January 1, 2015. Assume that the fair market value of such a bond would be $506. Based on these facts, the Series D convertible income bonds are treated as indebtedness because the fair market value of each bond without its equity features (*i.e.*, $506) is not less than 50 percent of its actual fair market value (*i.e.*, $1,000/2=$500).

Example (9). The facts are the same as in example (4), except that the Series B income bonds are privately placed with corporation X. In reliance on an independent appraisal, both X and M reasonably believe that the fair market value of the Series B income bonds without their equity features is $510 each. Based on these facts, the Series B income bonds are treated as indebtedness. See paragraph (c) of this section.

§ 1.385-6 Proportionality.

(a) *In general*—(1) *Scope.* This section applies to a class of instruments if holdings of stock and the instruments are substantially proportionate. This section affects hybrid instruments, instruments not issued for money, instruments that are payable on demand, and certain other instruments where there is a change in terms or a failure to pay principal or interest, or where a corporation's debt-to-equity ratio is excessive.

(2) *Proportionality.* (i) Substantial proportionality is determined from all relevant facts and circumstances, including family or other relationships described in section 318(a).

(ii) Stock constructively owned under section 318(a)(4) (relating to options) is taken into account to the extent it is reasonable to expect, at the time of the determination, that the options may be exercised.

(3) *Exceptions.* (i) This section does not apply if a corporation's stock and instruments are widely held and the instruments are separately traded and readily marketable. .

(ii) This section does not apply to any instrument held by an independent creditor (as defined in § 1.385-6(b)).

(4) *Two classes treated as one.* Depending on the facts and circumstances, two or more classes of instruments may be considered together. For example:

(i) If—

(A) Two or more classes of instruments are issued pursuant to a plan, and

(B) Holdings of stock and the instruments will be substantially proportionate on completion of the plan,

then this section applies to each instrument immediately after it is issued.

(ii) If (regardless of whether issued pursuant to a plan)—

(A) Subsequent to their issuance, two or more classes of instruments are treated as a single class, and

(B) Considered as a single class, holdings of stock and such class are substantially proportionate,

then this section applies to each class beginning at the time of such treatment.

(5) *One class treated as two.* If two portions of a class of instruments are treated differently (*e.g.*, interest is paid on one portion but not on the other), then each portion is treated as a separate class beginning at the time of such treatment.

(6) *Illustrations.* The following examples illustrate the application of this paragraph (a):

Example (1). A and B each own 50 percent of the stock of corporation X. In addition, A owns 40 percent of a class of debentures issued by X, and B owns the remaining 60 percent. Based on these facts, holdings of the debentures and holdings of stock in X are substantially proportionate, and this section applies to the debentures. The result would be the same if the debentures owned by B were owned by B's spouse.

Example (2). A, B, and C each own 100 shares of common stock in corporation Y. Y has no other stock of any class outstanding. However, Y does have outstanding subordinated 8-percent debentures in the principal amount of $100,000. A owns $40,000 of the debentures, B owns $30,000, C owns $20,000 and an independent creditor owns the remaining $10,000. Based on these facts, holdings of the debentures and holdings of stock in Y are substantially proportionate, and this section applies to the debentures held by A, B and C. However, this section does not apply to the debentures held by the independent creditor.

Example (3). The facts are the same as in example (2), except that A, B, and C each own $10,000 of debentures, and the independent creditor owns $70,000. Based on these facts, the holdings of stock and debentures are not substantially proportionate. Therefore, this section does not apply to the debentures upon their issuance.

Example (4). A, B, and C each own ⅓ of the common stock of corporation Z. Pursuant to a plan, Z issues $100,000 of 10-year, 8-percent debentures to A, $100,000 of 12-year, 8½-percent debentures to B, and $100,000 of 15-year, 9-percent debentures to C. Based on these facts, upon completion of the plan, holdings of the debentures and Z's stock are substantially proportionate. Therefore, this section applies to the debentures.

Example (5). Corporation P owns all the stock of corporations S and T. In addition, S owns 85 percent of a class of debentures issued by T. Based on these facts, holdings of the T stock and debentures are substantially proportionate. Therefore, this section applies to the debentures.

Example (6). Corporation V has more than 100,000 shareholders. On January 1, 1990, V issues $10 of debentures on each share of stock as a dividend. The stock and debentures are traded separately on a national securities exchange. Based on these facts, this section does not apply to the debentures.

Example (7). A and B each own 50 percent of the common stock of corporation W. In addition, W has outstanding $100,000 of 6-percent debentures owned entirely by A. Based on these facts, this section does not apply to the debentures.

Example (8). A owns all 100 shares of stock in corporation Y. A also owns 50 percent of a class of senior debentures issued by Y, and B owns the remaining 50 percent. In addition, B owns all of a class of junior debentures issued by Y, which are convertible into a total of 100 shares of Y stock of the same class as that held by A. Further, it is reasonable to expect that B may ultimately exercise the conversion privilege. Based on these facts, holdings of stock in Y and the senior debentures are treated as substantially proportionate under paragraph (a)(2) of this section. Consequently, this section applies to the senior debentures. However, holdings of Y stock and the junior debentures are not substantially proportionate.

Example (9). A owns all 100 shares of stock of corporation U. In addition, B owns $100,000 of convertible debentures issued by U. The debentures are convertible into 1,000 shares of U's common stock. Assume that it is reasonable to expect that B may ultimately exercise the conversion privilege. Based on these facts, B is treated as owning 1,000 shares of U common stock, and holdings of the convertible debentures and stock in U are substantially proportionate. Therefore, this section applies, and the convertible debentures are treated as stock under paragraph (c) (relating to hybrid instruments).

Example (10). Corporation M is a large manufacturing company whose products are sold through independent dealers. In order to assist individuals who do not have enough capital to become dealers, M has established a dealer investment plan. Pursuant to the dealer investment plan, M and unrelated individual I organize corporation D on January 1, 1982. M transfers $900,000 to D in exchange for 10-percent notes in the principal amount of $500,000 and 400 shares of class A stock. I transfers $100,000 to D in exchange for 1,000 shares of class B stock. The class B stock is nonvoting until all the Class A shares are redeemed for $1,000 each. At least 70 percent of D's earnings and profits must be used each year to retire the notes and to redeem the class A stock. I had no control over the redemption of stock and no right to have his stock redeemed while any of the class A stock is outstanding. M's investment will thus be systematically eliminated, and I will become the sole owner of D. Because the plan is akin to a security arrangement (see example (14) of § 1.305-3(e)), holdings of the stock and notes are not substantially proportionate. Therefore, this section does not apply to the notes. However, for purposes of section 1232 (relating to original issue discount), the issue price of the notes is equal to their fair market value. See § 1.1232-3(b)(2)(ii) (relating to investment units).

Example (11). Corporation S is a small business investment company operating under the Small Business Investment Act of 1958 (15 U.S.C. 661 and following). Individual J is an electrical engineer. On January 1, 1983, S and J, who are otherwise unrelated, form corporation X to manufacture high technology electrical components. X has a total authorized capital of 2,000 shares of common stock. S transfers $810,000 to X for 9-percent subordinated debentures in the principal amount of $800,000, 100 shares of common stock, and warrants to acquire an additional 900 shares of common stock at $100 a share. J transfers $100,000 to X for 1,000 shares of common stock. Based on these facts, holdings of the stock and debentures are not substantially proportionate. Therefore, this section does not apply to the subordinated debentures. However, for purposes of section 1232 (relating to original issue discount), the issue price of the debentures is equal to their fair market value. See § 1.1232-3(b)(2)(ii) (relating to investment units).

Example (12). Corporation T is a medium-sized supplier of computer software. Individual K is the manager of T's military applications division. On January 1, 1984, K forms corporation Y to acquire the assets of T's military applications division. K transfers $100,000 to Y for all 100 shares of Y's outstanding common stock. In addition, Y obtains financing from the following sources: $2 million from a small business investment company for 8-percent junior subordinated debentures and warrants to acquire 100 shares of common stock, $3 million from an insurance company for 14-percent senior subordinated debentures, and $2,500,000 from a bank for 10-percent secured notes. K is not otherwise related to T, the small business investment company, the insurance company, or the bank. Based on these facts, there is no substantial proportionality between holdings of stock and any class or classes of instruments. Therefore, this section does not apply to any of the instruments. However, for purposes of section 1232 (relating to original issue discount), the issue price of the junior subordinated debentures is equal to their fair market value. See § 1.1232-3(b)(2)(ii) (relating to investment units).

Example (13). A is the sole shareholder of corporation X. On January 1, 1987, X issues $50,000 of Class B debentures to A and $50,000 of Class B debentures to independent

creditor K. Based on these facts, holdings of the X stock and the Class B debentures are not substantially proportionate. However, on January 1, 1989, A voluntarily under paragraph (a)(5) of this section, A's debentures are treated as a separate class beginning on January 1, 1989. Thus, they may be treated as stock under paragraph (j) of this section (relating to a change in terms). The result would be the same if, on January 1, 1989, X missed an interest payment due on A's debentures, but made the payment on K's debentures. In this event, A's debentures might be treated as stock under paragraph (k) of this section (relating to nonpayment of interest).

Example (14). (a) A and B each own 50 percent of the stock of corporation Z, a calendar year taxpayer. Pursuant to a plan, Z issues $100,000 of Class A convertible debentures to A on January 1, 1983 and issues $100,000 of Class B convertible debentures to B on January 1, 1985. Based on these facts, the two classes of debentures are considered together. Therefore, holdings of the debentures and the stock are substantially proportionate and each class of debentures is treated as stock upon issuance under section 1.385-6(c) (relating to hybrid instruments issued proportionately).

(b) The facts are the same as in (a) except that the two classes of debentures are not issued pursuant to a plan. Based on these facts, this section does not apply to either class of debentures upon their issuance.

(c) The facts are the same as in (b) except that Z fails to pay interest on the debentures accrued during 1989. Based on these facts, this section applies to the two classes of debentures as of January 1, 1989 and the debentures may be treated as stock under paragraph (k) of this section (relating to nonpayment of interest). See paragraph (a)(4)(ii) of this section.

Example (15). E owns all of the common stock of corporation X. In addition, F (who is unrelated to E) owns all of the preferred stock of X. The preferred stock is an 8-percent nonparticipating, nonconvertible, nonvoting preferred stock. Further, E owns a class of debentures issued by X. Based on these facts, holdings of the X stock and debentures are substantially proportionate, and this section applies to the debentures. However, if F owned all of the debentures, this section would not apply.

(7) *Special rule.* (i) If, pursuant to an agreement or arrangement—

(A) The terms of an instrument issued to a shareholder are not fixed at arm's length or the instrument is not enforced according to its terms, and

(B) There are related, compensating non-arm's length transactions, then the Commissioner may treat holdings of the instrument and the corporation's stock as substantially proportionate.

(ii) The following examples illustrate the application of this subparagraph (7):

Example (1). A and B each own 50 percent of the common stock of corporation X. On January 1, 1985, A lends $500,000 to X in exchange for a 10-year, 10-percent $500,000 note. B is the general manager of X. During 1987, pursuant to an arrangement between A and B, X does not pay the $50,000 of interest on A's note and X pays B $50,000 less compensation than B would be entitled to under B's employment contract with X. Based on these facts, holdings of X's stock and the note will be treated as substantially proportionate. Therefore, this section applies to the note and the note may be reclassified as stock under paragraph (k) of this section (relating to nonpayment of interest).

Example (2). C and D each own 50 percent of the stock of corporation Y. On January 1, 1987, C leases a townhouse to Y for a ten-year term. Y agrees to pay an annual rent of $10,000 and additional rent equal to 20 percent of the net annual rentals from the townhouse. Also on January 1, 1987, as part of the same arrangement, D lends $100,000 to Y in exchange for a 10-year debenture. Ten percent annual interest is payable on the debenture. In addition, the holder of the debenture is entitled to contingent annual interest equal to 20 percent of the net annual rentals from the townhouse. Based on these facts, holdings of the debenture and Y's stock shall be treated as substantially proportionate. Accordingly, the debenture will be treated as stock under paragraph (c) of this section (relating to hybrid instruments issued proportionately).

(b) *Independent creditor*—(1) *In general.* For purposes of the regulations under section 385, all relevant facts and circumstances must be taken into account in determining whether a creditor is independent.

(2) *Safe harbor.* In applying this section to a class of instruments issued by a corporation, a creditor is deemed to be independent if—

(i) Stock owned by the corporation would not be attributed to the creditor under the constructive ownership rules of section 318(a) (as modified by subparagraph (3) of this paragraph (b)), and

(ii) The creditor's holdings of stock and instruments issued by the corporation are not substantially proportionate.

(3) *Constructive ownership.* For purposes of subparagraph (2)(i) of this paragraph (b)—

(i) The constructive ownership rules of section 318(a) shall be applied by substituting "5 percent" for "50 percent" in sections 318(a)(2)(C) and 318(a)(3)(C), and

(ii) In determining whether any person owns 5 percent or more of the stock of a corporation, stock constructively owned by an unrelated person under section 318(a)(4) (relating to options) is not taken into account.

(4) *Illustrations.* The following examples illustrate the application of this paragraph (b):

Example (1). Individual C owns (actually or under the constructive ownership rules of section 318(a) as modified by paragraph (b)(3) of this section) 5 percent or more in value of the stock of corporation Y. Based on these facts, stock owned by Y is attributed to C under the constructive ownership rules of section 318(a) as modified by paragraph (b)(3) of this section. Consequently, C does not come within the safe harbor of paragraph (b)(2) of this section with respect to instruments issued by Y.

Example (2). Individual A owns all 100 outstanding shares of stock and an option to acquire an additional 1,000 shares of stock in corporation X. Individual B owns an option to acquire 10 shares of stock in X. Applying the constructive ownership rules of section 318(a) as modified by paragraph (b)(3) of this section, B is considered to own 10 out of 110 outstanding shares of stock in X. Therefore, B does not come within the safe harbor of paragraph (b)(2) of this section. The result would be the same if the option owned by B were owned by B's spouse.

Example (3). Corporation Y obtains a $100,000 loan from C, an unrelated commercial bank. As a condition for making a loan, C obtains the right to designate one of Y's directors. Based on these facts, C is an independent creditor of Y.

Example (4). Individual E owns 96 percent of the stock of corporation Z, and individual F owns the remaining 4 percent. In addition, E owns 96.2 percent of a class of debentures issued by Z, and F owns the remaining 3.8 percent. Because F's own holdings of Z stock and debentures are substantially proportionate, F does not come within the safe harbor of paragraph (b)(2) of this section.

(c) *Hybrid instruments*—(1) *In general.* If this section applies to a hybrid instrument immediately after it is issued, then the instrument is treated as stock.

(2) *Hybrid instrument.* For the definition of the term "hybrid instrument", see § 1.385-3(e).

(3) *Illustration.* The following example illustrates the application of this paragraph (c):

Example. Corporation X's only outstanding stock is 100 shares of common stock. Individual A owns 50 shares, individual B owns 30 shares, and individual C owns 20 shares. On January 1, 1990, X issues $100,000 of convertible debentures. Sixty thousand dollars of the convertible debentures are issued to A, $25,000 are issued to B, and the remaining $15,000 are issued to C. Based on these facts, the convertible debentures are treated as stock.

(d) *Instruments not issued for money*—(1) *In general.* An instrument issued by a corporation is treated as stock if—

(i) This section applies to the instrument immediately after it is issued,

(ii) The stated annual rate of interest on the instrument is not reasonable (within the meaning of paragraph (e) of this section), and

(iii) The issuance of the instrument does not give rise to original issue

discount under section 1232(a)(3) or amortizable bond premium under § 1.61–12(c)(2).

(2) *Special rule.* For purposes of this paragraph (d), the reasonableness of a rate of interest is determined on the day an instrument is issued.

(3) *Exception.* (i) This paragraph (d) does not apply to an instrument that is issued in exchange for an equal or greater principal amount of indebtedness of the issuing corporation if—

(A) An independent creditor holding the outstanding indebtedness would, in the exercise of ordinary diligence, have agreed to the exchange, and

(B) The issuing corporation would, in the exercise of ordinary diligence, have agreed to make the exchange with an independent creditor holding the outstanding indebtedness.

(ii) For purposes of subdivision (i) of this subparagraph (3), the principal amount of indebtedness includes interest accrued but unpaid up until the date of the exchange, but only to the extent that such interest is paid with principal in the exchange.

(4) *Illustrations.* The following examples illustrate the application of this paragraph (d):

Example (1). J organizes corporation W on December 10, 1985 to operate a distributorship of radios, television sets, and other types of electrical appliances. On the same day, J transfers certain franchises and other assets to W in exchange for all of W's capital stock and $100,000 of 10-year, 9-percent debenture bonds. Assume that on December 10, 1985, 9 percent is not a reasonable rate of interest (within the meaning of paragraph (e) of this section). Based on these facts, the debenture bonds are treated as stock.

Example (2). Corporation X operates a wholesale electrical supply business. In the course of a recapitalization on December 30, 1990, X issues 2,100 Class B debentures to L in exchange for X common stock. Immediately after the recapitalization, L holds 90 percent of the common stock of X. The principal amount of each Class B debenture is $100, and each debenture pays $50 a year in interest. Assume that on December 30, 1990, 50 percent is not a reasonable rate of interest (within the meaning of paragraph (e) of this section). Based on these facts, the Class B debentures issued to L are treated as stock.

Example (3). On January 1, 1987, individuals A, B, and C transfer a tract of undeveloped land and $4,500 in cash to newly formed corporation X. In exchange, each receives 100 shares of stock and a 2-year, 10-percent promissory note for $110,000. Assume that 10 percent is not a reasonable rate of interest (within the meaning of paragraph (e) of this section). Based on these facts, the promissory notes are treated as stock for all purposes of the Internal Revenue Code. In particular, the notes are not treated as "other property" within the meaning of section 351(b). Thus, no gain or loss is recognized on the transfer of the land to X (see section 351), and X's basis in the land is the same as it was in the hands of A, B, and C (see section 362(a)(1)).

Example (4). B is the sole shareholder of corporation Y. On January 1, 1980, Y issues a $30,000, 10-percent note to B in exchange for $30,000. The note is due on January 1, 2000 and is treated as indebtedness under § 1.385–4(a). Interest on the note is paid according to its terms through 1999. During 1999, Y encounters business difficulties. On December 11, 1999, Y issues a new note to B in exchange for the outstanding note. The terms of the new note are identical to those of the outstanding note except that the new note is due on January 1, 2002 and is subordinated to a new bank loan being made at the time of the exchange. Assume that an independent creditor holding the outstanding note would, in the exercise of ordinary diligence, have agreed to exchange the outstanding note for the new note. Assume also that Y would, in the exercise of ordinary diligence, have agreed to the exchange even if the outstanding note were held by an independent creditor. Based on these facts, this paragraph (d) does not apply to the new note. However, the new note is subject to paragraphs (j), (k), and (l) of this section.

(e) *Reasonable rate of interest*—(1) *In general.* The annual rate of interest on an instrument issued by a corporation is reasonable if it is within the normal range of rates paid to independent creditors on similar instruments by corporations of the same general size and in the same general industry, geographic location, and financial condition on the date the determination is made.

(2) *Rule of convenience.* For purposes of the regulations under section 385, an annual rate of interest on an instrument is considered to be reasonable if—

(i) On the date the determination is made, (A) it is equal to the rate in effect under section 6621, the prime rate in effect any local commercial bank, or a rate determined from time to time by the Secretary taking into consideration the average yield on outstanding marketable obligations of the United States of comparable maturity or (B) it is in between any two of the rates described in subdivision (A) of this subdivision (i), and

(ii) At the end of the taxable year in which the determination is made, the debt-to-equity ratio of the issuing corporation is not greater than 1:1.

(3) *Exception.* Paragraph (e)(2) of this section does not apply to an instrument that evidences a nonrecourse liability.

(4) *Local commercial bank.* The term "local commercial bank" includes any commercial bank at which the issuing corporation ordinarily does business.

(5) *Illustrations.* The following examples illustrate the application of this paragraph (e):

Example (1). Individual A is the sole shareholder of corporation X. On January 1, 1980, A lends $100,000 to X in exchange for a 10-percent note. At about the same time, a local commercial bank lends $100,000 to X in exchange for a 10-percent note with approximately the same terms. The bank loan is personally guaranteed by A. However, the guarantee is required pursuant to the bank's normal lending practice as a substitute for detailed covenants, and the bank loan was made principally on X's credit (and not A's). Based on these facts, 10 percent is a reasonable rate of interest.

Example (2). A is the sole shareholder of corporation X. On July 1, 1980, A lends $100,000 to X in exchange for an 8-year note bearing annual interest at 10 percent. On December 31, 1980, X's debt-to-equity ratio, computed in accordance with the principles of paragraphs (g) and (h) of this section, is 1:1. On July 1, 1980, the section 6621 rate is 12 percent; the prime rate is 14 percent; and the interest rate for 10-year obligations determined by the Secretary pursuant to paragraph (e)(2)(i) of this section is 10 percent. Based on these facts, the rate of interest on the note is considered to be reasonable.

(6) *Cross reference.* For circumstances where the Commissioner may disregard a noncommercial term of an instrument in determining a reasonable interest rate, see § 1.385–3(b)(1)(iii).

(f) *Excessive debt*—(1) *In general.* If, immediately after an instrument is issued by a corporation—

(i) This section applies to the instrument, and

(ii) The corporation's debt is excessive,

then the instrument is treated as stock.

(2) *Excessive debt.* The corporation's debt is "excessive" if (i) all of the instrument's terms and conditions and (ii) the corporation's financial structure, taken together, would not be satisfactory to a bank, insurance company or similar lending institution which makes ordinary commercial loans. For this purpose, the corporation's size, industry, geographic location, and financial condition must be taken into account.

(3) *Safe harbor.* A corporation's debt is not excessive if—

(i) The corporation's outside ratio is less than or equal to 10:1, and

(ii) The corporation's inside ratio is less than or equal to 3:1.

(4) *Ratios.* The corporation's outside ratio is the debt-to-equity ratio determined under paragraphs (g) and (h) of this section. Its inside ratio is

determined in the same manner by excluding liabilities to independent creditors (except in computing stockholders' equity). Both ratios are determined at the end of the taxable year in which the instrument is issued.

(5) *Exception.* This paragraph (f) does not apply to instruments issued in exchange for an equal or greater principal amount of indebtedness. For purposes of the preceding sentence, the principal amount of indebtedness includes interest accrued but unpaid up until the date of the exchange, but only to the extent that such interest is paid with principal in the exchange.

(6) *Illustrations.* The following examples illustrate the application of this paragraph (f):

Example (1). A, a nonresident alien, forms corporation X on December 31, 1982. X uses the calendar year as the taxable year. A transfers $1 million to X on December 31, 1982 for $200,000 of common stock and $800,000 of 22-percent subordinated notes. In addition, X borrows $200,000 from an unrelated commercial bank. Thus, X's inside debt-to-equity ratio (determined under paragraph (f)(4)) of this section) is greater than 3:1 (*i.e.*, $800,000: $200,000=4:1). Assume that a financial institution (such as a commercial bank) which makes ordinary commercial loans normally would lend X a maximum of between 1 and 1½ times A's equity investment under the terms and conditions of the subordinated notes. Assume further, however, that a lender engaged in the business of making high risk loans would lend X four times A's equity investment under the terms and conditions of the subordinate notes. Based on these facts, the subordinated notes are treated as stock.

Example (2). Individual B forms corporation Y on December 31, 1982. Y uses the calendar year as the taxable year. On December 31, 1982, Y acquires rental property from an unrelated third party for $100,000. It obtains the $100,000 from the following sources: $10,000 from B for common stock, $10,000 from C on a second mortgage note, and $80,000 from D on a first mortgage note. Assume that C and D are B's father and mother. Also assume that the terms and conditions of the mortgage notes and Y's financial structure would be satisfactory to financial institutions (such as commercial banks) which make ordinary commercial loans. Based on these facts, the mortgage notes are not treated as stock under this paragraph (f).

(g) *Debt-to-equity ratio.* The following rules apply for purposes of the regulations under section 385:

(1) *In general.* The debt-to-equity ratio of a corporation is the ratio that—

(i) The corporation's liabilities (excluding trade accounts payable, accrued operating expenses and taxes, and other similar items) bears to

(ii) The stockholders' equity.

(2) *Stockholders' equity.* The stockholders' equity in a corporation is the excess of—

(i) The adjusted basis of its assets (less reserves for bad debts, if applicable, and other similar asset offsets) over

(ii) Its liabilities (including liabilities excluded under paragraph (g)(1)(i) of this section).

(3) *Operating rules.* Except as provided in paragraph (g)(5) of this section, the adjusted basis of a corporation's assets and the amount of its liabilities are determined—

(i) In accordance with the tax accounting principles properly used by the corporation in determining taxable income; and

(ii) Without regard to the treatment of any interest as stock or indebtedness by reason of section 385, except that preferred stock is considered a liability if it is treated as indebtedness under the regulations under section 385.

(4) *Illustrations.* The following examples illustrate the application of this paragraph (g):

Example (1). On December 31, 1990, corporation M has assets with an adjusted basis of $150,000 and liabilities of $100,000. The stockholders' equity in M is $50,000 (*i.e.*, $150,000–$100,000). Assume that M has no trade accounts payable, accrued taxes and operating expenses, etc., and that the special rules in paragraph (g)(5) of this section do not apply. Based on these facts, the debt-to-equity ratio of corporation M on December 31, 1990 is 2:1 (*i.e.*, $100,000:$50,000).

Example (2). On December 31, 1990, corporation N has assets with an adjusted basis of $150,000. In addition, N has liabilities of $100,000, including $30,000 of trade accounts payable, accrued taxes and operating expenses, etc. The stockholders' equity in N is $50,000 (*i.e.*, $150,000–$100,000). Assume that the special rules in paragraph (g)(5) of this section do not apply. Based on these facts, N has a debt-to-equity ratio on December 31, 1990 of 7:5 (*i.e.*, $70,000:$50,000).

Example (3). On December 31, 1981, foreign corporation F organizes domestic corporation D to acquire and operate a coal mine. D uses the calendar year as the taxable year. Assume that F transfers $10 million to D on December 31, 1981, in exchange for $5 million of 28-percent, 25-year debentures and 100 shares of common stock. Also assume that the interest rate generally paid on similar debentures issued to independent creditors by corporations of the same general size and in the same general industry, geographical location, and financial condition is approximately 14 percent and that 28 percent is higher than the 3 rates described in paragraph (e)(2)(i) of this section (relating to the reasonable rate of interest rule of convenience). Based on these facts, the fair market value of the debentures is approximately $9.8 million. Therefore, the balance sheet of D on December 31, 1981 is approximately as follows:

Assets—$10 million cash. Liabilities and stockholders' equity—$5.0 million debentures; $4.8 million bond premium; $9.8 million total liabilities; $0.2 million stockholders' equity=$10.0 million.

Accordingly, D has a debt-to-equity ratio of approximately 49:1 (*i.e.*, $9.8 million:$0.2 million).

(5) *Special rules.* (i) In the case of a corporation that uses the cash method of accounting, the adjusted basis of trade accounts receivable shall be deemed to be equal to the face amount of the receivables (less an appropriate reserve for uncollectibles).

(ii) (A) In determining the debt-to-equity ratio of a corporation at the end of a taxable year, the stockholders' equity shall be increased by the amount of any net operating loss (determined without regard to sections 1211(a) and 1212) sustained by the corporation during the taxable year.

(B) The following example illustrates the application of this subdivision (ii):

Example. On January 1, 1985, individual A organizes corporation T and transfers $100,000 to it for $50,000 of stock and a $50,000 note. At the end of T's first taxable year, T has assets with an adjusted basis of $120,000 and liabilities of $80,000, including $30,000 of trade accounts payable, accrued taxes and operating expenses, etc. T also has a net operating loss (determined without regard to sections 1211(a) and 1212) for the taxable year of $10,000. Based on these facts, T's stockholders' equity at the end of the taxable year is $50,000 (*i.e.*, ($120,000–$80,000)+$10,000). Consequently, T's debt-to-equity ratio is 1:1 (*i.e.*, $50,000:$50,000).

(iii) In determining the debt-to-equity ratio of a corporation that is a bank (as defined in section 581) or is primarily engaged in a lending or finance business (as defined in section 279(c)(5)), adjustments shall be made in accordance with the principles of section 279(c)(5)(A).

(iv) In determining the debt-to-equity ratio of an insurance company (as defined in § 1.801–1(b)), insurance reserves shall be treated in the same manner as trade accounts payable.

(v) A liability is treated in the same manner as a trade account payable if it is—

(A) Incurred under a commercial financing agreement (such as an automobile "floorplan" agreement) to buy an item of inventory,

(B) Secured by the item, and

(C) Due on (or before) sale of the item.

(vi) (A) The debt-to-equity ratio shall be computed without regard to distortions created by a temporary contribution to equity or any similar contrivance.

(B) The following example illustrates the application of this subdivision (vi):

Example. Individual A organizes corporation X on December 31, 1985. X uses the calendar year as the taxable year. A contributes $100,000 in cash and property with a basis of $20,000 to X in exchange for 1,000 shares of common stock and a 10-percent note worth $20,000. On January 4, 1986, X redeems 900 shares of stock for $90,000 in cash. Based on these facts, X's debt-to-equity ratio on December 31, 1985 is determined by not treating the $90,000 paid in redemption of stock on January 4, 1986 as an asset of X. Therefore, the debt-to-equity ratio is 2:1 (*i.e.*, $20,000: $10,000).

(h) *Affiliated groups*—(1) *In general.* For purposes of the regulations under section 385, the debt-to-equity ratio of a member of an affiliated group of corporations (within the meaning of section 279(g)) is determined in accordance with paragraph (g) of this section and this subparagraph (1). If one includible corporation ("X") owns stock in another includible corporation ("Y"), then X's debt-to-equity ratio is determined as follows:

(i) X is treated as having a ratable share of Y's assets and liabilities. This ratable share is determined by dividing—

(A) The fair market value of the Y stock owned by X, by

(B) The fair market value of all of Y's stock.

(ii) X's investments in Y and Y's liabilities to X are eliminated. In addition, any other duplication in the amount of X's money and other assets and liabilities resulting from the application of this subparagraph (1) (for example, resulting from Y's ownership of stock in X) is eliminated.

(2) *Illustrations.* The following examples illustrate the application of this paragraph (h):

Example (1). Corporations P and S-1 comprise an affiliated group, P owning all the stock of S-1. On December 31, 1985, P's only asset is stock in S-1, and P has no liabilities. In addition, S-1 has assets with an adjusted basis of $200,000 and liabilities of $150,000. Assume that S-1 has no trade accounts payable, accrued taxes and operating expenses, etc. and that the special rules in paragraph (g)(5) of this section do not apply. Based on these facts, P is treated as having assets with an adjusted basis of $200,000 and liabilities of $150,000. Therefore, P's debt-to-equity ratio is 3:1 (*i.e.*, $150,000:$50,000).

Example (2). The facts are the same as in example (1), except that S-1's liabilities include a $50,000 note payable to P, and P's assets consist of this note and the S-1 stock. Eliminating this note, S-1's liabilities are only $100,000. Based on these facts, P is treated as having liabilities of $100,000 and assets with an adjusted basis of $200,000. Therefore, P's debt-to-ratio is 1:1 (*i.e.*, $100,000:$100,000).

Example (3). (a) The facts are the same as in example (1), except that S-1's assets include 80 percent of the one class of stock of corporation S-2, which also is a member of the affiliated group. S-1's adjusted basis in the stock of S-2 is $15,000. In addition, S-2 has assets with an adjusted basis of $30,000 and no liabilities.

(b) Based on these facts, S-1 is treated as having $40,000 (*i.e.*, 80 percent of $50,000) of S-2's assets instead of the S-2 stock. Therefore, S-1 is treated as having assets with an adjusted basis of $225,000 and liabilities of $150,000. Thus, S-1's debt-to-equity ratio is 2:1 (*i.e.*, $150,000:$75,000).

(i) [Reserved]

(j) *Change in terms*—(1) *In general.* If—

(i) The holder agrees to postpone the maturity date or otherwise to make a substantial change in the terms of an instrument,

(ii) The instrument is treated as indebtedness under the regulations under section 385, and

(iii) This section applies to the instrument on the day of agreement,

then (for purposes of the regulations under section 385) the instrument is treated as newly issued in exchange for property on the day of agreement. Thus, beginning on the day of agreement the instrument may be treated as stock under paragraph (c) of this section (relating to hybrid instruments), paragraph (d) of this section (relating to certain instruments not issued for money), paragraph (f) of this section (relating to excessive debt), or paragraph (l) of this section (relating to instruments payable on demand). However, the exceptions to paragraphs (d) and (f) of this section may apply to the constructive exchange. See paragraphs (d)(3) and (f)(5) of this section.

(2) *Substantial.* For purposes of this paragraph (j), each change in the terms of an instrument is substantial if the fair market value of the instrument could be materially affected by that change. Thus, for example, subordination (however effected) or a change in interest rate is ordinarily a substantial change. On the other hand, a mere substitution of collateral need not be a substantial change. In addition, prepayment will not be considered a substantial change in terms.

(3) *Day of agreement.* For purposes of this paragraph (j), the "day of agreement" is the day the issuer and the holder enter into a binding contract to change the terms of an instrument.

(4) *Illustrations.* The following examples illustrate the application of this paragraph (j):

Example (1). A is the sole shareholder of corporation X. On January 1, 1990, X issues a $10,000, 9-percent note to A for $10,000 in cash. The note is due on January 1, 2000, and is treated as indebtedness under § 1.385-4(a). However, on December 10, 1995, A and X agree to extend the maturity of the note until January 1, 2015. Assume that under the terms of the agreement the note will continue to pay 9-percent interest, and that on December 10, 1995, 9-percent is not a reasonable rate of interest (within the meaning of paragraph (e) of this section) for a note due on January 1, 2015. Also assume that an independent creditor holding the note would not, in the exercise of ordinary diligence, have agreed to the extension of maturity and that, therefore, the exception of paragraph (d)(3) of this section is not applicable. Based on these facts, the note would be treated as stock under paragraph (d) of this section if it were newly issued in exchange for property on December 10, 1995. Therefore, the note is reclassified as stock on December 10, 1995.

Example (2). A is the sole shareholder of corporation X. X issues a $20,000, 10-percent note to A for $20,000 in cash on January 1, 2005. The note is due on January 1, 2007, and is treated as indebtedness under § 1.385-4(a). On December 10, 2005, A and X agree to extend the maturity of the note until January 1, 2037, and to increase the interest rate from 10 to 11 percent. For purposes of this paragraph (j), both changes in terms made on December 10, 2005 are substantial because both could materially affect the fair market value of the note. The result is the same even if the two changes are mutually offsetting in the sense that, taken together, they have no material effect on the fair market value of the note.

Example (3). B is the sole shareholder of corporation Y. On January 1, 1990, Y issues a $30,000, 10-percent note to B in exchange for $30,000. The note is due on January 1, 2000 and is treated as indebtedness under § 1.385-4(a). Interest on the note is paid according to its terms through 1999. During 1999, Y encounters business difficulties. On December 11, 1999, B agrees to extend the note until January 1, 2002 and also agrees to subordinate the note to a new bank loan being made at this time. Based on these facts, the note is treated (for purposes of the regulations under section 385) as newly issued in exchange for an equal principal amount of indebtedness. Assume that an independent creditor holding the note would, in the exercise of ordinary diligence, have agreed to both the extension of maturity and the subordination to the new bank loan. Assume also that Y would, in the exercise of ordinary diligence, have agreed to the extension and the subordination even if the note were held by an independent creditor. Based on these additional facts, the note continues to be treated as indebtedness notwithstanding the extension of maturity and the subordination to the new bank loan. See paragraph (d)(3) and example (4) of paragraph (d)(4) of this section. However, the note continues to be subject to this paragraph (j) and to paragraphs (k) and (l) of this section.

(k) *Nonpayment of interests*—(1) *In general.* If—

(i) A corporation fails to pay all or part of the interest due and payable on an instrument during a taxable year,

(ii) This section applies to the instrument on the last day of the taxable year, and

(iii) The owner of the instrument fails to exercise the ordinary diligence of an independent creditor,

then the instrument is treated as stock beginning on the later of the first day of the taxable year during which the failure to pay occurs or the first day on which this section applied to the instrument.

(2) *Illustrations.* The following examples illustrate the application of paragraph (k)(1) of this section:

Example (1). N is the sole shareholder of corporation Y. On January 1, 1986, Y issues $100,000 of 10-year, 10-percent debentures. Eightly thousand dollars of the debentures are issued to N and are treated as indebtedness under § 1.385-4(a). The remaining debentures are issued to independent creditors. Y pays all interest accrued on the debentures semiannually until 1991. Because of adverse business conditions, Y does not pay the interest accrued in 1991 on either the debentures held by N or the debentures held by the independent creditors. Both N and the independent creditors decide not to bring suit against Y in the hope that conditions will improve and that Y will be able to meet its obligations. Based on these facts, the debentures held by N continue to be treated as indebtedness because N has not failed to exercise the ordinary diligence of an independent creditor.

Example (2). (a) M is the sole shareholder of X, a corporation that uses the calendar year as the taxable year. On January 1, 1985, X issues $100,000 of 10-year, 9-percent debentures. Ten thousand dollars of the debentures are issued to M and are treated as indebtedness under § 1.385-4(a). The remaining debentures are issued to independent creditors. X pays all interest accrued on the debentures semiannually until 1990. Because of adverse business conditions, X does not pay the interest accrued in 1990 on the debentures held by M. However, X continues to pay interest on the debentures held by the independent creditors. Based on these facts, the debentures held by M are treated as a separate class of instruments beginning on January 1, 1990. See paragraph (a)(5) of this section. Since the debentures held by M are treated as a separate class of instruments, the holdings of M's debentures and the stock of X are substantially proportionate as of January 1, 1990.

(b) M has failed to take the steps that a reasonably diligent independent creditor would take to secure payment of interest. Based on these facts, the debentures held by M are treated as stock beginning on January 1, 1990. However, the debentures held by the independent creditors are not affected.

Example (3). L owns 80 percent of the stock of Z, a corporation that uses the calendar year as the taxable year. On January 1, 1985, Z issues $200,000 of 10-year, 10-percent unsecured notes to L. Z pays all interest accrued on the notes semiannually until 1990. Because of adverse business conditions, Z does not pay the interest accrued in 1990 on the notes. On February 1, 1991, L agrees to postpone $10,000 of the interest accrued in 1990 until the notes mature on January 1, 1995. In addition, Z agrees to pledge certain collateral as security for the debentures. Taking into account Z's prior record of paying all interest accrued until 1990, the pledge of collateral, and all other relevant facts and circumstances, it is assumed that L has exercised the ordinary diligence of an independent creditor. Based on these facts, the notes continue to be treated as indebtedness.

(3) *Failure to pay.* For purposes of this section, a corporation fails to pay interest on an instrument during a taxable year of the corporation if the interest is not actually paid within 90 days after the end of the year. For this purpose, payment of interest with property other than money will be considered actual payment, but only to the extent of the fair market value of such property. For example, payment of interest with a note will be considered actual payment, but only to the extent of the fair market value of the note.

(4) *Special rule.* (i) For purposes of this paragraph (k), interest accrued while this section does not apply to the instrument is disregarded.

(ii) The following example illustrates the application of this subparagraph (4):

Example. Individual A owns all the stock of X, a corporation that uses the calendar year as the taxable year. On January 1, 1982, X issues $10,000 of 8-percent debentures to B, an independent creditor. The debentures are treated as indebtedness under § 1.385-4(a) (relating to instruments generally). Interest on the debentures is payable semiannually on January 1 and July 1 of each year. X fails to make the $400 payment of interest due on July 1, 1986, and A then buys the debentures from B. X actually pays the $400 interest due on January 1, 1987, but A forgives the $400 payment that was due on July 1, 1986. Based on these facts, the debentures are not treated as stock under this paragraph (k). There is no requirement that interest accrued while B held the debentures must be paid. However, X may have income under § 1.61-12(a) (relating to discharge of indebtedness).

(l) *Payable on demand*—(1) *Initial classification.* If immediately after it is issued—

(i) This section applies to an instrument,

(ii) By its terms, the instrument is payable on demand, and

(iii) The stated annual rate of interest on the instrument is not reasonable (within the meaning of paragraph (e) of this section),

then the instrument is treated as stock.

(2) *Reclassification.* If for any taxable year (or portion thereof)—

(i) Either by its terms or by operation of paragraph (l)(3) of this section, an instrument is payable on demand,

(ii) This section applies to the instrument, and

(iii) The issuing corporation fails to pay interest on the instrument at a reasonable rate,

then the instrument is treated as stock beginning on the first day of that taxable year (or portion thereof). For purposes of this subparagraph (2), a rate of interest is considered reasonable if it is reasonable (within the meaning of paragraph (e) of this section) as of any day of the taxable year.

(3) *Nonpayment of principal.* If—

(i) The issuing corporation fails to make a scheduled payment of principal on an instrument within 90 days after the payment is due, and

(ii) The holder of the instrument fails to exercise the ordinary diligence of an independent creditor,

then, for purposes of this paragraph (l), the instrument is considered to be payable on demand beginning on the day after the day the principal is due.

(4) *Exceptions.* (i) This paragraph (l) does not apply to an instrument that is actually retired within 6 months after the day of issue provided that the sum of—

(A) The outstanding principal amount of all such instruments, plus

(B) The outstanding balance of all loans described in § 1.385-7(a)(2)(i),

does not exceed $25,000 on the day of issue. For this purpose, an instrument is not considered to be actually retired if it is reissued, renewed, or offset in any manner.

(ii) (A) If a failure to pay interest on an instrument at a reasonable rate results solely from a failure to pay interest when due, then paragraph (l)(2) of this section does not apply. See, however, paragraph (k) of this section (relating to nonpayment of interest when due).

(B) The following example illustrates the application of this subdivision (ii):

Example. Individual A owns 100 percent of the stock of corporation X. On January 1, 1990, X issues a 14-percent demand note to A. X uses the calendar year as its taxable year. Assume that 14 percent is a reasonable rate of interest (within the meaning of paragraph (e) of this section) on January 1, 1990, but that X fails to pay any part of the interest due on the note for the taxable year 1990. Based on these facts, paragraph (l)(2) of this section does not apply. However, if A has failed to exercise the ordinary diligence of an independent creditor, the note will be treated as stock under paragraph (k) of this section.

(5) *Illustrations.* The following examples illustrate the application of this paragraph (l) and related provisions:

Example (1). J and N operate a partnership that distributes beer. On April 1, 1989, J and N organize corporation T and transfer the assets of the partnership to the corporation. In exchange for the assets of the partnership, J and N each receive half of the common stock of T and an 8-percent demand note for $45,000. Assume that 8 percent is not a

reasonable rate of interest (within the meaning of paragraph (e) of this section) on any day during 1989. Based on these facts, the demand notes are treated as stock.

Example (2). On August 24, 1986, F organizes corporation G to own and operate an outdoor amusement business. G uses the calendar year as its taxable year. On August 25, 1986, F transfers trucking equipment, mechanical rides, and other assets to G in exchange for all the capital stock of G and a 6-percent note for $200,000. The note is due on August 25, 1990, and is classified as indebtedness under § 1.385-4(a). However, G does not pay the principal within 90 days after it is due, and F does not pursue such payment with the ordinary diligence of an independent creditor. Based on these facts, beginning on August 26, 1990, the note is considered to be payable on demand. Assume that during 1990 the lowest reasonable rate of interest on a demand note issued by G (taking into account the financial condition of G) is 12 percent a year, and that under applicable local law the note continues to pay 6 percent interest after maturity. Based on these facts, the note is treated as stock on August 26, 1990.

Example (3). The facts are the same as in example (2) except that G agrees to pay 12-percent interest on the note. In addition, assume that 12 percent is a reasonable rate of interest on August 26, 1990. Based on these facts, the note is not treated as stock under this paragraph (l).

Example (4). The facts are the same as in example (3), except that G issues a 12-percent demand note for $200,000 to F in payment for the 6-percent note due on August 25, 1990. Based on these facts, the 6-percent note is not treated as stock. In addition, the 12-percent note may be treated as indebtedness under § 1.385-4(a).

(m) *Meaning of terms*—(1) *Debt-to-equity ratio.* For the definition of the term "debt-to-equity ratio", see paragraphs (g) and (h) of this section.

(2) *Failure to pay.* For the definition of the term "failure to pay," see paragraph (k)(3) of this section.

(3) *Fair market value.* For the definition of the term "fair market value", see § 1.385-3(b).

(4) *Instrument.* For the definition of the term "instrument", see § 1.385-3(c).

§ 1.385-7 Certain other obligations.

(a) *Scope*—(1) *In general.* This section applies to any loan of money (*e.g.*, a cash advance) made to a corporation unless—

(i) The loan is made by an independent creditor (within the meaning of § 1.385-6(b)), or

(ii) The loan is evidenced by an instrument within six months after the day the loan is made.

(For treatment of the instrument as stock or indebtedness, see §§ 1.385-4 through 1.385-6).

(2) *Exception.* (i) This section does not apply to a loan repaid within six months after the day it is made but only to the extent that the outstanding balance of such loan, reduced by the outstanding balance of prior qualifying loans, does not exceed $25,000. For this purpose, a prior loan is "qualifying" if—

(A) It is described in paragraph (a)(1) of this section, and

(B) This section does not apply to the prior loan by reason of this paragraph (a)(2).

(ii) For purposes of paragraph (a)(2)(i)(A) of this section, a loan is not considered to be actually repaid if it is renewed or offset in any manner.

(b) *Initial classification*—(1) *In general.* Except as provided in paragraph (b)(2) of this section, a loan to which this section applies is treated as indebtedness.

(2) *Exception.* A loan to which this section applies is treated as a contribution to capital if the debtor corporation has excessive debt when the loan is made (under the principles of § 1.385-6 (f)).

(c) *Reclassification*—(1) *In general.* If a loan is treated as indebtedness under paragraph (b)(1) of this section and if the debtor corporation fails to pay interest on the loan at a reasonable rate during any taxable year, then the loan is reclassified as a contribution to capital as of the later of the first day of the taxable year or the date of the loan. For purposes of this subparagraph (1), a rate is considered reasonable if it is reasonable (under the principles of § 1.385-6(e)) as of any day of the taxable year.

(2) *Special rule.* For purposes of paragraph (c)(1) of this section, a corporation is not considered to pay interest on a loan during a taxable year unless the interest is actually paid within 90 days after the end of the year. For this purpose, payment of interest with property other than money will be considered actual payment, but only to the extent of the fair market value of such property. For example, payment of interest with a note will be considered actual payment, but only to the extent of the fair market value of the note.

(d) *Effect of this section*—(1) *Initial classification.* If a loan is treated as a contribution to captial under paragraph (b)(2) of this section, then all payments of principal and interest on the loan are treated as distributions to which section 301 applies.

(2) *Reclassification.* If a loan is reclassified as a contribution to capital under paragraph (c) of this section, then all payments of principal and interest made on the loan after the beginning of the year of reclassification are treated as distributions to which section 301 applies. In addition, once a loan is reclassified under paragraph (c) of this section, its status as a contribution to capital can never change.

(e) *Illustrations.* The following examples illustrate the application of this section:

Example (1). Corporation M uses the calendar year as the taxable year. A is the sole shareholder of M. On March 1, 1988, A advances $73,000 to M, and M establishes an account payable to A in the amount of $73,000. The account payable is entered on the books of M but is not evidenced by an instrument. The account payable is not repaid within six months. In addition, M has excessive debt within the meaning of § 1.385-6(f). Based on these facts, the account payable is classified as a contribution to capital.

Example (2). The facts are the same as in example (1), except that M does not have excessive debt. The account payable is classified as indebtedness. However, if M fails to pay (before April 1, 1987) interest at a reasonable rate on the account payable for the last 10 months of 1986, the account payable will be reclassifed as a contribution to capital (effective retroactively to March 1, 1986).

Example (3). Corporation X, which has excessive debt, uses the calendar year as the taxable year. On January 1, 1985, X's sole shareholder advances $60,000 to X. The advance is entered on the books of X but is not evidenced by an instrument. X repays $40,000 of the advance on April 1, 1985 and the remaining $20,000 on October 1, 1985. Based on these facts, this section does not apply to $25,000 of the advance that was repaid on April 1, 1985. The remaining $35,000 is treated as a contribution to capital. Therefore, $15,000 of the amount repaid on April 1 and the entire $20,000 repaid on October 1, are treated as distributions to which section 301 applies.

Example (4). (a) Corporation Y, which has excessive debt, uses the calendar year as the taxable year. A is the sole shareholder of Y. On January 1, 1990, A advances $100,000 to Y. Y repays the advance on August 1, 1990. Based on these facts, the $100,000 advance is treated as a contribution to capital.

(b) On June 1, 1990, A advances an additional $20,000 to Y. The $20,000 advance is also repaid on August 1, 1990. Based on these facts, this section does not apply to the advance of $20,000.

(c) On July 1, 1990, A advances another $10,000 to Y. The $10,000 advance is repaid on July 15, 1990. The $20,000 advance described in (b) is a prior qualifying loan with respect to the $10,000 advance (although this cannot be determined until August 1, 1990). Therefore, this section does not apply to $5,000 (*i.e.*, $25,000-$20,000) of the advance made on July 1, 1990. However, the remaining $5,000 of this advance is treated as a contribution to capital.

Example (5). Corporations S and T are wholly-owned subsidiaries of corporation P. On January 1, 1990, S makes a non-interest bearing advance of $50,000 to T. The advance is entered on the books of T but it is not evidenced by an instrument and it is not repaid within 6 months. Based on these facts, S is treated as distributing $50,000 to P, and P

is then treated as contributing this amount to the capital of T.

§ 1.385-8 Locked interests.

(a) *In general.* For purposes of the regulations under section 385, two or more distinct interests in a corporation are treated as separate even though title to one cannot be transferred without transferring title to the others. Thus, for example, if a corporation issues a bond with a nondetachable warrant, the bond and the warrant are treated as two separate interests in the corporation.

(b) *Illustrations.* The following examples illustrate the application of this section:

Example (1). On January 1, 1989, corporation X issues 20-year, $1,000 debentures with nondetachable warrants. Each warrant entitles the holder to buy 100 shares of common stock in X for $10 a share. Based on these facts, the debentures and the warrants are treated as separate interests.

Example (2). The facts are the same as in example (1), except that each debenture can be surrendered on the exercise of a warrant in lieu of cash. The result is the same as in example (1).

Example (3). On January 1, 1990, corporation Y issues a 25-year, $1,000 debenture to individual A for $1,000 in cash. Y has no other debentures outstanding. The debenture pays interest at a rate of $100 a year; $50 is payable in all events and the other $50 is noncumulative and payable only if earned. Individual A owns 80 percent of the stock in Y, and the fair market value of the debenture is $1,000. Based on these facts, the debenture is treated as stock under § 1.385-6(c) (relating to hybrid instruments held proportionately).

Example (4). The facts are the same as in example (3), except that Y issues a $600 debenture together with four shares of preferred stock to A. The debenture pays fixed interest of $50 a year and has a fair market value of $600. Each share of preferred stock has a liquidation value of $100 and pays a noncumulative dividend of $12.50 a year if earned. In addition, Y is required to redeem the preferred stock at $100 a share at the end of 25 years. Assume that § 1.385-6(f) (relating to excessive debt) does not apply to the debenture. Based on these facts, the debenture is treated as indebtedness under § 1.385-4(a). The result is the same even if A cannot transfer title to the debenture without also transferring title to the preferred stock.

§ 1.385-9 Guaranteed loans.

(a) *In general.* If—

(1) A shareholder in a corporation guarantees a loan made to the corporation (either directly or indirectly, *e.g.*, by pledging collateral), and

(2) Under relevant legal principles (applied without reference to the regulations under section 385), the loan is treated as made to the shareholder, then the shareholder is treated as making a contribution to the capital of the corporation.

(b) *Illustrations.* The following examples illustrate the application of this section:

Example (1). On September 25, 1982, J organizes corporation N and acquires all of its capital stock. In addition, J guarantees a note for $600,000 issued by N on September 28, 1982. Assume that under the principles of *Plantation Patterns, Inc. v. Commissioner*, 462 F. 2d 712 (5th Cir. 1972), cert. denied, 409 U.S. 1076 (1972), aff'g T.C. Memo. Dec. 1970-82 (1970), and other relevant case law, the note is properly treated as an obligation of J. Based on these facts, J is treated as making a $600,000 contribution to the capital of N.

Example (2). The facts are the same as in example (1). In addition, N pays $33,000 in interest and $100,000 in principal on the note on September 28, 1983. The total $133,000 in payments is treated as a distribution from N to J to which section 301 applies. Thus, N is not allowed a deduction for interest paid under section 163. However, J is allowed a deduction of $33,000 for interest paid.

Example (3). The facts are the same as in example (1). In addition, N defaults and J is required to pay $500,000 in principal on the note. Because J is treated as the primary obligor on the note (and not merely as a guarantor), the $500,000 payment will in no circumstances be treated as a loss from a loan or as a contribution to the capital of N.

Example (4). The facts are the same as in example (1), except that J does not guarantee the note issued by N until September 28, 1983. Assume that this note is properly treated as an obligation of J beginning on September 28, 1983. Also assume that on that date a principal balance of $400,000 is due on the note. Based on these facts, J is treated as making a $400,000 contribution to the capital of N on September 28, 1983.

§ 1.385-10 Certain preferred stock.

(a) *In general.* Preferred stock is treated as stock if it does not provide for fixed payments (as defined in § 1.385-5 (d)) in the nature of either principal or interest. On the other hand, preferred stock is treated as an instrument if it provides for fixed payments in the nature of principal or interest. Accordingly, preferred stock treated as an instrument is classified as indebtedness under § 1.385-4(a) (relating to instruments generally) unless it is classified as stock under § 1.385-5 (relating to hybrid instruments) or § 1.365-6 (relating to proportionality). See example (13) of § 1.385-5(e).

(b) *Rule of convenience.* Notwithstanding paragraph (a) of this section, preferred stock is treated as stock (and not as an instrument) if it satisfies each of the following conditions:

(1) The preferred stock is denominated preferred stock and is treated as preferred stock under applicable nontax law.

(2) The excess (if any) of the preferred stock's redemption price over its issue price is a reasonable redemption premium under § 1.305-5.

(3) Current dividends on the preferred stock are contingent (*e.g.*, payable only out of earned surplus or only at the board of directors' discretion).

(4) The right to receive dividend payments and payments in redemption of the preferred stock may not be enforced under applicable nontax law if either (i) the issuing corporation is insolvent or would be rendered insolvent by such payments or (ii) the making of such payments would impair the issuing corporation's capital (*i.e.*, the fair market value of the remaining assets of the issuing corporation would be less than the sum of its liabilities and the liquidation value of its other classes of preferred stock that are senior or equal in rank).

(5) Default in the making of a dividend payment or a payment in redemption of the preferred stock does not entitle the holder to accelerate redemption payments.

(6) The preferred stock has a term (during which the holder cannot compel redemption) of at least 10 years. In the case of an issue of preferred stock which provides for redemption over a period of years, the term shall be the weighted average life of the issue.

(c) *Illustrations.* The following examples illustrate the application of this section:

Example (1). On August 8, 1985, corporation D issues 500 shares of $100 par value, 6-percent preferred stock. Dividends on the preferred stock are cumulative, and D may not pay dividends on its common stock or repurchase shares of common stock so long as dividends on the preferred stock are in arrears. However, dividends on the preferred stock are payable only if declared by D's board of directors. In addition, the preferred stock is callable after August 8, 1990 for $100 a share at the discretion of D's board of directors. Thus, the holders of the preferred stock cannot compel D to redeem or purchase the stock. Based on these facts the preferred stock does not provide for fixed payments in the nature of principal or interest. Therefore, the preferred stock is treated as stock.

Example (2). On February 2, 1984, corporation E issues 500 shares of cumulative Class A sinking fund preferred stock. The Class A preferred stock provides for quarterly dividends, payable out of E's earnings, and for sinking fund payments, which must be used by E to redeem the preferred stock on specified dates. The weighted average life of the preferred stock issue is less than 10 years. Under E's articles of incorporation, sinking fund payments must be made out of all "legally available funds." Under applicable local law, this means that the preferred stockholders have an absolute right to compel the sinking fund payments subject to only two restrictions. First, sinking fund payments are not permitted if E is

insolvent (i.e., not able to pay its debts as they become due) or would be rendered insolvent by the payment. Second, sinking fund payments are not permitted if they would impair E's capital. The first restriction is not a contingency that prevents the payments from being considered fixed. See § 1.385-5(d)(5)(iii). The second restriction is, in effect, a subordination provision in that it merely prevents preferential treatment of the Class A preferred stock over equal or more senior issues of preferred stock. Based on these facts, the Class A preferred stock provides for fixed payments in the nature of principal. Therefore, the Class A preferred stock is treated as an instrument. Assuming that sinking fund payments must include all accrued and unpaid dividends, the Class A preferred stock also provides for fixed payments in the nature of interest. For this purpose, the dividends are considered to be fixed at the time they become part of a sinking fund payment. See example (13) of § 1.385-5(e).

Example (3). The facts are the same as in example (2) except that the weighted average life of the preferred stock issue is more than 10 years. Additionally, the preferred stock is treated as preferred stock under applicable nontax law; the issue price of the preferred stock is equal to its redemption price; and default in the making of a dividend payment does not entitle the holders of the preferred stock to accelerate sinking fund payments. Based on these facts, the Class A preferred stock is treated as stock under paragraph (b) of this section. The result would be the same if, under applicable local law, E would be considered insolvent (and therefore sinking fund payments would not be permitted) if its liabilities exceeded its assets (rather than if E were not able to pay its debts as they became due).

Example (4). F is a large, stable, and consistently profitable corporation. On March 21, 1985, F issues 50,000 shares of $100 par value, 9-percent sinking fund preferred stock. Dividends and sinking fund payments, which begin five years after issuance, are mandatory to the extent of retained earnings. In addition, dividends are cumulative, but they are payable only out of retained earnings. Based on these facts, the preferred stock does not provide for fixed payments in the nature of either principal or interest. Therefore, the preferred stock is treated as stock.

Example (5). The facts are the same as in example (1). In addition, corporation G, which owns all the common stock of D, unconditionally guarantees timely payment of all dividends on the preferred stock. Further, G guarantees that the preferred stock will be called for redemption by August 8, 2005. Based on these facts, the preferred stock is treated as an instrument. See § 1.385-5(d)(7).

Example (6). H, a closely-held corporation, issues 1,000 shares of $100 par value, 12-percent preferred stock on January 1, 1984. Dividends are cumulative but are payable only out of earned surplus. The preferred stock is subject to mandatory redemption after 9 years at a redemption price of $100 per share plus accrued but unpaid dividends. However, the accrued but unpaid dividends are payable, upon redemption, only out of earned surplus plus unrealized appreciation of H's assets (but not out of capital or capital surplus). Based on these facts, the preferred stock does not provide for fixed payments in the nature of interest but does provide for fixed payments in the nature of principal. Therefore, the preferred stock is treated as an instrument.

Par. 3. Section 1.482-2 is amended by adding "(applying section 385, where applicable)" after "bona fide indebtedness" in the first sentence of paragraph (a)(3) and by adding new paragraphs (a)(4), (a)(5) and (a)(6) to read as follows:

§ 1.482-2 Determination of taxable income in specific situations.

(a) *Loans or advances.* * * *

(4) *Relation to section 1232.* In determining the rate of interest actually charged on a loan or advance evidenced by a written instrument there is taken into account—

(i) Any original issue discount included in income by the lender under section 1232(a)(3), or

(ii) Any bond premium deducted by the lender under § 1.61-12(c)(2).

(5) *Relation to section 385.* If a taxpayer is subject both to section 482 and to section 385 with respect to a loan, then the sections will be applied in the following order:

(i) First, sections 385 and 1232 (and the regulations under such sections and under § 1.61-12(c)(2)) are applied to determine:

(A) Whether the loan is treated as stock or indebtedness;

(B) Whether a capital contribution or a distribution under section 301 is imputed; and

(C) Whether there is original issue discount or bond premium.

(ii) Second, section 482 is applied. The fact that a stated rate of interest on a loan falls within the safe haven of paragraph (a)(2)(iv) of this section does not preclude the application of section 385 to such loan. However, the interest rate actually charged (within the meaning of paragraph (a)(4) of this section) after application of sections 385 and 1232 will ordinarily be considered an arm's length interest rate for purposes of section 482. If a loan is classified as stock under section 385, then subparagraph (1) of this paragraph (a) is inapplicable.

(6) *Illustration.* The following example illustrates the application of subparagraphs (4) and (5) of this paragraph (a):

Example. Domestic corporation P, a calendar year taxpayer, owns all of the stock of domestic corporation S. At a time when the safe haven interest rate of paragraph (a)(2)(iv) of this section is between 5 percent and 7 percent, P lends $10,000 to S on a 6-percent, 10-year note. The fair market value of the note on the day of issue is $3,000. Based on these facts, P is treated as making a contribution of $2,000 to the capital of S (see § 1.385-3(a)(1)), and the issue price of the note within the meaning of section 1232(b)(2) is $3,000. Therefore, P must include $200 in income each year under section 1232(a)(3). As a result, $300 of interest is considered to be actually charged each year, and the rate of interest actually charged on the note is 10 percent (i.e., $300/$3,000). The rate of interest arrived at in this manner is considered to be an arm's length interest rate for purposes of this section.

§ 1.992-1 [Amended]

Par. 4. Section 1.992-1 is amended by adding the phrase "(applying section 385, where applicable)" afted the word "debt" in paragraph (d)(2)(i)(*a*) and by inserting the phrase "Notwithstanding section 385, qualifies" in lieu of the word "Qualifies" in paragraph (d)(2)(i)(*b*).

Par. 5. Section 1.1371-1 is amended by deleting the last three sentences of paragraph (g) and by inserting a new paragraph (h) to read as follows:

§ 1.1371-1 Definition of small business corporation.

* * * * *

(h) *Relation section 385.* [Reserved]

(Sections 385 and 7805 of the Internal Revenue Code of 1954 (83 Stat. 613 and 68A Stat. 917; 26 U.S.C. 385 and 7805))

William E. Williams,

Acting Commissioner of Internal Revenue.

Approved: December 23, 1980.

Emil M. Sunley,

Acting Assistant Secretary of the Treasury.

[FR Doc. 80-40020 Filed 12-29-80; 8:45 am]

BILLING CODE 4830-01-M

DEPARTMENT OF THE INTERIOR

Office of Surface Mining Reclamation and Enforcement

30 CFR Part 931

Conditional Approval of the Permanent Program Submission From the State of New Mexico Under the Surface Mining Control and Reclamation Act of 1977

AGENCY: Office of Surface Mining Reclamation and Enforcement (OSM), Interior.

ACTION: Final rule.

SUMMARY: On February 28, 1980, the State of New Mexico submitted to the Department of the Interior its proposed permanent regulatory program under the Surface Mining Control and Reclamation Act of 1977 (SMCRA). The purpose of the submission is to demonstrate the

State's intent and the capability to administer and enforce the provisions of SMCRA and the permanent regulatory program regulations, 30 CFR Chapter VII.

After providing opportunities for public comment and a thorough review of the program submission, the secretary of the Interior has determined that the New Mexico program meets the minimum requirements of SMCRA and the permanent program regulations, except for minor deficiencies discussed below under "Supplementary Information." Accordingly, the Secretary of the Interior has conditionally approved the New Mexico program.

A new Part 931 is being added to 30 CFR Chapter VII to implement this decision.

EFFECTIVE DATE: This conditional approval is effective December 31, 1980.

This conditional approval will terminate as specified in 30 CFR 931.11, unless the deficiencies identified below have been corrected in accord with 30 CFR 931.11, adopted below.

ADDRESSES: Copies of the New Mexico program and the administrative record on the New Mexico program, including the letter from the Division of Mining and Minerals agreeing to correct the deficiencies which resulted in the conditional approval, are available for public inspection and copying during business hours at:

Energy and Minerals Department, Division of Mining and Minerals, First Northern Plaza, East, Room 200, Santa Fe, New Mexico 87501, Telephone: (505)827-5451.

Office of Surface Mining, Brooks Towers, 1020 15th Street, Denver, Colorado 80202. Telephone: (303) 837-5421.

Office of Surface Mining, Room 153, Interior South Building, 1951 Constitution Ave., NW., Washington, DC 20240, Telephone: (202) 343-4728.

FOR FURTHER INFORMATION CONTACT: Mr. Carl C. Close, Assistant Director, State and Federal Programs, Office of Surface Mining Reclamation and Enforcement, U.S. Department of the Interior, South Building, 1951 Constitution Ave., NW, Washington, DC 20240, Telephone: (202) 343-4225.

SUPPLEMENTARY INFORMATION:

Introduction

This notice is organized to assist understanding of the findings underlying the Secretary's decision. It is divided into six major parts:

A. General Background on the Permanent Program.
B. General Background on the State Program Approval Process.
C. General Background on the New Mexico Program Submission.
D. Secretary's Findings.
E. Disposition of Public Comments.
F. Secretary's Decision.

Part A sets forth the statutory and regulatory framework of the environmental protection regulatory scheme under the Surface Mining Control and Reclamation Act of 1977 (SMCRA).

Part B sets forth the general statutory and regulatory scheme applicable to all states which wish to obtain primary jurisdiction to implement the permanent program within their borders.

Part C summarizes the steps undertaken by New Mexico and officials of the Department of the Interior, beginning with New Mexico's initial program submission and its program amendments and leading to the decision being announced today.

Part D contains the findings the Secretary has made with respect to each of the thirty criteria for evaluation of a state program found in SMCRA and the Secretary's regulations. Part D contains the reasons for each finding. For each finding, only the significant differences between federal laws and rules and the New Mexico program are discussed.

Relevant public comments are analyzed in Part E, and the provisions of New Mexico's program, as revised, are evaluated.

Part F identifies and explains the Secretary's decision.

A. General Background on the Permanent Program

The environmental protection provisions of SMCRA are being implemented in two phases—the initial program and the permanent program—in accordance with Sections 501-503 of SMCRA, 30 U.S.C. 1251-1253. The initial program became effective on February 3, 1978, for new coal mining operations on non-federal and non-Indian lands which received state permits on or after that date, and was effectuated on May 3, 1978, for all coal mines existing on that date. The initial program rules were promulgated by the Secretary on December 13, 1977, under 30 CFR Parts 710-725, 42 FR 62639 *et seq.*

The permanent program will become effective in each state upon the approval of a state program by the Secretary of the Interior or implementation of a federal program within the state. If a state program is approved, the state, rather than the federal government, will be the primary regulator of activities subject to SMCRA.

The federal regulations for the permanent program, including procedures for states to follow in submitting state programs and minimum standards and procedures the state program must include to be eligible for approval, are found in 30 CFR Parts 700-707 and 730-865. Part 705 was published October 20, 1977 (42 FR 56064); and Parts 795 and 865 (originally Part 830) were published December 13, 1977 (42 FR 62639). The other permanent program regulations were published March 13, 1979 (44 FR 15312-15463). Errata notices were published March 14, 1979 (44 FR 15485), August 24, 1979 (44 FR 49673-49687), September 14, 1979 (44 FR 53507-53509), November 19, 1979 (44 FR 66195), April 16, 1980 (45 FR 26001), June 5, 1980 (45 FR 37818), and July 15, 1980 (45 FR 47424). Amendments to the regulations were published October 22, 1979 (44 FR 60969), as corrected December 19, 1979 (44 FR 75143), December 19, 1979 (44 FR 75303), December 31, 1979 (44 FR 77440-77447), January 11, 1980 (45 FR 2626-2629), April 16, 1980 (45 FR 25998-26001), May 20, 1980 (45 FR 33926-33927), June 10, 1980 (45 FR 39446-39447), and August 6, 1980 (45 FR 52306-52324) and November 20, 1980 (45 FR 76932-76935). Portions of these regulations have been suspended pending further rulemaking. See 44 FR 67942 (November 27, 1979), 44 FR 77447-77454 (December 31, 1979), 45 FR 6913 (January 30, 1980) and 45 FR 51547-51550 (August 4, 1980).

B. General Background on State Program Approval Process

Any state wishing to assume primary jurisdiction for the regulation of coal mining under SMCRA may submit a program for consideration. The Secretary of the Interior has the responsibility to approve or disapprove the submission. The federal regulations governing state program submissions are found at 30 CFR Parts 730-732. After review of the submission by the Office of Surface Mining Reclamation and Enforcement (OSM) and other agencies, as well as an opportunity for the state to make additions or modifications to the program, and an opportunity for public comment, the Secretary may approve the program unconditionally; approve it conditioned upon the correction of minor deficiencies in accordance with a specified timetable; or disapprove the program in whole or in part. If the program is disapproved, the state may submit revisions to correct the items that need to be changed to meet the requirements of SMCRA and the applicable federal regulations. If the revised program is also disapproved, SMCRA requires the Secretary of the Interior to establish a federal program in that state. The state may again request approval to assume primary jurisdiction

after the Secretary implements the federal program.

Different criteria apply to various elements of a state program for the purpose of determining whether they can be approved by the Department. There are three categories of potential program elements, each with its own standard of review, as follows:

1. *"State window" proposals*—Pursuant to 30 CFR 731.13, an alternative proposed by a state to a provision of the Secretary's regulations must be both in accordance with SMCRA and consistent with the Secretary's regulations. Under 30 CFR 730.5, "in accordance with" SMCRA means that the state alternative meets the minimum requirements and includes all applicable provisions of SMCRA, while "consistent with" the Secretary's regulations means that the state proposal is not less stringent than and meets the applicable provisions of 30 CFR Chapter VII.

The state window provision may not be used to vary the requirements of SMCRA. The Secretary will approve a state window item that achieves the same or greater degree of environmental protection and procedural safeguards as the federal regulations. In addition, the state must demonstrate that the alternative provision is necessary because local requirements or local environmental conditions are such that either the use of the federal regulations would not allow the state to accomplish the intended result or the alternative will accomplish the result in a more efficient or effective manner.

2. *Regulations for Inspection and Enforcement*—As required by Section 518 of SMCRA, the civil and criminal penalty provisions of a state program must be no less stringent than the requirements of Section 518 and must be consistent with the federal regulations in 30 CFR Part 845 (see Item 1 above for meaning of "consistent with"). However, as discussed below, a recent court decision by the U.S. District Court for the District of Columbia in *In re: Permanent Surface Mining Regulations Litigation* (Civil Action No. 79–1144, May 16, 1980), has held that states cannot be required to establish a point system like that in Part 845, and the Secretary cannot require that state systems result in penalties as high as those under OSM's point system. Under Section 521 of SMCRA, the sanctions in a state program must also be no less stringent than those in Section 521 and must be consistent with 30 CFR Part 808, Sections 843.11, 843.12, 843.19, and Subchapter G (Permit Systems). State regulations which establish the procedural requirements related to civil and criminal penalties and sanctions must be the same as or similar to the procedures in Section 518 and 521 of SMCRA and must be consistent with 30 CFR Parts 808, 843, 845, and Subchapter G.

3. *Other State Program Elements*—If a state provision is neither a state window alternative nor a procedure or sanction related to inspection and enforcement, then the standard to be applied in evaluating each element is whether the state provision is consistent with the corresponding provision of the federal regulations and in accordance with the relevant section of SMCRA, as set forth in 30 CFR 732.15(b) for each of the 16 state program requirements. Under Section 505 of SMCRA and 30 CFR 730.11, state provisions which provide more stringent land use and environmental controls are not to be considered to be inconsistent with the federal requirements.

The procedure and timetable for the Secretary's review of state programs was initially published March 13, 1979 (44 FR 15326), to be codified at 30 CFR Part 732.

As a result of the litigation in the U.S. District Court for the District of Columbia discussed below the deadline for states to submit proposed programs was extended by August 3, 1979, to March 3, 1980. Section 732.11(d) required that if all required and fully enacted laws and regulations were not part of the program by November 15, 1979, the program would be disapproved. Because the submission deadline had been changed to March 3, 1980, 30 CFR 732.11(d) was amended to provide that program submissions that do not contain all required and fully enacted laws and regulations by the 104th day following program submission will be disapproved pursuant to the procedures for the Secretary's initial decision in § 732.13 (45 FR 33927, May 20, 1980).

The New Mexico program was submitted to OSM on February 28, 1980. The 104th day after February 28 was June 11, 1980.

The Secretary in reviewing state programs, is complying with the provisions of Section 503 of SMCRA, 20 U.S.C. 1253, and 30 CFR 732.15. With respect to the New Mexico program, the Secretary has used as criteria the federal rules as corrected, amended, and suspended in the Federal Register notices cited above under "General Background on the Permanent Program," and as affected by three recent decisions of the U.S. District Court for the District of Columbia in *In re: Permanent Surface Mining Regulation Litigation* (Civil Action No. 79–1144, February 26, May 16, and August 15, 1980). That litigation is a consolidation of several lawsuits challenging the Secretary's permanent regulatory program.

There have been three recent decisions from the District Court that affect the decision-making process. Because of the complex litigation, the court has issued its decision in two "rounds." The Round I opinion, dated February 26, 1980, rejected several generic attacks on the permanent program regulations, but resulted in suspension of remand of all or part of twenty-two specific regulations. The Round II opinion, dated May 16, 1980, rejected additional generic attacks on the regulations but remanded some 40 additional parts, sections or subsections of the regulations.

The court in its Round II opinion also ordered the Secretary to "affirmatively disapprove, under Section 503 [of SMCRA], those segments of a state program that incorporate a suspended or remanded regulation" (Mem. Op., May 16, 1980, p. 49). However, on August 15, 1980, the court stayed this portion of its opinion. The effect of this stay is to allow the Secretary, to approve the state program provisions equivalent to remanded or suspended federal provisions in the three circumstances described in paragraph 1 below.

Therefore, the Secretary is applying the following standards to the review of state program submissions:

1. The Secretary need not affirmatively disapprove state provisions similar to those federal regulations which have been suspended or remanded by the District Court where the state has adopted such provisions in a rulemaking or legislative proceeding which occurred either (1) before the enactment of SMRCA or (2) after the date of the Round II District Court decision, since such state regulations clearly are not based solely upon the suspended or remanded federal regulations. (3) The Secretary need not affirmatively disapprove provisions based upon suspended or remanded federal rules if a responsible state official has requested the Secretary to approve them.

2. The Secretary will affirmatively disapprove all provisions of a state program which incorporate suspended or remanded federal rules and which do not fall into one of the three categories in paragraph one, above. The Secretary believes that the effect of his "affirmative disapproval" of a section in the state's regulations is that the requirements of that section are not enforceable in the permanent program at the federal level to the extent they have been disapproved. That is, no cause of action for enforcement of the provisions,

to the extent disapproved, exists in the federal courts, and no federal inspection will result in notices of violation or cessation orders based upon the "affirmatively disapproved" provisions. The Secretary takes no position as to whether the affirmatively disapproved provisions are enforceable under state law and in state courts. Accordingly, these provisions are not being pre-empted or suspended, although the Secretary may have the power to do so under Section 505(b) of SMCRA and 30 CFR 730.11.

3. A state program need not contain provisions to implement a suspended or remanded regulation and no state program will be disapproved for failure to contain a suspended regulation.

4. A state must have authority to implement all permanent program provisions of SMCRA, including those provisions of SMCRA upon which the remanded or suspended regulations were based.

5. A state program may not contain any provision which is inconsistent with a provision of SMCRA.

6. Programs will be evaluated only on provisions other than those that must be disapproved because of the court's order. The remaining provisions will be approved unconditionally, conditionally approved, or disapproved, in whole or in part, in accordance with 30 CFR 732.13.

7. Upon promulgation of new regulations, to replace those that have been suspended or remanded, the Secretary will afford states that have approved or conditionally approved programs a reasonable opportunity to amend their programs, as appropriate. In general, the Secretary expects that the provisions of 30 CFR 732.17 will govern this process.

A list of the regulations suspended or remanded as the result of the Round I and Round II litigation was published in a previous Federal Register notice on July 7, 1980 (45 FR 45604). OSM completed an initial review of the New Mexico program submission and published in the July 11, 1980 Federal Register (45 FR 46823) notice of the availability of a list of the provisions proposed for disapproval. At that time the Secretary requested public comment on the proposed list. In making today's decision, the Secretary has considered all public comments on this issue and has identified those provisions which he must affirmatively disapprove in the New Mexico program as part of this approval. That notice was also described in detail at the public hearing in Albuquerque on July 23, 1980.

On October 16, 1980, the State of New Mexico advised OSM of the decision of the New Mexico Coal Surface Mining Commission on program provisions based on suspended or remanded federal regulations (Administrative Record No. NM-140). The Commission decided that all sections of New Mexico's regulations will remain in effect until such time as they are amended after public hearing and that any action taken by OSM to suspend or retain these sections will not, as a matter of State law, affect New Mexico's regulations. The State did not request that the Secretary approve State regulations based on suspended and remanded federal regulations therefore, the Secretary has affirmatively disapproved those provisions under 30 CFR 931.12 (adopted below).

To codify decisions on State programs, federal programs, and other matters affecting individual States, OSM has established a new Subchapter T of 30 CFR Chapter VII. Subchapter T will consist of Parts 900 through 950. Provisions relating to New Mexico will be found in 30 CFR Part 931.

C. Background on the New Mexico Program Submission

On February 28, 1980, OSM received a proposed regulatory program from the State of New Mexico. The program was submitted by the Energy and Minerals Department, Division of Mining and Minerals, the agency which will be the primary regulatory authority under the New Mexico permanent program. Notice of receipt of the submission initiating the program review was published in the March 5, 1980, Federal Register (45 FR 14230-14231) and in newspapers of general circulation within the State. The announcement noted information for public participation in the initial phase of the review process relating to the Regional Director's determination of whether the submission was complete.

On April 15, 1980, a public review meeting on the program and its completeness was held by the Regional Director in Albuquerque, New Mexico. April 24, 1980, was the close of the public comment period on completeness, which had begun March 5, 1980.

On May 1, 1980, the Regional Director published notice in the Federal Register announcing that he had determined the program to be complete (45 FR 29072). The notice specified that the submission included all elements required by 30 CFR 731.14(c).

On June 11, 1980, the Energy and Minerals Department, Division of Mining and Minerals, submitted amendments to the February 28, 1980, New Mexico program which contained:

1. A copy of the regulations enacted by the State of New Mexico on May 15, 1980. These enacted regulations contained a number of changes from the proposed regulations which were submitted on February 28, 1980.

2. Responses to questions raised during the Regional Director's review of the New Mexico program submission which were presented to the Division of Mining and Minerals in a letter dated April 28, 1980.

On June 18, 1980, the Regional Director published notice in the Federal Register (45 FR 41160-41162) and in the newspapers of general circulation within the State that the revisions to the New Mexico permanent program submission were available for public review and comment. The notice set forth procedures for the public hearing and comment period on the substance of the New Mexico program.

On July 23, 1980, the Regional Director held a public hearing on the New Mexico submission in Albuquerque, New Mexico. The public comment period on the New Mexico permanent regulatory program ended on July 28, 1980.

On August 1, 1980, the Regional Director submitted to the Director of OSM his recommendation that the New Mexico program be conditionally approved, together with copies of the transcript of the public meeting and the public hearing, written presentations, exhibits, copies of all public comments received and other documents comprising the administrative record.

Subsequent to the close of the original public comment period, the Energy and Minerals Department, Division of Mining and Minerals submitted an Attorney General's opinion and its General Counsel's opinion, both dated August 7, 1980, explaining the relationship of certain provisions in the New Mexico State permanent regulatory program to the federal permanent regulatory program (Administrative Record number NM 99). The public comment period was opened on September 4, 1980, and closed again on September 11, 1980 for consideration of these opinions (45 FR 58594, September 4, 1980).

On August 20, 1980, the Director of OSM published in the Federal Register a notice of the availability of the views on the New Mexico program submitted by the Administrator of the Environmental Protection Agency, the Secretary of Agriculture, and other federal agencies (45 FR 55479-55480).

On August 22, 1980, the Director cabled the division of Mining and Minerals, asking whether there were provisions in the New Mexico program based upon remanded or suspended federal rules which the Division did not want the Secretary to affirmatively

disapprove. On October 16, 1980, the State replied that there were no such provisions. (Administrative Record No. NM-140).

On September 5, 1980, representatives of the State of New Mexico met with representatives of OSM, and on September 10, 1980, the Director of the Division of Mining and Minerals, Energy and Minerals Department, State of New Mexico, sent additional material to the Director, OSM.

On September 16, 1980, the Administrator of the Environmental Protection Agency transmitted his written concurrence on the New Mexico program.

On September 30, 1980, the Director of OSM recommended to the Secretary that he conditionally approve the New Mexico program.

On December 2, 1980, the State of New Mexico agreed to the conditions set forth below in 30 CFR 931.11 (Administrative Record No. NM-141).

D. Secretary's Findings

1. In accordance with Section 503(a) of SMCRA, the Secretary finds that New Mexico has, subject to the exception in findings 4(a)(iii), 4(b), 4(c)(x), 4(c)(xix), 4(d)(vi), 4(e), 4(h), 4(j)(i), 4(k)(ii), 4(l)(iii), 4(l)(v), and 4(o) below, the capability to carry out the provisions of SMCRA and to meet its purpose in the following ways:

(a) The New Mexico Surface Mining Act (NMSMA) and the regulations adopted thereunder provide for the regulation of surface coal mining and reclamation operations on non-Indian and non-federal lands in New Mexico in accordance with SMCRA;

(b) The New Mexico program provides sanctions for violations of New Mexico laws, regulations or conditions of permits concerning surface coal mining and reclamation operations, and these sanctions meet the requirements of SMCRA, including civil and criminal actions, forfeiture of bonds, suspensions, revocations, and withholding of permits, and the issuance of cease-and-desist orders by the New Mexico Division of Mining and Minerals or its inspectors;

(c) The New Mexico Division of Mining and Minerals has sufficient administrative and technical personnel and sufficient funds to enable New Mexico to regulate surface coal mining and reclamation operations in accordance with the requirements of SMCRA;

(d) New Mexico law provides for the effective implementation, maintenance, and enforcement of a permit system that meets the requirements of SMCRA for the regulation of surface coal mining and reclamation operations on non-Indian and non-federal lands within New Mexico;

(e) New Mexico has established a process for the designation of areas as unsuitable for surface coal mining in accordance with Section 522 of SMCRA, 30 USC 1272;

(f) New Mexico has established, for the purpose of avoiding duplication, a process for coordinating the review and issuance of permits for surface coal mining and reclamation operations with other federal and State permit processes applicable to the proposed operations;

(g) New Mexico has fully enacted regulations consistent with regulations issued pursuant to SMCRA, subject to the exceptions discussed below in findings 4(a)(iii), 4(b), 4(c)(x), 4(c)(xix), 4(d)(vi), 4(e), 4(h), 4(j)(i), 4(k)(ii), 4(l)(iii) 4(l)(v), and 4(o).

2. As required by Section 503(b)(1)-(3) of SMCRA, 30 USC 1253(b)(1)-(3), and 30 CFR 732.11-732.13, the Secretary has, through OSM:

(a) Solicited and publicly disclosed the views of the Administrator of the Environmental Protection Agency, the Secretary of Agriculture, and the heads of other federal agencies concerned with or having special expertise pertinent to the proposed New Mexico program;

(b) Obtained the written concurrence of the Administrator of the Environmental Protection Agency with respect to those aspects of the New Mexico program which relate to air or water quality standards promulgated under the authority of the Clean Water Act, as amended, 33 USC 1151-1175, and the Clean Air Act, as amended, 42 USC 7401 *et seq.*; and

(c) Held a public review meeting in Albuquerque, New Mexico, on April 15, 1980, to discuss the New Mexico program submission and its completeness, and held a public hearing in Albuquerque, New Mexico, on July 23, 1980, on the substance of the New Mexico program submission.

3. In accordance with Section 503(b)(4) of SMCRA, 30 USC 1253(b)(4), the Secretary finds that the State of New Mexico has the legal authority and qualified personnel necessary for the enforcement of the environmental protection standards of SMCRA and 30 CFR Chapter VII.

4. In accordance with 30 CFR 732.15, the Secretary finds, on the basis of information in the New Mexico program submission, including the section-by-section comparison of the New Mexico law and regulations with SMCRA and 30 CFR Chapter VII, public comments, testimony and written presentations at the public hearings, and other relevant information, that: (a) The New Mexico program provides for New Mexico to carry out the provisions and meet the purpose of SMCRA and 30 CFR Chapter VII. Approval is based upon the following representations made by New Mexico concerning New Mexico law:

(i) The Secretary was concerned about the equivalency of several definitions submitted as a part of the New Mexico program. One of the definitions questioned was that which the State submitted for a "cemetery." It appears that the State definition found in 58-17-3 NMSA 1978, is more limiting than the Federal definition found in 30 CFR 761.5. The State admitted that it was more limiting, but presented a local condition as justification for the variation (Administrative Record number NM 89). With New Mexico's long history of settlement by Indian and Spanish peoples, bodies were often buried in places that no longer show any indication that such an action did occur. 30 CFR 761.11 describes a cemetery as one of the areas in which mining is prohibited. New Mexico's definition accomplishes the same aim in areas where grave sites are known to exist. New Mexico has also submitted, as a part of the program, the appropriate State statutes covering the manner in which unexpected graves are to be handled, and these provisions assure adequate protection of human remains. Further, protections in the manner of prevention of disturbance of Indian grave sites are provided in Joint Resolution—American Indian Religious Freedom, Pub. L. 95-341. The Secretary believes that the New Mexico definition and the specific State provisions guaranteeing full protection to discovered graves is in accordance with 30 CFR 761.11.

(ii) The Secretary was also concerned about the definition that New Mexico had developed for "historic lands." The New Mexico definition, contained in the Cultural Properties Act, Section 18-6-1, is not in accord with the definition found in 30 CFR 762.11, insofar as it omits references to "paleontological sites" and "sites having religious or cultural significance to native Americans or religious groups." New Mexico explained that the (1) paleontological sites are covered as sites having scientific value under regulation 3-12(b)(2), and (2) sites having religious or cultural significance to native Americans or religious groups are protected under New Mexico law (Administrative Record No NM 119). Based on these representations the Secretary finds the New Mexico program acceptable in this area.

(iii) The New Mexico definition of "unconsolidated streamlaid deposits

holding streams", contained in State regulation 1-5, effectively excludes ephemeral streams. As a condition of approval, the Secretary requires that, in order to protect allevial valley floors consistent with 30 CFR 701.5 and 30 CFR Part 822, the definition of "unconsolidated streamlaid deposits holding streams" must include ephemeral streams.

(b) New Mexico has formally proposed only the following alternate approach to the requirements of 30 CFR Chapter VII, pursuant to 30 CFR 731.13, although other provisions of the New Mexico program (See Findings 4(c)(xvii) and 4(d)(v) may meet the standards for such an alternative:

Performance Standards for Backfilling and Grading. Section 515(b)(3) of SMCRA states that the general performance standards shall require an operator "to backfill, compact (where advisable to insure stability or to prevent leaching of toxic materials) and grade in order to restore the approximate original contour of the land with all highwalls, spoil piles, and depressions eliminated (unless small depressions are needed in order to retain moisture to assist revegetation or as otherwise authorized pursuant to this Act)." 30 CFR 816.102(a)(2) implements the statutory directive by stating that, "in all cases the high wall shall be eliminated." New Mexico has proposed an alternative that would allow the retention of limited stretches of highwall if such features are part of the natural landscape of the mine area prior to mine operations. New Mexico Regulation 20-102(a)(2) allows the retention of portions of the highwall if an operator can demonstrate to the Director that:

—The highwall will have a static safety factor of 1.3;
—The highwall will not pose a hazard to persons or wildlife in the area;
—The highwall will be backfilled to cover the uppermost minable coal seam to a minimum depth of 4 feet;
—The retained portion of highwall will not exceed 800 feet in length, and shall be at a minimum of at least 3,000 feet from any other portion of any other highwall which has been approved as a part of the postmining land use;
—The highwall is necessary to replace cliff-type habitats that existed in the natural topography prior to mining; and
—The ends of the highwall left standing will be contoured into the surrounding topography with slopes of 3:1 or less.

If an operator can demonstrate to the satisfaction of the Director that *all* of these criteria can be met, then the alternative of limited highwall retention is available. Such retention in these instances actually reflects the intent of "approximate original contour" since these features were part of the natural pre-mined landscape. In all other cases, the highwall must be eliminated according to 30 CFR 816.102.

New Mexico argues that the language in SMCRA Section 515(b)(3) creates two distinct requirements that often conflict in the specific coal mining districts of New Mexico (Administrative Record number NM 89). In certain areas of the State, the elimination of all highwalls is diametrically opposed to the concept of return to approximate original contour due to the natural features of the landscape. New Mexico believes that there are positive environmental benefits to be gained from a return to approximate original contour (AOC) if the retained highwalls can be demonstrated to be stable. Such highwalls conforming to the topography of the area will preserve wildlife habitat as required under Section 515(b)(25) of SMCRA. Consequently, the State maintains that the return to AOC should take precedence over the elimination of highwalls.

In reviewing New Mexico's proposed alternative, the Secretary considered the circumstances unique to New Mexico (See Administrative Record No. NM 89). New Mexico has a complex and highly variable terrain due to the occurrence of four unique Physiographic Provinces. Of these Provinces, the Colorado Plateau is probably the most significant in terms of cliff topography. The Colorado Plateau is characterized by: structural geology which consists of extensive areas of nearly horizontal formations; structural upwarps that form striking topographic features; igneous structures; and widespread uplifting of as much as 3 miles since the cretaceous; great altitude; a drainage system consisting of deeply incised, steep-walled canyons; aridity and shortage of water; extensive areas of bare rock; sparse vegetation and sparse population; and brightly colored and highly varied desert scenery. While this set of features is descriptive of the entire Colorado Plateau, it most certainly specifically applies to the San Juan Basin. These same features are found to a lesser degree in the other Provinces of New Mexico.

The most striking feature in the San Juan Basin itself is the sandstone capped mesa which possesses cliffs ranging from a few feet to more than 100 feet in height. This mesa type topography has a direct influence on the species of plants and animals that inhabit the area. The rocky slopes, cliffs, and mesa top areas support more than 200 species of plants that do not grow in the colluvial filled valleys of the San Juan Basin. These plant species are growing in places where their root systems are in a more mesic environment than occurs in the deeper, finer colluvial soils of the surrounding valleys. This mesic environment is the result of moisture infiltrating into the joints and fractures of the bedrock. Precipitation concentrated in crevasses increases the amount of moisture per unit area available to the plants.

Exposed vertical bedrock areas produce a more mesic environment at the base of many cliffs. This is due to the fact that most of the moisture emanating from any precipitation event drains down the face of a cliff and concentrates in the soils or the weathered and fractured bedrock near the base. The largest concentrations of browse shrubs occur near these cliff bases. These cliff areas also provide places where trees and shrubs prevalent at higher elevations can find refuge and survive in an otherwise hostile environment. Because of the unique association of cliff areas and floristics in the San Juan Basin, numerous species of fauna rely upon this type of topography for shelter, food, and protection.

In addition to this concept of habitat preservation the Secretary is also concerned with the aesthetic beauty of the natural rugged mesa type-areas in the San Juan Basin. The disruption of this natural landscape form by the substitution of an unnatural rolling hill topography does not meet the purposes of SMCRA. A reclamation process incorporating stretches of highwall duplicating the natural mesa and cliff features is fully in concert with the concept of approximate original contour. Support for this provision was provided by public interest groups with some reservations about the composition of the feature to be left as well as the magnitude relative to what previously existed (See Administrative Record No. NM 79). The Secretary feels that this concern can be adequately addressed by the addition of another provision to the criteria enumerated in the New Mexico regulation. As a condition of approval, New Mexico will include as a criterion, a statement that residual highwalls will not exceed the length of the pre-mined bluff. The addition of this provision to the criteria already established will guarantee the proper usage of this alternative.

The Secretary finds that the New Mexico provisions allowing certain limited stretches of highwall to remain

after mining are an acceptable means of implementing Sections 515 and 516 of SMCRA.

In accordance with 30 CFR 731.13, the Secretary finds that:

(A) The proposed alternative contained in the New Mexico program is in accordance with Sections 515(b)(3) and 515(b)(25) of SMCRA because the State program provides that approximate original contour is achieved, the requirements for stability are the equivalent of the federal requirements, and wildlife habitat is preserved, and

(B) The proposed alternative is necessary because of the local conditions.

In accordance with 30 CFR 732.15(b), the Secretary finds the alternative, as conditioned, to be in accordance with the provisions of SMCRA and consistent with the regulations in 30 CFR Chapter VII.

(c) The Energy and Minerals Department, Division of Mining and Minerals, has the authority under New Mexico laws and regulations to implement, administer, and enforce all applicable requirements consistent with 30 CFR Chapter VII, Subchapter K, and the New Mexico program includes provisions to carry out those provisions. The New Mexico law and regulations on performance standards are consistent with SMCRA and 30 CFR Chapter VII, Subchapter K. The following specific issues were considered by the Secretary in evaluating New Mexico law and regulations on performance standards:

(i) Section 20–11 of the New Mexico regulations in the original submission did not clearly state that road markers would be required in addition to perimeter markers. In order to be certain that road markers would not be allowed in lieu of perimeter markers, New Mexico was asked to clarify the provision (See Administrative Record No. NM 58). Written assurance to the Secretary, was provided that what was intended by the State was a requirement for road markers in addition to perimeter markers (See Administrative Record No. NM 89).

New Mexico requires more in the way of signs and markers than 30 CFR 816.11 and 30 CFR 817.11. The State anticipates permitting a number of mines that will be located some distance from a well travelled road. In these instances the State will require signs along the access road to the mine at one mile intervals. This is in addition to the requirement for perimeter markers which is consistent with the federal regulation. The Secretary finds that the New Mexico provision is consistent with 30 CFR 816.11 and 30 CFR 817.11.

(ii) In Section 20–22 of the New Mexico regulations the State adds language not contained in 30 CFR 816.22. The language allows an operator to request a variance from the Director for stripping an area of topsoil if the operator can demonstrate that the removal of topsoil in that area would be technologically infeasible. While noting that the concept is consistent with 30 CFR 816.22(b), which allows the authority to approve alternatives on a case-by-case basis, the Secretary felt that some outside bounds should be placed on the provision. New Mexico responded that the provision will be used only to the extent necessary to insure the safety of equipment operators removing topsoil materials from areas such as the unstable edges of mesa tops, steep outslopes covered with large boulders, or steep slopes which were covered with a thin veneer of soil over bedrock material (See Administrative Record No. NM 89). The State pointed out that the provision places an affirmative burden upon an operator to demonstrate infeasibility to the satisfaction of the Director. This approach allows changing technology to be incorporated into each specific decision made by the Director in a manner that specific slope limitations would not. The Secretary finds that New Mexico provision to be consistent with 30 CFR 816.22, based on New Mexico's representation as to the scope of the variance stated above.

(iii) In the original submission New Mexico provided a different methodology for sediment control in New Mexico regulation Section 20–41 and 20–42 than that developed in 30 CFR 816.41 and 816.42. The State was asked to provide a full justification and development of the concept of regional difference (See Administrative Record No. 58). In the regulations promulgated on May 15, 1980, and submitted to the Secretary on June 11, 1980, the State had changed the approach sufficiently to make New Mexico regulations 20–41 and 20–42 consistent with the comparable federal provisions.

The New Mexico regulations as promulgated follow the dictate of 30 CFR 816.41(d)(1) to utilize "changes in the flow of drainage in preference to the use of water treatment facilities." The State has adopted this concept and has listed examples of the types of techniques that might be used. The additional requirement, not present in 30 CFR 816.41, that such drainage control structures be capable of containing and eliminating all surface flow that would result from a 10-year, 24-hour precipitation event has been added in the New Mexico provision. The State provision also requires that an operator must submit drainage basin information and the proposed designs of such control structures as part of a permit application. The Director then has the necessary information to determine whether these changes in the drainage pattern are adequate to contain the hypothetical event. If they are not, adequate water treatment facilities are then required. These changes have made the New Mexico provisions consistent with the requirements of SMCRA and the regulations promulgated thereunder.

(iv) New Mexico regulation 20–52 describes the requirements for surface and ground water monitoring to which an operator must adhere. The Secretary initially questioned whether the language in the New Mexico provision clearly requires an operator to perform specific tests requested by the Director (See Administrative Record No. 58). The Secretary, upon reevaluation of the New Mexico language, is satisfied that the provision is acceptable.

(v) New Mexico was asked to explain the role of the State Engineer in New Mexico regulation 20–54. The Secretary was concerned about the position of decision-making authority in the area of water rights and water replacement. New Mexico explained that the authority for enforcement and regulation of the NMSMA remains with the Director in all instances (See Administrative Record No. NM 89). The specific approval by the State Engineer of any water replacement plan under 20–54 is but one aspect of compliance which must be met by an operator in addition to final mine plan approval by the Director. New Mexico feels that the State Engineer's Office has specific expertise which enables it to play a vital role in the decision-making process concerning water replacement. New Mexico also notes that the State Engineer has specific authority stemming from a separate statute to approve any dewatering caused by mining. This separate statutory authority is consistent with the intent of SMCRA.

(vi) New Mexico was asked by the Secretary to include language contained in 30 CFR 817.61, enumerating the types of blasting activities associated with underground mining which are to be regulated (See Administrative Record No. NM 58). This has been accomplished by the addition of Section 20–61(d) which is consistent with 30 CFR 817.61.

(vii) New Mexico regulation 20–112 as it was originally submitted appeared to be less stringent than the federal requirement contained in 30 CFR 817.112. The State had omitted language

requiring that a "diverse, effective, and permanent cover" be established. The Secretary requested that this language be incorporated into the New Mexico provision (See Administrative Record No. NM 58). The State responded by pointing out that the New Mexico provision governs both surface and underground mining while the federal system employs two distinct provisions, 30 CFR 816.112 and 30 CFR 817.112 (See Administrative Record No. NM 89). New Mexico correctly pointed out that these two provisions contain different standards for revegetation. 30 CFR 817.112, the section covering underground mining, establishes a less stringent standard for the substitution of introduced species than does 30 CFR 816.112. In developing its provision New Mexico has created a requirement equivalent to 30 CFR 816.112. The New Mexico standard governs both surface and underground mining and instills a stricter standard upon the underground operator than 30 CFR 817.112. The Secretary agrees with the New Mexico interpretation, and finds that 20-112 is acceptable.

(viii) New Mexico regulation 20-115 allows an operator to demonstrate that reclaimed land is *capable* of supporting livestock, grazing, if grazing is to be the postmining land use. The federal counterpart, 30 CFR 816.115 requires actual grazing on and mandatory crop production from lands proposed as pasture or farmlands as a postmining use. The Secretary finds that the New Mexico standard is consistent with the intent of SMCRA as interpreted by the U.S. District Court for the District of Columbia on February 26, 1980 (p. 59). The Court Opinion remanded the federal regulation on the basis that it exceeded the statutory authority of SMCRA which requires only that restored lands be "capable" of supporting the designated use. Thus, the New Mexico standard is acceptable.

(ix) New Mexico was asked by the Secretary to clarify the concepts of "acceptable techniques of ecological measurement" and "historic record" as they were used in New Mexico regulation 20-116 (See Administrative Record No. NM 58). New Mexico responded in a letter to Mr. Rocky Beavers of the Region V OSM Office dated April 28, 1980 (See Administrative Record No. NM 102). "Historic record" is a body of data and information accumulated over a period of time that includes both cover and production. The concept of "acceptable techniques of ecological measurement" includes measurements of cover, production, density and diversity measured by quantifiable and not merely subjective means. The Secretary finds, based on these explanations, that 20-116 is consistent with the requirements of SMCRA and 30 CFR 816.116 and 30 CFR 817.116. New Mexico was also asked to incorporate the concept of "half-shrub" into the definition of shrub (See Administrative Record No. NM 58). In the regulations that were promulgated on May 15, 1980, New Mexico defined "half-shrub" separately, in Section 1-5, consistent with the federal definition. This is acceptable to the Secretary and makes 20-116 consistent with 30 CFR 816.116.

New Mexico was also asked to define the term "augmentation" (See Administrative Record No. NM 58). In the regulations that were promulgated on May 15, 1980, in regulation 1-5, this was done in a manner acceptable to the Secretary.

New Mexico regulation 20-116 as originally submitted omitted the term "ground cover". The Secretary was concerned that a problem would be created when this provision was linked with the bonding principles. The State was asked to include the term in its regulation (See Administrative Record No. NM 58). In the regulation promulgated May 15, 1980 the State has included the term.

(x) In the original submission of February 28, 1980, New Mexico regulation 20-117 did not contain specific stocking rates for trees and shrubs as in 30 CFR 816.117. In New Mexico regulation 20-117(b)(1), as promulgated on May 15, 1980, the State places the determination of minimum stocking rates under the authority of the State forester. In a letter, dated September 10, 1980, to Ed Kelly, Chief, Bureau of Surface Mining, the State forester explained the bases for his determinations of minimum stocking rates. The Secretary finds this explanation an insufficient basis on which to find that the State forester will assure stocking at rates which equal or exceed the federal standards and has made the correction of this deficiency a condition of approval. The State may wish to submit additional information meeting the requirements of 30 CFR 731.13 in meeting this condition of approval.

Note.—Paragraphs (xi)-(xvi) below relate to performance standards for roads. Since the federal rules on roads were remanded by the District Court, any problems or issues mentioned in these paragraphs do not constitute a basis for approval or disapproval of the New Mexico program. These paragraphs are printed here for purposes of providing a complete discussion of the review process.

(xi) New Mexico regulation 20-150 as originally submitted did not contain a requirement that all road design be certified by a registered professional engineer. This requirement was added to the regulation as it was promulgated on May 15, 1980. Since the District Court remanded 30 CFR 816.150, the federal rule analogous to New Mexico's Section 20-150, New Mexico's provision need not be evaluated against the federal rule.

(xii) Section 20-152 of the New Mexico regulations allows surface shaping as a technique for erosion control in lieu of revegetation. The Secretary requested further clarification to be certain that equivalent environmental protection is achieved (see Administrative Record No. NM 58). New Mexico responded that this technique was added specifically to be certain that a sound methodology was present in the regulations for dealing with the situation where a road is cut through bedrock outcrops. In that specific case, covering slopes with topdressing material in preparation for attempts to revegetate would be futile. The topdressing would not remain in place and this would lead to erosion problems and high sediment contributions to runoff water. The State asserted that the only viable method for handling erosion control in that specific situation is the use of surface shaping (see Administrative Record No. NM 89). The Secretary agrees that this is consistent with Section 515(b)(17) of SMCRA. Since the District Court remanded 30 CFR 816.152, the federal rule analogous to New Mexico's Section 20-152, New Mexico's provision need not be evaluated against the remanded federal rule.

The Secretary was also concerned that New Mexico had omitted from Section 20-152, requirements present in 30 CFR 816.152 detailing specifications for base material, and requirements calling for structural foundation analysis, compaction design specifications, lift limits and moisture content (see Administrative Record No. NM 58). In the regulation as promulgated on May 15, 1980, New Mexico has included these requirements. The Secretary agrees that this is consistent with Section 515(b)(17) of SMCRA. Since the District Court remanded 30 CFR 816.152, the federal rule analogous to New Mexico's Section 20-152, New Mexico's provision need not be evaluated against the federal rule.

(xiii) New Mexico regulation 20-156 calls for the restoration of natural drainage at such times as roads are reclaimed unless it can be demonstrated

to the Director that such restoration will not enhance environmental values. The Secretary is concerned about the intent of this provision which differs from the absolute requirement in 30 CFR 816.156 for restoration of natural drainage. In explaining the regulation, New Mexico stated that this latitude was necessary to deal with specific instances where environmental damage could be minimized by using a different drainage pattern than that which was present prior to mining (see Administrative Record No. NM 89). New Mexico pointed out as an example a situation in which a culverted road created during the mining process crosses a drainage above a deep headcutting area in an arroyo. The headcutting commenced prior to mining. The culverted crossing serves to impede the flow of flood waters and leads to reduced headcutting. The retention of the culverted crossing as part of the reclamation plan would serve to enhance environmental protection by slowing the erosion headcutting to a greater degree than would the restoration of the natural drainage. The State feels and Secretary agrees, that the retention of such structures might, in some cases, achieve the long term benefit of reduced erosion. The Secretary believes that this is consistent with the requirements of Sections 515(b)(4), 515(b)(10), and 515(b)(17) of SMCRA. Since the District Court remanded 30 CFR 816.156, the federal rule analogous to New Mexico's Section 20-156, New Mexico's provision need not be evaluated against the federal rule.

(xiv) New Mexico's regulation 20-171 allows the use of stream fords as a general practice for Class III roads. 30 CFR 816.171 allows fords only in situations of a temporary nature. The Secretary is concerned about this apparent contradiction. New Mexico explained that the usage of such roads will certainly be limited (Administrative Record number NM 89). New Mexico envisions allowing this practice in connection with roads that are used on an infrequent basis for carrying out environmental monitoring tasks. New Mexico realizes that the concern with the usage of such fords is the possibility of contributing additional sediment loads to stream waters. The State points out that these fords will be allowed only in dry arroyo situations. The State has also agreed to include a stipulation in all permits that prohibits the use of the drainage grade crossing at any time when water is flowing. The Secretary believes that this explanation and agreement by the State insures that the New Mexico regulation will provide a degree of protection that is consistent with Section 515(b)(18) of SMCRA. Since the District Court remanded 30 CFR 816.171, the federal rule analogous to New Mexico's Section 20-171, the federal rule analogous to New Mexico's Section 20-171, New Mexico's provision need not be evaluated against the federal rule.

(xv) New Mexico regulation 20-173 does not specify a culvert design size sufficient to pass a 1-year 6-hour precipitation event as the standard for Class III roads. The Secretary noted this omission in OSM's review and informed the State (Administrative Record Number NM 58). New Mexico responded that the design criteria specified in 30 CFR 816.173 may, in some instances, not be of sufficient size to safely pass runoff from intense thunderstorms that are not classifiable under the 1-year 6-hour event criteria. New Mexico wants to retain the prerogative to require larger culverts in specific areas of the State (Administrative Record Number NM 58). The Secretary finds that this is consistent with the requirements of Sections 515(b)(10) and 515(b)(17) of SMCRA. Since the District Court remanded 30 CFR 816.173, the federal rule analogous to New Mexico's Section 20-171, New Mexico's provision need not be evaluated against the federal rule.

(xvi) New Mexico regulation 20-172 has omitted grade limits contained in 30 CFR 816.172. The Secretary requested that these grade limitations be included in the regulation or in the alternative, that the State produce a demonstration of equivalent grade and/or erosion control (Administrative Record Number NM 58). New Mexico responded that Class III roads are considered as light duty roads by the State and that the category may include existing four-wheel drive roads or other existing roads which traverse steep terrain by employing short S-curves (Administrative Record Number NM 89). These roads, which would be subject to limited use, would exceed the standards of the federal provision. Reconstruction of such roads to meet the requirements of 30 CFR 816.172(a)(i) and (iii) would create substantial, unnecessary damage to the environment.

In the case of the construction of new Class III roads, less environmental damage may be done and less land area disturbed under a system which allows the Director to make a case-by-case determination of erosion control methodology. New Mexico cites the case of a road traversing a steep bedrock outcrop area as an example. The Secretary agrees with New Mexico's position and finds that 20-172 is consistent with the requirements of Sections 515(b)(10) and 515(b)(17) of SMCRA. Since the District Court remanded 30 CFR 816.172, the federal rule analogous to New Mexico's Section 20-172, New Mexico's provision need not be evaluated against the federal rule.

(xvii) New Mexico regulation 20-72(b) places discretion in the Director for determining when subdrain systems will be required for fills. The Secretary requested clarification as to the intended extent of this discretion (see Administrative Record No. NM 58). New Mexico explained that subdrain systems will be required in most instances (see Administrative Record No. NM 58). The statement went on to say that the implementation of this provision allows the State the latitude to evaluate each disposal area on a case-by-case basis in relation to size or other alternatives for disposal of excess spoil. New Mexico also noted, and the Secretary agrees, that this discretionary approach is consistent with the suspension of 30 CFR 816.83(a) and 30 CFR 817.83(a) insofar as those regulations preclude an exemption from the underdrain requirement for coal processing waste banks where an operator can demonstrate an alternative to the required subdrainage system would ensure structural integrity of the waste bank and protection of ground and surface water quality.

The State explained further that New Mexico does not have topographical features in coal producing areas which could result in spoil fills being defined as "valley fills" within the meaning of SMCRA. Additionally, there are virtually no coal producing areas where seeps or springs are present so the only drainage to be passed through any constructed subdrain would occur after precipitation events. Because of high natural erosion rates and resulting high sediments loads in runoff, rock drains would be ineffectual. Springs in coal mining areas are rare, and a spoil fill will not be approved in area with a spring or spring drain (Administrative Record No. NM 119). Based on these representations, the Secretary finds that the New Mexico provision is consistent with 30 CFR 816.72 and 817.72.

(xviii) In reviewing the New Mexico program the Secretary raised several questions concerning the consistency of the proposed State provisions with elements of 30 CFR Chapter VII, which were mooted by the decisons of the District Court in the District of Columbia (see Administrative Record No. NM 58).

The provisions which were questioned include:

(A) New Mexico regulation 20–41 and all other regulations in the New Mexico program where the term "permit area" has supplanted the term "mine plan area" the latter of which is used in the federal regulations.

(B) New Mexico regulation 20–83 insofar as it allows discretion to vest with the Director to decide when waste banks are to be permitted without a subdrainage system.

(C) New Mexico regulation 20–111, insofar as it allows an operator to demonstrate capability of production rather than actual achievement of production as a test of revegetation success. In line with the Court opinion, New Mexico does not have to make any regulatory changes at this time. If the Secretary decides to appeal these particular provisions, and is successful, the State will be provided sufficient opportunity to add them to the New Mexico program.

(xix) New Mexico regulation 20–71 inadvertently omits the requirement of 30 CFR 816.71 calling for keyway cuts and rock toe buttresses. The promulgated regulation is written as an incomplete sentence, and the State has agreed to make an appropriate correction as a condition of approval.

(xx) New Mexico regulation 25–11, the functional equivalent of 30 CFR 824.11, differs from its federal counterpart in that it does not require an operator to leave an outcrop barrier during the course of mountaintop removal in certain limited situations. The State explained that, at present, there is no mountain top removal mining within the State, and no such mining is anticipated in the future. The State agreed, if and when such mining occurs in New Mexico, to promulgate an acceptable regulation (Administrative Record No. NM 119). The Secretary, therefore, finds regulation 25–11 acceptable.

(xxi) New Mexico regulation 20–116 does not provide for the approval of the Director, OSM, for any change in the guidelines for measuring success of revegetation as in 30 CFR 816.116. The State explained, however, that at no time does it intend to apply standards that have not been approved by the Secretary (Administrative Record No. NM 119). This representation by the State is part of the approved program, and violation of this undertaking will be deemed by the Secretary to constitute a failure to implement the approved program. The Secretary believes that any person who so wishes could hold the State to this undertaking if the State attempted to change the standards without OSM approval. On this basis, the Secretary finds New Mexico 20–116 acceptable.

(d) The Division of Mining and Minerals has the authority under New Mexico laws and regulations and the New Mexico program includes provisions to implement, administer and enforce a permit system consistent with 30 CFR Chapter VII, Subchapter G. Approval is based on the following considerations and representations made by New Mexico concerning New Mexico law and regulations on permit requirements:

(i) 30 CFR 770.12 requires a demonstration of coordination with other federal, State and local agencies and consultation with State and federal agencies concerning fish and wildlife, related environmental values, and historic, cultural and archeological values. The Secretary is concerned that the original submission did not adequately address the consultation requirements. New Mexico was requested to provide additional clarifying material explaining in greater detail the manner in which the consultation process would work (see Administrative Record No. NM 58). New Mexico provided a letter, signed by both the State Archeologist and the State Historic Preservation Officer, detailing the step-by-step procedures to be followed in the case of cultural properties reviews. New Mexico also provided a copy of a memorandum of agreement between the Fish and Wildlife Service and the State Game and Fish Department, detailing the duties of each in instances when endangered or threatened species are concerned (see Administrative Record No. NM 68). The Secretary is fully satisfied that the State of New Mexico has demonstrated a thorough consultation procedure in accordance with 30 CFR 770.12.

(ii) New Mexico's original submission contained no equivalent to 30 CFR 776.14 detailing the public participation requirements for coal exploration approval. The Secretary asked the State to provide for this, and the regulations promulgated on May 15, 1980, include a Section 6–14 which is consistent with 30 CFR 776.14.

(iii) In reviewing New Mexico regulation 8–19, concern was raised that this provision did not contain a mechanism for ensuring that the regulatory authority would be able to require all of the data from an applicant necessary to make an evaluation of revegetation success (see Administrative Record No. NM 58). In the regulation as promulgated on May 15, 1980, the State added 8–19(a)(8) and (e) which are consistent with 30 CFR 779.19 and 783.19.

(iv) In the original submission, New Mexico regulation 8–20 was drafted in such a manner that it appeared that the applicant would play a role in determining the level of study for fish and wildlife. The Secretary requested that this be clarified (see Administrative Record No. NM 58). In the regulation promulgated on May 15, 1980 the language was changed so that it clearly states that such a determination will be made by the Director in consultation with appropriate agencies. However, 30 CFR 779.20 and 30 CFR 783.20 were remanded by the District Court in its February 26, 1980, opinion and accordingly the State provisions have been affirmatively disapproved.

(v) Section 8–24 of the New Mexico regulations requests the names of present owners of lands adjacent to the permit area *where available.* 30 CFR 779.24 does not contain this limitation. The Secretary requested that New Mexico provide an explanation (see Administrative Record No. NM 58). New Mexico responded that in certain areas of the State, land ownership may not be ascertainable even through diligent efforts (see Administrative Record No. NM 89). The State has numerous Spanish Land Grants which are not required to be recorded with State agencies. The Land Grant may date from the 17th century, and it is possible that the original grantee could have as many as 8,000 descendants, all with some color of title. Many are likely to be completely unaware of their own interest in the property. Rather than require an operator to produce all of those names, the State will require a statement that such land is indeed a Land Grant, and the name of the Grant would be made a part of the public notices. Based on this limited application of the "where available" language, the Secretary finds the New Mexico variant acceptable as a State window under 30 CFR 731.13.

(vi) New Mexico regulation 11–19(0) governing "criteria for permit approval or denial" uses the term "indigenous to the state" in conjunction with coverage for activities that would not affect the continued existence of endangered or threatened species. The placement of this term within the New Mexico regulation expressly limits protection to only those species that are "native, not introduced, or immigrates under its own power into an area." Adequate protection would not be provided to migratory species or species that merely pass through the state periodically, but do not necessarily establish any form of

permanent resident status. The State, in 11–19(0) does adequately protect adverse modification of critical habitats by reference to State and federal law. Reference to the federal law relating to endangered or threatened species, however, is missing within the context of New Mexico's 11–19(0). The Secretary has determined that to adequately reflect the provisions of 30 CFR 786.19(0), a direct reference to the Endangered Species Act of 1973 is needed following the phrase "indigenous to the state." The state has expressed concern over the identified potential conflict of the language in the federal Endangered Species Act with the New Mexico Wildlife Conservation Act and contends that adequate protection is provided under existing State or federal laws. The State cites sections 4(D), 6(C)(1) of the Endangered Species Act of 1973 and 17–2–37,39,40 of the State Wildlife Conservation Act as the basis for its contention.

The Secretary is sensitive to the State's contention and is convinced that the state intended to provide the protection equivalent to 30 CFR 786.19(0). However, the State regulation 11–19(0) as written, does not adequately express this intention and must be corrected as outlined above. The State has agreed to make an appropriate modification as a condition of approval.

The Secretary is also concerned about the reference in this regulation to the State Wildlife Conservation Act. The State Act allows the capture, removal or destruction of endangered species in circumstances which the Endangered Species Act of 1973, Pub. L. 93–205, does not. The Secretary requested that New Mexico state that it clearly recognizes the preemptory effect of the federal law in situations where the two statutes conflict (see Administrative Record No. NM 58). New Mexico has stated to the Secretary that the Endangered Species Act preempts the State Wildlife Conservation Act in this regard. To confirm this the Secretary is specifically setting aside, under Section 505(b) of SMCRA, those portions of the State Wildlife Conservation Act which conflict with provisions of SMCRA related to the Endangered Species Act of 1973.

(vii) New Mexico regulation, 10–19 governing the procedures to be used in surface coal mining and reclamation operations on areas or adjacent to areas including alluvial valley floors, includes language not found in 30 CFR 785.19. New Mexico has added a prudent person test to the determination of an alluvial valley floor's existence based on the capability of an area to be flood irrigated. The Secretary requested a clarification of the manner in which that test would be implemented. New Mexico responded by pointing out that this test is but one of three distinct tests employed separately to determine whether or not sufficient water exists to support agricultural activities (see Administrative Record No. NM 89). It is utilized only in the instance in which the Director attempts to determine whether or not an area is *capable* of being flood-irrigated. If the area under study is being flood-irrigated or has a recent history of flood-irrigation or if it can be determined that subirrigation is present, then the prudent person test is never utilized. This test plays a role only if a determination needs to be made concerning the capability of an area to sustain flood irrigation. The State explains further that such a determination will not rest upon historical antecedents, but upon an economic analysis which fully considers the elements of technological change and long-term climatic change. The State points out that this test is implied in the federal language, for without such a test, many arid areas of appropriate configuation could be initially determined to bear alluvial valley floors. The Secretary agrees with the explanation and finds the provision to be consistent with 30 CFR 785.19.

(viii) New Mexico regulation 9–39 entitled, "Subsidence Information and Control Plan," employs a procedural study approach different from the approach taken in 30 CFR 784.20. The federal regulation requires than an applicant, "shall include a survey which shall show whether structures or renewable resource lands exist within the proposed permit and adjacent area, and whether subsidence, if it occurred, could cause material damage or diminution of reasonably foreseeable use of such structures or renewable resource land." In reviewing this requirement and the preamble to the federal regulations, the Secretary believes that the clear intent is to identify structures and renewable resources subsquent to the establishment of the premise that some subsidence is inevitable and its effects may reach the surface at some point. If any such structures and resources exist, procedures are outlined and implied for determining their initial status and for predicting, monitoring and controlling subsidence if it occurs.

The New Mexico regulation has reversed the procedure. 9–39(1) requires a "map of the proposed permit and adjacent areas identifying the specific areas in which subsidence is anticipated as a consequence of underground operations during the life of the permit." The requirement appears to limit the area of concern to that, "of the proposed permit and adjacent areas," and may, therefore, fail to address the gross relationships of contiguous, permitted underground operations. The requirement addresses, "areas in which subsidence is anticipated * * * during the life of the permit." The permit life of five years is likely to be far too short a time span as subsidence has been known to occur scores of years after mining ceases. The stipulation "anticipated" is not the same standard as the federal language "may occur." That type of standard requires a professional judgment from one with specific expertise in subsidence.

It also infers a position of scientific certainty, which is extremely difficult, if not impossible, to identify. The State explained, however, that it requires a complete description of mining techniques, effects of subsidence description of any structures and renewable resource lands, within the angle of draw above the underground operation (Administrative Record No. NM 119). The Secretary understands this to mean that no permit may be issued in New Mexico unless such information has been provided in the permit application. Based on this representation, the Secretary finds New Mexico regulation 9–39(a)(1) consistent with 30 CFR 784.20.

(e) The New Mexico Division of Mining and Minerals has the authority under New Mexico laws and the New Mexico program includes provisions to regulate coal exploration consistent with 30 CFR 776 and 815, and to prohibit coal exploration that does not comply with 30 CFR 776 and 815. The following specific issue was considered by the Secretary in evaluating New Mexico law and regulations on coal exploration.

New Mexico regulation 19–15, which is the counterpart of 30 CFR 815.15, has added language that allows an exemption to the return to original contour if, "the Director determines that such action would cause excessive environmental degradation". New Mexico explained that the provision is intended to provide the Director with a method to prevent environmental problems such as excessive erosion and excessive sedimentation that might result from reclamation to AOC on exploration sites located in areas with unstable geologic material on slopes that are greater than 3:1 (see Administrative Record No. NM 89).

While the Secretary realizes the potential benefit that might be derived from implementing this provision, he is

not convinced that this is the best method for dealing with the problem. As it stands, the provision is too open-ended, and in order to secure approval the State must place some limitations on this discretion. The Secretary has, therefore, conditioned approval of the New Mexico program upon modification of regulation 19-15 in a manner which is consistent with 30 CFR 815.15.

(f) New Mexico laws and the New Mexico program require that persons extracting coal incidental to government-financed construction maintain information on site consistent with 30 CFR 707.

(g) The Division of Mining and Minerals has the authority under the NMSMA and Section 29-12 of the New Mexico regulations, and the New Mexico program provides provisions to enter, inspect, and monitor all coal exploration and surface coal mining and reclamation operations on non-Indian and non-federal land within New Mexico, consistent with Section 517 of SMCRA and Subchapter L of 30 CFR. Approval is based upon the following representations made by New Mexico concerning New Mexico law:

(i) NMSA 69-25A-21B includes language that is different from the language found in the federal counterpart, Section 517(b)(2) of SMCRA. The federal provision employs the terminology "hydrologic balance of water use," while the State statute uses the phrase "water supply for water users." New Mexico also makes the same substitution in its counterpart to SMCRA Sections 510(b)(3), 515(b) and 516(b)(9). The Secretary requested an Attorney General's Opinion concerning the equivalency of the two phrases (see Administrative Record No. NM 58). The State responded with an Opinion on August 7, 1980. Additionally, the State pointed to NMSA 69-25A-10(b)(1) and Chapter 148, 1980, Laws of New Mexico, sections 4 and 8(A) as providing protection of both water quality and quantity. The Secretary finds that New Mexico adequately protects both water quality and quantity, and its use of the phrase, "water supply for water users," in the context of its program submission, is acceptable. See Administrative Record No. NM 110. The Secretary believes that protection of water users means not only water used directly by people or commercial enterprises, but also water which naturally supports vegetation and wildlife.

(ii) NMSA 69-25A-2H provides that certain material can be kept confidential if required by law. SMCRA Section 517(f) makes no such provision. At a meeting between representatives of the State and OSM on September 5, 1980, New Mexico represented that the only information that could be kept confidential was data on coal production, coal exploration, and archeological sites (Administrative Record No. NM 110). The Secretary understands that only material in those categories which would be deemed confidential under Sections 507(b)(17), 508(a)(12) and 512(b) will remain confidential. Based on this representation, the Secretary finds NMSA 69-25A-2H consistent with SMCRA Section 517(f).

(iii) New Mexico regulation 29-11(c) does not include all of the language of the federal counterpart, 30 CFR 840.11(d)(i), which states that inspections will "be carried out on an irregular basis so as to monitor compliance at all operations, including those which operate nights, weekends, or holidays." The Secretary requested clarifying information stating the policy of the regulatory agency. The State responded that inspections will be conducted whenever necessary including nights, weekends or holidays (Administrative Record No. NM 119). The Secretary finds that this is consistent with the requirements of Section 517(c) of SMCRA.

(iv) New Mexico regulation 29-11(d)(i), the counterpart of 30 CFR 840.12, does not contain the federal language which details that inspections may be carried out without a search warrant. The Secretary requested that New Mexico submit an Attorney General's Opinion explaining that New Mexico law confers a right of entry equivalent to the federal regulation (see Administrative Record No. NM 58). On August 7, 1980, New Mexico complied with this request and provided an Attorney General's Opinion explaining that a search warrant is necessary only to enter a building and inspect if the operator does not consent to entry. This rationale is consistent with the Preamble to the federal regulations at page 15295, and as such, the Secretary finds the provision consistent with 30 CFR 840.12.

(v) The narrative for the New Mexico program discusses "Inspection and Monitoring Pocedures" on page 25. Although New Mexico's regulations clearly require mandatory enforcement, in the third paragraph of the discussion New Mexico indicates that, "when an inspection is made and problem situations are noted, these conditions are immediately brought to the attention of company officials and *remedial action is recommended.*" (emphasis added) New Mexico submitted clarifying information assuring the Secretary that this does not in any way indicate that the enforcement provisions will be compromised both at a meeting held in Washington, D.C. on September 5, 1980 (Administrative Record Number NM 110), and in the September 10, 1980, letter from Emery C. Arnold to Walter M. Heine (Administrative Record No. 119). Based on this representation and the plain meaning of the regulations which clearly prevail over inconsistent narrative, the Secretary finds the New Mexico program provision consistent with federal requirements.

(h) The Division of Mining and Minerals has the authority under New Mexico laws, and the New Mexico program includes provisions to implement, administer, and enforce a system of performance bonds and liability insurance, or other equivalent guarantees, consistent with 30 CFR Chapter VII, Subchapter J, promulgated on March 3, 1979. Portions of the following federal bonding regulations were proposed for amendment on January 24, 1980 (45 FR 6028-6042): 30 CFR 800.5, 800.11(b)(1), 800.13, Part 801, 805.13, 805.14, 806.11, 806.12, 806.13, 806.14, 806.17, 807.12, 808.11, 808.12, and 808.13(a). Final federal regulations on these sections were published on August 6, 1980 (45 FR 52306-52324). The Secretary will approve State program provisions if they are consistent with the federal rules as they existed on the New Mexico program submission date of February 28, 1980, or if they are consistent with the rules as amended on August 6, 1980.

The State adopted portions of OSM's bonding regulations proposed in the January 24, 1980, Federal Register. These include 30 CFR 800.5(SR 1-5), 30 CFR 800.11 (SR 14-11), 30 CFR 801 (SR 14-14, 14-16, 14-19), 30 CFR 805.13 (SR 75-75), 30 CFR 805.74 (SR 15-14), 30 CFR 806.12 (SR 16-12), 30 CFR 806.14 (SR 16-14), 30 CFR 807.12 (SR 17-12), 30 CFR 808.12 (SR 18-12). On August 6, 1980, final bonding regulations were published in the Federal Register. The State regulations listed above have been reviewed against the new federal regulations. Findings are as follows:

(i) The federal regulations (30 CFR 800.5), stipulate that the self-bond must be "* * * executed by the permittee and by each individual and business organization capable of influencing or controlling the investment or financial practices of the permittee by virture of this authority as an officer or ownership of all or a significant part of the permittee, and supported by agreements granting the regulatory authority a security interest in real or personal property pledged to secure performance

by the permittee." The State regulation 1-5, omits this portion of the self-bonding definition. The Secretary finds that this exclusion provides less guarantee of the enforceability of the bond against the company, than the federal counterpart would and conditions his approval on the State remedying this deficiency.

(ii) (30 CFR 800.11(b)(1)) The State in SR 14-11 included two out of three of OSM's alternatives for cumulative bonding regulations. The omission of the third may have been inadvertent. However, the State regulation without the third alternative is as stringent as the federal rule and the Secretary will require no change. If the State wishes to add the third alternative it may propose to amend the program under the procedures set forth in 30 CFR 732.17.

(iii) The federal regulations (30 CFR 801.11(a)(1)) provide for the applicability of "* * * surface construction activities included under subsidence-control measures of mine drainage treatment in 30 CFR 801.16;" the State has no such analog. As a result, the Secretary finds these State regulations less comprehensive, and conditions his approval on the State remedying this deficiency.

(iv) The federal regulation (30 CFR 801.13(a)) provides that, "The period of liability for every bond covering a long-term operation * * *" shall begin with issuance of a permit and continue until all reclamation, restoration and abatement work have been completed and the bond is released in accordance with Part 807 or replaced in accordance with Paragraph (b) of this section." The State in SR 14-16(a) limits the bond to the original permit term. However, there would be no bond coverage if the permit expired before reclamation had been successfully completed. Therefore, the Secretary conditions his approval on the State clarifying the period of liability in a manner consistent with the federal rule.

(v) The federal regulation 30 CFR 801.13(b) provides that continuous bond coverage will be provided and that the bond coverage will "* * * cover the initial term of the bond, and be conditioned to extend, replace, or pay the full amount of the bond 120 days prior to the expiration of any bond term, which in no case shall be less than 5 years. Failure to extend or replace bond coverage not less than 120 days prior to expiration shall subject the bond to conditions of forfeiture under Part 808." The State regulation SR 14-16(b) does not include these provisions. The Secretary finds that the State requirement must be clarified and conditions his approval on the State providing such clarification.

(vi) 30 CFR 801.16(a) references the applicability of 30 CFR 784.20, 817.121, and 817.126; provides for inclusion of the estimated cost of such measures; provides that liability shall extend to performance of the construction, site preparation, and relocations approved under 30 CFR 784.20; provides for bond release for construction of control measures only after final inspection, acceptance, and approval by the regulatory authority; and provides that inspections of the construction of surface control measures shall be coordinated with the surface owner, if possible, or considered waived if the surface owner denies reasonable access consistent with 30 CFR 801.16(a). The State regulation SR 14-19(a) does not include these provisions and the Secretary finds that the State regulation is less stringent than the federal regulation because it does not provide as much surety protection. The Secretary conditions his approval on the State appropriately amending its program.

(vii) The federal regulation 30 CFR 801.16(b) provides that, "bond coverage for any subsequent revegetation on that area previously used as an impoundment shall be subject to liability and release of 30 CFR 805.13, 807.11, and 807.12." State regulation SR 14-19(b) does not include this provision. In addition, the federal regulation provides "The estimated bond amount estimated under 30 CFR 805.11 *need* not include * * * drainage." The State regulation provides that the estimated bond amount *shall* not include * * * drainage." The Secretary finds that in the first case, the State analog is less stringent and, in the second case, does not allow the State to cover continuous treatment, monitoring, or potential unpredictable expenses as a result of mine drainage in any instance, even if these should prove to be a problem. Therefore, the Secretary conditions his approval on the State curing these deficiencies.

(viii) 30 CFR 805.13(b), provides for beginning the liability period *after* the last year of augmentation consistent with Section 515(b)(20) of SMCRA and provides for a demonstration by the permittee that discontinuing husbandry practices will not reduce the probability of permanent revegetation success. State regulation SR 15-13(b) provides for beginning the liability period *with* the last year of augmentation and does not include the second provision. The Secretary finds that "with" could be construed to mean that the liability period could begin before augmentation is completed, which is less stringent than federal requirements. In addition, the State's omission relieves the State of any responsibility for approving husbandry practices without regard for whether or not cessation would reduce the probability of permanent revegetation success, which is also less stringent than federal requirements. The State regulation SR 15-13(b) also omits the phrase "or other work in order to assure compliance" found in Section 515(b)(20) of SMCRA. This omission makes the State rule less stringent than the corresponding federal requirement by limiting the conditions which would initiate or cause the liability period to begin again. Therefore, the Secretary conditions his approval on the State amending its regulation to reflect 30 CFR 805.13(b).

(ix) 30 CFR 805.13(e), SR 15-13(e) the federal regulation allows no exception to the liability period of 5 or 10 years for long term, intensive agricultural land-use. The State regulation provides an exception. The Secretary finds that this exception is unacceptable because neither SMCRA nor the federal regulations allow an exception to the liability period. The exception authorized in Section 515(b)(20) of SMCRA relates to the kind of postmining vegetation, not the period of liability. Therefore, the Secretary conditions his approval on the State clarifying its regulations to reflect 30 CFR 805.13(e).

(x) 30 CFR 805.13(g), SR 15-13 the federal regulation provides that if an area is separated "* * * that portion shall be bonded separately and the applicable period of liability * * * shall commence anew, the period of liability for the remaining area shall continue in effect without extension, and the amount of bond on the original bonded area may be adjusted in accordance with 30 CFR 805.14." The States omit this language from SR 15-13. The Secretary finds that the State's omission is unacceptable because the State provisions do not make it clear that liability begins again on separated areas. The Secretary conditions his approval on the State curing this deficiency.

(xi) While the federal rules provide notification on bond actions to, and allow requests for reduction of bonds from, persons who have a financial interest in a bond other than the permittee the New Mexico rules only provide this for the permittee. The Secretary finds the New Mexico provision to be no less stringent than the federal rule, since environmental

protection and public participation will not be compromised by this difference.

(xii) 30 CFR 806.12(g)(2), SR 16-12(g)(2) the federal regulation provides that, "The regulatory authority may approve the *use* of letters of credit * * * in accordance with a schedule approved with the permit. Any bank issuing a letter of credit * * * shall notify the regulatory authority in writing at least 90 days prior to the maturity date of such letter of credit or the expiration of the letter of credit agreement." The State regulation provides for irrevocable letters of credit and allows approval of the withdrawal (rather than use) of a letter of credit only 90 days after notice to the regulatory authority. The Secretary finds the State's regulation consistent with the federal rules, because the regulatory authority will have the notice it needs before the letter of credit must be replaced.

(xiii) 30 CFR 806.12(h)(2)(ii), SR 16-12(h)(2)(ii) the federal regulation provides that the fair market value of real and personal property will be determined by at least two independent appraisers certified in the State and that "... final acceptance of the value of property for bonding purposes shall be subject to regulatory authority determination and shall be based on findings by appointed appraisers when deemed necessary." The State regulation provides that for an appraisal conducted by appraisers appointed by the Director in every case, which is consistent with the federal rule.

(xiv) 30 CFR 806.12(h)(2)(iii)(A), SR 16-12(h)(2)(iii)(A) the federal regulation provides that the status report will be prepared by a "* * * non-affiliated attorney competent to evaluate the asset * * *." The State regulation provides that the report be prepared by an attorney who is satisfactory to the Director as disinterested and competent. The Secretary finds that the State's regulation is acceptable because it assures the neutrality of the person making the report. The Secretary notes that the federal regulation was changed from the version incorporated in the State rule because commenters felt regulatory authorities should not be required by federal rules to pass judgment on the competency of an attorney who has passed a State's bar.

(xv) 30 CFR 806.12(h)(4)(vi), provides that the estimated bond value of all collateral posted as bond assurance under 30 CFR 806.12 (f), (g), and (h) shall be subject to a margin—bond value to market value ratio—determined by the regulatory authority. The margin shall reflect legal and liquidation fees, as well as value depreciation, marketability, and fluctuations which might affect the net cash available to the regulatory authority in performing reclamation. The bond value of collateral may be evaluated at any time, but shall be evaluated as part of permit renewal. In no case shall the bond value exceed the market value. State rule SR 16-12(h) does not include this provision. However, the Secretary finds that the State's omission is no less stringent than federal requirements because the State may not accept any securities other than U.S. Government securities and general revenue bonds of the State of New Mexico.

(xvi) Federal regulations on self-bonding are covered in 30 CFR 806.14. The State rule SR 16-14 incorporated proposed amendments issued January 24, 1980 (45 FR 6028), which were subsequently rejected due to comments which cited the proposed rules as providing inadequate financial assurances and economic incentives. OSM as an interim measure to further rulemaking repromulgated self-bonding regulations identical to regulations which were in effect when the State program was submitted. Therefore, the Secretary conditions this approval on reestablishing self-bonding rules as issued March 13, 1979 (44 FR 15387) 30 CFR 806.11(b) or August 6, 1980 (45 FR 52321) 30 CFR 806.14. Major deficiencies identified in the State regulations and corresponding federal requirements are discussed below.

30 CFR 806.14(a)(2), provides that the applicant or parent organization must have a net worth of at least six times the total amount of self-bond obligations on all U.S. permits. The State omits this requirement in SR 16-14(a)(2). The State regulation would allow a company to self-bond that has a net worth less than that required by the federal regulations.

Federal regulation 30 CFR 806.14(a)(3) provides that, "The applicant grants the regulatory authority a mortgage or security interest in real or personal property located in the State which shall have a fair market value equal to or greater than the obligation created under the indemnity agreement." The State rule SR 16-14(a) omits this provision.

In addition, 30 CFR 806.14(a)(4) provides that the regulatory authority can attach, sell, or otherwise dispose of real or personal property offered to secure a self-bond and that the regulatory authority will be the sole secured creditor in cases of bankruptcy. Other criteria must also be included, such as a schedule of the real or personal property. The State rule omits this provision. The omission of security rules would allow a self-bond that was unsecured and therefore, allow for the possibility of no funds or collateral being available for the regulatory authority to use to reclaim the land if the company forfeits or goes bankrupt.

30 CFR 806.14(a)(5)(v)(A) (1) and (2) provide for financial information for the *preceding* 10 year period. SR 16-14(a)(2)(v)(A) (1) and (2) provide for the information for any 10 years. The State regulations would allow the showing of information for a 10 year period which may not include the preceding 10 years, which would be the most reliable indication of relevant financial condition.

30 CFR 806.14(a)(5)(v)(D) provides for "A final determination by an independent certified public accountant regarding the operator's ability to satisfactorily meet all obligations and costs under the proposed reclamation plan for the life of the mine * * *" SR 16-14(a)(5)(v)(D) provides for "A final certification by the independent Certified Public Account that the financial statements as audited have been prepared in accordance with generally accepted accounting principles, with such disclosures that such Certified Public Accountant should make to comply with the Financial Accounting Standards Board." The State regulation is unacceptable because it does not require a determination of the operator's ability to meet all obligations and costs.

30 CFR 806.14(a)(6)(i)(D), provides for execution of the indemnity agreement by the applicant's spouse. SR 16-14(a)(3)(i)(D) provides for execution by the applicant's spouse "* * * if directly involved as part of the business on a regular bona fide basis or as an officer of the organization." The State regulation is unacceptable because it allows for execution by the operator's spouse only if the spouse is involved as part of the business, contrary to federal requirements.

Federal regulation 30 CFR 806.14(a)(6)(iii) provides that, "The indemnity agreement shall be a binding obligation, jointly and severally on all who execute it." State regulation SR 16-14(a)(3)(iii) provides the same but qualified it with "* * * other than corporate officer executing the indemnity agreement of signatories signing in their representative capacities and not as principals, unless the Director determines that the applicant does not qualify for a self-bonding without such joint and several liability." The State regulation provides an exception that the federal regulation does not.

(xvii) Federal regulation 30 CFR 807.12(c) provides that, "No increment shall be totally released from the permit

area until conditions of phase III reclamation for the last increment of the permit area have been met." State regulation SR 17-12(c) allows for an increment to be released from the permit area if successful reclamation of the increment is not dependent on other increments. The Secretary finds the alternative language of the State regulation acceptable because it achieves the intent of the corresponding federal rule and restricts release on increments on which achievement of the land use is dependent. It should be noted, however, that the increment is released from the permit area only through repermitting or permit amendment.

(xviii) Federal regulation 30 CFR 808.12(d) provides that, "The regulatory authority shall utilize funds collected from bond forefeiture to complete the reclamation plan on the permit area on which bond coverage applies, and to cover associated administrative expense." The State has no such analog in rule SR 18-12. The Secretary finds that the State's omission is acceptable because the federal rule was promulgated on August 6, 1980 and the State is not required to include it in its program at this time. The State will be given an opportunity to incorporate the provision at a later date.

(i) The New Mexico Division of Mining and Minerals has the authority under Sections 69-25-22 of the NMSMA, and the New Mexico program includes provisions to provide for civil and criminal sanctions for violation of New Mexico law, regulations, conditions of permits and exploration approvals including civil and criminal penalties in accordance with Section 518 of SMCRA, 30 USC 1268. The approval contained in 30 CFR 931.10 is based upon the following representations of New Mexico law:

(i) New Mexico statutes 69-25A-22E and 69-25A-22G, governing willful violations, has added language not contained in section 518 (e), (f), and (g) of SMCRA, which state that a willful violator is subject to the imposition of certain criminal penalties only if "the time for appeal has exhausted." The Secretary requested that the State submit an Attorney General's Opinion confirming the equivalency of the State and federal provisions. This Opinion was submitted to the Office of Surface Mining on August 7, 1980 (See Administrative Record No. NM 99). New Mexico pointed out that Section 518(c) of SMCRA uses the term "final decision," making it clear that all appeal rights of the individual must run prior to the imposition of criminal penalties. The Secretary agrees with this analysis, and finds the New Mexico provision to be consistent with SMCRA Sections 518 (e), (f), and (g).

(ii) NMSA 69-25A-22H adds language not present in Section 518(h) of SMCRA, regarding relief from the $750 per day failure-to-abate penalty. The Secretary requested that New Mexico submit an Attorney General's Opinion explaining the equivalency of the State language. On August 7, 1980, New Mexico submitted the requested Opinion fully explaining the New Mexico appeals process (See Administrative Record No. NM 99). The process includes two levels of administrative appeal prior to judicial appeal, but there is no relief from the failure-to-abate penalty which is consistent with Section 518(h) of SMCRA. On this basis, the Secretary finds NMSA 69-25A-22H to be consistent with SMCRA Section 518(h).

(iii) The New Mexico regulations provide for a civil penalty point system which, in some aspects, is different from that found in 30 CFR Part 845. First, in the New Mexico System, for each category of the penalty criteria, the Director may assign up to 25 points. In 30 CFR 845.13, up to 30 points may be assigned for history of violations and seriousness, and only up to 10 points may be credited for good faith.

Secondly, Section 31-13(b)(1)(iii) of the New Mexico regulations states that, for purposes of assigning history points, "a violation not resulting in a civil penalty assessment shall not receive more than 50 percent of the points that would have been assigned if the violation had resulted in an assessment." The State scheme of point assignment should result in penalties which, in a number of cases, are lower than those that would be assessed under the federal provisions.

On May 16, 1980, the U.S. District Court for the District of Columbia issued its second round decision in the litigation over the permanent regulations *(In Re: Permanent Surface Mining Regulation Litigation)*. In that decision, the District Court answered the Secretary's request for clarification regarding the Round I decision issued February 26, 1980, regarding penalties. In those decisions, the Court indicated that while Section 518(i) of the Act requires a State to incorporate the penalties, the four criteria, and the procedures explained in Section 518, the Secretary does not have the authority to require States to adopt a system that will result in penalties at least as stringent as those imposed under OSM's point system. Based on the district court's ruling, the Secretary has affirmatively disapproved the New Mexico civil penalty assessment procedures to the extent they incorporate provisions remanded by the court.

(iv) New Mexico regulation 31-15(b) incorporates language limiting the extent to which daily failure-to-abate penalties can accumulate, which was proposed by the Secretary as a rule change to 30 CFR 845.15(b). In the final rule, published on September 4, 1980 (45 FR 58780), the Secretary placed additional requirements upon the regulatory authority. By means of a policy statement, dated September 10, 1980, New Mexico included these additional requirements. Although not specifically included the Secretary assumes that the State will use its powers under NMSA 69-25A-22F to subject directors, officers, or agents, of corporate permittees to civil and criminal penalties in appropriate failure-to-abate cases. (See Administrative Record No. NM 119). On this basis, the Secretary finds regulation 31-15(b) acceptable.

(v) New Mexico regulation 31-17(d) allows the consolidation of an assessment conference and an informal hearing for the review of a violation if the Director determines that such consolidation is appropriate. The Secretary finds that this approach is consistent with the intent of SMCRA and 30 CFR 845.18 and 845.19, because it is only done when appropriate, and in a manner which does not prejudice the rights of operators or citizens.

(j) The New Mexico Division of Mining and Minerals has the authority under New Mexico laws, and the New Mexico program contains provisions, to issue, modify, terminate and enforce notices of violation, cessation orders and show-cause orders in accordance with Section 521 of SMCRA, 30 USC 1271, and with 30 CFR Chapter VII, Subchapter L, including the same or similar procedural requirements. The enforcement authorities in Section 521 of SMCRA and the applicable provisions of 30 CFR Chapter VII, Subchapter L are contained in Section 25 of the New Mexico NMSMA and in Sections 30 and 31 of the New Mexico regulations. Approval of the New Mexico regulatory program is based upon the following representations:

(i) 30 CFR 843.13 (c)(1)-(3) and (d) place certain burdens upon the regulatory authority to publish and post copies of any show cause order to be certain that the public is fully informed. New Mexico regulation 30-13, which covers show cause orders does not include these requirements. In order to fully comply with Section 521 of SMCRA and the above federal regulations, New

Mexico must publish notice of any show cause order and post that order in the regulatory authority office. New Mexico has agreed to make this change.

(ii) The New Mexico statute 69–25A–25 uses the term "designee" in instances where SMCRA Section 521(a) uses "authorized representative." The State was requested to submit an Attorney General's Opinion explaining the equivalency of the terms (See Administrative Record No. 58). On August 7, 1980, the State submitted the requested opinion and explained that it considers the two terms to be equivalent. On that basis the Secretary finds that NMSA 69–25A–25 and SMCRA Section 521(a) are consistent.

(iii) New Mexico regulation 30–11(b) includes language not found in the federal counterpart, 30 CFR 843–11(b), which states, "if affirmative obligations to abate are imposed, the inspector may consider suggestions by the operator concerning the economic and technical feasiblity, in determining the most expeditious means of abatement and the period for the correction of the condition, practice of violation * * *" At the September 5, 1980, meeting (See Administrative Record No. NM 110), New Mexico represented that it intended regulation 30–11(b) to operate in the same manner as 30 CFR 843.11(b). Thus, this language means that if an operator knows of a less expensive and more effective method of abatement, he may so inform the inspector. If the inspector believes the suggested method would assure that the imminent danger will be abated as promptly as possible he should modify his order (See 44FR 15301). On this basis, the Secretary finds New Mexico regulation 30–11(b) consistent with 30 CFR 843.11(b).

(iv) New Mexico regulation 30–13(b)(2) includes different language from the federal counterpart, 30 CFR 843.13. The State language states that all violations associated with any surface coal mining operation shall be attributable to the permittee "unless the permittee establishes by clear and convincing evidence, that the acts were not within the scope of employment or agency." The federal language states that such acts are attributable "unless the permittee establishes that they were acts of deliberate sabotage." At the September 5, 1980, meeting, New Mexico represented that it would not proceed to suspend or revoke an operator's permit if the acts complained of were beyond the "scope of employment," and that this standard was no different than the Director's discretion not to suspend or revoke a permit under 30 CFR 843.13(b) (See Administrative Record No. NM 110). Further, in a letter, dated September 10, 1980, from Emery C. Arnold to Walter N. Heine, the State indicated that the phrase, "scope of employmnent," covers acts incidental to the regular duties of an employee (See Administrative Record No. NM 119). Additionally, *Lang* v. *Cruz*, 394 p. 2d 988 (N. Mex. Sup. Ct. 1964), indicates that any act of an employee in furtherance of the employer's business is within the employee's scope of employment even if such act is in violation of the employer's orders. The Secretary understands that all actions of an employee in connection with the mine are included in the scope of employment, and thus the New Mexico concept is as inclusive as the federal regulation. The Secretary, therefore, finds that the procedures used in New Mexico regulation 30–13(b)(2) are the same or similar to those procedures in 30 CFR 843.13.

(v) 30 CFR 843.13 prescribes events that are triggered by a permit suspension or a permit revocation. The New Mexico counterpart, regulation 30–13, does not refer to permit suspension. The Secretary requested an explanation (See Administrative Record number NM 58). The State responded that the obligation upon an operator to reclaim exists independently from the language in 30 CFR 843.13 and that such obligation is not terminated by the suspension or revocation of a permit. The State can assert the right both to require reclamation after suspension or revocation and to proceed against a bond should reclamation activity not be completed (See Administrative Record number 89). The Secretary finds that explanation consistent with 30 CFR 843.13.

(vi) The State program does not include the language found in 30 CFR 843.18, which states that no notice of violation shall be vacated because of inability to comply. The State explained that an operator with an outstanding notice of violation who fails to comply is given an automatic cessation order under 30–12(e) which replaces the notice of violation. Therefore, a notice of violation and cessation order are analytically equivalent with respect to inability to comply (See Administrative Record Number NM 89). The Secretary agrees that an equivalent result does occur, and he finds the New Mexico approach is similar to the federal regulation.

(vii) The Secretary was unclear as to the operation of New Mexico regulation 30–15, concerning informal hearings, in the areas of public participation, the relationship to the formal hearing process, and the consideration of civil penalty criteria. In a letter from Emery C. Arnold to Walter N. Heine, dated September 10, 1980, the State indicated that the public would be given notice of and would be allowed to participate in these informal hearings pursuant to the New Mexico Open Meetings Act, NMSA 10–15–1 *et seq.* Secondly, the State indicated that if a penalty is arrived at during such an informal hearing, the requirements of part 31 of the regulations must be complied with, including consideration of the four civil penalty criteria with, including consideration of the four civil penalty criteria which are consistent with SMCRA Section 518(a). Lastly, the State indicated that the informal hearing procedure does not preclude an operator from asserting his right to formal review by the Director. Based on these representations, the Secretary finds New Mexico regulation 30–15 acceptable.

(k) The New Mexico Division of Mining and Minerals has the authority under Section 69–25A–26 of the NMSMA, and the New Mexico program contains provisions to designate areas as unsuitable for the surface coal mining consistent with 30 CFR Chapter VII, Subchapter F. Approval of the New Mexico program is based upon the following considerations and representations:

(i) New Mexico was asked by the Secretary to explain why regulation 4–15 did not contain the requirements of 30 CFR 764.15 for publishing public notice in a State register and the maintenance of an administrative record at a local office in the area of concern (See Administrative Record No. NM 58). The State responded that New Mexico has no State register and the only regulatory authority office is located in Santa Fe (See Administrative Record No. NM 89). The administrative record for any proceeding will be kept in the regulatory authority office in Santa Fe. The Secretary finds that this is consistent with the requirements of Section 522(a) of SMCRA and 30 CFR 764.15.

(ii) New Mexico regulation 4–17 specifies that the hearing connected with any petition be adjudicatory and not simply fact-finding in nature. The Secretary was concerned that this type of a hearing conflicted with the clear directive in 30 CFR 764.17 that the hearing be "legislative and fact-finding in nature, without cross-examination of witnessses."

New Mexico was asked by the Secretary to clarify the reasons for making this change (See Administrative Record No. NM 58). The State responded that the "adjudicatory" hearing has a well-developed tradition in New Mexico

regulatory agencies. Upon close examination, it became clear that the New Mexico type of proceeding was not an "adjudicatory" hearing in the traditional sense, but is a hybrid, which allows the witness to select the procedures which will apply to his or her testimony.

New Mexico's position on this type of hearing was supported to some degree, by representatives of the environmental community in the State. At the public hearing of July 23, 1980, representatives of the Sierra Club and the New Mexico Citizens for Clean Air and Water described a process which has developed over the years at hearings conducted by the Environmental Improvement Board in New Mexico (See Administrative Record No. NM 79). Apparently, this process is not codified, but carried on by tradition. The Board recognizes two distinct types of witnesses, one termed a "technical" witness and the other termed an "opinion" witness. Prior to testifying a witness declares himself to be in one category or the other. The "technical" witness is subject to cross-examination while the "opinion" witness is not. Both types of testimony are fully considered by the Board.

A "technical" witness is not to be confused with the legal term of art, expert witness. The "technical" witness category includes industry representatives, representatives of organized environmental groups, and others who wish to present evidence that has some scientific basis. Any person with evidence of a scientific nature who does not wish to be subject to cross examination, can submit the evidence in written form to the regulatory authority or indicate prior to testimony that he or she is an "opinion" witness. A witness in this category is subject to cross-examination by the members of the Board and by others attending the hearing. The environmental representatives endorsed this type of hearing as the type of thing which they would like to see develop with the New Mexico Surface Mining Commission. They cautioned against full acceptance, however, until some sort of tradition had developed.

The Secretary requested that New Mexico provide written procedures detailing how the adjudicatory hearing will operate both in spirit and in practice for evaluation (See Administrative Record No. NM 110). The Mining and Minerals Division and the Surface Mining Commission in its letter, dated September 10, 1980, committed to establishing hearing procedures which include the following features: (1) compliance with notice, record-keeping, venue, and other requirements of 4-15 and 4-17(2) the creation of 2 categories of witnesses—technical who will be subject to cross-examination, and non-technical who will be subject to cross-examination only if they so affirm, (3) in applicability of the civil rules of procedure and rules of evidence, and (4) a notice of hearing which will announce the procedures to be followed in conducting such hearings (Administrative Record No. NM 119). The Secretary finds the procedures in New Mexico regulation 4-17 inconsistent with the provisions of 30 CFR 764.17 and conditions approval of the State program upon this deficiency being remedied. The Secretary agrees to examine the alternative approach outlined by the State when implementing procedures and regulations have been developed to determine if the approach can be found to be consistent with 30 CFR 764.17. The process may be consistent with federal requirements since any person can elect that the hearing, as it involves his or her testimony, be strictly legislative in nature and thus the New Mexico procedure would not have a chilling effect on the designation petition process. During this evaluation public comment on the approach will be sought.

(1) The New Mexico Division of Mining and Minerals has the authority under 69-25A-17, and the New Mexico program contains the provisions for public participation in the development and revision of New Mexico regulations, and the State program, consistent with the public participation requirements of SMCRA and 30 CFR Chapter VII. New Mexico also has the authority to provide for public participation in the permitting process and in the enforcement of its laws and regulations.

The New Mexico program was developed by a task force comprised of representatives of industry, the Division of Mining and Minerals, and other State agencies. Environmental group representatives were invited to participate, and were presented with materials to critique as they became available. A public hearing was held on May 15, 1980, in conjunction with the promulgation of the regulations.

Approval of the New Mexico program is based upon the following considerations and representations:

(i) Section 520(b)(2) of SMCRA states that an action cannot be commenced against the regulatory authority on an immediate basis unless the case constitutes an imminent threat to the health or safety of the plaintiff or would immediately "affect a legal interest" of the plaintiff. New Mexico has substituted the language "irreversibly impair a legal interest" in 69-25A-24B. In response to the Secretary's request for information clarifying the differences in language, the State submitted an Attorney General's Opinion on August 7, 1980, indicating that New Mexico law provides an equivalent standard (see Administrative Record No. NM 99). In that opinion, the Attorney General states that the failure of a state official to perform a mandatory non-discretionary duty would constitute the kind of irreversible impairment of a legal interest required in Section 24B. On this basis, the Secretary finds the explanation acceptable.

(ii) Section 520(c) of SMCRA requires that suits against the regulatory authority be brought only in the judicial district in which the operation is located. NMSA 69-25A-24C requires that such suits be brought in the district court of Santa Fe. The Secretary requested a demonstration of equivalency (see Administrative Record No. 58). The State responded that, as it applies to New Mexico, the federal requirement means that a suit under SMCRA could be brought anywhere in New Mexico since the entire State constitutes a federal judicial district (see Administrative Record No. NM 89).

The State also pointed out that New Mexico statutes require that suits against State officers shall be brought in the capital and nowhere else. The requirement in the NMSMA restates this general venue requirement. The Secretary accepts the explanation as a demonstration of equivalency, and finds NMSA 69-25A-24C consistent with Section 520(c) of SMCRA.

(iii) In the original submission of February 28, 1980, New Mexico did not provide a counterpart to 43 CFR Part 4. In the submission to OSM of June 11, 1980, most of the necessary provisions were either added to the regulations, or the appropriate equivalent in other State law was referenced (see Administrative Record No. NM 89). New Mexico did not include a showing of authority for the awarding of attorney's fees consistent with 43 CFR 4.1290-96. As a condition of approval, New Mexico must either implement regulations similar to these, or reference appropriate State law already in effect.

(iv) Section 520(a) of SMCRA specifies that actions may be brought against the United States and against the Secretary. The New Mexico counterpart, 69-25A-24A NMSA 1978, allows actions to be brought against the Commission, but makes no mention of actions against the State of New Mexico. The Secretary requested that the State submit an

Attorney General's Opinion explaining the equivalency of the State statute and the federal provision. On August 7, 1980, the State submitted an Opinion to the Secretary (see Administrative Record No. NM 99), which explains that a suit against the Commission in its official capacity is, in effect, a suit against the State. The Secretary, therefore, finds the New Mexico provision consistent with Section 520(a) of SMCRA.

(v) The Secretary points out that New Mexico regulation 29-12(b) concerning citizen request for inspections, contains an apparent typographical error. In order to read correctly, the entire provision should probably be written as a single sentence. As it stands, it is an incomplete thought. As a condition of approval, New Mexico must promulgate a regulation consistent with 30 CFR 842.12.

(vi) New Mexico regulation 29-16 refers to State statutes which govern the inspection of public records. The Secretary requested that New Mexico provide Sections 14-2-1 through 14-2-3 NMSA 1978, which were not a part of the original submission. New Mexico complied with this request on June 11, 1980 (see Administrative Record No. NM 63). Subsequent review allows the Secretary to find that the provisions are consistent with 30 CFR 842.16.

(m) The New Mexico Division of Mining and Minerals has the authority under New Mexico laws and the New Mexico program includes provisions to monitor, review, and enforce the prohibition against indirect or direct financial interests in coal mining operations by employees of the New Mexico Energy and Minerals Department, Division of Mining and Minerals and the New Mexico Surface Mining Commission consistent with 30 CFR 705.

(n) The New Mexico Division of Mining and Minerals has the authority under New Mexico regulations to require the training, examination, and certification of persons engaged in or responsible for blasting and the use of explosives in accordance with Section 719 of SMCRA. New Mexico has no regulations on the training, examination, and certification of persons engaged in blasting because 30 CFR 732.15(b)(12) does not require a State to implement regulations governing certification and training of persons engaged in blasting until six months after federal regulations for these provisions have been promulgated. Federal regulations have not been promulgated at this time.

(o) The New Mexico Division of Mining and Minerals has the authority under 69-25A-10C NMSA 1978 to provide small operator assistance. New Mexico has not promulgated any regulations at this point. In October of 1979 New Mexico and the Office of Surface Mining entered into a Memorandum of Understanding which specified the arrangement contemplated by 30 CFR 795.11 (a)(3)(ii) under which OSM would implement the SOAP program for New Mexico. The State had initially requested OSM to assume this responsibility in a letter dated May 18, 1979. The state has adopted this approach because historical experience indicated that very few applications would be forthcoming. This projection has been borne out by the fact that only one application has been filed during the period of the initial Memorandum of Understanding. More explicitly, only one application has been filed since the inception of the program in March 1978. There are no indications that the structure of the coal industry in New Mexico is going to change and alter this present experience with respect to the need for SOAP. New Mexico sent an additional letter, dated June 10, 1980, requesting that the Memorandum of Understanding be renewed and extended for an additional year.

New Mexico does not feel that it would prove cost effective to implement a SOAP program within the Division of Mining and Minerals. In testimony presented at the July 23, 1980, public hearing, the State estimated that the costs of maintaining a staff so that a program could be implemented, apart from the costs involved in processing an application, to be in excess of $50,000 annually (see Administrative Record No. NM 79, p. 37). This figure did not contain any cost figures for retainer payments to insure that suitable laboratory facilities and personnel would be available when needed. The estimated cost of laboratory work for the only application so far submitted is placed at $30,000. Assuming the same number and frequency of SOAP applications will occur in the future, one every two years, New Mexico would incur $100,000 of fixed costs for each $30,000 laboratory contract. New Mexico argues that this is not an effective use of public funds. The State has agreed that, if due to unanticipated and unexperienced developments, the number of small operators in the State increases significantly, the State will implement its statutory authority for a State SOAP. The Secretary is sympathetic to the argument of cost effectiveness, but at the same time realizes the responsibilities imposed by SMCRA. As a condition of approval, new Mexico must promulgate regulations consistent with 30 CFR Part 795. The Secretary will not impose any demands for additional staffing unless increases in the number of small operators in the State dictate the need for establishment of a permanent SOAP staff. To the extent possible, consistent with funding and staffing limitations, OSM will provide assistance to the State necessary to process SOAP applications during this transition period utilizing the procedures and following regulations developed by the State. New Mexico has agreed to this condition.

(p) The New Mexico Division of Mining and Minerals does not have the authority under 69-25A-22(E)NMSA 1978, and the New Mexico program does not contain provisions to provide protection of employees of the Division of Mining and Minerals in accordance with the protection afforded federal employees under Section 704 of SMCRA.

New Mexico has provided a written commitment to make, as an explicit condition of permit approval, the requirement that permittees not willfully resist, prevent, impede, or interfere with the Director (or by definition his authorized representatives) from performing his duties under the Surface Mining Act (see Administrative Record No. NM 99). By making this a permit condition, the penalty provisions of Section 69-25A-22(E) will become applicable, and an operator interfering with an inspector will become liable for a fine of $10,000 or imprisonment for not more than a year or both. Based on this representation, the Secretary approves New Mexico provisions for protection of State employees.

(q) New Mexico has the authority under its laws and the New Mexico program contains provisions for administrative and judicial review of State program actions in accordance with Sections 525 and 526 of SMCRA and 30 CFR Chapter VII, Subchapter L. The approval is based upon the following representations concerning New Mexico law and the New Mexico program:

(i) The Secretary was concerned that NMSA 69-25A-30A appears to allow for interlocutory temporary relief, contrary to the language of SMCRA Section 526(c). The Secretary requested an Attorney General's Opinion demonstrating the equivalency of the provisions. New Mexico responded on August 7, 1980, with an opinion that pointed out that the criteria for temporary relief in the New Mexico program were located in NMSA 69-25A-30B, and that they were the same as the federal criteria in SMCRA Section 526(c) (See Administrative Record No. NM 99). On this basis, the Secretary finds NMSA

69-25A-30A and 30B consistent with SMCRA Section 526(c).

(ii) NMSA 69-25A-29G appears to allow for a *de novo* review in the case of administrative review. SMCRA Section 525(a)(2) clearly states that such review must be "on the record." The Secretary requested that New Mexico submit an Attorney General's Opinion concerning the equivalency of the State and federal provisions (see Administrative Record No. NM 58). On August 7, 1980, the State submitted such an opinion, which indicates that the administrative hearing before the Director is the stage at which the administrative record is developed. The Commission may only order that additional evidence be taken by the Director. The Secretary finds the New Mexico procedure acceptable.

(iii) NMSA 69-25A-30B appears to allow for a *de novo* review in the case of judicial review. SMCRA Section 526(b) clearly states that such review must be "on the record." The Secretary, requested that New Mexico submit an Attorney General's Opinion concerning the equivalence of the State and federal provisions (see Administrative Record No. NM 58). On August 7, 1980, the State submitted such an opinion, which indicates that a judge may not take additional evidence except in cases of alleged omissions or errors in the record. The types of corrections contemplated are errors in the transcript. It is not a method for introducing new material. On this basis, the Secretary finds that NMSA 69-25A-30B meets the requirements of Section 526(b) of SMCRA, as interpreted by the Secretary in his pleadings before the U.S. District Court for the District Court of Columbia, during round one of the permanent program litigation.

(iv) NMSA 69-25A-30C includes language not present in the federal counterpart, SMCRA Section 526(b), which appears to limit access to court. The language in question states that a court may affirm, remand, or reverse the decision of the Commission "if the substantial rights of the petitioner have been prejudiced because of the administrative findings." The Secretary requested that New Mexico submit an Attorney General's Opinion concerning the equivalence of the State and federal provisions (see Administrative Record No. NM 58). On August 7, 1980, the State submitted such an opinion. New Mexico explained that the reviewers had misconstrued the purpose of the State statutory language. The State explained that the language establishes a general standard of review for the district court to apply to the review of Commission decisions, not a standing requirement which would limit court access. On this basis, the Secretary finds NMSA 69-25A-30C consistent with the requirements of Section 526(b) of SMCRA.

(v) Section 526(d) of SMCRA has no counterpart in New Mexico law. This section states that the commencement of a proceeding shall not operate as a stay of an action, order, or decision of the Secretary's unless specifically ordered by the court. In response to the Secretary's request for assurance that New Mexico State law operates in an equivalent manner, the State submitted an Attorney General's Opinion on August 7, 1980 (see Administrative Record No. NM 99). The Opinion pointed to 69-25A-30B NMSA 1978, as the equivalent in terms of the criteria which must be met prior to a court issuing a stay. On this basis, the Secretary finds NMSA 69-25A-30B consistent with Section 526(d) of SMCRA.

(vii) Section 526(a)(2) of SMCRA includes language stating that the availability of review established in this subsection shall be not construed to limit the operation of rights established in Section 520. The State has no comparable provision. The Secretary requested an explanation of equivalence (Administrative Record number 58). The State responded on August 7, 1980, with an Attorney General's opinion that satisfied the concern of the Secretary. The State explained that the right of judicial review established in NMSA 69-25A-30 is completely independent from the right to initiate suit under NMSA 69-25A-24. Nothing in the statute indicates that 69-25A-30 narrows the scope of action under 69-25A-24. On the strength of this opinion, the Secretary finds NMSA 69-25A-30 consistent with SMCRA Section 526(a)(2).

(r) The Division of Mining and Minerals has the authority under New Mexico law, and the New Mexico program contains provisions to cooperate and coordinate with and provide documents and other information to the Office of Surface Mining under the provisions of 30 CFR Chapter VII. The provisions for cooperation, coordination, and provision of documents are contained in 69-25-A-27 NMSA 1978.

(s) The following laws and regulations of New Mexico affecting its regulatory program, with the exception discussed below, do not contain provisions which would interfere with or preclude implementation of the provisions of SMCRA and 30 CFR Chapter VII: the New Mexico Surface Mining Act and regulations adopted thereunder; the New Mexico Mine Dewatering Act; the New Mexico Water Quality Act and regulations adopted thereunder; the New Mexico Air Act and regulations adopted thereunder; the New Mexico Habitat Protection Act; the New Mexico Cultural Properties Act; the New Mexico Confidentiality of Site Location Act; Section 19-9-1 NMSA—Lease of coal lands; Section 19-70-18 NMSA—Bond requirements; Section 30-8-2 NMSA—Polluting water; Section 76-8-1 NMSA—Protection of native New Mexico plants; Sections 60-3-6 and 69-3-6—ground water usage; Sections 72-5-1 *et seq.*—surface water appropriation; Section 72-8-1 *et seq.*—offenses and penalties regarding water; Section 72-12-1 *et seq.*—ground water usage; and other laws and regulations of New Mexico.

As discussed in Finding 4(d)(vi), New Mexico has an apparent conflict of requirements in the New Mexico Wildlife Conservation Act. That Act allows for the capture, removal, and destruction of endangered species. New Mexico has stated that the Endangered Species Act of 1973 preempts this State act, and New Mexico recognizes the complete protection afforded those species listed under the federal Act. The New Mexico Wildlife Conservation Act insofar as it conflicts with the Endangered Species Act of 1973 and is, therefore, inconsistent with SMCRA is being pre-empted and superseded in this approval.

(t) The New Mexico Division of Mining and Minerals and other agencies having a role in the program have sufficient legal, technical, and administrative personnel, and sufficient funds to implement, administer and enforce the provisions of the program, the requirements of 30 CFR 732.15(b) and other applicable State and federal laws. Approval is based upon the following representations made by New Mexico concerning New Mexico law and the New Mexico program:

(i) New Mexico's program narrative statement references legal services from the Attorney General's Office as being available through a joint powers agreement with the Mining and Minerals Division. New Mexico was requested to provide a copy of the agreement. The State did provide the requisite document (see Administrative Record No. NM 89), but since that submission the Mining and Minerals Division has employed its own full time attorney, separate from the Attorney General's Office. The attorney is a former Assistant Attorney General in New Mexico who has been involved in the entire process of State program development. The Secretary finds that this insures that the Division is provided adequate legal staffing.

(ii) New Mexico was requested to provide a description of the actual capital and operating budget for the prior fiscal year (FY 79–80) which was not included in the original submission. The request, made in accordance with 30 CFR 731.14(1), was answered satisfactorily, and the budget is part of the basis of this decision package (see Administrative Record No. NM 89).

(iii) New Mexico was asked to provide a more complete descriptive statement of the responsibilities for other programs specifically assigned to the Mining and Minerals Division. The original statement contained a broad listing of general programs, but did not include specific details of duties and responsibilities. New Mexico, in the submission of June 11, 1980, provided an appropriate response (see Administrative Record No. NM 89).

(iv) As discussed in Finding 4(o), the Secretary is conditioning this approval on the promulgation of New Mexico regulations consistent with 30 CFR Part 795, governing the small operator assistance program. The Secretary will not impose any demands for additional staffing unless increases in the number of small operators in the State dictate the need for establishment of a permanent SOAP staff.

E. Disposition of Public Comments

The comments received on the New Mexico program during the public comment periods further described under "Background on the New Mexico Program Submission" raised several issues. The Secretary considered these comments in evaluating New Mexico's program, as indicated below.

1. The United States Forest Service asked that the State emphasize in the narrative under 30 CFR 731.14(e) that contact be made with State Forestry personnel on any permit application evaluation which occurs in a forest type. The New Mexico submission of June 11, 1980, contains a new provision that states that stocking rates for any forest types will be in accordance with direction from the State Forestry Division. The Secretary believes that the State Forestry Division will be insured adequate involvement in the decision making process. The Secretary notes that as discussed in Finding 4(c)(x), the State Forester's standards in establishing the stocking do not yet fully meet minimum federal requirements.

2. The Forest Service and the New Mexico State Coordination and Administration Committee (NMSCAC) also contend that the memorandum of understanding between the Secretary of Energy and Minerals and the Secretary of Natural Resources, included in the narrative section as prescribed by 30 CFR 731.14(f), should be amended to adequately address established forest type vegetation as well as emphasize coordination on faunal aspects. In amending the proposed regulations, the Division of Mining and Minerals accorded full recognition to the Department of Natural Resources expertise with regard to forest types in Section 20–117. The Secretary feels that this change insures adequate involvement.

3. The Forest Service and the NMSCAC also expressed its belief that the New Mexico program, once approved, would apply to all operations in the State, including those that might involve federal lands managed by BLM and the Forest Service. The commenter expressed concern over the apparent lack of input available to the land management agencies. OSM will retain full authority for implementation of SMCRA on federal lands until such time as a cooperative agreement is implemented between OSM and New Mexico. A cooperative agreement, if implemented, will directly address the concerns of the Forest Service.

4. The Geological Survey expressed concern over the possibility of confusion arising in the State agency regarding the respective responsibilities of the various Department of Interior agencies under the coal management program. Again, the State of New Mexico will have no jurisdictional authority over federal lands, including federal coal, until such time as a cooperative agreement is implemented. If such an agreement is consummated, the Secretary expects it will fully incorporate the principles enunciated in the memorandum of understanding signed by the Office of Surface Mining, Geological Survey and the Bureau of Land Management.

5. The Soil Conservation Service (SCS) and the NMSCAC suggest that New Mexico's Section 3–11(3) in the regulations be made more specific regarding productivity of rangeland as it affects wildlife. The Secretary notes that the New Mexico provision in question exactly parallels the language of 30 CFR 762.11(b)(3). The standard for the evaluation of a State program is a determination that all provisions are at least as stringent as the federal counterpart. The Secretary believes that the New Mexico provision meets that standard.

6. The SCS and the NMSCAC maintain that New Mexico regulation 8–21(b) should make it a mandatory requirement for a permit applicant to contact Soil and Water Conservation Districts. The Secretary notes that the New Mexico provision mentions the contact with Soil and Water Conservation Districts while the federal counterpart, 30 CFR 779.21 does not. The Secretary believes that the New Mexico program is consistent with the SMCRA and the regulations promulgated thereunder.

7. The SCS and the NMSCAC also suggest that New Mexico regulation 8–15 include a control mechanism to insure that ground water is not substantially altered. The Secretary notes that this section refers only to the informational requirements which an operator must address in a specific permit application. The provisions dealing with the protection of the hydrologic balance are found elsewhere in the program in State regulations 20–41 through 20–59. The Secretary finds that those protections are consistent with SMCRA and 30 CFR Chapter VII.

8. SCS points out a typographical error in New Mexico regulation Section 8–19(a). *Plan* communities should be *plant* communities. New Mexico corrected this error in the Regulations prior to promulgation on May 15, 1980.

9. SCS and the NMSCAC suggest that New Mexico regulation 8–19(a)(6) should require as a benchmark, animal unit months (AUM's) the area is actually supporting, rather than AUM's which the area could support. The Secretary notes that in the New Mexico program both standards are mentioned in the alternative, anticipating the situation where the land in question is not being grazed prior to mining, but is available for grazing after mining. The Secretary believes that the provision is consistent with the federal standard in 30 CFR 779.19.

10. The SCS and the NMSCAC also contend that New Mexico regulation 20–115 should contain a provision insuring that grazing pressure be controlled during post-mining years to insure that plants are not weakened to the point where they are eliminated from the plant community if the operator chooses to demonstrate capability by actual grazing. The Secretary notes that the purpose of this section is to determine whether the land is capable of withstanding grazing pressure and is, therefore, eligible for bond release. The very purpose of the grazing test is to be certain that the event which the commenters fear will not occur after the bond has been released. Proper management will be employed, and the bond will not be released if the land in question cannot withstand the grazing pressure. The Secretary believes that the provision is consistent with 30 CFR 115. The Secretary notes further that the District Court remanded the federal regulations on the basis that it exceeded

the statutory authority of SMCRA. The State provision has provided an alternative to the court-perceived defect of actual demonstration.

11. The SCS and the NMSCAC contend that the standard employed by New Mexico in regulation 20-106(b) as a basis for waiving the requirements for stabilization and revegetation is inadequate. Rather than labeling an acceptable erosion rate as that of surrounding undisturbed lands, the SCS suggests that acceptable soil loss should be determined by a qualified soil scientist. The Secretary notes that in the submission of June 11, 1980, New Mexico added the concept that the surrounding lands must be under proper management to be used as a comparative standard (see Administrative Record No. 89, N.M. Reg. 20-106(B)). This serves as an acceptable standard consistent with § 816.106 of the federal regulations.

12. The SCS and the NMSCAC suggested an addition to the federal permanent regulatory program and, consequently an addition to the New Mexico permanent program, by means of regulation amendment. They proposed a new section outlining provisions whereby reclamation research and demonstration of reclamation technology sponsored by State or federal agencies may occur after a mining permit has been issued. The Secretary notes that Section 10-13 of the New Mexico regulations and 30 CFR 785.13 govern the issuance of permits for experimental practices in reclamation technology. These provisions provide the access that the commenters request. The approval authority of such practices is vested jointly in the Director of the Division of Mining and Minerals and the Director the Office of Surface Mining.

13. The Environmental Protection Agency (EPA) expressed concern that Section 8 of the New Mexico Surface Mining Act contains language which may interfere with federal requirements. The language in question states, "* * * that nothing in the New Mexico Surface Mining Act shall be construed to supersede the authority which any state department or agency has with respect to the management, protection and utilization of the state lands and resources under its jurisdiction." The Secretary has identified only one State law which potentially conflicts with federal requirements. That law, the New Mexico Wildlife Conservation Act, has been set aside by the Secretary in his approval to the extent that it conflicts with the Endangered Species Act of 1973. With regard to other federal requirements, the Secretary is satisfied that no conflicts exist.

14. EPA also suggests that the Department of Interior carefully evaluate the apparent differences in the State regulations concerning "Point System and Penalties" and 30 CFR 845.13. The Secretary has affirmatively disapproved the New Mexico point system to the extent it incorporates provisions remanded by the District Court in the February 26, and March 16, 1980 opinions (see Finding 4(i)(iii)).

15. EPA also notes that the New Mexico program contains no analogue to Section 401 of SMCRA, requiring the establishment of a State Abandoned Mine Fund. The Secretary notes that the approval contained in 931.10 is limited to Title V, and no decisions is being made at this time concerning Title IV of SMCRA.

16. EPA states that the New Mexico submission contains no counterpart to SMCRA Section 703, which prohibits firing or, in any other way, discriminating against an employee because of that employee's instituting or participating in proceedings related to the administration or enforcement of the Act. The Secretary notes that the protections in Section 703 of SMCRA extend to all employees of all operations in the United States as a matter of federal law. As such, it is not necessary for the State to have adopted identical provisions.

17. EPA suggests that New Mexico include in its data base and inventory requirements for designation of lands unsuitable for mining, the data developed by programs administered under the Clean Water Act. The Secretary notes that this suggestion is beyond the requirements of the federal standard mandated by SMCRA in Section 522 or the implementing federal rules in 30 CFR Chapter VII, Subchapter F, and as such, cannot be required of New Mexico.

18. EPA suggests that the New Mexico counterparts to 30 CFR 779.15 and 30 CFR 779.16, 8-15 and 8-16, should include provisions insuring that there will be coordination with the water quality management agency to determine if there are conflicts between water quality activities and mining operations. The Secretary finds that the New Mexico provisions mirror the federal provisions and are, therefore, acceptable.

19. EPA contends that the New Mexico program requires major mines to monitor air emissions in a manner sufficient to estimate increment consumption, but that it does not demand similar information of minor facilities. The Secretary notes that as a result of *Alabama Power* v. *Costle*, 606 F. 2d 1068 (C.A.D.C. 1979), air permits are no longer required for coal mines, except those that contain large crushing facilities that are distinct point sources. The New Mexico regulation is consistent with this concept.

20. The National Park Service (NPS) requests that provision be made in the New Mexico program to allow for NPS involvement in the development of appropriate bond amounts in mine plan approval process in those instances where mining may have the potential to affect the resources of park units in New Mexico. NPS would also like to participate in inspections in cases where NPS units may be affected, especially in instances when inspections are in response to a partition or notification of violation. The Secretary notes that New Mexico's Section 2-11(a) of the regulations spells out that no surface coal mining shall be conducted on any lands which will adversely affect any publicly owned park unless approved jointly by the Director of the Division of Mining and Minerals and the federal, State, or local agency having jurisdiction over the park. The Secretary notes that the NPS has access to the inspection process through the provisions of Part 29 of the New Mexico regulations. The Secretary believes that this should adequately insure involvement of the NPS and other agencies affected by such decisions.

21. NPS objects that the New Mexico program does not provide for coordination with the Advisory Council as required by Section 106 of the National Historic Preservation Act. The Secretary believes that the Programmatic Memorandum of Agreement between OSM and the Advisory Council on Historic Preservation (see 45 FR 41998, June 23, 1980), when implemented will allow the State Historic Preservation Officer to have an integral part in insuring identification of historic lands for each permit application. However, 30 CFR 761.11(e) and 761.12(f)(g) have been suspended to the extent that (1) surface coal mining operations are prohibited on lands that would affect places "eligible for listing on" the National Register of Historic Places, and (2) the prohibitions apply to privately owned places listed on the National Register. Therefore, the Secretary must disapprove any portion of New Mexico's proposed program containing such language. The Secretary is satisfied that the requirements of SMCRA is met by the program as well as the requirements of Section 106 of the National Historic Preservation Act.

22. NPS contends that it should be given an opportunity to directly participate in developing criteria for designating lands as unsuitable for surface coal mining near NPS units. These criteria, according to NPS, should be related to all resources of the NPS units, and to the indirect effects which may occur on fragile lands. NPS contends that the establishment of buffer zones around NPS lands must not be left solely to other agencies with interests potentially at variance with NPS policy, especially when the scenic and environmental integrity of the park lands may be involved. The Secretary notes that Section 2-12(e) of the New Mexico regulations spells out the procedures which guarantee the involvement of park management agencies in the lands unsuitable process. The Secretary is satisfied that the mandate of SMCRA is met and that the interests of those agencies are adequately protected in the New Mexico program.

The Secretary has instructed the Park Service not to seek criteria in state programs which would establish "buffer zones" adjacent to National parks as automatically unsuitable for coal mining, unless these lands meet one or more of the other specific criteria for designation. On June 4, 1979, the Secretary made final decisions on the Federal Coal Management Program. Included in those decisions were numerous changes in the proposed unsuitability criteria for federal lands. The Secretary chose to delete the automatic "buffer zone" language for national parks and certain other federal lands from the first criterion (43 CFR 3461.1(a)). Instead, he stated lands adjacent to a national park should only be found unsuitable if they are covered by one of the other specific criteria (43 CFR 3461.1(b)-(t)). This instruction to the Park Service assures that that agency's approach to State unsuitability criteria will be compatible with the Secretary's policy on federal unsuitability criteria.

23. The Department of Energy (DOE) notes that the New Mexico program includes the possibility of a waiver of the topsoil removal requirements of 30 CFR 816.22 in cases where slopes are too steep to operate safely, and contends that the appropriate alternative is to prohibit mining due to high erosion potential. The Secretary is approving the New Mexico program which allows for the substitution of other suitable alternatives in cases where topsoil cannot be saved due to safety considerations. The Secretary feels that if other suitable materials exist in sufficient quantities, then topsoil can be left in certain areas.

24. DOE contends that in New Mexico regulation 20-124 the remedy for subsidence problems is limited to compensation of the landowner, while the federal analogue, 30 CFR 817.124, requires both compensation and restoration. The Secretary believes that the New Mexico proposal is consistent with the federal regulation because 30 CFR 817.124 allows compensation or restoration, but does not require both.

25. DOE asks for an explanation of the reasoning for New Mexico's omission of the 12-inch lift requirement for road construction under 30 CFR 816.152(d)(4). In the regulations that were promulgated on May 15, 1980, and submitted to OSM on June 11, 1980, the 12-inch requirement has been added to New Mexico regulation 20-152. The Secretary also notes that this is one of the provisions being affirmatively disapproved.

26. DOE asks that the New Mexico program include the requirement of 30 CFR 785.17(b)(2) which states that a reclamation plan application shall include the proposed method and type of equipment to be used for removal, storage and replacement of soil. Section 508(a)(5) of SMCRA explicitly calls for a description of equipment to be used in mining and reclamation operations. The Secretary believes that NMSA 69-25A-12(a)(5) includes the requirements of SMCRA Section 508(a)(5).

27. DOE comments that New Mexico had deleted the public participation requirements of 30 CFR 776.12(b), 776.14 and 785.13(g), which include the opportuntiy for public notice and comment and the opportunity for judicial review of agency action. The Secretary notes that the State of New Mexico included these public participation requirements in the regulations which were promulgated on May 15, 1980 and submitted to OSM on June 11, 1980.

28. DOE comments that the New Mexico program should include provisions for the protection of State employees as required by 30 CFR 704. The Secretary notes that New Mexico has agreed to include stipulations in every permit that will allow the State to invoke criminal penalties if a State employee is interfered with during the performance of his duties. As such, the program is consistent with the intent of SMCRA. (See Finding 4(p)).

29. DOE comments that the New Mexico point system for civil penalties described in New Mexico regulation 31-11 is not the equivalent of the federal system. The Secretary notes that the commenter is correct. The Secretary has affirmatively disapproved the New Mexico civil penalty assessment system to the extent it incorporates provisions remanded by the court. (See Finding 4(i)(iii)).

30. The Fish and Wildlife Service (FWS) expresses concern that New Mexico has omitted from its regulations an analogue to 30 CFR 770.12, which requires coordination and review with the applicable requirements of the Endangered Species Act and the Fish and Wildlife Coordination Act. The Secretary believes that New Mexico has demonstrated that the requirements for consultation have been met, and that the program is consistent with SMCRA. (See Finding 4(d)(i)).

31. FWS objects to New Mexico's analogue to 30 CFR 779.20, 8-20, in which the State specifically includes the applicant in the consultation process which determines the level of detail and the extent of the areas to be included in studies of fish and wildlife and their associated habitats. The Secretary notes that in the regulations promulgated on May 15, 1980, and submitted to the Secretary on June 11, 1980, incorporated this change. The Secretary also notes that this provision has been affirmatively disapproved pursuant to the order of the District Court.

32. FWS also requests that the New Mexico analogue to 30 CFR 779.20(c)(3), 8-20(c)(3), include the requirement of the federal regulations that the guidance forthcoming from fish and wildlife agencies be in "written" form in order to insure that the consultation process is made a matter of record. The Secretary notes that because of the District Court decisions, this provision of the program is affirmatively disapproved since it is based upon the remanded federal rule. As a consequence the State cannot be required to add this as a condition of approval at this time.

33. FWS comments that the New Mexico analogues to 30 CFR 780.16 and 30 CFR 786.19, 9-16 and 11-19, have restricted consideration of threatened or endangered species to only those species indigenous to the State. The Secretary has conditioned approval of the State program on modification of regulation 11-19(0) to afford protection of all species protected by the Endangered Species Act of 1973 (see Finding 4(d)(vi)).

34. FWS expressed its support for some additional language, not contained in the Federal regulations, which the State added to its analogue to 30 CFR 815.15(d), 19-15(d). The additional language places discretion in the Director regarding return to approximate original contour if such action would cause excessive environmental degradation. The Secretary agrees in

principle with this approach, but has requested the State to place some outside limits on the use of this alternative. Consistent with Finding 4(e), this has been invoked as a condition of approval.

35. The FWS supports the New Mexico change in the analogue to 30 CFR 816.116(d)(2), 20-116, insofar as it eliminates a specified stocking rate of woody plants. The commenter notes, however, that the State alternative is flawed in that it does not consider density prior to disturbance. The State of New Mexico has made a change in this regulation which places the determination of the number of woody plants under the State Forester. This approach should allow density prior to disturbance to be factored into the determination. The Secretary found that these modifications did not meet the requirements for approval of alternatives established in 30 CFR 731.13 and correction of this deficiency a condition of approval (see Finding 4(c)(x)).

36. The FWS expresses concern over the inconsistencies in the New Mexico Wildlife Conservation Act and the Endangered Species Act of 1973. The commenter notes that the only provision in the Endangered Species Act which allows an unauthorized taking of an endangered or threatened species is dependent upon the prevention of bodily harm. The State Act is more lenient in that it allows an unauthorized taking if there is an immediate threat to private property. As described above in Finding 4(d)(vi), the Secretary has determined that the federal statute preempts the State statute insofar as the two acts conflict. The Secretary specifically pre-empted and superseded the conflicting portion of the State Act as part of the approval of the New Mexico State program.

37. The Advisory Council on Historic Preservation (ACHP) and the NPS contend that, subject to Section 106 of the National Historic Preservation Act, the Secretary is obligated at this time to obtain the written comments of the State Historic Preservation Officer as to the likelihood of the New Mexico permanent regulatory program affecting properties included in, or eligible for inclusion in, the National Register of Historic Places. The Secretary notes that the State Historic Preservation Officer has had the opportunity to comment on the content of the regulatory program that will affect the entire State of New Mexico. Further opportunities to comment will be available on a case-by-case basis in connection with specific mine plan applications that come before the regulatory authority. The Secretary believes that the Programmatic Memordum of Agreement betwen OSM and ACHP (see 45 FR 41938, June 23, 1980), when implemented will allow the State Historic Preservation Officer to have an integral part in insuring identification of historic lands for each permit application. The Secretary believes that these opportunities satisfy the responsibility which he must fulfill under Section 503(b) of SMCRA and Section 106 of the National Historic Preservation Act.

38. The ACHP asks for a specific change in the wording of 8-12(b) to read: "Historic lands as defined in Section 1-5 within the proposed mine plan and adjacent areas. The Historic Preservation Bureau of the State Planning Division in coordination with the State Archeologist shall prescribe the necessary steps to ensure adequate identification of historic lands for each application." Without passing judgment on the merits of the suggestion, the Secretary notes that, as it was finally promulgated on May 15, 1980, the State regulation is a mirror of the federal language contained in 30 CFR 779.13 and 30 CFR 783.13. The standard by which a program is to be judged is that of equivalency with SMCRA, and the Secretary's 30 CFR VII, and the State language meets that test.

39. The ACHP comments on an apparent mistake in cross-referencing in New Mexico regulation 9-31. The cross-reference in the original submission was to regulation 2-12(c). The ACHP contends that the correct reference should be to regulation 2-12(e). The Secretary notes that in the regulation as promulgated on May 15, 1980, the State recognized the error and made the change requested.

40. The ACHP comments that it would like to see the language in regulation 11-11(c)(1) be made more specific in terms of "historic preservation agencies." The Secretary notes that the State language is a mirror of the federal language in 30 CFR 786.11(c)(1), and as such, fully meets the standard for approval.

41. The Army Corps of Engineers (ACE) comments that regulation 8-19 should require as part of each permit application, information on existing carrying capacity in animal units *and* potential carrying capacity instead of allowing either method. The Secretary notes that the requirements of 8-19 are consistent with those in 30 CFR 779.19 and 783.19, and as such, the State provision is acceptable (See Finding 4(d)(iii)).

42. The ACE comments that the consultation process called for in regulation 8-20 should include the landowner or responsible land management agency as well as the applicant and the Department of Game and Fish. The Secretary notes that in accordance with the Court opinion of May 16, 1980, this provision has been affirmatively disapproved since it is based upon remanded federal rule 30 CFR 779.20.

43. The ACE points out an incorrect statutory citation in the body of regulation 9-16(b)(1). ACE states that "17-3-37" should be "17-2-37." This was pointed out to New Mexico and the appropriate change was made.

44. The ACE comments on a perceived inconsistency between the requirements of regulations 20-111 and 20-116. The Secretary is satisfied that both provisions meet the test of equivalency when compared to 30 CFR 816.111 and 30 CFR 816.116 and as such, he has approved them.

45. The Mine Safety and Health Administration (MSHA) comments that New Mexico regulation 20-92 specifies that diversions shall be designed to accommodate the peak runoff from a 100-year, 24-hour precipitation event in accordance with 30 CFR 816.42. The commenter points out that MSHA guidelines recommend a 100-year, 6-hour frequency storm. The Secretary notes that he cannot require regulations more stringent than those in the federal program and, therefore, finds regulation 20-92 acceptable.

46. The State Historic Preservation Officer comments that the language in regulation 6-12(a)(3)(i) which refers to "districts, sites, buildings, structures or objects . . . and known archeological resources," should be changed to some broader, more inclusive language. The Secretary notes that the language in the State provision is a mirror of 30 CFR 776.12, and as such, is acceptable.

47. The General Counsel to the Navajo Nation, the Department of Interior Field Solicitor at Window Rock, Arizona, and the DNA—People's Legal Services, Inc. in Window Rock all expressed concern over the apparent intended assertion of jurisdiction over Indian lands by the State of New Mexico. The New Mexico statute omits any reference to Indian tribes and Indian lands. The regulations also omit all references. The State quite specifically disavows any applicability of the New Mexico program to federal lands, but there is no such disclaimer involving Indian lands. The commentators contended that the effect of this silence is the creation of a blanket of uncertainty concerning the State's intentions on Indian lands. Mr. D. E. Gray, Chairman of the New Mexico Coal Surface Mining Commission speaking on his own behalf,

addressed the jurisdiction of the State of New Mexico over lands within the state. He stated, "the Surface Mining Act as adopted by the New Mexico Legislature makes no distinction concerning the ownership of land subject to the Act other than federal lands." He further stated that certain definitional and substantive provisions of SMCRA address the issue of sovereignty over coal surface mining operations upon Indian land with the proviso "That nothing in this Act shall change the existing jurisdictional status of Indian lands." He indicated that the State will resist any attempt to limit the jurisdiction of the State of New Mexico outside the boundaries of established Indian reservations, until and unless Congress clearly pre-empts that jurisdiction. The commentators requested a specific statement by the State disavowing any jurisdiction on Indian lands as an appropriate remedy.

The Secretary has explicitly stated in his findings that the approval contained in 30 CFR 931.10 is limited to non-federal and non-Indian lands in the State of New Mexico. The Secretary's approval in no way acts to grant or endorse any assertion by New Mexico of jurisdiction over mining on Indian lands.

48. DNA—People's Legal Services, Inc. also expressed concern over the manner in which New Mexico has altered some of the definitions of terms used in the program. The commentator felt that the criteria dealing with land unsuitability had been severely restricted. The terms of specific concern include:

(a) Cemetery.

(b) Fragile lands.

(c) Historic lands.

The Secretary discussed the handling of cemetery in Finding 4(a)(i) and historic lands in Finding 4(a)(ii). The Secretary is satisfied that there is a justifiable rationale for the alteration of the definitions for cemetery and historic lands, and has approved them. With respect to the definition of fragile lands, the Secretary believes that all of the required components are present in accordance with 30 CFR 761.5. New Mexico has omitted only illustrative examples present in the federal definition.

49. DNA—People's Legal Services, Inc. also expressed concern that the New Mexico program was written in a way that might allow experimental practices or pilot projects to be conducted in a manner that might not comply with environmental safeguards. The commentator is apparently referring to the "Experimental Practices" section which is aimed at controlling experimental techniques in reclamation technology not experimental techniques in coal extraction. It should be pointed out that the Secretary, through the Director of OSM, still retains ultimate approval authority over all "Experimental Practices," and the Secretary has the authority to approve, under appropriate circumstances, experimental techniques that might lead to enhanced environmental protection.

50. DNA—People's Legal Services, Inc. asks that language be added to the "Suspension of Rules" section that would ensure that standards challenged in court action would continue to be enforced by the State until all appeals have been exhausted. The Secretary recognizes that the prescribed actions handed down by judicial authority will differ from case to case, and that the request of the commentators may directly conflict with the order of the court in question. The Secretary cites the recent District Court decision as a specific example. In that instance, the Federal District Court for the District of Columbia ordered the Secretary to affirmatively disapprove those portions of a State program which implement OSM regulations that the Court had set aside. Consequently, the language of the State, allowing the deletion of provisions mirroring federal provisions which have been judicially determined to be invalid, remanded, or withdrawn, is consistent with SMCRA.

51. The Environmental Policy Institute and the Public Lands Institute expressed concern with the addition to New Mexico's analogue to SMCRA 201, NMSA Section 6, of the word "reasonable" as a limiting factor on the power of the State to promulgate regulations to implement the Act. The federal Act states that the Secretary shall have the power to "publish and promulgate such rules and regulations as may be necessary to carry out the purposes and provisions of the Act". The Secretary that notes that, even though the federal language does not explicitly use the word "reasonable" as the State provision does, he has an implicit responsibility to ensure that any rulemaking in which he plays a role is done reasonably. The New Mexico provision is acceptable as consistent with the requirements of SMCRA.

52. Another concern of the EPI and PLI is that New Mexico, in its analogue to SMCRA 201, NMSA 69-25A-6, allows only "interested" persons to participate in a rulemaking process, while NMSA Section 7 permits any person to initiate a rulemaking proceeding. The EPI and PLI note that the federal Act and regulations allow "any person" to so participate and contend that New Mexico's statute should be consistent with SMCRA. The Secretary notes that the New Mexico statute permits any person to initiate rulemaking. Accordingly, any person who wishes to participate in a rulemaking, but was successfully challenged on the basis of his or her lack of an "interest," could simply initiate a rulemaking by petition covering the same subject. The Secretary presumes that this person's concerns could then be brought before the regulatory authority. Therefore, the Secretary concludes that any person may also participate in the rulemaking process, thus satisfying the commenters' concern.

53. The Environmental Policy Institute and the Public Lands Institute assert that New Mexico should be required to show that the adjudicatory hearing required by SMCRA Section 514 include full Administrative Procedures Act protections, including cross-examination in accordance with Judge Flannery's decision in the Permanent Regulation Litigation. Also, the EPI and PLI note, NMSA Section 18(F), New Mexico's analogue to SMCRA Section 514, appears to be inadequate in that it allows for administrative review pursuant to NMSA Section 29(b), which statute provides for an appeal to the Commission.

The Secretary has fully examined the adjudicatory hearing process proposed by New Mexico, and believes it is consistent with Section 514 of SMCRA, which requires that such a hearing "shall be of record, adjudicatory in nature, and no person who presided at a conference under Section 513(b) shall either preside at the hearing or participate in the decision thereon". The Secretary also notes that, in terms of appeals, New Mexico has added an additional layer of administrative appeal not present in the federal system. The review of the system prompted the Secretary to require New Mexico to demonstrate that no potential trial *de novo* problem exists. New Mexico made this demonstration in an Attorney General opinion, dated August 7, 1980 (Administrative Record No. NM 99), and the Secretary finds this provision consistent with federal requirements.

54. The Environmental Policy Institute and the Public Lands Institute claim that New Mexico, in NMSA Section 22(E), has seriously weakened the criminal penalty contained in SMCRA Section 518. The State statute provides that there can be no criminal penalty unless the time for appeal has expired or until the right of appeal has been exhausted. The Secretary notes that the State Attorney General's Opinion of August 7, 1980, demonstrated the equivalency of

the New Mexico standard (see Finding 4(i)(i)).

55. The Environmental Policy Institute and the Public Lands Institute have suggested that New Mexico, in its analogue to SMCRA 519, NMSA 69-25A-23, should make it clear that citizens have the right, under the District Court's decision of February 26, 1980, to visit the mine site prior to the bond release hearing. The Secretary has affirmatively disapproved New Mexico regulation 17-11(e) to the extent to which it fails to provide for citizen access to the mine site in conjunction with an informal conference concerning release of the performance bond, in accord with the court's decision.

56. The Environmental Policy Institute and the Public Lands Institute have noted with concern that New Mexico, in its counterpart to SMCRA Section 520(b)(2), NMSA 69-25A-24B, requires that a citizen show that the violation or order complained of would "irreversibly impair" a legal interest in order to bring an immediate action. Under SMCRA Section 520(b)(2), a citizen need show that the violation or order would "immediately affect" a legal interest in order to bring any immediate action. The Secretary finds the requested State response demonstrating the equivalance of the two statutes to be adequate (See Finding 4(1)(i)).

57. The Environmental Policy Institute and the Public Lands Institute note that the New Mexico counterpart to SMCRA Section 521(a)(2) and (3), NMSA 69-25A-25, vests enforcement authority for both cessation orders and notices of violation only in the "Director", while the federal statute vests such authority in both the Secretary and the inspector (authorized representative). The Secretary notes that the State defines Director in a manner that includes his "designated representatives". The State was asked to demonstrate the equivalency of this language. The Attorney General's Opinion submitted on August 7, 1980 demonstrated equivalency to the satisfaction of the Secretary (see Finding 4(j)(ii)).

58. The Environmental Policy and Public Lands Institutes assert that Section 29 of the New Mexico statute does not allow for the assessment of attorneys' fees and costs against the Director or the Commission, as required by SMCRA Section 525(e), which allows attorneys' fee awards against the governmental body. The Secretary notes that this has been recognized as a deficiency in the program, and that it has been presented to New Mexico as one of the conditions of approval (see Finding 4(l)(iii)).

59. The Environmental Policy Institute and the Public Lands Institute note that New Mexico's counterpart to 30 CFR 764.17 requires an adjudicatory hearing for a designation petition. They feel that this is in direct conflict with the federal regulation, the comment asserts, which requires a legislative hearing. The Secretary, as explained in Finding 4(k)(ii), has made the establishment of certain procedures by the State a condition of approval.

60. Regarding New Mexico's counterpart to 30 CFR 787 which concerns administrative and judicial review of decisions on permit applications, the Environmental Policy Institute and the Public Lands Institute question whether the prohibition of contact between parties before the Commission and the Commission applies also to contacts between the Commission and the Director or his representatives in matters before the Commission. EPI and PLI have contended that it must under minimum due process standards. The State of New Mexico has assured the Secretary in the submission of June 11, 1980, that the manner in which New Mexico law operates is consistent with the aim of this comment.

61. The Environmental Policy Institute and the Public Lands Institute note that all enforcement authority in New Mexico's counterpart to 30 CFR 843 (Federal Enforcement) Part 30, is vested in the "Director or his duly authorized representative", while the federal regulation delegates all field authority to the authorized representative. The Secretary requested a clarification from New Mexico on the manner in which field enforcement will be handled. New Mexico provided an Attorney General's Opinion on August 7, 1980, which explains the delegation of enforcement power to field representatives. The Secretary finds this explanation acceptable (see Finding 4(j)(ii)).

62. The Environmental Policy Institute and the Public Lands Institute pointed out that 30-11(b) of the State's regulations states that if affirmative obligations to abate are imposed, the inspector may consider suggestions by the operator concerning the economic and technological feasibility in determining the most expeditious means of abatement. EPI and PLI note that the federal regulations require abatement in the most expeditious manner physically possible, with cost not a consideration. The Secretary believes that the State language is not inconsistent with 30 CFR 843.11(b) as the State has explained that it intends that regulation 30-11(b) operate in the same manner as the federal provision (see Finding 4(j)(iii)).

63. The Environmental Policy Institute, the Public Lands Institute, and the Sierra Club expressed concern with New Mexico's analogue to 30 CFR 843.12(d), regulation 30-12(e)(2), which provides that the Director or his authorized representative *may* issue a cessation order if an interim step is not met. The New Mexico regulations section 30-12(e)(1) states that a cessation order *shall* be issued if the violation is not abated within the time set for abatement. The Secretary finds that the New Mexico regulation is acceptable because there is no obligation to use interim steps in 30 CFR 843.12(b)(2), and the time for accomplishment of an interim step may be extended under 30 CFR 843.12(c).

64. The Environmental Policy Institute and the Public Lands Institute noted that New Mexico's counterpart to 30 CFR 843.13(a)(1), regulation 30-13(b)(2), provides that violations shall not be attributed to the permittee if the permittee can show by clear and convincing evidence that the acts were not within the scope of employment or agency of the person committing the violation. 30 CFR 843.13(a)(1) provides that, "violations by any person conducting surface coal mining operations on behalf of the permittee shall be attributed to the permittee, unless the permittee establishes that they were acts of deliberate sabotage." The Secretary believes that the State regulation will operate in the same manner as 30 CFR 843.13 (See Finding 4(j)(iv)).

65. The EPI and the PLI note that New Mexico regulations 30-11(b) and 30-12(g) do not explicitly eliminate inability to comply as a defense to a notice of violation as does 30 CFR 843.18(a). The State explained that a notice of violation and a cessation order are analytically equivalent with respect to inability to comply, and the Secretary finds this explanation acceptable (See Finding 4(j)(vi)).

66. Concern was expressed by the Environmental Policy Institute and the Public Lands Institute that New Mexico's counterpart to 30 CFR 845.12(b), regulation 31-11(c), provides that civil penalties will normally be assessed when a violation accounts for 31 points or more. This conflicts with the federal regulations, according to the comment, which require a penalty when a certain threshold level is met. The Secretary notes that the New Mexico penalty assessment system has been affirmatively disapproved to the extent it incorporates provisions remanded by

the District Court of the District of Columbia.

67. The EPI and PLI commented that New Mexico should incorporate into its regulations provisions consistent with 43 CFR Part 4. The commenter requests that the Secretary be certain that New Mexico incorporate provisions providing for the award of attorneys' fees in actions against government entities. The Secretary has made this a condition of approval. The commenter also asserts that New Mexico has made no showing that its rules provide for as broad access to administrative proceedings and to discovery as is required by 43 CFR Part 4. The Secretary believes that these concerns are addressed in regulation 12.

68. The New Mexico Citizens For Clean Air & Water expressed concern that the State's program is replete with language giving flexibility to the State, such as language allowing (1) exemptions from returning lands to their original contour, (2) exemption from conducting underground coal mining in a manner which maintains the value and reasonably foreseeable use of surface lands, and (3) surface shaping in lieu of topdressing and seeding. The commenters contended that although flexibility is reasonable, it can be, and has been, reshaped into a loophole by industry lawyers. The commenter urged that New Mexico put into its regulations sufficient guidelines to specify exactly where exemptions may or may not be granted. The Secretary believes that the State program contains sufficient guidance on the flexibility inherent in the cited areas.

69. The New Mexico Citizens For Clean Air & Water also note that New Mexico's hearings on petitions for the designation of lands as unsuitable for mining are adjudicatory in nature, rather than legislative as specified in 30 CFR 764.17(2), but the commenter offered the suggestion that two categories of testimony be allowed: "technical" and "non-technical". Testimony given by witnesses who categorize themselves as "technical" could be cross-examined, while "non-technical" testimony would not be so subjected, according to the comment. The Secretary agrees with the commenter concerning the value of the categorization suggested and will evaluate the proposal when procedures for its implementation have been developed (see Finding 4(k)(ii)).

70. Support for the State's proposal that lawsuits against the Director of New Mexico's Division of Mining and Minerals or the Surface Mining Commission be brought in the District Court in Santa Fe was offered by the New Mexico Citizens For Clean Air & Water. The Secretary agrees that this approach is consistent with the intent of SMCRA and has approved the provision (see Finding 4(1)(ii)).

71. The Sierra Club objected to New Mexico's analogue to 30 CFR 764.17(a), 4-17, concerning the hearing requirements on petitions for the designation of lands as unsuitable for surface coal mining. The commenter notes that the State provides for adjudicatory hearings while the federal regulation states that the hearing shall be legislative in nature. The commenter was satisfied with the approach utilized in New Mexico by the Environmental Improvement Board. This is the process described in Finding 4(k)(ii) that places witnesses in one of two categories. The system appears to accomplish the goal of the federal provision which is the prevention of intimidation of lay witnesses. The Secretary will evaluate the proposal when procedures for its implementation have been developed.

72. Because the District Court has enjoined OSM from approving those portions of State programs which are based upon OSM regulations which have been suspended, remanded, or invalidated, which, it is alleged, has the practical effect of making it impossible for an operator to file a complete permit application, the Chairman of New Mexico's Surface Mining Commission recommended that either approval of the New Mexico program be deferred and the interim State regulatory program be continued, or that OSM otherwise provide that an operator need not submit an application until OSM and the State have adopted programs which will provide complete guidelines consistent with the July 10, 1980, decision of the Circuit Court of Appeals for the District of Columbia.

While the Secretary is sympathetic to the concerns of the State, the Act allows no discretion on the final program approval dates. The extensions that have occurred previously were in direct response to a Court Order of July 25, 1979, emanating from the U.S. District Court for the District of Columbia. The review schedule for the New Mexico submission was altered in accordance with the Court decision, and no further alteration is possible. The Secretary notes that under the Court's August 15, 1980, partial stay, the State may elect to have the Secretary *not* affirmatively disapprove any provisions which the May 16, 1980, opinion would have required him to disapprove. On August 22, New Mexico was informed of this opportunity.

73. The Public Lands & Environmental Policy Institutes noted that the New Mexico program has omitted the definition of "valid existing rights". The definition is one aspect of the permanent regulatory program that was remanded by the District Court and the State, therefore, need not have such definition.

74. It was contended by the Public Lands Institute and the Environmental Policy Institute that New Mexico's definition of "cemetery" is too restrictive and omits many of the areas OSM's definition includes. The Secretary believes that the New Mexico definition, when read in conjunction with other State statutes and other federal statutes, is consistent with the definition contained in 30 CFR 761.5 (See Finding 4(a)(i)).

75. The Public Lands Institute and the Environmental Policy Institute expressed concern that New Mexico has omitted the first sentence of the definition of "fragile lands" as it appears in the Federal regulations. The comment contended that this language must be added to give specificity. The Secretary finds that the New Mexico definition in regulation 1-5 contains all of the concepts enunciated by the definition contained in 30 CFR 761.5, and as such, is acceptable.

76. In their comments, the Public Lands Institute and the Environmental Policy Institute indicated that New Mexico's definition of "substantial legal and financial commitments in a surface coal mining operation" in regulation 1-5 requires the addition of the last two sentences of the definition as it appears in 30 CFR 762.5 so that it will be clear that the costs of acquiring the coal are not included. The Secretary notes that the federal definition does not state that the costs of acquiring the coal are not to be included, but rather that the costs of acquiring the coal are not alone sufficient to constitute such commitments. New Mexico allows those costs of acquisition to be a component of the total costs to be considered. The Secretary believes that the definition in the State program is consistent with 30 CFR 762.5.

77. The Public Lands Institute and the Environmental Policy Institute asked that New Mexico be required to include in its definition of "natural hazard lands" the examples of areas subject to landslides, cave-ins, large or encroaching sand dunes, severe wind or soil erosion, frequent flooding, avalanches, and areas of unstable geology, which appear in 30 CFR 762.5. The Secretary believes that this language in the federal regulations is illustrative, and that the State need not include equivalent language.

78. New Mexico's definition of "historic lands" does not appear to be consistent with the federal definition in

30 CFR 762.5, the Public Lands Institute and Environmental Policy Institute asserted. The Secretary has found that the State program adequately addresses this issue (see Finding 4(a)(ii)).

79. The Public Lands Institute and the Environmental Policy Institute pointed out that the New Mexico submission does not have an equivalent of 30 CFR 761.11(a) and (b), which prohibit mining in National Parks, the National Wildlife Refuge System, the National System of Trails, etc. This prohibition must be added, the commenters maintain. The Secretary notes that New Mexico will not have permit approval authority over Federal lands until a cooperative agreement is signed. The State has purposely omitted all references to federal lands in this program since New Mexico presently has no authority over federal lands. These references may be more appropriately incorporated into a cooperative agreement.

80. The Public Lands and Environmental Policy Institutes recommend that references be made in regulation 2-12 to 30 CFR 761.11 (a) and (b). The lands referred to in 30 CFR 761.11(a) and 761.11(b) are federal lands over which New Mexico has no jurisdictional authority. Accordingly, New Mexico need not include such references.

81. The Public Lands & Environmental Policy Institutes stated that New Mexico has omitted in its program a counterpart to 30 CFR 761.12(c), concerning mining operations within National Forest boundaries, and insisted that this provision be added. The State of New Mexico is not being granted any jurisdiction over federal lands and, therefore, need not include such a provision.

82. The Public Lands & Environmental Policy Institutes question whether the waiver provision in New Mexico's regulation 2-12(d) is as protective of owners rights as is 30 CFR 761.12(e). Since the State provision requires a written waiver by the owner of the dwelling, the Secretary believes rule 2-12(d) is consistent with 30 CFR 761.12(e).

83. It was contended by the Public Lands & Environmental Policy Institutes that New Mexico's regulation 3-11(a) should reference SMCRA, as does 30 CFR 762.11. The Secretary notes that the authority for the New Mexico regulations stems from the New Mexico Surface Mining Act, not SMCRA. The reference in 3-11(a) is, therefore, proper.

84. The Public Lands & Environmental Policy Institutes contended that New Mexico's regulation 4-21 does not make it clear when the data and inventory system will begin as required by 30 CFR 764.21. The Secretary notes that the language of 4-21 is a mirror of the language in 30 CFR 764.21 and, as such, it is acceptable.

85. The Public Lands & Environmental Policy Institutes stated that New Mexico's program does not include the equivalent of 30 CFR 769, concerning the process for designation on federal lands. The commenter noted that it deserves the right to comment and have such comments on the record when this section is made available. The Secretary notes that federal lands will be addressed in a cooperative agreement, and the procedures governing public comment will apply to the development of that agreement.

86. The Public Lands & Environmental Policy Institutes note that New Mexico had omitted any analogue to SMCRA Section 517(h), thus making no provision for informal review of refusals to issue citations. In the regulations, as promulgated on May 15, 1980, New Mexico has added Sections 29-12, 29-14, 29-15, and 29-16, which guarantee that these rights are available to citizens.

87. It was noted by the Public Lands & Environmental Policy Institutes that the civil suit provision of New Mexico's statute limits civil actions to the Director and the Commission. This provision must be broadened, it was argued, to cover governmental agencies or instrumentalities as is required by SMCRA Section 520(a)(1). The Secretary has requested a demonstration of equivalency, and the State provided an explanation on August 7, 1980, which is satisfactory (see Finding 4(1)(iv)).

88. The Public Lands & Environmental Policy Institutes indicated that New Mexico's counterpart to SMCRA Section 520(e), NMSA 69-25A-24G, should include the language found in the federal statute, which guarantees the citizen's right to seek relief against the director of the State's regulatory authority. The Secretary notes that the State statute contains the same protections as the federal statute in 69-25A-24G of NMSA 1978.

89. It was noted by the Public Lands & Environmental Policy Institutes that New Mexico has omitted from its program the last sentence of SMCRA Section 521(a)(4), which states that if a permittee is unable to show cause, the Director or his authorized representative shall forthwith suspend or revoke the permit. The commenter expressed the belief that this language adds specificity to the action to be taken, and how it is to be taken when the permittee fails to show cause. The Secretary believes that the specificity requested by the commenter is appropriately set out in the New Mexico regulations Section 30-13.

90. The Public Lands & Environmental Policy Institutes asserted that the New Mexico regulations must include the language found in 30 CFR 840.11(d)(1), which states that operations may be inspected at nights or on weekends and holidays must be included. The Secretary requested that the State demonstrate the authority and intent to conduct such inspections. During a meeting with Department of the Interior officials on September 5, 1980, New Mexico provided an assurance that it would conduct inspections on nights, holidays, and weekends. (See Finding 4(g)(iii)).

91. The Public Lands & Environmental Policy Institutes also noted that New Mexico's regulations do not contain the language found in 30 CFR 840.12(a), which provides that the State regulatory authority does not need a search warrant to enter a coal exploration, mining, or reclamation operation. The Secretary requested that the State include a demonstration of equivalency. New Mexico provided an Attorney General's Opinion dated August 7, 1980, which the Secretary finds to establish consistency with 30 CFR 840.12(a) (see Finding 4(g)(iv).

92. It was also noted by the Public Lands & Environmental Policy Institutes that New Mexico's regulations do not include an equivalent to 30 CFR 843.13(a)(4), which provides the method of determining the number of violations per year in order to find patterns of violations. The Secretary notes that the methodology for determining the pattern of violations is contained in New Mexico regulation 30-13(a), which is consistent with 30 CFR 843.13.

93. The Public Lands & Environmental Policy Institutes noted that New Mexico has omitted equivalents to 30 CFR 843.15 (f) and (g). The Secretary notes that the language referred to by the commenters is contained in New Mexico regulation 30-15(c).

94. It was also of concern to the Public Lands & Environmental Policy Institutes that New Mexico also omitted any equivalent to 30 CFR 843.17, which mandates that no notice of violation or cessation order may be vacated for failure to give notice to the state regulatory authority, or because it is later determined that there was insufficient information to justify an inspection. The Secretary notes that 30 CFR 843.17 is a provision stating responsibilities of the Director of OSM toward State regulatory authorities. It is not necessary to include this provision in a state program.

95. The EPI, PLI, and the Sierra Club expressed concern about the extent of field authority enforcement power

vested in the "duly authorized representatives" of the Director. The Secretary believes that New Mexico regulation 30–12 is consistent with 30 CFR 843.11. Additionally, in response to the Secretary's concern, in the September 5, 1980, meeting, the State asserted that duly authorized representatives would be conducting enforcement in the field (See Finding 4(g)(v)).

96. The EPI and the PLI requested that New Mexico regulation 3–11(a) reference SMCRA, as 30 CFR 762.11 does. The Secretary notes that the New Mexico regulation references the New Mexico Surface Mining Act which is the correct underlying authority for the New Mexico regulations. As such, 3–11(a) is consistent with 30 CFR 762.11.

97. The Sierra Club pointed out that NMSA 24(b) employs a different standard than that in SMCRA in deciding whether the 60-day notice of suit against the regulatory authority can be waived. The commenter requests that it be changed to be made consistent with SMCRA. The Secretary requested a demonstration of equivalency, and the State provided an explanation on August 7, 1980, which is satisfactory (see Finding 4(l)(i)).

98. The Sierra Club also noted that Section 525(c) of SMCRA allows the awarding of attorneys fees against a government body, while the New Mexico program does not specifically authorize such action. The Secretary notes that he has imposed as a condition of approval the promulgation of regulations consistent with 43 CFR 4.1290–4.1296, which provide for such award (see Finding 4(l)(iii)).

99. The Sierra Club also asserted that 69–25A–25 NMSA 1978 vests enforcement authority in the Director, whereas the federal counterpart, Section 521 of SMCRA, vests authority in both the Secretary and his duly authorized representatives. The Secretary notes that the New Mexico program defines Director in a manner which includes his designees. The Secretary requested an Attorney General's Opinion confirming the equivalence of "designee" and "duly authorized representative." An Opinion satisfactory to the Secretary was delivered on August 7, 1980 (see Finding 4(j)(ii)).

100. The Sierra Club objected to the language in New Mexico regulation 30–11(b), which allows consideration to be given by an inspector to the suggestions of the operator concerning the economic and technical feasibility in determining the most expeditious means of abatement. The Secretary directs the commenter to his response to Comment No. 62.

101. The Sierra Club also commented that the New Mexico civil penalty assessment system is not consistent with the federal regulations in that it does not establish an absolute threshold level for the imposition of monetary penalties. The Secretary notes that the New Mexico system fulfills the mandatory criteria for a penalty system as enunciated by the District Court of the District of Columbia in its May 16, 1980, decision. As such, it meets the standard for approval by the Secretary (see Finding 4(i)(iii)).

102. The Sierra Club, EPI and PLI commented that some bounds should be placed on the use of the highwall retention alternative in New Mexico regulation 20–102(d). The Secretary notes that the regulation, as promulgated, specifies that highwalls can only be left in areas where natural cliff and bluff topography existed previously. The Secretary also notes that as a condition of approval, he has requested an additional criterion which would specify that in no case may the retained highwall extend for a greater lateral distance than the natural cliff did (see Finding 4(b)).

103. EPI and PLI commented that New Mexico must amend regulation 31–15(b), regarding the $750 per day failure-to-abate penalty, to conform to the revised federal regulation, published on September 4, 1980 (45 FR 58780). In a letter dated September 5, 1980 (Administrative Record No. NM 119), the Director of the New Mexico Mining and Minerals Division declares that it shall be his policy to take appropriate action after the running of the 30-day maximum period for assessing civil penalties following the permittee's failure to abate a violation. Such action shall include issuance of an order to show cause why a permit should not be suspended or revoked, or a request that the Attorney General pursue either an injunctive or criminal action against the permittee. The Secretary believes that the State's policy is consistent with 30 CFR 845.15(b), as revised (see Finding 4(i)(iv)).

104. EPI and PLI objected to what was perceived as an off-the-record resolution by the Secretary regarding New Mexico regulation 30–12(e)(2), which makes issuance of a cessation order discretionary based on a failure to accomplish an interim step. This apparent deficiency was never discussed with the State because the Secretary has found it not to be a problem (See response to Comment 63).

105. EPI and PLI object to New Mexico's lack of a provision comparable to SMCRA Section 704. In a letter dated August 7, 1980, from Charles E. Roybal, Counsel, Mining and Minerals Division, to OSM, the State agreed to add language consistent with SMCRA Section 704 to each permit (Administrative Record No. NM 99). The Secretary has found this approach acceptable (See Finding 4(p)).

106. EPI and PLI objected to New Mexico's explanation of equivalency to the venue requirement of SMCRA Section 520(c)(i). EPI and PLI contend that a citizen should be able to bring suit either locally or in the state capital. The Secretary cannot require states to have procedural requirements which are different from those in SMCRA. Since New Mexico constitutes a federal judicial district, the State venue provision is acceptable (See Finding 4(l)(ii)).

107. EPI and PLI expressed concern over the conflict between the New Mexico Wildlife Conservation Act and the Endangered Species Act of 1973. In Finding 4(d)(vi), the Secretary indicates that, to the extent the State provision conflicts with federal law, it is to be set aside.

108. EPI and PLI objected to the Secretary's reliance on New Mexico's assertion that the material to be kept confidential pursuant to NMSA 69–25A–21H is only data on coal production, coal exploration, and archeological sites (See Administration Record No. NM 119). The Secretary believes that he may rely on such an assertion. Additionally, NMSA 18–6–11–1, regarding the confidentiality of archeological sites, appears in Appendix B of the original submission.

109. EPI and PLI object to the omission of any reference to native Americans in New Mexico regulation 3–11(a)(2). As indicated in Finding 4(a)(ii), the State has assured the Secretary that sites having religious or cultural significance to native Americans are protected under New Mexico law.

F. Secretary's Decision

Background on Conditional Approval

The Secretary is fully committed to two key aims which underlie SMCRA. The Act calls for comprehensive regulation of the effects of surface coal mining on the environment and public health and safety and for the Secretary to assist the states in becoming the primary regulators under the Act. To enable the states to achieve that primacy, the Secretary has undertaken many activities of which several are particularly noteworthy.

The Secretary has worked closely with several state organizations such as the Interstate Mining Compact Commission, the Council of State

Governments, the National Governors Association and the Western Interstate Energy Board. Through these groups OSM has frequently met with state regulatory authority personnel to discuss informally how the Act should be administered, with particular reference to unique circumstances in individual states. Often these meetings have been a way for OSM and the states to test new ideas and for OSM to explain portions of the federal requirements and how the states might meet them. Alternative state regulatory options, the "state window" concept, for example, were discussed at several meetings of the Interstate Mining Compact Commission and the National Governors Association.

The Secretary has dispensed over $6.9 million in program development grants and over $37.6 million in initial program grants to help the states to develop their programs, to administer their initial programs, to train their personnel in the new requirements, and to purchase new equipment. In several instances OSM detailed its personnel to states to assist in the preparation of their permanent program submissions. OSM has also met with individual states to determine how best to meet the Act's environmental protection goals.

Equally important, the Secretary structured the state program approval process to assist the states in achieving primacy. He voluntarily provided his preliminary views on the adequacy of each state program to identify needed changes and to allow them to be made without penalty to the state. The Secretary adopted a special policy to insure that communication between him and the states remained open and uninhibited at all times. This policy was critical to avoiding a period of enforced silence with a state after the close of the public comment period on its program and has been a vital part of the program review process (*see* 44 FR 54444, September 19, 1979).

The Secretary has also developed in his regulations the critical ability to approve conditionally a state program. Under the Secretary's regulations, conditional approval gives full primacy to a state even though there are minor deficiencies in a program. This power is not expressly authorized by the Act; it was adopted through the Secretary's rulemaking authority under 30 USC 201(c), 502(b), and 503(a)(7).

The Act expressly gives the Secretary only two options—to approve or disapprove a state program. Read literally, the Secretary would have no flexibility; he would have to approve those programs that are letter-perfect and disapprove all others. To avoid that result and in recognition of the difficulty of developing an acceptable program, the Secretary adopted the regulation providing the authority to approve conditionally a program.

Conditional approval has a vital effect for programs approved in the Secretary's initial decision: it results in the implementation of the permanent program in a state months earlier than might otherwise be anticipated. While this may not be significant in states that already have comprehensive surface mining regulatory programs, in many states that earlier implementation will initiate a much higher degree of environmental protection. It also implements the rights SMCRA provides to citizens to participate in the regulation of surface coal mining through soliciting their views at hearings and meetings and enabling them to file requests to designate lands as unsuitable for mining if they are fragile, historic, critical to agriculture, or simply cannot be reclaimed to their prior productive capability.

The Secretary considers three factors in deciding whether a program qualifies for conditional approval. First is the state's willingness to make good faith efforts to effect the necessary changes. Without the state's commitment, the option of conditional approval may not be used.

Second, no part of the program can be incomplete. As the preamble to the regulations says, the program, even with deficiencies, must "provide for implementation and administration for all processes, procedures, and systems required by the Act and these regulations" (44 FR 14961). That is, a state must be able to operate the basic components of the permanent program: the designation process; the permit and coal exploration systems; the bond and insurance requirements; the performance standards; and the inspection and enforcement systems. In addition there must be a functional regulatory authority to implement the other parts of the program. If some fundamental component is missing, conditional approval may not be used.

Third, the deficiencies must be minor. For each deficiency or group of deficiencies, the Secretary considers the significance of the deficiency in light of the particular state in question. Examples of deficiencies that would be minor in virtually all circumstances are correction of clerical errors and resolution of ambiguities through attorney general's opinions, revised regulations, policy statements, changes in the narrative or the side-by-side.

Other deficiencies require individual consideration. An example of a deficiency that would most likely be major would be a failure to allow meaningful public participation in the permitting process. Although this would not render the permit system incomplete because permits could still be issued, the lack of any public participation could be such a departure from a fundamental purpose of the Act that the deficiency would most likely by major.

The use of a conditional approval is not and cannot be a substitute for the adoption of an adequate program. Section 743.13(i) of Title 30 of the regulations gives the Secretary little discretion in terminating programs where the state, in the Secretary's view, fails to fulfill the conditions. The purpose of the conditional authority power is to assist, not excuse, states from achieving compliance with SMCRA.

Conditional Approval

As indicated above under "Secretary's Findings," there are minor deficiencies in the New Mexico program which the Secretary requires be corrected. In all other respects, the New Mexico program meets the criteria for approval. The deficiencies identified in prior findings are enumerated below.

The first deficiency, as indicated in Finding 4(c)(xix), is the absence of a requirement for keyway cuts and rock toe buttresses in accordance with 30 CFR 816.71. The deficiency is minor because it is a typographical mistake. In the interim between the date of conditional approval and the date of regulatory amendment, New Mexico will require keyway cuts and rock toe buttresses.

The second deficiency, as indicated in Finding 4(k)(ii), is the lack of procedures for hearings on petitions to designate lands unsuitable. The regulatory amendment will be promulgated prior to the holding of any such hearings and is, therefore, minor.

The third deficiency, as indicated in Finding 4(e), is the inclusion in the New Mexico program of language that allows a variance to returning to approximate original contour in exploration sites in New Mexico. The deficiency is minor because it is an alternative to restoration to approximate original contour that will not be granted in the State until the regulation is changed to conform with 30 CFR 815.15.

The fourth deficiency, as indicated in Finding 4(j)(i), is the lack of a requirement for posting and publishing show cause orders to facilitate full public participation. The deficiency is minor because the State has agreed to post and publish any show cause orders that may be issued in the interim prior to

regulatory amendment to conform with 30 CFR 843.13 (c) (1)–(3) and (d).

The fifth deficiency, as indicated in Finding 4(l)(iii), concerns the lack of a complete set of provisions covering the award of attorney's fees. The deficiency is minor because the regulatory amendment will be promulgated prior to the issuance of any orders which could result in petitions for the award of attorney's fees.

The sixth deficiency, as indicated in Finding 4(a)(iii), is the lack of a complete definition for the term "unconsolidated streamlaid deposits holding streams" in accordance with 30 CFR 701.5. The deficiency is minor because it will be eliminated by regulatory amendment in 3 to 4 months. The operators in the State will not have to submit new permit applications until 2 months after the approval date of the program. The regulatory authority will then have six months to review those permit applications. By the time permit decisions are made, New Mexico will have a new definition in place.

The seventh deficiency, as indicated in Finding 4(o), is the lack of regulations governing a small operators assistance program. The deficiency is minor because the State has only had one application since the inception of the federal interim regulatory program, and that was handled through a memorandum of agreement with OSM. The State does not anticipate applications prior to the date of regulatory amendment, but if it occurs, OSM will assist the State in providing assistance to the small operators.

The eighth deficiency, as indicated in Finding 4(b), concerns the imposition of an additional criterion to the opposed State alternative leaving limited highwall stretches. This limitation would prevent any stretch of highwall from exceeding the length of the cliffs present prior to mining. The deficiency is minor because the State will have completed regulatory amendment prior to the date when any permit application decisions will be made.

The ninth deficiency, as indicated in Findign 4(1)(v), is minor because it is an apparent typographical error in New Mexico regulation 29–12(b) concerning citizen requests for inspections and will be corrected promptly.

The tenth deficiency, as indicated in Finding 4(h), involves a number of inconsistencies in the New Mexico bonding regulations. The deficiency is minor because the federal regulations have recently been amended on August 6, 1980, and the State rules may be consistent with either the August 6, 1980, or March 3, 1979, rules. Approval of bonds is unlikely before new regulations are promulgated. Permit applications need not be filed until two months after program approval. The regulatory authority then has six months in which to act upon the application.

The eleventh deficiency, as indicated in Finding 4(c)(x), is the lack of specific stocking rates for trees and shrubs in the New Mexico regulations. The deficiency is minor because the State will have completed regulatory amendment within 6 months and, in the interim, the State Forester will be using the guidelines submitted on September 10, 1980.

The twelfth deficiency, as indicated in Finding 4(d)(vi), concerns State regulation 11–19(0) governing criteria for permit approval that includes the work "indigenous" in the provision referring to protection of threatened and endangered species. The deficiency is minor because although the present definition omits species that have been transplanted from other continents, it provides full protection to any organism that immigrates to New Mexico under its own power, or was once an inhabitant and has been reestablished by man. The State has agreed to modify its regulation to include all species protected under the Endangered Species Act of 1973.

Given the nature of these deficiencies and their magnitude in relation to all the other provisions of the New Mexico program, as detailed above, the Secretary of the Interior has concluded that they are minor deficiencies. Accordingly, the program is eligible for conditional approval under 30 CFR 732.13(i), because:

1. The deficiencies are of such a size and nature as to render no part of the New Mexico program incomplete since all other aspects of the program meet the requirements of SMCRA and 30 CFR Chapter VII, and these deficiencies, which will be promptly corrected, will not directly affect environmental performance at coal mines;

2. New Mexico has initiated and is actively proceeding with steps to correct the deficiencies; and

3. New Mexico has agreed by letter dated December 2, 1980, to correct the regulation deficiencies by July 1, 1981, and the statutory deficiency by February 28, 1981.

4. Under the authority of Section 505(b) of SMCRA, and in accordance with the position taken by the State of New Mexico, the Secretary has preempted and superceded the State Wildlife Conservation Act to the extent it is inconsistent with provisions of SMCRA related to the Endangered Species Act of 1973.

Accordingly, the Secretary is conditionally approving the New Mexico program. This approval shall terminate if regulations correcting the deficiencies found in the regulations are not enacted by July 1, 1981, or if State legislation correcting the statutory deficiency is not enacted by February 28, 1982.

This conditional approval is effective December 31, 1980. Beginning on that date, the New Mexico Energy and Minerals Department, Mining and Minerals Division, shall be deemed the regulatory authority in New Mexico and all New Mexico surface coal mining and reclamation operations on non-federal and non-Indian lands and all coal exploration on non-federal and non-Indian lands in New Mexico shall be subject to the permanent regulatory program. On non-federal and non-Indian lands in New Mexico the permanent regulatory program consists of the State program approved by the Secretary.

On federal lands, the permanent regulatory program consists of the federal rules made applicable under 30 CFR Chapter VII, Subchapter D—Parts 740–745. In addition, in accordance with Section 523(a) of SMCRA, 30 USC 1273(a), the federal lands program in New Mexico shall include the requirements of the approved New Mexico permanent regulatory program. The Department of Interior and the State of New Mexico will have the opportunity to enter into a cooperative agreement to include the requirements of the approved New Mexico permanent regulatory program.

The Secretary's approval of the New Mexico program relates only to the permanent regulatory program under Title V of SMCRA. The approval does not constitute approval of any provisions related to implementation of Title IV under SMCRA, the abandoned mined lands reclamation program. In accordance with 30 CFR Part 884, New Mexico has submitted a State Reclamation Plan which is the subject of a separate rulemaking. See 45 FR 65626–65628 (October 3, 1980).

Additional Findings

The Secretary has determined that pursuant to Section 702(d) of SMCRA, 30 USC 1292(d), no environmental impact statement need be prepared on this conditional approval.

The Secretary has determined that this document is not a significant rule under E.O. 12044 or 43 CFR Part 14, and no regulatory analysis is being prepared on this conditional approval.

Dated: December 24, 1980.

Joseph W. Gorrell,

Deputy Assistant Secretary of the Interior for Energy and Minerals.

A new Part 30 CFR Part 931, is adopted to read as follows:

PART 931—NEW MEXICO

Sec.
931.1 Scope.
931.10 State regulatory program approval.
931.11 Conditions of the State program approval.
931.12 New Mexico regulations affirmatively disapproved in accordance with court order.
931.13 Preemption of New Mexico laws and regulations.

Authority: Section 503 of Pub. L. 95-87, 91 Stat. 470 (30 U.S.C. 1253).

§ 931.1 Scope.

This part contains all rules applicable only within New Mexico that have been adopted under the Surface Mining Control and Reclamation Act of 1977.

§ 931.10 State regulatory program approval.

The New Mexico State Program, as submitted on February 28, 1980, and amended and clarified on June 11, 1980, August 7, 1980, and September 10, 1980, is conditionally approved, effective December 31, 1980. Beginning on that date, the New Mexico Energy and Minerals Department, Division of Mining and Minerals shall be deemed the regulatory authority in New Mexico for all surface coal mining and reclamation operations and for all exploration operations on non-federal and non-Indian lands. Copies of the approved program together with copies of the letter of the New Mexico Energy and Minerals Department, Division of Mining and Minerals agreeing to the conditions in 30 CFR 931.11, are available at:

(a) Energy and Minerals Department, Division of Mining and Minerals, First Northern Plaza East, Room 200, Santa Fe, New Mexico 87501, Telephone: (505) 827-5451.

(b) Office of Surface Mining, Brooks Towers, 1020 15th Street, Denver, Colorado 80202, Telephone: (303) 837-5421.

(c) Office of Surface Mining, Room 153, Interior South Building, 1951 Constitution Ave., NW., Washington, DC 20240, Telephone: (202) 343-4728.

§ 931.11 Conditions of the State program approval.

The approval of the State program is subject to the following conditions:

(a) The approval found in § 931.10 will terminate on July 1, 1981, unless New Mexico submits to the Secretary by that date copies of fully implemented regulations including the requirements for keyway cuts and rock toe buttresses in accordance with 30 CFR 816.71, or otherwise amends its program to accomplish the same result.

(b) The approval found in § 931.10 will terminate on July 1, 1981, unless New Mexico submits to the Secretary by that date copies of fully implemented procedural regulations for hearings on petitions to designate lands unsuitable in accord with 30 CFR 764.17, or otherwise amends its program to accomplish the same result.

(c) The approval found in § 931.10 will terminate on July 1, 1981, unless New Mexico submits to the Secretary by that date copies of fully implemented regulations which demonstrate that regulation 24-11 has been changed to delete the specific variance for return to approximate original contour on exploration sites in conformance with 30 CFR 815.15, or otherwise amends its program to accomplish the same result.

(d) The approval found in § 931.10 will terminate on July 1, 1981, unless New Mexico submits to the Secretary by that date copies of fully implemented regulations which include the requirements for posting and publishing notice of show cause orders that may be issued in accordance with 30 CFR 843.13 (c) (1)-(3) and (d), or otherwise amends its program to accomplish the same result.

(e) The approval found in § 931.10 will terminate on February 28, 1982, unless New Mexico submits to the Secretary by that date copies of fully implemented regulations containing provisions which are the same or similar to those in 43 CFR 4.1290-4.1296, relating to the award of costs, including attorney's fees, in administrative proceedings, or otherwise amends its program to accomplish the same result.

(f) The approval found in § 931.10 will terminate on July 1, 1981, unless New Mexico submits to the Secretary by that date copies of fully enacted regulations imposing an additional criterion to the proposed State alternative leaving limited highwall stretches which would prevent any stretch of highwall from exceeding the length of the cliffs present prior to mining, or otherwise amends its program to accomplish the same result.

(g) The approval found in § 931.10 will terminate on July 1, 1981, unless New Mexico submits to the Secretary by that date copies of fully implemented regulations containing a complete definition of "unconsolidated streamlaid deposits holding streams" in accord with 30 CFR 705.5, or otherwise amends its program to accomplish the same result.

(h) The approval found in § 931.10 will terminate on July 1, 1981, unless New Mexico submits to the Secretary by that date copies of fully enacted regulations governing a small operators assistance program in accord with 30 CFR 795, or otherwise amends its program to accomplish the same result.

(i) The approval found in 931:10 will terminate on July 1, 1981, unless New Mexico submits to the Secretary by that date copies of fully implemented regulations which correct a typographical error in New Mexico regulation 29-12(b) concerning citizen requests for inspections in accord with 30 CFR 842.12, or otherwise amends its program to accomplish the same result.

(j) Various state rules were adopted based on OSM's proposed bonding regulations, which require changes in order to conform to the now promulgated bonding regulations. Accordingly, the approval found in Section 906.10 will terminate on July 1, 1981, unless New Mexico submits to the Secretary by that date copies of fully implemented regulations containing provisions which modify:

(1) State regulation 1-5 to provide a guarantee of the enforceability of a self bond, consistent with 30 CFR 800.5, or otherwise amends its program to accomplish the same result.

(2) State regulations to provide for the applicability of surface construction activities under subsidence-control measures of mine drainage treatment, consistent with 30 CFR 801.11(a)(1), or otherwise amends its program to the same result.

(3) State regulations 14-16(a) to provide clarification of the period of bond liability covering long-term operations, consistent with 30 CFR 801.13(a), or otherwise amends its program to accomplish the same result.

(4) State regulation 14-16(b) to provide continuous bond coverage terms, consistent with 30 CFR 801.13(b), or otherwise amends its program to accomplish the same result.

(5) State regulation 14-19(a) to provide surety protection provisions, consistent with 30 CFR 801.16(a), or otherwise amends its program to accomplish the same result.

(6) State regulation 14-19(b) to provide bond coverage for any subsequent revegetation on an area previously used as an impoundment, consistent with 30 CFR 801.16(b), or otherwise amends it program to accomplish the same result.

(7) State regulation 15-13(b) to provide for beginning the liability period after the last year of augmentation, consistent with 30 CFR 805.13(b), or

otherwise amends its program to accomplish the same results.

(8) State regulation 15–13(e) to provide a liability period of 5 or 10 years for long-term, intensive agricultural land-use, consistent with 30 CFR 805.13(e), or otherwise amends its program to accomplish the same result.

(9) State regulation 15–13 to provide that if an area is separated, that portions shall be bonded separately and the period of liability shall commence anew, while the period of liability for the remaining areas shall continue in effect without extension, consistent with 30 CFR 805.13(g), or otherwise amends its program to accomplish the same result.

(10) State regulation 16–14 to provide for self-bonding rules, consistent with 30 CFR 806.14, or otherwise amends its program to accomplish the same result.

(k) The approval found in § 931.10 will terminate on July 1, 1981, unless New Mexico submits to the Secretary by that date, copies of fully enacted regulations concerning stacking rates consistent with 30 CFR 816.117, or otherwise amends its program to accomplish the same result.

(l) The approval found in § 931.10 will terminate on July 1, 1981, unless New Mexico submits to the Secretary by that date copies of fully implemented regulations for the production of endangered species in accordance with 30 CFR 786.19 or otherwise amends its program to accomplish the same result.

§ 931.12 New Mexico regulations affirmatively disapproved in accordance with court order.

The following provisions of the New Mexico permanent regulatory program submission are hereby disapproved to the extent indicated in compliance with the February 26, 1980, May 16, 1980, and August 15, 1980 opinions and orders of the U.S. District Court for the District of Columbia in *In Re: Permanent Surface Mining Regulation Litigation* (Civil Action No. 79–1144).

(a) The definition of "mine plan area" in New Mexico regulation 1–5 is disapproved, as is the term "mine plan area" in New Mexico regulation 8–22(b) in accordance with the court's remand of the corresponding provisions in the permanent program regulations.

(b) The definition of "road" in New Mexico regulation 1–5 is disapproved in accordance with the court's remand of the corresponding provision in the permanent program regulations.

(c) New Mexico regulations 2–11(a) and 2–12(e)(1) are disapproved to the extent to which they apply to privately owned places listed on the National Register of Historic Places. The language "or a statutory or regulatory responsibility for" in 2–12(e)(1) is also disapproved. These disapprovals conform to the corresponding suspensions of 30 CFR 761.11(c) and 12(f)(1).

(d) New Mexico regulations 6–11(b) (3) and (6) which require submission of a map and an explanation of the basis for an exploration on another's lands are disapproved in accordance with the court's remand of 30 CFR 776.11(b) (3) and (5).

(e) New Mexico regulations 8–20 (a)–(c) and 9–16 (a) and (b), requiring the submission of certain fish and wildlife information by a permit applicant, are disapproved in accordance with the court's remand of 30 CFR 779.20, 780.16, 783.20 and 784.21.

(f) New Mexico regulations 8–21(a)–(c) are disapproved to the extent to which they require soil survey information on lands on which reconnaissance does not suggest a finding of prime farmlands, in accordance with the court's remand of 30 CFR 779.21 and 783.21.

(g) New Mexico regulation 8–14(a)–(b) is disapproved insofar as it requires geological description of the strata down to and immediately below any coal seam for areas to be affected only by surface operations and facilities where no removal of overburden down to the level of the coal seam will occur, in accordance with the suspension of 30 CFR 783.14(a)(1).

(h) New Mexico regulation 8–25(c), (h) and (i), which requires cross sections, maps and plans, is disapproved in accordance with the court's remand of 30 CFR 783.25 (c), (h) and (i).

(i) New Mexico regulation 10–19(c)(i)(ii) is disapproved to the extent to which it fails to specify negligible farmland interruptions and undeveloped range lands as exclusions from its hydrological requirements dealing with alluvial valley floors, in accordance with the court's remand of 30 CFR 785.19(e)(1)(ii).

(j) New Mexico regulation 17–11(e) is disapproved to the extent to which it fails to provide for citizen access to the mine site in conjunction with an informal conference concerning release of the performance bond, in accordance with the court's remand of 30 CFR 807.11(e).

(k) New Mexico regulation 20–42 (1) and (8) is disapproved to the extent to which it requires runoff from reclaimed land to meet the same effluent limitation as that for actively mined land, in accordance with the court's remand of 30 CFR 816.42 (a) (1) and (7).

(l) New Mexico regulations 20–52(a)(1) and 20–54, dealing with water monitoring and replacement of water, are disapproved insofar as they apply to underground mining operations, in accordance with the court's remand of 30 CFR 817.52(a)(1) and 817.54.

(m) New Mexico regulation 20–95, which requires measures for the control of fugitive dust, is disapproved in accordance with the court's remand of 30 CFR 816.95 and 817.95 for containing measures not specifically related to controlling only that air pollution associated with erosion.

(n) New Mexico regulations 20–150 through 20–176, relating to regulation of roads, are disapproved in accordance with the court's remand of 30 CFR 816.150 through 816.176.

(o) The civil penalty assessment procedures contained in New Mexico regulation 31 is disapproved to the extent they incorporate a point system in accordance with the court's remand of 30 CFR 732.15(b)(7) and 30 CFR 840.13(a).

§ 931.13 Preemption of New Mexico laws and regulations.

Under the authority of Sections 505(b) of SMCRA, 30 U.S.C. 1255(b), and in accordance with the position taken by the State of New Mexico, the following provisions of New Mexico law and regulation are hereby preempted and superseded as they may apply to coal exploration and surface coal mining and reclamation operations:

The State Wildlife Conservation Act (17–2–37 to 17–2–46 NMSA 1978) to the extent it is inconsistent with provisions of SMCRA related to the Endangered Species Act of 1973 (16 USC 1531 *et seq.*).

[FR Doc. 80–40674 Filed 12–30–80; 8:45 am]
BILLING CODE 4310–05–M

DEPARTMENT OF EDUCATION

Office of the Secretary

34 CFR Part 3

Official Seal

AGENCY: Department of Education.

ACTION: Final regulations.

SUMMARY: The Secretary of Education issues final regulations containing a description of the Department of Education (ED) Seal, requirements for officials who have authority to use the Seal, and approved uses of the Seal.

EFFECTIVE DATE: December 31, 1980.

FOR FURTHER INFORMATION CONTACT:

Mr. Henry Husmann, Director, Office of Administrative Resources Management, U.S. Department of Education, Room 3181, 400 Maryland Avenue, SW, Washington, D.C. 20202. Telephone (202) 245–8240.

SUPPLEMENTARY INFORMATION: On May 4, 1980, ED was created under the Department of Education Organization Act (Pub. L. 96-88). Section 425, Part B, of Title IV of the Act requires the Secretary to design an Offical Seal. The Seal has been designed and was approved by the Secretary on March 31, 1980. Judicial notice of the Seal shall be taken.

These regulations describe the Seal and govern its use.

Dated: December 23, 1980.

Shirley M. Hufstedler,

Secretary of Education.

(Catalog of Federal Domestic Assistance No. not applicable)

PART 3—OFFICIAL SEAL

Sec.

3.1 Definitions.
3.2 Description.
3.3 Authority to affix Seal.
3.4 Use of the Seal by persons or organizations outside the Department.

Authority: Pub. L. 96-88; 20 U.S.C. 3472, 3485, unless otherwise noted.

§ 3.1 Definitions.

For the purposes of this part—

(a) "ED" means all organizational units of the Department of Education.

(b) "Embossing Seal" means a display of the form and content of the Official Seal made on a die so that the Seal can be embossed on paper or other media.

(c) "Official Seal" means the original(s) of the Seal showing the exact form, content, and colors.

(d) "Replica" means a copy of the Official Seal displaying the identical form, content, and colors.

(e) "Reproduction" means a copy of the Official Seal displaying the form and content, reproduced in only one color.

(f) "Secretary" means the Secretary of Education.

§ 3.2 Description.

The Official Seal of the Department of Education is described as follows: Standing upon a mound, an oak tree with black trunk and limbs and green foliage in front of a gold rising sun, issuing gold rays on a light blue disc, enclosed by a dark blue border with gold edges bearing the inscription "DEPARTMENT OF EDUCATION" above a star at either side of the words "UNITED STATES OF AMERICA" in smaller letters in the base; letters and stars in white. The Offical Seal of the Department is modified when used in reproductions in black and white and when embossed. As so modified, it appears below.

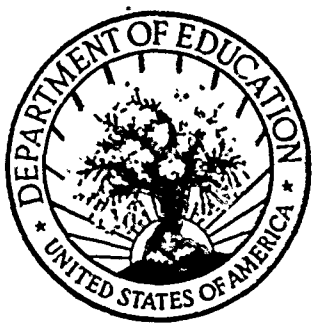

§ 3.3 Authority to affix seal.

The Secretary and the Secretary's designees are authorized to affix the Official Seal, replicas, reproductions, and embossing seals to appropriate documents, certifications, and other material for all purposes as authorized by this section.

(20 U.S.C. 3474)

§ 3.4 Use of the seal by persons or organizations outside the Department.

(a) Use by any person or organization outside of the Department may be made only with the Department's prior written approval.

(b) Requests by any person or organization outside of the Department for permission to use the Seal must be made in writing to the Assistant Secretary for Public Affairs, U.S. Department of Education, 400 Maryland Avenue, SW., Washington, D.C. 20202, and must specify, in detail, the exact use to be made. Any permission granted applies only to the specific use for which it was granted and is not to be construed as permission for any other use.

(c) Replicas may be used only—

(1) For display in or adjacent to ED facilities, in Departmental auditoriums, presentation rooms, hearing rooms, lobbies, and public document rooms;

(2) In offices of senior officials;

(3) For official awards, certificates, medals, and plaques;

(4) For motion picture film, video tape and other audiovisual media prepared by or for ED and attributed thereto;

(5) On official publications which represent the achievements or mission of ED;

(6) In non-ED facilities in connection with events and displays sponsored by ED, and public appearances of the Secretary or other senior ED officials; and

(7) For other purposes as determined by the Director of the Office of Administrative Resources Management;

(d) Reproductions may be used only—

(1) On ED letterhead stationery;

(2) On official ED identification cards, security, and other approved credentials;

(3) On business cards for ED employees;

(4) On official ED signs;

(5) On official publications or graphics issued by and attributed to ED, or joint statements of ED with one or more other Federal agencies, State or local governments, or foreign governments;

(6) On official awards, certificates, and medals;

(7) On motion picture film, video tape, and other audiovisual media prepard by or for ED and attributed thereto; and

(8) For other purposes as determined by the Director of the Office of Administrative Resources Management.

(e) Embossing seals may be used only—

(1) On ED legal documents, including interagency or intergovernmental agreements, agreements with State or local governments, foreign patent applications, certification(s) of true copies, and similar documents;

(2) On official awards and certificates; and

(3) For other purposes as determined by the General Counsel or Assistant Secretary for Management.

(f) Falsely making, forging, counterfeiting, mutilating, or altering the Official Seal, replicas, reproductions, or embossing seals, or knowingly using or possessing with fraudulent intent and altered official seal, replica, reproduction or embossing seal is punishable under 18 U.S.C. 506.

(g) Any person using the Official Seal, replicas, reproductions, or embossing seals in a manner inconsistent with the provisions of this part is subject to the provisions of 18 U.S.C. 1017, which states penalties for the wrongful use of an Official Seal, and to other provisions of law as applicable.

[FR Doc. 80-41323 Filed 12-30-80; 8:45 am]

BILLING CODE 4000-01-M

ENVIRONMENTAL PROTECTION AGENCY

40 CFR Part 180

[OPP-260040; PH FRL 1716-2]

Fenthion; Tolerances and Exemptions From Tolerances for Pesticide Chemicals in or on Raw Agricultural Commodities

AGENCY: Environmental Protection Agency (EPA).

ACTION: Final rule.

SUMMARY: This rule editorially amends 40 CFR 180.214 by re-establishing a tolerance for residues of the insecticide fenthion (*O-O*-dimethyl *O*-[4-(methylthio)-*m*-tolyl] phosphorothioate) and its cholinesterase-inhibiting metabolites in or on the raw agricultural commodities alfalfa and grass at 5 parts per million (ppm). The regulation was established in the Federal Register of December 31, 1969 (34 FR 20425); however, the tolerance was inadvertently omitted from the Code of Federal Regulations (CFR).

EFFECTIVE DATE: Effective on December 31, 1980.

ADDRESSES: Written objections may be submitted to the: Hearing Clerk, Environmental Protection Agency, Rm. M-3708 (A-110), 401 M St., SW., Washington, D.C. 20460.

FOR FURTHER INFORMATION CONTACT: George T. LaRocca, Product Manager (PM) 15, Registration Division (TS-767), Office of Pesticide Programs, Environmental Protection Agency, Rm. E-329, 401 M St., SW., Washington, D.C. 20460, (202-426-9490).

SUPPLEMENTARY INFORMATION: The Food and Drug Administration issued a notice that published in the Federal Register of December 31, 1969 (34 FR 20425), that established tolerances for the insecticide fenthion (*O,O*-dimethyl *O*-[4-(methylthio)-*m*-tolyl] phosphorothioate) and its cholinesterase-inhibiting metabolites in or on the raw agricultural commodities alfalfa hay and grass hay at 18 parts per million (ppm); alfalfa and grass at 5 ppm; and milk at 0.01 ppm (negligible residues).

The tolerance for alfalfa and grass was inadvertently omitted from the Code of Federal Regulations. This rule re-establishes the tolerance as set forth below.

Any person adversely affected by this regulation may, on or before January 30, 1981, file written objections with the Hearing Clerk, EPA, Rm. M-3708, (A-110), 401 M St. SW., Washington, D.C. 20460. Such objections should be submitted in quintuplicate and specify the provisions of the regulation deemed objectionable and the grounds for the objections. If a hearing is requested the objections must state the issues for the hearing. A hearing will be granted if the objections are legally sufficient to justify the relief sought.

Note.—Under Executive Order 12044, EPA is required to judge whether a regulation is "significant" and therefore subject to the procedural requirements of the Order or whether it may follow other specialized development procedures. EPA labels these other regulations "specialized." This regulation has been reviewed, and it has been determined that it is a specialized regulation not subject to the procedural requirements of the Executive Order 12044.

Effective on: December 31, 1980.

(Sec. 408(e), 68 Stat. 514; (21 U.S.C. 346a(e)))

Dated: December 18, 1980.

Robert V. Brown,

Acting Deputy Assistant Administrator for Pesticide Programs.

Therefore, Subpart C of 40 CFR Part 180 is amended by revising § 180.214 to read as follows:

§ 180.214 Fenthion; tolerances for residues.

Tolerances are established for residues of the insecticide fenthion (*O,O*-dimethyl *O*-[4-(methylthio)-*m*-tolyl] phosphorothioate) and its cholinesterase-inhibiting metabolites in or on the following raw agricultural commodities:

Commodity	Parts per million
Alfalfa	5
Alfalfa, hay	18
Cattle, fat	0.1
Cattle, meat	0.1
Cattle (mbyp)	0.1
Grass	5
Grass, hay	18
Hogs, fat	0.1
Hogs, meat	0.1
Hogs (mbyp)	0.1
Milk	0.01(N)
Poultry, fat	0.1
Poultry, meat	0.1
Poultry (mbyp)	0.1
Rice	0.1
Rice, straw	0.5

[FR Doc. 80-40645 Filed 12-30-80; 8:45 am]

BILLING CODE 6560-32-M

40 CFR Part 180

[PP 9E2224/R282; PH-FRL 1716-3]

Trifluralin; Tolerances and Exemptions From Tolerances for Pesticide Chemicals in or on Raw Agricultural Commodities

AGENCY: Environmental Protection Agency (EPA).

ACTION: Final rule.

SUMMARY: This rule establishes a tolerance for the herbicide and plant growth regulator trifluralin in or on upland cress at 0.05 part per million (ppm). This regulation was requested by the Interregional Research Project No. 4 (IR-4). This regulation will establish the maximum permissible level for residues of trifluralin on upland cress.

EFFECTIVE DATE: Effective on December 31, 1980.

ADDRESS: Written objections may be submitted to: Clinton Fletcher, Registration Division (TS-767), Office of Pesticide Programs, Environmental Protection Agency, Rm. E-124, 401 M St., SW., Washington, D.C. 20460.

FOR FURTHER INFORMATION CONTACT: Clinton Fletcher, Registration Division (TS-767), Office of Pesticide Programs, Environmental Protection Agency, Rm. E-124, 401 M St., SW., Washington, D.C. 20460, (202-426-0223).

SUPPLEMENTARY INFORMATION: EPA issued a notice that published in the Federal Register of September 4, 1980 (45 FR 58600) that the Interregional Research Project No. 4 (IR-4), New Jersey Agricultural Experiment Station, PO Box 231, Rutgers University, New Brunswick, NJ 08903, had submitted pesticide petition number 9E2224 to the EPA on behalf of the IR-4 Technical Committee and Agricultural Experiment Station of Tennessee.

The petition requested that the Administrator, pursuant to section 408(e) of the Federal Food, Drug, and Cosmetic Act, establish a tolerance for the herbicide and plant growth regulator trifluralin in or on the raw agricultural commodity upland cress at 0.05 ppm.

The data submitted in the petition and all other relevant material have been evaluated. The pesticide is considered useful for the purpose for which the tolerance is sought. The toxicology data considered in support of the proposed tolerance of 0.05 part per million (ppm) in or on upland cress were 2 two-year rat feeding studies with no observed effect levels (NOEL) of 2,000 ppm; 2 two-year and a three-year dog feeding studies with NOEL's of 400 ppm; a dog breeding study with a NOEL of 400 ppm; a 4-generation rat reproduction study with a NOEL of 200 ppm; a continuous breeding rat study with a NOEL of 2,000 ppm.

Oncogenicity tests conducted by the National Cancer Institute (NCI) with trifluralin technical chemical in rats and mice indicated the chemical is not oncogenic in rats nor in male mice under the terms of the bioassay. Hepatocellular carcinomas and

alveolar/bronchiolar adenomas were observed in female mice at a statistically significant incidence when compared to controls, but the incidence appeared to be possibly related to the presence of a dipropylnitrosamine contaminant. *N*-nitroso-di-n-propylamine (NDPA) was found in the trifluralin used in the test at concentrations of 84–88 ppm.

A preliminary report of a recently submitted chronic toxicity/oncogenicity study shows an increase in tumors of the urinary tract in male and female rats treated with trifluralin. However, the theoretical maximum residue contribution (TMRC) from the proposed use is only 2×10^{-5}mg/day/1.5 kg daily diet. This minute increase is considered negligible in comparison with the current estimated TMRC of 0.0429 mg/day/1.5 kg daily diet. In addition, the proposed use does not change the percentage of the acceptable daily intake (ADI) contributed by currently existing tolerances.

The ADI for trifluralin is calculated to be 0.1 mg/kg of body weight (bw)/day with regard to chronic effects other than oncogenicity and based on the NOEL of 400 ppm in the 3 long-term dog feeding studies and using a 100 fold safety factor. The maximum permitted intake (MPI) for a 60 kg person is calculated to be 6 mg/day. Tolerances have previously been established for a variety of commodities, including the crop grouping "leafy vegetables," and range from 0.05 ppm to 2.0 ppm. These tolerances utilize 0.72 percent of the ADI.

On August 30, 1979, the agency published in the Federal Register (44 FR 50911) a notice of determination and availability of a position document concerning trifluralin. After extensive review, the agency determined that the benefits outweighed the risks for all uses if the formulated products contained less than 1 ppm of NDPA. However, the agency will re-evaluate all the existing tolerances for trifluralin when the final report and validation audit of the laboratory records on all the chronic toxicity/oncogenicity studies are available.

Based on the above information considered by the agency and the insignificance of upland cress in the diet, it is concluded that the tolerance of 0.05 ppm in or on upland cress would protect the public health. In light of the chronic toxicity oncogenicity studies, the agency considers the cancer risk from dietary exposure of trifluralin-treated upland cress to be insignificant (negligible) since the ADI and TMRC are not affected by the proposed use, since upland cress can be substituted in the diet for other leafy vegetables for which a tolerance currently exist. Therefore, 40 CFR Part 180 is amended as set forth below.

Any person adversely affected by this regulation may, on or before January 30, 1981, file written objections with the Hearing Clerk, EPA, Rm. M-3708 (A-110), 401 M. St., SW., Washington, D.C. 20460. Such objections should be submitted in quintuplicate and specify the provisions of the regulation deemed objectionable and the grounds for the objections. If a hearing is requested, the objections must state the issues for the hearing. If a hearing is granted, the objections must be supported by grounds legally sufficient to justify the relief sought.

Note.—Under Executive Order 12044, EPA is required to judge whether a regulation is "significant" and therefore subject to the procedural requirements of the Order or whether it may follow other specialized development procedures. EPA labels these other regulations "specialized." This regulation has been reviewed, and it has been determined that it is a specialized regulation not subject to the procedural requirements of Executive Order 12044.

Effective date: December 31, 1980.

(Sec. 408(e), 68 Stat. 514 (21 U.S.C. 346a(e)))

Dated: December 18, 1980.

Robert V. Brown,

Acting Deputy Assistant Administrator for Pesticide Programs.

Therefore, Subpart C of 40 CFR Part 180 is amended by alphabetically inserting "upland cress" in the table under § 180.207 to read as follows:

§ 180.207 Trifluralin; tolerances for residues.

* * * * *

Commodity	Parts per million
* * * * *	
Upland Cress	0.05
* * * * *	

[FR Doc. 80-40640 Filed 12-30-80; 8:45 am]

BILLING CODE 6560-32-M

GENERAL SERVICES ADMINISTRATION

41 CFR Part 101-20

[FPMR Amendment D-78]

Federal Property Management Regulations; Management of Buildings and Grounds; Accident and Fire Prevention Standards

AGENCY: General Services Administration.

ACTION: Final rule.

SUMMARY: The General Services Administration (GSA) is amending its regulations to update certain provisions of the accident and fire prevention standards. The proposed changes require that GSA ensure that space is consistent with Occupational Safety and Health Act (OSHA) standards, provide a procedure for processing reports of hazardous conditions, and for resolving conflicting complaints that result from safety and health inspections by GSA and occupant agency inspection personnel.

EFFECTIVE DATE: December 31, 1980.

FOR FURTHER INFORMATION CONTACT: Mr. Craig Schilder, Chief, Safety Management Branch, Accident and Fire Prevention Division (202-566-0961).

SUPPLEMENTARY INFORMATION: The General Services Administration has determined that this regulation will not impose unnecessary burdens on the economy or on individuals and, therefore, is not significant for the purposes of Executive Order 12044.

1. The table of contents for Part 101-20 is amended to recaption and revise two entries and add one entry, as follows:

101-20.109-3 Responsibilities of agencies.
101-20.109-11 Accident prevention and fire protection activities of occupant agencies.
101-20.109-12 Correction of hazardous conditions.

Subpart 101-20.1—Building Operations, Maintenance, Protection, and Alterations.

2. Section 101-20.109-1 is revised to read as follows:

§ 101-20.109-1 Policy.

It is the policy of GSA that:

(a) Standards for space will equal those promulgated under the Occupational Safety and Health Act (OSHA) of 1970 (Public Law 91-596); Executive Order 12196; and 29 CFR 1960, Subpart C—Agency Occupational Safety and Health Standards.

(b) The safety and health of occupants and visitors will not be endangered by exposure to unnecessary risks and intolerable conditions.

(c) Safeguards will be provided to allow emergency forces to accomplish their missions without undue danger of entrapment.

(d) Fire-protection and other safety features will be provided to minimize exposure to the community to unnecessary risks or undue danger.

(e) Safeguards that minimize personal harm, property damage, or impairment

of GSA or agency operations will be provided according to the level of risk which includes the number of persons involved, the value of the property, and the importance of the Federal activity.

3. Section 101-20.109-3 is recaptioned and revised to read as follows:

§ 101-20.109-3 Responsibilities of agencies.

Accidents involving personal injury or property damage to buildings and grounds for which GSA is responsible will be reported immediately to the appropriate GSA buildings manager. Each occupant agency shall ensure that:

(a) Operations and activities and their use in GSA-assigned space conform to the policies of § 101-20.109-1;

(b) All reasonable precautions are taken to avoid accidental injuries, work related illnesses, fires, and property damage; and

(c) A safety, health, and fire protection liaison is appointed with full authority and responsibility to represent the occupant agency management with the GSA buildings manager.

4. Section 101-20.109-11 is amended by revising its caption and paragraph (a) to read as follows:

§ 101-20.109-11 Accident prevention and fire protection activities of occupant agencies.

(a) Periodic inspections, in accordance with Executive Order 12196 and 29 CFR 1960, are required to be conducted by the occupant agency for its operations and activities to include their assigned space within GSA buildings or grounds. All substandard building conditions shall be documented and a copy of the documentation shall be provided to the GSA buildings manager not later than 10 workdays after identification of the substandard condition. These inspections do not relieve GSA of its responsibilities for these areas, nor do inspections by GSA or others relieve occupant agencies of their responsibilities for maintaining full knowledge of conditions.

* * * * *

5. Section 101-20.109-12 is added to read as follows:

§ 101-20.109-12 Correction of hazardous conditions.

(a) Conditions within the occupant agency's responsibility to correct, which affect GSA buildings and grounds and could affect any GSA employees or other agency employees in the performance of their responsibilities, shall be corrected within 30 workdays in accordance with 20 CFR 1960 or established occupant agency program requirements, whichever is more restrictive. An abatement plan shall be prepared when corrective actions require more than 30 calendar days. This plan shall contain an explanation of why the corrections are delayed, a proposed timetable for the abatement, and a summary of steps being taken in the interim to protect GSA and other agency personnel from injury or illness and GSA buildings and grounds from damage by the unsafe or unhealthy working condition. The occupant agency's liaison shall send a copy of the hazard correction plan to the GSA buildings manager. (Usually this plan will be the same as required by 29 CFR 1960). If the abatement will take more than 60 workdays, a copy of the plan shall also be provided by the GSA buildings manager to the appropriate GSA regional Accident and Fire Prevention Branch. Occupant agencies may correct hazardous conditions in accordance with FPMR 101-20.105, which establishes authority for agencies to procure special alteration services of not more than $1,000.

(b) Conditions considered to be within the scope of GSA's responsibility to correct which are identified in occupant agency's assigned space, shall be forwarded to the GSA buildings manager for action. The resolution steps are:

(1) Identification;
(2) Documentation;
(3) Presentation;
(4) Investigation;
(5) Determination; and
(6) Resolution.

(c) To correct a condition considered to be within the scope of GSA's responsibility, six basic steps shall be taken: The occupant agency shall identify, document, and present the problem to the GSA buildings manager, after which GSA will investigate, determine, and resolve the problem. Identification of these conditions may be by an occupant agency employee or by an occupant agency safety and health and fire protection specialist.

When an imminently dangerous situation exists, as defined by 29 CFR 1960.28, a telephone call from the occupant agency's liaison to the GSA buildings manager shall constitute the occupant agency's identification, documentation, and presentation of the problem to GSA. Otherwise, a report shall document the hazardous condition and cite references to specific OSHA standards violated. Documentation should include inspection reports, photographs, sketches or drawings for a safety problem, and an industrial hygiene survey report for health problems. The OSHA Form No. 7 (complaint) may be used as part of the documentation. The occupant agency's liaison shall determine that there are reasonable grounds to believe that an unsafe or unhealthful condition exists before presenting the situation to the GSA buildings manager.

(d) GSA action:

(1) Upon a documented agency request, GSA will investigate reports of unsafe or unhealthful conditions. This investigation, when requiring an onsite inspection, shall be completed within 24 hours for imminent danger situations, 3 working days for potentially serious conditions, and 20 working days for other safety and health conditions.

(2) The GSA buildings manager will determine a plan of action to resolve the problems and inform the agency within 5 working days after the investigation.

(3) Whenever possible, GSA shall resolve the condition within 20 working days after determining the plan of action and shall inform the agency when resolution has been completed.

(4) When resolution will take longer than 30 working days, the GSA buildings manager shall prepare and submit to the occupant agency liaison an abatement plan.

(5) GSA shall give priority in the allocation of resources for prompt abatement of conditions.

(6) The abatement plan shall set forth a timetable for abatement and a summary of interim steps to protect employees. The plan shall include the: Location of the hazard, hazard assessment (probability of occurrence and potential severity), discussion of the hazard, corrective action to be taken, specific reference to OSHA standard(s) violated, justification for deferring corrective action, proposed timetable, interim corrrective action, and the appropriate management signature.

(d) Actions by the buildings manager or other regional management personnel that do not resolve the problem to the satisfaction of the occupant agency's management may be formally presented to the appropriate GSA Regional Administrator by the occupant agency's regional, district, or equivalent management.

(e) Unsatisfactory resolutions by GSA regional management may be formally presented to the Administrator of GSA, Washington, DC 20405, by the agency head or an authorized designee.

(f) Hazardous conditions observed in other than the occupant agency's assigned space should be brought to the attention of the responsible agency's occupant liaison for required action.

(Sec. 205(c), 63 Stat. 390; 40 U.S.C. 486(c))

Dated: December 18, 1980.

R. G. Freeman III,

Administrator of General Services.

[FR Doc. 80-40593 Filed 12-30-80; 8:45 am]

BILLING CODE 6820-23-M

DEPARTMENT OF THE INTERIOR

Water and Power Resources Service

43 CFR Part 428

Sale of Replacement Farm Units to Teton Flood Victims

AGENCY: Water and Power Resources Service, Interior.

ACTION: Final rule.

SUMMARY: The Department of the Interior is amending its regulations relating to the sale of replacement farm units to Teton flood victims. The first Environmental Assessment (EA) on the proposed sale of 5,955 acres of Idaho National Energy Laboratory land to victims of the Teton flood was completed on January 18, 1979. The proposed sale was authorized by the provision of Public Law 95-238 which was codified into 43 CFR 428. Fewer farmers than expected qualified for farm units under the regulations. Also, the proposed wildlife mitigation plan was modified following the initial EA. These changes made it necessary to modify the original EA. Preparation of the environmental documents has delayed the sale of the replacement farm units and therefore a change in the regulations is necessary to reflect the delay.

DATE: December 31, 1980.

FOR FURTHER INFORMATION CONTACT: Mr. L. David Williamson, Jr., Senior Staff Assistant, Land Resources Management, Operation and Maintenance Policy Staff, telephone-(202) 343-5204.

SUPPLEMENTARY INFORMATION: On June 5, 1976, the Teton Dam in southeastern Idaho failed and flooded 185 square miles of flat, agricultural lands. Public Law 95-238 was passed by Congress on February 25, 1978. This Act authorized the Federal Government to sell up to 5,955 acres of the Idaho National Energy Laboratory (INEL) lands to Teton flood victims whose lands were damaged beyond repair by the failure of Teton Dam. The Water and Power Resources Service, Department of the Interior, developed regulations codified in 43 CFR 428 to define qualified farmers and to establish procedures and time tables for the sale of these lands. Subsequent changes in the number of qualified farmers reduced the acres to be sold and changes in the wildlife mitigation plan have necessitated changes in the Environmental Assessment. The Environmental Assessment and the Finding of No Significant Impact have now been completed. Preparation of the environmental documents has delayed the date of the sale of the INEL lands to the qualifying farmers and requires that 43 CFR 428.6 be modified to reflect this delay. The proposed change to 43 CFR 428.6 was printed in the Federal Register Vol. 45 No. 54 for Tuesday, March 18, 1980, page 17165-17166, and comments were solicited. No. comments were received; therefore, the proposed modification to 43 CFR 428.6 is final as proposed.

The principal author of this document is Mr. Terence G. Cooper, Staff Assistant for Land Resources Management, Operations and Maintenance Policy Staff, Water and Power Resources Service.

The Department of the Interior has determined that this document is not a significant rule and does not require a regulatory analysis under Executive Order 12044 and 43 CFR Part 14.

Dated: December 22, 1980.

Cecil D. Andrus,

Secretary of the Interior and Returned.

Accordingly, 43 CFR Part 428 is amended by revising § 428.6(a) to read as follows:

§ 428.6 Sale of replacement farm units.

(a) Replacement farm units shall be made available for purchase by qualifying farmers approximately every 6 months starting after final determinations have been made identifying the qualified farmers; and within approximately 120 days after compliance with applicable Federal laws and regulations, including the National Environmental Policy Act of 1969, provided, however, that sales will be limited to the land made available for this program pursuant to the act of February 25, 1978, (92 Stat. 76) and described in § 428.4(e) hereof. The Secretary shall notify all qualifying farmers, in writing, of the date the first replacement farm units will be offered for sale and will also give notice of the closing date on which the qualifying farmer may file an intent to purchase a replacement farm unit from those offered for sale during the initial sale period. No subsequent notice will be provided; however, each qualifying farmer may file an intent to purchase at any time after the initial sale provided that no filings may be made after July 1, 1982.

* * * * *

[FR Doc. 80-40616 Filed 12-30-80; 8:45 am]

BILLING CODE 4310-03-M

Bureau of Land Management

43 CFR Public Land Order 5796

[NM-37654]

New Mexico; Revocation of Public Land Order No. 3796

AGENCY: Bureau of Land Management, Interior.

ACTION: Public land order.

SUMMARY: This order will revoke a withdrawal pertaining to 23,816.48 acres of public lands and, to the extent provided, open the lands to the operation of the public land laws generally.

EFFECTIVE DATE: January 27, 1981.

FOR FURTHER INFORMATION CONTACT: Stella V. Gonzales, New Mexico State Office 505-988-6211.

By virtue of the authority contained in Section 204 of the Federal Land Policy and Management Act of 1976, 90 Stat. 2751; 43 U.S.C. 1714, it is ordered as follows:

1. Public Land Order No. 3796 of August 17, 1965, which withdrew the following described public lands, administered by the Bureau of Land Management, from entry under the agricultural public land laws, for the protection of the underground water supply in the Hueco-Bolson Area, is hereby revoked:

New Mexico Principal Meridian

T. 26 S., R. 4 E.,
- Sec. 1, NE¼, S½NW¼, SW¼, and W½SE¼;
- Secs. 3 to 11, inclusive;
- Sec. 12, W½NE¼, NW¼, N½SW¼, SE¼SW¼, and SE¼;
- Secs. 13 to 15, inclusive;
- Secs. 17 to 23, inclusive;
- Sec. 24, N½NE¼, SW¼NE¼, NW¼, N½SW¼, N½SE¼, and SE¼SE¼;
- Sec. 25, NE¼NE¼;
- Sec. 27, N½, SW¼, and N½SE¼;
- Secs. 28 to 30, inclusive;
- Sec. 31, lot 6 and E½NE¼;
- Sec. 33, lots 1 to 4, inclusive, and N½;
- Sec. 34, lots 1 to 4, inclusive, and N½;
- Sec. 35, lots 1 to 4, inclusive, NW¼NE¼, S½NE¼, and NW¼.

T. 26 S., R. 5 E.,
- Sec. 5, lot 1;
- Sec. 6, lot 7;
- Secs. 10 to 12, inclusive;
- Sec. 13, N½;
- Sec. 14, N½, SW¼, N½SE¼, and SW¼SE¼.

T. 26 S., R. 6 E.,
Sec. 1, NE¼SE¼, that portion lying west of the McGregor Range (PLO No. 1470), and NW¼SE¼;
Sec. 7. S½NE¼, SE¼NW¼, E½SW¼, and SE¼;
Sec. 8, S½NE¼, W½, and SE¼;
Sec. 9, S½N½ and S½;
Sec. 10, S½N½, NE¼SW¼, and SE¼;
Sec. 17;
Sec. 18, E½ and E½W½;
Sec. 19, E½ and E½W½;
Sec. 20, W½W½;
Sec. 29, N½NE¼ and E½NW¼.

The area described aggregates 23,900.59 acres in Dona Ana and Otero Counties of which 84.11 acres are privately owned.

2. At 10 a.m. on January 27, 1981, all the lands except lot 1 sec. 5 and lot 7 sec. 6, T. 26 S., R. 5 E., (private lands), shall be open to operation of the public land laws generally, subject to valid existing rights, the provisions of existing withdrawals, existing classification decisions and the requirements of applicable law. All valid applications received at or prior to 10 a.m. on January 27, 1981, shall be considered as simultaneously filed at that time. Those received thereafter shall be considered in the order of filing.

3. The lands have been and continue to be open to applications and offers under the mineral leasing laws and to location under the United States mining laws.

Inquiries concerning the lands should be addressed to the Chief, Division of Technical Services, Bureau of Land Management, P.O. Box 1449, Santa Fe, New Mexico 87501.

Guy R. Martin,
Assistant Secretary of the Interior.
December 18, 1980.
[FR Doc. 80-40604 Filed 12-30-80; 8:45 am]
BILLING CODE 4310-84-M

Fish and Wildlife Service

50 CFR Part 14

Excepting Certain Persons From the Import/Export License Requirement

AGENCY: Fish and Wildlife Service, Interior.

ACTION: Final rule.

SUMMARY: The Service amends the import/export license requirement found in 50 CFR Part 14 to except any person from the license requirement if the value of the wildlife that person imports and exports during a calendar year totals less than $25,000. This action should relieve the disproportionately burdensome demands that the import/export license requirement would impose on small entities, particularly small businesses and individuals who only occasionally import or export wildlife for gain or profit.

EFFECTIVE DATE: December 31, 1980.

FOR FURTHER INFORMATION, CONTACT: John T. Webb, Division of Law Enforcement, U.S. Fish and Wildlife Service, Suite 300, 1375 K Street, NW, Washington, D.C. 20005, telephone (202) 343-9242.

SUPPLEMENTARY INFORMATION:

Background

On August 25, 1980 (45 FR 56668), the Service published final rules revising 50 CFR Part 14 (Importation, Exportation, and Transportation of Wildlife) to implement provisions of a number of wildlife laws enforced by the Service. As part of that rulemaking and under authority of the Endangered Species Act of 1973 (ESA), an import/export license requirement was imposed on any person who engages in business as an importer or exporter of fish or wildlife unless that person imports or exports certain excepted wildlife or falls within one of the categories of persons excepted from the requirement by the rules. Under section 9(d) of the ESA [16 U.S.C. 1538(d)] it is illegal for any person to engage in business as an importer or exporter of fish or wildlife (other than certain shellfish or fishery products) without first having obtained permission from the Secretary of the Interior. On March 24, 1974 (39 FR 8357), the Service published a notice granting temporary permission to all persons needing it. To replace the temporary permission the Service proposed an import/export license on March 27, 1978 (43 FR 12830). After two comment periods and two public hearings the Service retained the license requirement with certain exceptions in the final rules. The license requirement goes into effect on January 1, 1981.

Licensees must: (1) pay $50 for a license, (2) keep certain records and retain them for five years, (3) allow Service inspection of records and inventories of imported wildlife, and (4) file requested reports. Certain persons excepted from the license requirement by 50 CFR 14.92(b) must still: (1) keep records which fully and correctly disclose each importation or exportation of wildlife by them (2) keep records which fully and correctly disclose the subsequent disposition by them of the imported or exported wildlife, and (3) allow Service inspection of records and inventories of imported wildlife.

Purpose of and Need for the Rule

The Service has received considerable comment that the license requirement would impose disproportionately burdensome demands on small entities, particularly small businesses and individuals who only occasionally import or export fish or wildlife for gain or profit. The license fee and records which must be kept would disrupt the normal business practice of these small entities by requiring them to: (1) adopt new and more costly business practices to comply with the license requirement, or (2) hire additional help in some instances to comply with the more detailed recordkeeping and possible reporting requirements of the license.

Description of the Final Rule

Any person who engages in business as an importer or exporter of fish or wildlife does not have to obtain an import/export license if the value of the wildlife that person imports and exports during a calendar year totals less than $25,000. This exception applies to all qualified persons who engage in business as importers or exporters of fish or wildlife, including those persons identified by 50 CFR 14.91(c). The value the Service will use to determine whether the excepted dollar value has been exceeded is the value declared on the Declaration for Importation or Exportation of Fish or Wildlife (Form 3-177).

Persons Who May Qualify for the Exception

Any person who may qualify for the exception during the next calendar year and has submitted an application for an import/export license to the Service should contact the Special Agent in Charge to whom the application was submitted as soon as possible.

National Environmental Policy Act

The Service prepared an environmental assessment on the final rules published on August 25, 1980 (45 FR 56668), which included a discussion of the implementation of section 9(d) of the ESA. That assessment forms the basis for a finding that this final rule is not a major Federal action which would significantly affect the quality of the human environment within the meaning of section 102(2)(C) of the National Environmental Policy Act of 1969.

The final assessment is on file in the Service's Division of Law Enforcement, 1375 K Street, N.W., Washington, D.C., and may be examined during regular business hours.

Statement of Basis for Omitting Notice and Comment

Pursuant to 5 U.S.C. 553(b)(B) and 43 CFR 14.5(b)(3), the Service for good cause finds that notice and public procedure on this amendment are impracticable, unnecessary, and contrary to the public interest. The import/export license requirement takes effect on January 1, 1981. 50 CFR 14.91(a); 45 FR 56678. Persons not excepted from the license requirement must insure that a complete application, including the $50 fee, is received by the Service before that date. 50 CFR 13.11(d), 14.93(c); 45 FR 56673, 56678. The purpose of this amendment is to except small entities from the excessive burdens that would result from the application, recordkeeping, and possible reporting provisions of the license requirement. If notice and an opportunity for public comment were provided for this amendment, it would not take effect before January 1, 1981, and the small entities covered by this exception would be forced to comply, within a very limited amount of time, with application and fee requirements. Thus, the very purpose of this amendment would be defeated if notice and an opportunity for public comment on it were provided.

Early in 1981 the Service intends to publish a document in the Federal Register which will provide the public with an opportunity to comment on all aspects of 50 CFR Part 14, including the import/export license requirement.

Effective Date of This Rule

Because this rule is a substantive rule which grants or recognizes an exemption and relieves a restriction, the Service has determined to make it effective immediately under authority of 5 U.S.C. 553(d)(1) and 43 CFR 14.5(b)(5).

Classification and Regulatory Analysis

The Department has determined that this document is not a significant rule and does not require preparation of a regulatory analysis under Executive Order 12044 and 43 CFR Part 14.

Regulations Promulgation

For the reasons set out in the preamble, Part 14, Subchapter B, Chapter I of Title 50, *Code of Federal Regulations,* is amended as set forth below.

PART 14—IMPORTATION, EXPORTATION, AND TRANSPORTATION OF WILDLIFE

1. The authority citation for Part 14 is revised to read as follows:

Authority: Lacey Act (18 U.S.C. 42–44); Endangered Species Act of 1973 (16 U.S.C. 1538(d)–(f), 1540(f)); Marine Mammal Protection Act of 1972 (16 U.S.C. 1382); Migratory Bird Treaty Act (16 U.S.C. 704, 712); Act of August 31, 1951, Ch. 376, Title 5, sec. 501 (31 U.S.C. 483a); Black Bass Act (16 U.S.C. 852c).

2. A new paragraph (6) is added to § 14.92(b) to read as follows:

§ 14.92 Exceptions to license requirement.

* * * * *

(b) * * *

(6) Any person if the value [as declared on the Declaration for Importation or Exportation of Fish or Wildlife (Form 3–177)] of the wildlife that person imports and exports during a calendar year totals less than $25,000.

Dated: December 19, 1980.

Lynn A. Greenwalt,

Director, Fish and Wildlife Service.

[FR Doc. 80-40617 Filed 12-30-80; 8:45 am]

BILLING CODE 4310-55-M

DEPARTMENT OF COMMERCE

National Oceanic and Atmospheric Administration

50 CFR Part 611

Foreign Fishing Regulations; Payment of Fees

AGENCY: National Oceanic and Atmospheric Administration (NOAA)/ Commerce.

ACTION: Final rule.

SUMMARY: NOAA sets the surcharge on foreign fishing fees at 20 percent; establishes new fee collection procedures; and provides a format for the effort plan. These actions will facilitate the payment of fees and submission of effort plans.

EFFECTIVE DATES: January 1, 1981, for the amended fee collection procedures and 20 percent fee surcharge; January 30, 1981, for the effort plan format.

FOR FURTHER INFORMATION CONTACT: Denton R. Moore, Chief, Permits and Regulations Division, F/CM7, National Marine Fisheries Service, Washington, D.C. 20235, Telephone: (202) 634–7432.

SUPPLEMENTARY INFORMATION: A proposed rulemaking to establish a new foreign fishing fee collection procedure, to raise the surcharge to 20 percent, and to provide a format for the effort plan was published on November 13, 1980 (45 FR 74948). A new poundage fee schedule, proposed in the same publication, will be finalized at a later date but before January 1, 1981. Comments were invited for 30 days, ending December 15, 1980. A public hearing on the proposal was held in Washington, D.C., on December 8, 1980. The comments and action being taken on the rules finalized in this publication are summarized below.

I. Fishing Vessel and Gear Damage Compensation Fund

No comments were received on raising the initial surcharge collected from 10 percent to the full 20 percent authorized by the Fishermen's Protective Act, as amended. Several commenters spoke against the concept of the Fund; however, such comments are beyond the scope of this rulemaking. One commenter asked NOAA to consider the increased surcharge when setting the 1981 poundage fee. This will be done. Another commenter said that foreign vessel owners are entitled to the information on how the Fund is disbursed. This information may be made available under a Freedom of Information Act request. Foreign nations are advised that the surcharge portion of the letter of credit or cash payment for the first quarter (see part III, below) will be drawn in early January. NOAA must take this action to recapitalize the Fund.

II. Effort Plan

One comment was submitted on the effort plan format. The commenter asked that anticipated foreign fishing in the Pacific billfish and sharks fishery be specified by geographical area. This comment is incorporated into the final regulations. The commenter also requested that effort plans be required when permits are submitted. NOAA feels it cannot do so, since the Federal government requests countries to submit permit applications in October for the next calendar year. The allocations are not released until late in December or afterwards. It would be unfair to require effort plans before a nation knew the quantity and location of its allocation.

III. Fee Collection Procedures

The preamble to the proposed rulemaking explained the difficulties of administering the present fee collection procedure, which requires cash payment for the allocation in advance of catching operations. Establishing a letter of credit is the new procedure. The NOAA will draw on the letter of credit for the poundage fee of the actual catch at the end of each quarter. Most commenters favor this new procedure.

One commenter asked that NOAA allow a cash payment in lieu of the letter of credit for at least the first quarter. NOAA is granting this option to each foreign fishing nation which

notifies NMFS that cash payment will be made before January 1.

A second commenter asked if the owner or operator of the foreign vessel or the government of the vessel's country of registry would establish the letter of credit. NOAA has no preference when only one vessel owner is harvesting the nation's allocation; the important matter is that a single letter of credit for all vessels of a country be established and maintained in a United States bank. In cases where more than one vessel owner harvests a national allocation, failure to establish or maintain the letter of credit at the required levels would result in cessation of all fishing on the national allocation. The vessel owners or operators should establish the mechanics of payment with their government to ensure continuity of their fishing privileges throughout the year.

A third commenter asked if the letter of credit for the first quarter could be established for less than 25 percent of the 1980 allocation at the 1981 price, since less than 25 percent of the 1980 catch was taken in the first quarter. The final regulations retain the 25 percent requirement in order to minimize bookkeeping and to keep the procedures as simple as possible. NOAA will draw quarterly only the amount needed for fees for actual catch during that quarter, however. The concept of linking the percentage to past catch performance has merit, and NOAA will consider making refinements for 1982 as experience is gained with collection procedures.

IV. Other Matters

The Assistant Administrator for Fisheries, NOAA, has determined that these amendments do not constitute a major Federal action within the meaning of the National Environmental Policy Act of 1969, as amended, since the amendments will not affect the quantity of fish harvested. Therefore, no environmental assessment or environmental impact statement is required. The Assistant Administrator also has determined that these amendments do not constitute a significant action under Executive Order 12044, and therefore do not require a regulatory analysis.

The Assistant Administrator has determined that some countries may wish to begin harvesting their 1981 allocation on January 1, 1981. Therefore, the increased fee surcharge of 20 percent and the new fee collection procedures must be effective on January 1, 1981. Accordingly, the Assistant Administrator waives part of the 30-day delay in implementation required under the Administrative Procedures Act. The full 30-day delay for the new effort plan is not waived.

Signed at Washington, D.C., this 19th day of December, 1980.

Robert K. Crowell,

Deputy Executive Director, National Marine Fisheries Service.

(16 U.S.C. 1801 *et seq.* and 22 U.S.C. 1971 *et seq.*)

For the reasons set out in the preamble, 50 CFR Part 611 is amended as follows:

1. Section 611.15(a)(6) is amended by removing the word "or".

2. Section 611.15(a) is amended by replacing the period in paragraph (7) with "; or".

3. Section 611.15(a) is amended by adding a new paragraph (8) to read as follows:

§ 611.15 Fishery closure procedures. [Amended]

(a)* * *

(8) The owner or operator of the foreign fishing vessel has not established and maintained the letter of credit required in § 611.22(a)(2)(ii).

* * * * *

§ 611.20 [Amended]

4. Section 611.20, Total Allowable Level of Foreign Fishing, is amended by removing paragraph (c).

5. Section 611.21 is amended by revising paragraph (b)(1) to read as follows:

§ 611.21 Allocations [Amended]

* * * * *

(b) *Effort Plan.* (1) After the Secretary of State notifies each foreign nation of its allocation or reallocation of target species, each such nation must prepare and submit an effort plan to the Assistant Administrator for Fisheries, NOAA, NMFS, 3300 Whitehaven Street NW., Washington, D.C. 20235. Effort plans may be submitted after catching begins if adequate time to prepare the plan does not exist between the allocation or reallocation and the start of catching, but the plan must be submitted before 30 days have elapsed after a corresponding allocation or reallocation. The effort plan should follow this format:

Name of Country; Fishing area (BSA, NWA, etc.)

Gear type	Type/size of vessel	Main target species	Approximate dates of fishing in FCZ	Estimated catch per vessel day

In the Pacific billfish and sharks fishery, the fishing area should be further subdivided and identified as West Coast, Hawaii and Midway Islands, Guam and Northern Marianas Islands, American Samoa, or U.S. possessions.

* * * * *

6. Amend § 611.22 as follows:

A. In § 611.22, the first sentence of paragraph (a)(1)(i) is revised.

B. Remove paragraph (a)(2)(ii).

C. Revise paragraph (a)(2)(i) in its entirety.

D. Revise and redesignate paragraph (a)(3) as new paragraph (a)(2)(ii).

E. Revise and redesignate paragraph (c) and paragraph (b), remove old paragraph (b).

F. Add a new subparagraph (iii) to paragraph (a)(2).

The amended, added and revised portion of § 611.22 reads as follows:

§ 611.22 Fee schedule for foreign fishing permits.

(a) * * *

(1) *Permit fees.* (i) Each vessel permit application submitted under § 611.3 must be accompanied by a fee of $50.00 per vessel, plus the surcharge required under paragraph (b) of this section.

* * * *

(2) *Poundage fees.* (i) The poundage fees for each allocated species is calculated at 3.5 percent of the actual landed value per metric ton of the species to U.S. fishermen for the most recent year for which such data are available. The following ex-vessel prices to be used for computing fees are based on U.S. commercial landings price using the most recent reliable information for 1979, or based on Japanese prices below:

Exvessel Values Per Metric Ton

Species	1980 values
Atlantic:	
Butterfish	[1] $927
Hake, red	[1] 315
Hake, silver	[1] 369
Herring, river	[1] 113
Mackerel, Atlantic	[1] 530
Other finfish	[1] 930
Sharks (except dogfish)	[1] 1,091
Squid—*Illex*	[2] 170
Squid—*Loligo*	[2] 993
Pacific and North Pacific:	
Atka mackerel	[3] 223
Cod, Pacific	[4] 419
Crabs, Snow (tanner)—*Opilio*	[5] 882

Exvessel Values Per Metric Ton—Continued

Species	1980 values
Flounders	[4]397
Hake (Pacific whiting)	[6]170
Herring sea—roeless	[4]165
Herring, sea—w/roe	[3]1,468
Jack mackerel	[6]154
Ocean perch	[4]337
Other groundfish	[7]50
Pollock	[9]220
Rockfishes	[4]397
Rockfish, idiot	[5]397
Sablefish—longline	[3]1,587
Sablefish—trawl	[5]661
Snails (meats)	[3]658
Squid	[3]324
Turbot (including arrow tooth flounder and Greenland turbot)	[5]265
Western Pacific:	
Dolphin	[8]4,354
Other billfish	[8]1,111
Seamount groundfish	[3]397
Sharks (except dogfish)	[8]825
Striped marlin	[8]2,816
Swordfish	[8]3,036
Wahoo	[8]2,968

[1]Maine, Massachusetts, Rhode Island, New York, New Jersey, and Virginia, U.S. landings—January–June 1979.
[2]U.S. landings, New York, January–June 1979.
[3]Prices in Japan, January–June 1979.
[4]U.S. landings, Alaska, September 1979.
[5]U.S. landings, Alaska, season price, 1979.
[6]U.S. landings, Washington, Oregon and California—September 1979.
[7]Based on price for U.S. landings of northern anchovy—September 1979.
[8]Hawaii landings, 1978.
[9]Ex-vessel price paid in 1979 in Japan for Soviet-caught pollock.

Note.—No fees will be charged for rattails (grenadiers). This species is taken incidentally in the sablefish longline fishery. The species is of no commercial value, and is routinely discarded by U.S. and foreign fishermen.

(ii) *Method of Payment of Poundage Fees.* If a nation chooses to accept an allocation, an irrevocable letter of credit must be established and maintained for at least 25 percent of the previous year's total allocations at the rate in paragraph (a)(2)(i) of this section, or as determined by the Assistant Administrator, plus the surcharge required by paragraph (b) of this section. The Department of Commerce, NOAA, must be designated as the beneficiary. The customer must pay all service charges. The letter of credit must be confirmed by a Federally chartered bank in the United States. No catching will be permitted unless (A) the letter of credit is established, and (B) authorized written notice of its issuance and confirmation are provided to the Assistant Administrator at the address in paragraph (a)(1) of this section. No catching will be permitted if the amount of the letter of credit falls below 25 percent of the poundage fee plus the surcharge required by paragraph (b) of this section.

(iii) *Assessment of Poundage Fees.* Poundage fees will be assessed quarterly for the actual catch during January–March, April–June, July–September, and October–December. The appropriate Regional Director will reconcile catch figures with each country, following the procedures of § 611.15(b). When the catch figures are agreed upon, NOAA will present a bill for collection as the documentary demand for payment to the confirming bank. If, after 45 days from the end of the quarter, catches have not been reconciled, the estimate of the regional Director will stand and a bill will be issued for that amount. If necessary, the catch figures may be refined by the Regional Director during the next 60 days, and any modifications will be reflected in the next quarter's bill.

(b) The owner or operator of each foreign vessel who submits a vessel permit application under paragraph (a)(1) of this section or who accepts and pays poundage fees under paragraph (a)(2) of this section must pay a surcharge equal to 20 percent of the fees. The Assistant Administrator may reduce or waive the surcharge if he determines that the Fishing Vessel and Gear Damage Compensation Fund is capitalized sufficiently.

[FR Doc. 80-40567 Filed 12-30-80; 8:45 am]
BILLING CODE 3510-22-M

Proposed Rules

Federal Register
Vol. 45, No. 252
Wednesday, December 31, 1980

This section of the FEDERAL REGISTER contains notices to the public of the proposed issuance of rules and regulations. The purpose of these notices is to give interested persons an opportunity to participate in the rule making prior to the adoption of the final rules.

NUCLEAR REGULATORY COMMISSION

10 CFR Part 50

Codes and Standards for Nuclear Power Plants

AGENCY: Nuclear Regulatory Commission.

ACTION: Proposed rule.

SUMMARY: The Nuclear Regulatory Commission is considering amending its regulations to incorporate by reference new addenda of the ASME Boiler and Pressure Vessel Code. The sections of the ASME Code being incorporated provide rules for the construction of nuclear power plant components and specify requirements for inservice inspection of those components. Adoption of these amendments would permit the use of improved methods for construction and inservice inspection of nuclear power plants.

DATES: Comment period expires February 17, 1981.

ADDRESSES: All interested persons who wish to submit written comments or suggestions in connection with the proposed amendments should send them to the Secretary of the Commission, U.S. Nuclear Regulatory Commission, Washington, D.C. 20555, Attention: Docketing and Service Branch. Copies of comments received may be examined in the Commission's Public Document Room at 1717 H Street NW., Washington, D.C.

FOR FURTHER INFORMATION CONTACT: Mr. E. Baker, Office of Standards Development, U.S. Nuclear Regulatory Commission, Washington, D.C. 20555, Phone 301-443-5999.

SUPPLEMENTARY INFORMATION: On October 9, 1979 the Nuclear Regulatory Commission published in the Federal Register (44 FR 57911, 44 FR 57912) amendments to its regulation, 10 CFR Part 50, "Licensing of Production and Utilization Facilities." The amendments revised § 50.55a to incorporate by reference the 1977 Edition and Addenda through the Summer 1978 Addenda to Section III, Division 1, "Rules for the Construction of Nuclear Power Plant Components," of the ASME Boiler and Pressure Vessel Code and Section XI, "Inservice Inspection of Nuclear Power Plant Components," of the ASME Code. Since that time the Winter 1978 Addenda and Summer 1979 Addenda have been issued. The Commission proposes to revise § 50.55a to incorporate by reference the Winter 1978 Addenda and Summer 1979 Addenda of Section III and Section XI of the ASME Boiler and Pressure Vessel Code.

Pursuant to the Atomic Energy Act of 1954, as amended, the Energy Reorganization Act of 1974, as amended, and section 553 of Title 5 of the United States Code, notice is hereby given that adoption of the following amendments to 10 CFR Part 50 is contemplated.

1. In § 50.55a, paragraph (b)(1) is revised to read as follows:

§ 50.55a Codes and standards.

* * * * *

(b)(1) As used in this section, references [1] to Section III of the ASME Boiler and Pressure Vessel Code refer to Section III, Division 1, and include editions through the 1977 Edition and addenda through the Summer 1979 Addenda.

* * * * *

2. In § 50.55a, the introductory portion of paragraph (b)(2) is revised to read as follows:

* * * * *

(b)(2) As used in this section, references [1] to Section XI of the ASME Boiler and Pressure Vessel Code refer to Section XI, Division 1 and include editions through the 1977 Edition and addenda through the Summer 1979 Addenda, subject to the following limitations and modifications:

* * * * *

(Secs. 103, 104, 161b. and i., Pub. L. 83-703; 68 Stat. 936, 937, 948; Sec. 201, Pub. L. 93-438, 88 Stat. 1242; (42 U.S.C. 2133, 2134, 2201(b) and (i), 5841))

Dated at Bethesda, Md., this 22d day of December 1980.

[1] These incorporation by reference provisions were approved by the Director of the Federal Register on March 17, 1972, May 4, 1973, and February 7, 1978.

For the Nuclear Regulatory Commission.
William J. Dircks,
Executive Director for Operations.

[FR Doc. 80-40671 Filed 12-30-80; 8:45 am]
BILLING CODE 7590-01-M

FEDERAL HOME LOAN BANK BOARD

12 CFR Part 590

[No. 80-811]

Federal Usury Preemption

Dated: December 18, 1980.

AGENCY: Federal Home Loan Bank Board.

ACTION: Proposed regulation.

SUMMARY: The Federal Home Loan Bank Board is proposing regulations regarding the status of wraparound mortgages under the preemption of state interest ceilings applicable to Federally-related residential first mortgages. The Board is also proposing amendments to the usury preemption regulations in order to conform those rules with recent statutory changes.

DATE: Comments must be received by: March 2, 1981.

ADDRESS: Send comments to the Office of the Secretary, Federal Home Loan Bank Board, 1700 G Street, N.W., Washington, D.C. 20552. Comments will be available for public inspection at this address.

FOR FURTHER INFORMATION CONTACT: James C. Stewart, Office of General Counsel, Federal Home Loan Bank Board, at the above address. Telephone number: (202) 377-6457.

SUPPLEMENTARY INFORMATION: Pursuant to the authority granted by § 501(f) of Public Law 96-221, the Federal Home Loan Bank Board is proposing an amendment to the Regulations for Federally-Related Mortgage Loans (12 CFR Part 590) to make the Federal usury preemption applicable to certain types of loan transactions that confer rights equivalent to first-lien loans.

The Board has been asked to consider the applicability of the Federal usury preemption statute to wraparound-mortgage loans used for the purchase of residential real property. As described by requestors, a wraparound-mortgage loan is a purchase-money loan that: (1) is secured by a lien on residential real property on which there exists one or more prior liens securing prior

indebtedness; (2) matures no earlier than the latest maturity date of any such indebtedness; and (3) is evidenced by a note or bond which: (A) in principal amount equals the aggregate of the outstanding prior indebtedness plus the additional funds advanced by the wraparound lender; (B) requires payments by the wraparound borrower to the wraparound lender of periodic installments at least sufficient to make required current payments on the prior indebtedness; and (C) requires the wraparound lender to make the payments due on the prior indebtedness as long as installments are received from such borrower. In addition, the wraparound lender has the right to cure defaults with respect to any prior indebtedness or to satisfy such indebtedness. The wraparound lender also has the right to obtain from the borrower any funds it advances that are necessary to secure or protect its lien.

Unlike a conventional first-mortgage transaction, the wraparound borrower is able to take advantage of any existing low-interest loan which is secured by the property. Since the wraparound lender advances only a portion of the total purchase price, the combined interest rate on the wraparound note can be much lower than that required in a comparable first-mortgage transaction. If calculated as a percentage of the sums actually advanced, however, the interest rate on the loan may exceed state interest rate ceilings.

Some lenders have submitted to the Board that a wraparound mortgage of the type described above would confer greater rights to a wraparound lender than a regular second mortgage and would be sufficient to satisfy the statutory first-lien requirement. In the event of default by the wraparound borrower, the wraparound lender is in a position to keep payments on the initial lien current and prevent a forclosure of that lien. Thus, the wraparound lender's rights in the collateral are not necessarily subject to prior satisfaction of the initial lien.

The Board believes that in certain circumstances the wraparound mortgage described above would have characteristics and would confer rights sufficient to satisfy the first-lien requirement of the statute. Under the proposed regulation, a wraparound mortgage that met the standards described above would be deem to satisfy the statutory first-lien requirement if it also met the following requirements. First, the wraparound mortgage must be created as part of a purchase-money transaction (*i.e.*, a transaction in which the borrower is obtaining funds to purchase residential real property). Second, the wraparound lender must have funds sufficient at all times to make payments on the prior encumbrances. In view of the possibility of acceleration of prior liens, a wraparound lender must have assets sufficient to satisfy the entire preceding obligation if the lender is to have the equivalent of a first lien.

When previously asked whether wraparound mortgages satisfied the definition of first lien formerly contained in § 541.14 of the Regulations for the Federal Savings and Loan System (12 CFR Subchapter C), the Board's Office of General Counsel has taken the position most recently that wraparound mortgages would satisfy that definition only if the Federal association recorded the amount of prior encumbrances as a liability on the association's books. In this way, the Board's field examiners would be made aware of the potential liability and could ensure that the association was financially able to protect its investment.

The Federal usury preemption statute, however, applies to a much broader range of lenders than the regulations for Federal associations. The Board cannot assume that methods developed for regularly supervised and examined lenders will have equal validity if applied to the other lenders covered by the statute. The proposal therefore draws a distinction between lenders that are regularly examined and supervised by a Federal or state authority and unsupervised lenders. Regulated lenders would meet the requirements for first lien by establishing a liability account descriptive of the lender's prior-lien obligation. The Board specifically requests comments from representatives of unregulated lenders, such as mortgage bankers, regarding alternative standards which might guarantee that such lenders will be able to protect themselves in the event of borrower default. Escrows in the amount of the prior indebtedness have been suggested for this purpose.

The Board is of the view that the proposed regulatory amendment would advance the stated Congressional purposes of the Federal usury preemption by fostering the continued availability of home financing. By providing financing at lower rates than the prevailing rate on other mortgages, wraparound loans should permit greater numbers of households to purchase homes.

The Board also at this time is proposing amendments to the Regulations for Federally-Related Mortgage Loans to reflect recent changes in the statutory usury preemption provisions. Under § 324 of the Housing and Community Development Act, enacted in October, 1980, the preemption will be generally available to loans secured by stock allocated in a residential housing cooperative. The definition of "Federally-related loan" has also been amended to include loans made by individuals financing the sale or exchange of a dwelling used as a principal residence.

Accordingly, the Board hereby proposes to amend Part 590, Subchapter F, Chapter V of Title 12, *Code of Federal Regulations*, as set forth below.

Regulations for Federally-Related Mortgage Loans

PART 590—PREEMPTION OF STATE USURY LAWS

1. Amend § 590.2(b) by removing the period at the end of subdivision (b)(6)(ii) and adding "; or", and by adding a new paragraph (b)(7) to read as follows:

§ 590.2 Definitions.

* * * * *

(b) * * *

(7) Made by any individual who finances the sale or exchange of residential real property which such individual owns and which such individual occupies or has occupied as his or her principal residence.

2. Amend § 590.2(c) by redesignating the current text as paragraph § 590.2(c)(1), and adding a new § 590.2(c)(2) to read as follows:

* * * * *

(c)(1) * * *

(2) "Loans which are secured by first liens on real estate" shall also include purchase-money loans secured by liens on property subject to prior liens securing prior indebtedness, when the loan so secured:

(i) matures no earlier than the latest maturity date of the prior indebtednesses;

(ii) equals in principal amount the aggregate of the outstanding prior indebtedness plus the additional funds advanced;

(iii) requires periodic payments by the borrower sufficient to meet required current payments on prior indebtedness;

(iv) requires the lender to make payments due on prior indebtedness as long as payments are received from the borrower;

(v) gives the lender the right to cure defaults with respect to any prior indebtedness or to satisfy such indebtedness; and

(vi) obligates the borrower to reimburse the lender for sums advanced

in order to secure or protect the lender's lien;

Provided, that such lender shall at all times have sufficient funds available to satisfy such prior indebtedness. Lenders regularly examined and supervised by a state or Federal authority will be deemed to have sufficient funds available if the amount of prior indebtedness is recorded as a liability on the lender's books.

§ 590.3 [Amended]

4. Amend § 590.3(a)(2)(ii) by striking out the word "stock" the first place it appears and inserting in its place the words "all stock allocated to a dwelling unit", and by striking out the phrase "where the loan, mortgage, or advance is used to finance the acquisition of such stock".

(Sec. 501(f) of the Depository Institutions Deregulation and Monetary Control Act, Pub. L. No. 96-221, 94 Stat. 161 (1980))

By the Federal Home Loan Bank Board.

J. J. Finn,

Secretary.

[FR Doc. 80-40686 Filed 12-30-80; 8:45 am]

BILLING CODE 6720-01-M

DEPARTMENT OF EDUCATION

34 CFR Part 78

Education Appeal Board; Proceedings

AGENCY: Department of Education.

ACTION: Notice of proposed rulemaking.

SUMMARY: The Secretary of Education proposes regulations to establish new rules for expediting the conduct of proceedings before the Education Appeal Board involving appeals from audit findings in which the amount in controversy in the appeal is less than $100,000.

DATE: Comments on these regulations must be received on or before February 17, 1981.

ADDRESSES: Written comments should be addressed to Mona M. Murphy, attorney-advisor, Education Appeal Board, U.S. Department of Education, 400 Maryland Avenue, SW, Room 2141 (FOB-6), Washington, D.C. 20202. Telephone (202) 245-7835.

FOR FURTHER INFORMATION CONTACT: Mona M. Murphy, attorney-advisor to the Education Appeal Board. Telephone: (202) 245-7835.

SUPPLEMENTARY INFORMATION:

A. Background and Overview

Section 451(e) of the General Education Provisions Act, 20 U.S.C. 1234(e), authorizes the Secretary of Education to prescribe rules of conduct for proceedings before the Education Appeal Board. Rules of conduct before the Board were published on April 3, 1980, at 45 FR 22635-22640 as 45 CFR Part 100d (Redesignated at 45 FR 77368 as 34 CFR Part 78).

The Secretary of Education proposes to amend these rules by establishing procedures that will expedite the resolution of audit disputes in which the amount in controversy in the appeal is less than $100,000. In some cases, a Panel of the Board may determine that a particular dispute raises an issue of such complexity, significant legal precedence, or other compelling factor, that the procedures contained in these amendments will not apply. With the recent designation of appeals from final audit determinations in discretionary grant programs to the Education Appeal Board's jurisdiction however, relatively uncomplicated disputes of less than $100,000 now account for a large portion of the Board's docket.

It is in the public interest to have a more expeditious resolution of uncomplicated cases appealed to the Board which involve relatively small amounts of money. The proposed amendments to the Education Appeal Board's regulations are designed to permit the Board to resolve most audit disputes of less than $100,000 in a manner that is both expeditious and fully consistent with considerations of fairness and equity. They simplify these proceedings by establishing, unless the Board's Panel rules otherwise, a fixed schedule for the parties' submissions, and by eliminating certain other provisions that are not necessary to the resolution of these cases. In so doing, the proposed amendments retain the basic elements of practice before the former Department of Health, Education and Welfare Grant Appeals Board in proceedings involving appeals from audit findings in discretionary grant programs.

Under the proposed rules of practice and procedure for cases involving small claims, responsibility for the prompt preparation of the record will lie with the parties themselves. Before audit disputes reach the appeal level, most parties already have had an opportunity to examine each other's supporting documents thoroughly. Consequently, if an appeal is filed with the Board, the parties to the proceeding should immediately be able to submit their arguments without the need for first convening a conference with the Panel. At this stage in the proceedings, the assistance of the Panels should be unnecessary. Moreover, by requiring the parties to file their briefs according to a schedule as soon as a Panel has been assigned to hear the proceeding, these amendments should also help the Panel to proceed expeditiously with its deliberations.

These amendments also specify that the Panel may convene an informal conference or opportunity for oral presentation only if the Panel decides that one is necessary, either to help it resolve adequately an issue of fact or law or to assure that a party otherwise will not be prejudiced. The Panel usually will have the benefit of a complete record when deciding whether a conference or opportunity for oral presentation is necessary.

B. Summary of Major Provisions

1. *Submissions.* Within 90 days of being notified that the Board has assigned a Panel to hear the appeal, the appellant shall file with the Board its brief, discussion of the issues, or other arguments together with any supporting documents it wishes the Board to consider. The Department of Education official who issued the final determination from which the appeal is taken, or other designate of the Secretary, shall do likewise within 45 days of receipt of the appellant's submission.

2. *Exchanges of Information.* The parties are encouraged to exchange any relevant information before the Secretary of Education, or the Secretary's designate, make a final determination that may be appealed to the Board. After an appeal is filed, the parties are expected immediately to conclude any exchanges of information in order to avoid any conflict with the schedule for written submissions.

3. *Conduct of Hearings.* Conferences with the Panel and oral presentations before the Panel will occur only when the Panel requests them. The Panel will provide a party an opportunity to present oral testimony or argument only when it determines that the party would otherwise be prejudiced or where the case includes a dispute as to a material fact or legal issue whose resolution would be materially assisted by oral testimony or argument.

4. *Pending cases.* The Chairman of the Education Appeal Board will notify all parties to matters pending before the Board that are affected by these amendments that they will receive a further notice that a Panel has been assigned to hear the appeal. The Board Chairperson will also notify the parties that the second notice will state that the parties may supplement the records in a manner that is consistent with these amendments. Both notices will be sent

by certified mail, return receipt requested. Because the implementation of these regulations might create an immediate burden on the resources of the Board and the parties, the Board's Chairperson will coordinate efforts to assure that the notices stating that Panels have been assigned are transmitted in an orderly manner. All parties to matters pending before the Board are urged to contact the Board Chairperson immediately in order to specify any scheduling difficulties they anticipate.

Invitation to Comment

Interested persons are invited to submit comments and recommendations regarding these proposed regulations on or before February 17, 1981. Written comments and recommendations may be sent to the address given at the beginning of this notice.

All comments submitted in response to these proposed regulations will be available for public inspection, during and after the comment period, in Room 2079, FOB-6, 700 Maryland Avenue, SW., Washington, D.C. between the hours of 8:30 a.m. and 4:00 p.m., Monday through Friday of each week except Federal holidays.

Citation of Legal Authority

A citation of statutory or other legal authority is placed in parentheses on the line following each substantive provision of these proposed regulations.

(Catalog of Federal Domestic Assistance No. not applicable)

Dated: December 22, 1980.

Shirley M. Hufstedler,

Secretary of Education.

The Secretary proposes to amend Title 34 of the Code of Federal Regulations by adding to Part 78 a new Subpart G, to read as follows:

Subpart G—Audit Determinations: Special Small Claims Procedure

Sec.

Sec. 78.101 Applicability of this Subpart.
Sec. 78.102 Relation to rules in Subpart E.
Sec. 78.103 Exchange of information.
Sec. 78.104 Formal submissions.
Sec. 78.105 Additional rule on evidence.
Sec. 78.106 Written submissions normally required.

Authority. Section 1232 of the Education Amendments of 1978, Pub. L. 95-561, 96 Stat. 2347-2351 (20 U.S.C. 1234).

Subpart G—Audit Determinations: Special Small Claims Procedure

§ 78.101 Applicability of this Subpart.

(a) Except as provided in paragraphs (b) and (c) of this section, the rules contained in this Subpart govern the conduct of all proceedings before the Board that involve review of final audit determinations within the Board's jurisdiction (see § 78.2 (Jurisdiction)) in which the amount in controversy in the appeal is less than $100,000.

(b) The Panel may determine that because a proceeding raises an issue of such complexity, significant legal precedence or other compelling factor, the rules contained in this Subpart do not apply to the proceeding.

(c) The rules contained in this Subpart do not apply to any proceeding in which a Panel has established a prehearing schedule prior to the effective date of these regulations.

(20 U.S.C. 1234(e))

§ 78.102 Relation to rules in Subpart E.

All rules of practice and procedure contained in Subpart E (Practice and Procedure) apply to the proceedings governed by this Subpart except those contained in the following:

(a) Exchange of information—§ 78.50.

(b) Written submissions normally required—§ 78.71.

(20 U.S.C. 1234(e))

§ 78.103 Exchange of information.

There is no discovery as conducted under the Federal Rules of Civil Procedure. The parties are encouraged to exchange relevant documents and information at the outset of the proceeding in a timely manner in order to file written submissions according to the schedule set forth in § 78.104 (Formal submissions).

(20 U.S.C. 1234(e))

§ 78.104 Formal submissions.

(a) Within 90 calendar days of either its receipt of a notice from the Board's Chairperson that a Panel has been assigned to hear the case, or the effective date of these regulations if a Panel had already been assigned but no prehearing schedule has been directed, the appellant, in all cases, shall file its written submission with the Board. An appellant that had already filed a written submission with the Board before the effective date of these regulations, may file a further written submission within the same period.

(b) Within 45 calendar days of receipt of the appellant's written submission, or, if the appellant does not file one, within 45 days of the date one would have been due for filing, as provided in paragraph (a) of this section, the Department official who issued the final audit determination, or the Secretary's designate, shall file with the Board a written submission of its case.

(c) An intervenor (see § 78.43 (Intervention)) whose petition to intervene is approved by the Board Chairperson prior to its receipt of a notice that a Panel has been assigned to hear the case, shall file its written submission—

(1) Within the period provided in paragraph (a) of this section, if the intervenor contests all audit findings of which it has an interest;

(2) Within the period provided in paragraph (b) of this section, if the intervenor concurs in all audit findings of which it has an interest; or

(3) Within a period directed by the Panel if the intervenor neither contests nor concurs in all of the audit findings of which it has an interest.

(d) In the event that an intervenor (See § 78.43 (Intervention)) has its petition to intervene approved by the Panel after the Panel is assigned to hear the case, or in the event the intervenor neither contests nor concurs in all audit findings of which it has an interest, the Panel promptly will direct an appropriate schedule for submissions by all parties that is consistent with the time periods contained in this section.

(e) Each party's submission shall consist of—

(1) A brief, or other statement in support of its position; and

(2) Any supporting documents which the party may wish the Panel to consider as evidence.

(f) Each party may make one reply submission, which shall be filed within 20 calendar days of the date of the preceding submission of the opposing party.

(g) Unless the Panel requests them, it will not accept any other submissions from any party.

(20 U.S.C. 1234(e))

§ 78.105 Additional rule on evidence.

Unless the Panel requests a party to submit evidence for the Panel's consideration, it will only consider evidence if the party submitting it has complied with the provisions contained in § 78.104 (Formal submissions).

(20 U.S.C. 1234(e))

§ 78.106 Written submissions normally required.

(a) The parties shall present their positions through briefs and the submission of other documents. They also may request an informal conference as set forth in § 78.62 (Conferences) and an opportunity for oral argument or an evidentiary hearing.

(b) The Panel will not convene a conference, an evidentiary hearing, or an opportunity for oral argument unless it finds that without one—

(1) A party may be prejudiced; or

(2) The Panel may be unable properly to resolve an issue of material fact or law raised in the procedings.

(c) The Panel may designate one of its members to attend the conference, argument or hearing on behalf of the Panel.

(20 U.S.C. 1234(e))

[FR Doc. 80-40525 Filed 12-30-80; 8:45 am]

BILLING CODE 4000-01-M

34 CFR Parts 655, 656, 658, 660, and 667

International Education Programs

AGENCY: Department of Education.

ACTION: Notice of proposed rulemaking: Cross-reference.

SUMMARY: The Secretary proposes regulations for the International Education Programs in Title 34 of the Code of Federal Regulations:

(a) International Education Programs—General (Part 655).

(b) National Resource Centers and Fellowships Program for Language and Areas or Language and International Studies (National Resource Centers and Fellowships Program) (Part 656).

(c) Undergraduate International Studies and Foreign Language Program (Part 658).

(d) The International Research and Studies Program (Part 660).

(e) The International Understanding Program (Part 667).

The Secretary invites comments on these proposed regulations.

The texts of the regulations on which the Secretary invites comments are published in the Rules and Regulations section of this issue of the Federal Register. They have been adopted as final regulations and will govern these programs until the Secretary issues new regulations based on public comment.

DATES: All comments, suggestions, or objections must be received on or before March 2, 1981.

ADDRESSES: Comments should be addressed to: Dr. Richard Krasno, Deputy Assistant Secretary for International Education, U.S Department of Education, 400 Maryland Avenue, SW, (Room 3918, ROB-3), Washington, D.C. 20202.

FOR FURTHER INFORMATION CONTACT: Dr. Richard Krasno. Telephone: (202) 245-9758.

SUPPLEMENTARY INFORMATION:

Invitation to Comment

For additional details on how to comment, see the Preamble of the final regulations for these programs published in this issue of the Federal Register.

Date: December 23, 1980.

Shirley M. Hufstedler,

Secretary of Education.

(Catalog of Federal Domestic Assistance Numbers 84.015, International Studies Centers and Foreign Language and Area Studies Fellowships; 84.016, International Studies Programs; 84.017, Foreign Language and Area Studies Research; and 84.095, Citizen Education and Cultural Understanding Program)

[FR Doc. 80-40524 Filed 12-30-80; 8:45 am]

BILLING CODE 4000-01-M

POSTAL SERVICE

39 CFR Part 111

Advice to Postal Customers and Rendering Decisions on the Mailability of Matter

AGENCY: Postal Service.

ACTION: Proposed rule.

SUMMARY: This proposal would clarify the responsibilities of postmasters and subordinate employees such as acceptance clerks to provide advice or make determinations concerning the mailability of matter, and to seek enforcement of laws and regulations prohibiting the mailing of certain matter. It would also emphasize that these functions must be performed consonant with the requirements of the mail security regulations in Part 115, *Domestic Mail Manual.*

DATE: Comments must be received on or before January 29, 1981.

ADDRESS: Comments should be written and directed to the Assistant General Counsel, Consumer Protection Division, Law Department, U.S. Postal Service, Washington, D.C. 20260. Copies of all comments received will be available for inspection and photocopying between 9 a.m. and 4 p.m., Monday through Friday in Room 9124, U.S. Postal Service Headquarters, 475 L'Enfant Plaza West, SW., Washington, D.C.

FOR FURTHER INFORMATION CONTACT: George C. Davis, Telephone: (202) 245-4385.

SUPPLEMENTARY INFORMATION: The Postal Service is concerned that Domestic Mail Manual § 123.3 and portions of § 124.1 as currently worded might be misconstrued to permit unauthorized opening or detention of mail thought to contain nonmailable matter. To help prevent such occurrences, it is proposed to state explicitly that these provisions do not authorize mail opening, delay, detention, or inspection and that mail opening, delay, detention, and inspection are govserned by Part 115;* to transfer (with appropriate revision), from § 123.3 to § 124.1, all procedural guidelines which relate to the mailability provisions of Part 124; and to reword §§ 123.3 and 124.1 in part to make clear that postmasters are not authorized to decide the mailability of written, printed, or graphic matter (proposed § 123.33), but do have such authority with respect to articles and substances (proposed § 124.124).

Posters will be displayed at mail acceptance facilities cautioning the public not to place in the mails dangerous materials which are nonmailable (proposed § 124.122). Acceptance employees will refuse to accept articles the content of which is described by the mailer or otherwise revealed to be a nonmailable substance and will also refuse to accept substances which are nonmailable as packaged. In such cases the mailer will be advised of the reasons why the article was not accepted and any preparation and packaging requirements which must be satisfied before the particular substance would be acceptable for mailing. Specific instructions concerning the limited circumstances under which actual mail matter may be withheld from dispatch or delivery (proposed §§ 123.34, 124.126) or opened or inspected (proposed §§ 123.35, 124.122, 124.125) would be added.

These regulations apply to the military postal system at home and overseas, military postal employees, undelivered mail which is or has been in the custody of that system and those employees, as well as the civilian postal system, civilian postal employees, and undelivered mail which is or has been in civil postal custody. References in the proposal to the Inspection Service are intended to refer to the Postal Inspection Service and not to military investigative services.

Although exempted by 39 U.S.C. § 410(a) from the notice and comment requirements of the Administrative Procedure Act (5 U.S.C. § 553(b), (c)) regarding proposed rulemaking, the Postal Service invites public comment on the following proposed revisions of the *Domestic Mail Manual.*

*Part 115 was adopted in substantially its present form as a result of notice-and-comment rulemaking conducted in 1977 and 1978. 42 FR 18,754-18,756; 43 FR 14,308-14,315. Subsequent minor and non-substantive amendments were proposed and adopted as follows: 43 FR 40,812-40,815; 42,768-42,769; 44 FR 3,050-3,051; 3,056; 24,432-24,533; 37,229; 39,742-39,855. A general explanation of the policy of Part 115 and the legal authority for it accompanied the proposal, 42 FR 18,754-18,756, and final rule as originally adopted, 43 FR 14,308-14,312.

PART 123—NONMAILABLE MATTER—WRITTEN, PRINTED, AND GRAPHIC

1. Revise 123.3 to read as follows:

123.3 Advice to Mailers-Mailability Decisions

.31 *General Advice.* When a postal customer seeks advice as to whether, or under what conditions, particular matter described in 123 may be mailed, the customer's attention should be called to any relevant provisions of this part; and the customer may be assisted in using and understanding these provisions.

.32 *Mailer's Responsibility.* The mailer is responsible for compliance with applicable postal laws and regulations governing mailability and preparation for mailing, as well as non-postal laws and regulations pertaining to the possession, treatment, transmission, or transfer of particular matter. The general requirements applicable to preparation, packaging, and packing of mailable matter are contained in part 121. Special requirements applicable to preparation, packaging, and packing of potentially dangerous matter are contained in part 124.

.33 *Certain Mailability Decisions Not Authorized.* Postmasters are not authorized to decide whether written, printed, or graphic matter is, because of its content, nonmailable. Postmasters are not permitted to deny entry to such matter, or exclude it from the mails. As stated in 123.31, postmasters should call the attention of prospective mailers of such matter to any apparently relevant provisions of this part. If, after being so informed, the mailer requires that matter described in this part be accepted for mailing, such matter must be accepted and must be treated as provided in 123.34. Written, printed, or graphic matter which is not properly prepared for mailing may be refused.

.34 *Referral to the Inspection Service.* A report concerning written, printed, or graphic matter found in the mails which appears to be nonmailable must be forwarded to the Inspection Service. Such matter may not be withheld from dispatch or delivery except where the Inspection Service, acting in accordance with 115.31a, specifically instructs such withholding.

.35 *Opening or Inspection of Mail.* Mail may not be opened, detained, delayed, or inspected, except in accordance with Part 115.

.36 *Applicability to Military Postal System.* This Part 123 applies to the military postal system, its employees, and undelivered mail which is or has been in the official custody of that system and its employees. References in this Part 123 to the Inspection Service refer to the Postal Inspection Service and its authorized personnel, not to military investigative services.

PART 124—NONMAILABLE MATTER—ARTICLES AND SUBSTANCES; SPECIAL MAILING RULES

2. In 124.1, redesignate .15 and .151 through .155 as .14 and .141 through .145 respectively, and revise the remainder of the sections to read as follows:

124.1 General Provisions

.11 *Scope.* The basic premise of the postal mailability statutes is that anything "which may kill or injure another, or injure the mails or other property . . . ." is nonmailable. However, there are a number of *specific statutory exceptions* to this rule which allow particular mailings of otherwise nonmailable matter under specified conditions. Specific statutory exceptions apply to live scorpions, poisonous drugs and medicines, poisons for scientific use, switchblade knives, firearms, motor vehicle master keys, abortive and contraceptive devices. In addition, the statutes provide that the Postal Service may by regulation permit the mailing, under prescribed conditions of preparation and packing, of potentially harmful matter which is not "outwardly or of [its] own force dangerous or injurious to life, health, or property." This part summarizes the statutory prohibitions and exceptions. Publication 52, Acceptance of Hazardous, Restricted or Perishable Matter, repeats the statutory prohibitions and exceptions and sets forth the conditions of preparation and packing under which the Postal Service will accept for mailing many types of potentially harmful matter which otherwise would be nonmailable. See part 123 for rules relating to nonmailable written, printed, or graphic matter.

.12 *Rules and Procedures.*

.121 *Mailer's Responsibility.* The mailer is responsible for compliance with applicable postal laws and regulations governing mailability and preparation for mailing, as well as non-postal laws and regulations pertaining to the shipment of particular matter. The general requirements applicable to preparation, packaging, and packing of mailable matter are contained in part 121.

.122 *Dangerous Materials Notices*

Postmasters and other managers of postal facilities must prominently display in Post Office lobbies, acceptance areas, and at self-service Postal Centers a notice containing the following language:

"MAILING EXTREMELY DANGEROUS MATERIALS, AND POTENTIALLY DANGEROUS MATERIALS WHICH ARE IMPROPERLY PREPARED, IS PROHIBITED BY LAW. YOU MUST INSURE THAT YOUR MAILINGS COMPLY WITH THE LAW. ASK ABOUT POSTAL REQUIREMENTS BEFORE YOU DEPOSIT ANY QUESTIONABLE MATERIALS INTO THE MAILS."

.123 *Procedure for Acceptance Clerks.*

a. If the content of an article presented for mailing is described by the mailer or otherwise revealed to be nonmailable, the acceptance clerk shall refuse to accept the article and shall explain the reasons to the mailer. (Reference Publication 52, Acceptance of Hazardous or Perishable Articles and Publication 42, International Mail).

b. Acceptance clerks must be on the alert for substances which are nonmailable as packaged and where such substances are identified, shall advise the customer of the particular preparation and packaging requirements which must be satisfied before such substances are acceptable for mailing. (Reference Publication 52, acceptance of Hazardous or Perishable Articles and Publication 42, International Mail). If the customer fails to demonstrate that the matter is mailable as packaged, the employee shall refuse to accept the article and shall explain the reasons to the mailer.

.124 *General Advice to Mailers.* When a postal customer seeks advice as to whether, or under what conditions, particular matter may be mailed, or where it appears likely that a customer will mail dangerous matter (as described in part 124), the customer's attention should be called to the relevant provisions of part 124 and any official guides to mailing such articles issued by the Postal Service, such as Publication 52, Acceptance of Hazardous, Restricted or Perishable Matter. Technical questions concerning the proper preparation or packaging of matter may be referred to the appropriate Mail Classification Center where necessary. The scope of a postmaster's authority to decide whether particular matter is nonmailable under 124 and to exclude such matter from the mails in accordance with that decision is determined by 124.126. Mail may not be opened, detained, delayed, or inspected except in accordance with Part 115.

.125 *Other Laws and Regulations.* Particular matter may be mailable under postal statutes and regulations but customers may have responsibilities under non-postal statutes and regulations concerned with possession, treatment, transmission, or transfer of such matter. See, for example, 49 CFR Parts 100 through 177 (Department of

Transportation Regulations); the Comprehensive Drug Abuse Prevention and Control Act of 1970 (Public Law 91-513), 21 U.S.C. 801 *et seq.*; and the Gun Control Act of 1968 (Public Law 90-618), 18 U.S.C. 921 *et seq.* Postmasters must not give advisory opinions with respect to whether the mailing of particular articles and substances (see 124) would violate or comply with non-postal laws and regulations which are administered by agencies other than the Postal Service, but where the existence of such laws or regulations is known to postmasters, they should refer the customer to the appropriate government agency for any available information. For example, postal customers with questions about the interstate shipment of rifles or shotguns should be referred to the Director, Bureau of Alcohol, Tobacco and Firearms, Department of the Treasury, Washington, D.C. 20226, or to the nearest regional administrator of that Bureau.

.126 *Authorized Mailability Decisions.* Postmasters may decide whether articles and substances other than written, printed or graphic matter are nonmailable and must, where appropriate, refuse to accept for mailing such matter determined to be nonmailable. When necessary, the Mail Classification Centers should be consulted in determining mailability. If the mailer desires review of the postmaster's decision, the postmaster shall, with the mailer's consent, refer a sample and, in any event, send a complete statement of the facts to the Director, Office of Mail Classification, Rates and Classification Department, USPS Headquarters Washington, DC 20260. After the Director's decision is rendered, further appeal may be made by the mailer in accordance with 39 CFR Part 953, Rules of Practice in Proceedings Relative to Mailability. Postmasters are authorized and directed to take any steps reasonable and necessary to protect Postal Service personnel and equipment from the effects of potentially dangerous or injurious materials or substances found in the mails (See 221.3, Administrative Support Manual).

.127 *Referral to the Inspection Service.* Matter within the following categories, when found in the mails, should temporarily be withheld from dispatch or delivery, and the Inspection Service should immediately be advised. Such matter should thereafter be disposed of in accordance with instructions promptly furnished by the Inspection Service: nonmailable firearms and switchblade knives (124.4); controlled substances (124.5); motor vehicle master keys (124.6); alcohol (124.8); explosive, incendiary or hazardous materials or devices which may present an immediate threat to persons or property (124.2). This provision does not authorize the opening or imspection of any mail.

.128 *Referral to Office of Mail Classification.* All matter found in the mails and believed to be nonmailable under part 124, except matter described in 124.127, must be withheld from dispatch or delivery, but a report fully describing such mailing should be referred to the Director, Office of Mail Classification, Rates and Classification Department.

.129 *Administrative Appeals.* A mailer aggrieved by any mailability decision by the Director of the Office of Mail Classification may file a written Notice of Appeal with the Recorder, U.S. Postal Service, Washington, D.C. 20260, together with a copy or description of the determination or ruling in question. The rules of procedure for the determination of such appeals are contained in 39 CFR Part 953, Rules of Practice in Proceedings Relative to Mailability.

.13 *Applicability to Military Postal System.* This Part 124 applies to the military postal system, its employees, and undelivered mail which is or has been in the official custody of that system and its employees. References in this Part 124 to the Inspection Service refer to the Postal Inspection Service and its authorized personnel, not to military investigative services.

(39 U.S.C. 401, 403, 404(a), 3001; 18 U.S.C. 1701, 1702, 1703(a), 1715-1716)

W. Allen Sanders,

Associate General Counsel.

[FR Doc. 80-40597 Filed 12-30-80; 8:45 am]

BILLING CODE 7710-12-M

ENVIRONMENTAL PROTECTION AGENCY

40 CFR Part 52

[A-3-FRL 1716-8]

Proposed Revision of Pennsylvania State Implementation Plan

AGENCY: Environmental Protection Agency.

ACTION: Proposed rule.

SUMMARY: The Commonwealth of Pennsylvania has submitted a proposed revision to its State Implementation Plan (SIP) to incorporate an Alternative Emission Reduction Option Plan ("bubble"). They have requested that the plan be approved by EPA for the Bristol, Pa. facility owned and operated by the Minnesota Mining and Manufacturing Company (3M). This facility produces coated paper products with 10 paper coaters using a combination of solvent and water based coatings, some of which result in the emissions of volatile organic compounds (VOC). 3M is proposing to install a new coater using innovative solventless technology which will replace an older coater using solvent-based coatings. This proposed alternative emission reduction plan will allow 3M to control VOC sources to a greater degree where control costs are low, and to a lesser degree or not at all where control costs are high, provided that the total emissions from the affected facility are equal to or less than total emissions which would result from control of each source as required under the approved Pennsylvania SIP. A consent order and agreement is being developed to allow a 21 month extension for final compliance with the proposed regulations in order to develop and implement the new solvent technology. The Commonwealth has requested, and EPA has agreed, that this bubble SIP revision be proposed concurrently by EPA and the Department of Environmental Resources (DER) in order to expedite the approval process. Assuming that there are no public comments which would negatively affect the approvability of the bubble, and that the bubble proposal does not change substantively during the public comment period, DER and EPA can then concurrently issue final approval of this bubble plan. However, if this proposal is changed substantively or this proposal is affected negatively by public comment, EPA will repropose this revision.

DATE: Comments must be submitted on or before January 30, 1981.

ADDRESSES: Copies of the proposed SIP revision and the accompanying support documents are available for inspection during normal business hours at the following locations:

U.S. Environmental Protection Agency, Air Programs Branch, Curtis Building, 6th & Walnut Streets, Philadelphia, PA 19106, Attn: Patricia Sheridan (3AH10)

Pennsylvania Department of Environmental Resources Bureau of Air Quality Control, 200 North 3rd Street, Harrisburg, PA 17120, Attn: Mr. James Hambright

Public Information Reference Unit, Room 2922, EPA Library, U.S. Environmental Protection Agency, 401 M Street, SW (Waterside Mall), Washington, D.C. 20460

All comments on the proposed revision submitted on or before January 30, 1981, will be considered and should

be directed to: Mr. David Arnold, Air Programs Branch (3AH12), Air, Toxics and Hazardous Materials Division, U.S. Environmental Protection Agency, Region III, Curtis Building, 10th floor, 6th & Walnut Streets, Philadelphia, PA 19106, Attn: (AH025PA)

FOR FURTHER INFORMATION CONTACT: Mr. David Arnold (3AH12), U.S. Environmental Protection Agency, Region III, Air Programs Branch, Curtis Building, 10th floor, 6th & Walnut Streets, Philadelphia, PA 19106, (215) 597-7936.

SUPPLEMENTARY INFORMATION: The proposed changes to the Pennsylvania regulations were published in the *Pennsylvania Bulletin* on November 15, 1980. The proposed changes will allow the implementation of an Alternative Emission Reduction Option (bubble) plan, in accordance with EPA's "Bubble Policy" published in the Federal Register on December 11, 1979, 44 FR 71780. DER and EPA are processing this proposal concurrently. The public hearing was held by DER on December 17, 1980. All comments received at the hearing and any written comments received by the DER on or before January 16, 1981 will be considered.

The 3M facility has 10 paper coating machines that produce pressure sensitive tapes using solvent and water based coatings. The Commonwealth has adopted regulations requiring a 74% reduction of potential VOC emissions from these coaters by a compliance date of April 9, 1982. This proposal will result in achievement of limitations of VOC emissions equivalent to DER's existing surface coating regulations while still allowing the use of high solvent coatings. This would be accomplished by the replacement of one solvent-based coater with a coater using innovative, solventless technology. The significant reduction in emissions from this coater would offset the emissions from the other sources, which would be controlled to a lesser degree or not at all.

Therefore, this proposal will allow 3M to implement emission controls in the most cost effective manner. The Company estimates its savings in pollution control costs would be $3 million in capital expenditures and up to $1 to $2 million in annual operating and maintenance costs. However, overall emissions will be equal to or less than those allowed under existing regulations which would require compliance by April 9, 1982. Under these regulations, if a company requires additional time to develop and implement low solvent (VOC) technology, when the alternative is the installation of energy intensive incineration or vapor recovery systems to reduce VOC emissions, the DER can grant a company an extension for compliance with the regulations. 3M has requested such an extension in order to develop and implement the new low solvent technology. DER is proposing approval of such an extension until January 1, 1984, with several incremental reductions in the interim period.

The proposed regulation developed to implement this plan will become "Section 128.14, Minnesota Mining and Manufacturing Company, Bristol, Pennsylvania" of the Pennsylvania Air Resources Regulations. Subsection (a) of this Section identifies the facility and the individual sources to which this plan applies. Subsection (b) prohibits VOC emissions from these sources in excess of the following:

Time Period and Tons of VOC

April 10, 1982 to April 9, 1983—8500
April 9, 1983 through December 31, 1983—6300
January 1, 1984 through December 31, 1984—7000
January 1, 1985 through December 31, 1985—6500
After December 31, 1985, annually—3921

Subsection (c) prohibits emissions of VOC's from these sources in excess of the amounts below:

Time Period and Pounds of VOC Per Gallon of Coating (Minus Water)

April 10, 1983 to December 31, 1983 averaged over the entire period—3.20
After December 31, 1983 determined as a seven-day running average—2.92

Subsection (d) allows the use of a 15-day running average instead of the 7-day running average required under Subsection (c), only during periods when the solventless coater is shut down for preventative maintenance. These shutdowns are limited to no more than two discrete 7-day periods in any one calendar year. Subsection (e) relieves this facility from compliance with Section 129.52(b) of Pennsylvania's Air Resources Regulations when it is in compliance with this Section and any conditions contained in the operating permit for this facility. Subsection (f) causes the cancellation of Section 128.14 if any of the sources listed in Subsection (a) are permanently shut down.

In order for DER to determine compliance with these regulations, reporting and testing requirements have been developed as conditions in the operating permit. 3M must develop and implement a record keeping system, by process, for the ten coating processes. Emissions of VOC must be calculated using methods described in the Appendix to the permit for each of the limitations established in Section 128.14. After January 1, 1984, a record of all scheduled outages for preventative maintenance must be kept for the solventless coating process. All records required must be kept for 2 years, and must be available upon request by DER. In addition, test results of potential and actual emissions from all sources in Subsection 128.14(a) must be submitted to DER, and one coating line must be converted exclusively to water based technology, both by April 9, 1982. Finally, semiannual reports are required which document the progress of reductions of VOC emissions from the ten surface-coating processes.

The public is invited to submit, to the address stated above, comments on whether the proposed changes to the regulations should be approved as a revision of the Pennsylvania SIP.

The Administrator's decision to approve or disapprove the proposed revision will be based on the comments received and on a determination of whether the amendments meet the requirements of Section 110(a)(2) of the Clean Air Act and 40 CFR Part 51, Requirements for Preparation, Adoption, and Submittal of State Implementation Plans.

Note.—Under Executive Order 12044 EPA is required to judge whether a regulation is "significant" and therefore subject to the procedural requirements of the Order or whether it may follow other "specialized" procedures. I have reviewed this regulation and determined that it is a specialized regulation not subject to the procedural requirements of Executive Order 12044.

(42 U.S.C. Sections 7401-642)

Dated: December 17, 1980.

Jack J. Schramm,

Regional Administrator.

[FR Doc. 80-43643 Filed 12-30-80; 8:45 am]
BILLING CODE 6560-38-M

DEPARTMENT OF HEALTH AND HUMAN SERVICES

Social Security Administration

45 CFR Part 233

Coverage and Conditions of Eligibility in Financial Assistance Programs Treatment of HUD Housing Subsidies

AGENCY: Social Security Administration, HHS.

ACTION: Proposed rule.

SUMMARY: This proposed regulation provides that in determining eligibility for and the amount of assistance under the AFDC and adult assistance programs, States will be required to treat HUD housing subsidy benefits

furnished to or on behalf of applicants and recipients in a consistent manner so as not to disadvantage a recipient because of the method used to provide the benefits (vendor, in-kind, or direct cash payments). This proposal affects the AFDC program under title IV-A and the adult assistance programs in Guam, Puerto Rico, and the Virgin Islands under titles I, X, XIV, and SVI (AABD) of the Social Security Act.

DATES: Comments must be received on or before March 2, 1981.

ADDRESSES: Prior to final adoption of the proposed regulation, consideration will be given to any comments submitted in writing to the Commissioner of Social Security, Department of Health and Human Services, P.O. Box 1585, Baltimore, Maryland 21203. Copies of all comments received in response to this notice will be available for public inspection during regular business hours at the Washington Inquiries Section, Office of Public Affairs, Social Security Administration, Department of Health and Human Services, Room 1212 Switzer Building, 330 C Street, SW., Washington, D.C. 20201.

FOR FURTHER INFORMATION CONTACT: Mrs. Juanita Henderson, Office of Family Assistance, Social Security Administration, 2100 Second Street SW, Washington, D.C. 20024, telephone (202) (245-2021).

SUPPLEMENTARY INFORMATION:

Background

The Social Security Act requires the State agency administering the AFDC and adult assistance programs to take into account the income and resources of each individual in determining his or her need for assistance and the amount of any assistance under those programs. In general, in meeting this requirement, any benefits an applicant or recipient may use to meet basic subsistence needs covered by an AFDC or adult assistance grant, whether paid by Federal, State, or local governments, are counted unless specifically exempted. Present regulations mandate the disregard of certain types of benefits as a result of specific provisions in the Social Security Act or the enabling acts of the programs providing those benefits. In addition, the current regulations permit the States some flexibility in meeting the needs of their applicants and recipients by allowing the States the option of excluding certain limited types of income and resources from consideration in determining eligibility for and the amount of assistance. For example, States have been permitted to allow applicants and recipients to retain some reserves within Federally prescribed limits, such as a home, car, or income producing property. States may also disregard small amounts of nonrecurring income such as birthday gifts or home garden produce and benefits such as payments for vocational rehabilitation, paid by other agencies and organizations provided that no duplication exists between the assistance paid by the State agency and the other agency. Federal practice also permits States to disregard the value of in-kind benefits and vendor payments, provided to or on behalf of applicants and recipients. Adoption of these latter types of disregards are optional with the States. Many States have included one or more of these options in their State plans.

One type of Federal benefit for which public assistance applicants and recipients are frequently eligible is rent subsidies administered under the authority of the Department of Housing and Urban Development (HUD). The U.S. Housing Act of 1937, as amended, authorizes two basic rent subsidy programs for low income families, the "public housing" program and the "Section 8" program. Families participating in these programs may not be required to pay more than 25 percent of their income for rent and utilities; HUD subsidies make up the remainder of the cost. Under the public housing program, an apartment in a public housing project is provided to the family. Under the Section 8 program, after the family has selected a suitable apartment in the private sector, a State or local public housing agency (PHA) contracts with the owner of the housing and pays him or her on behalf of the eligible family to supplement the rent paid by the family.

Where utility costs are paid by the owner or the housing project and are included in the monthly rental, nothing else is required besides the direct payment to the owner or the furnishing of the apartment in the project in order to furnish the full subsidy amount. However, in those cases where the owner or the housing project does not include the cost of utilities in the monthly rent, the public housing agency establishes a separate monthly utility allowance. The family pays its utility costs directly and the amount of the utility allowance is subtracted from the amount the family is required to pay each month as rent. If the family's monthly utility allowance is greater than the total amount of the family's required contribution for rent and utilities, the family makes no rent payment and the housing agency sends the family a check for the amount of the difference between the utility allowance and the family's required contribution. Thus, under these particular circumstances, the rent subsidy benefit is furnished in part directly to the owner, in the case of Section 8, or by providing an apartment in the housing project, in the case of public housing and in part by a direct case payment to the participating family.

Neither the Social Security Act nor the U.S. Housing Act of 1937, as amended, mandates the exclusion of these HUD rent subsidy benefits in determining eligibility for or the amount of assistance under the AFDC and adult assistance programs. Further, HUD benefits are not specifically mentioned in the AFDC and adult assistance program regulations. However, we have determined that of the 54 States (D.C., Guam, Puerto Rico, and the Virgin Islands are viewed as States for purposes of the regulations), 33 States disregard the subsidy payment in total under one or more of the optional methods for disregarding income described earlier, while 21 States take into account the HUD benefits to at least some degree. Based on their treatment of these benefits, the States can be divided into four groups as follows: (1) States that disregard both in-kind or vendor payments and direct cash payments to applicants and recipients; (2) States that take into account both the in-kind or vendor payment and the direct cash payment to applicants and recipients; (3) States that disregard the in-kind or vendor payment but count any direct cash payments to applicants and recipients; and (4) States that take into account the in-kind or vendor payment but disregard the direct cash payments to applicants and recipients.

The States which take into account the HUD payments (groups (2), (3) and (4)) generally do so in one of two ways. The first is by reducing the assistance grant dollar for dollar by the amount of the subsidy payment (up to the amount included in the grant for rent and utilities in the case of vendor or in-kind benefits). For example, if HUD sends the recipient a check for $30 the State will then reduce the AFDC grant by $30. The second method for taking HUD payments into account involves reducing the standard of need. Under this latter method, the recipient receives less money because, as a result of the HUD subsidy, he or she is determined to have less need. This occurs in States where shelter costs are included in the assistance grant on an "as paid, up to a

maximum basis". Suppose, for example, that in an "as paid" State, the monthly rent for the recipient's apartment is $200 including utilities, that the maximum rent allowance for an assistance grant is $250, and that the amount determined by HUD as the recipient's 25 percent rent and utilities contribution for the Section 8 program is $100. In this situation, the recipient will pay his or her landlord $100 and HUD will pay the landlord the remaining $100. In calculating the recipient's monthly assistance grant the State includes $100 for shelter. The amount of the rent "paid" by the recipient does not include the amount of subsidy paid to the landlord by HUD. Thus, the shelter portion of the grant is reduced to the amount which the recipient actually pays the landlord for rent. In the case where no rent is paid to the landlord, no payment is included in the grant.

Recently both HUD and certain recipient groups have voiced concern about the negative effects that the different treatment resulting from partial disregards of housing subsidy benefits has on public assistance applicants and recipients and on the efficient administration of both the welfare and housing subsidy programs. For example, take the case of a State which disregards in-kind or vendor payments but counts any direct cash payments to the applicant or recipient. In this case, where the housing agency makes a cash payment directly to the recipient, the State agency reduces the monthly assistance grant accordingly. This adjustment by the State agency, which decreases the recipient's total income, results in a recomputation by the PHA of the amount of the HUD cash subsidy payable to the recipient, and this is turn causes another further adjustment of the monthly assistance grant. After several rounds of readjustment by both agencies, the rounding off process used by the housing agency results in no further increases in the HUD subsidy amount. The net effect of this cycle is that the recipient receives the same total amount of cash assistance as he or she did before the HUD subsidy payments were made, but from a slightly different source. In this direct cash payment situation, as distinguished from the situation where all HUD subsidy payments are paid directly to the owner or an apartment if furnished to the family, an applicant or recipient does not realize the full benefit of the HUD subsidy.

Thus, within particular States, two similarly situated applicants or recipients have actually received disparate treatment under the AFDC and adult assistance programs, based solely on whether or not their monthly rent payment includes or excludes the cost of utilities. This distinction depended on the form in which the subsidy payment was made and is highly arbitrary. One applicant or recipient received the full benefit of the housing subsidy while the other received only a partial benefit. No considerations of need were involved in producing this result; in fact, it may have been the poorest families who were denied full benefits most often since their "25 percent of income" rent contribution would necessarily be less than that of a family with greater income and resources. Furthermore, with the ever escalating costs of fuel, we anticipate that the numbers of applicants and recipients who are adversely affected by this difference in the treatment of direct and in-kind or vendor payments will continue to grow.

We propose to deal with this problem by amending the regulations to require States to treat HUD housing subsidy payments in a more uniform manner which assures that applicants and recipients are not denied the benefits of those payments solely because of the manner or form in which the subsidy benefits are calculated or paid. Under this approach States would still retain the option of including or excluding HUD housing benefits in determining eligibility for and the amount of benefits under the AFDC and adult assistance programs. However, once this option is exercised, in implementing its decision the State would be required to treat HUD housing subsidies as a single type of benefit regardless of whether it was paid or provided directly to the applicant or recipient or made on his or her behalf to a third party. This change in the regulations will eliminate the current disparity that exists within certain States and will also eliminate the administrative burden which occurs because of the series of adjustments in the computation of housing subsidy and grant amounts.

Basis of the Change

We are proposing to make this regulatory change for several reasons. First, we believe it furthers the purposes of both the Social Security Act and the U.S. Housing Act of 1937 in assisting needy families. The purpose of the HUD statute to "remedy the unsafe and unsanitary housing conditions and the acute shortage of decent, safe, and sanitary dwellings for families of low income" is clearly consistent with the goals of the public assistance programs to help individuals and families to "maintain and strengthen family life" and to "attain or retain capability for maximum self-support and personal independence." Since both the HUD and the public assistance programs are designed to assist needy persons, the administration of these programs should be coordinated to the maximum extent possible. Consequently, we believe that when HUD discharges its obligation to provide housing and utility subsidy benefits in part by making vendor payments to landlords or furnishing apartments and in part by making direct cash payments to public assistance applicants and recipients, these payments should not be treated in two different ways in determining eligibility for and the amount of assistance under the public assistance programs.

Moreover, the public assistance programs under the Social Security Act have always included in their requirements an underlying standard of equity and uniformity (see 45 CFR 233.20(a)(1)). Basically, this standard has required that classifications included in State plans assure equitable and uniform treatment for all persons who are in the same or very similar circumstances. Under this principle, different treatment of groups of people could only be justified if there was some valid way to distinguish those persons who would not receive benefits from those who would, in the light of the goals of the public assistance programs established by the Social Security Act. While the types of optional disregards selected by those States which only partially exclude HUD housing benefits from consideration in determining eligibility for and the amount of assistance, in all likelihood, were not designed to exclude certain applicants and recipients or to create inequities, that has been the actual effect. The proposed regulation would amend the existing regulations to extend the principle of equitable treatment to this particular situation.

Finally, we view this change as falling within the Secretary's authority to specify rules which are necessary for the proper and efficient administration of the public assistance programs. Essentially, the HUD housing subsidy programs are in-kind or vendor payment programs. With respect to the public housing program, the Secretary of HUD is authorized to "make annual contributions to *public housing agencies* to assist in achieving and maintaining the low-income character of their projects." With respect to the Section 8 program, "the Secretary of HUD is authorized to enter into annual contributions contracts with public housing agencies pursuant to which such

agencies may enter into contracts with *owners of existing dwelling units.*". Direct cash payments are only made in limited circumstances, i.e., where utility costs are not included in the applicant's or recipient's rent and then only when the applicant's or recipient's utility allowance exceeds his or her required rent contribution. We pursued with HUD the possibility of HUD's utilizing a vendor or two party process in lieu of direct payments to applicants and recipients. HUD felt that this approach was administratively difficult and would involve significant additional administrative costs. This is due to the number of different utility companies which furnish services to applicants and recipients and to the way in which utility allowances are first offset against required rent contributions. Also, the utility payments are not based on actual utility costs each month but are a fixed allowance through out the year. Consequently, adjustments to utility companies for underpayments or overpayments would be required. Rather that HUD instituting changes of this magnitude, we believe it is more reasonable and feasible to require States to treat the direct HUD cash payments to public assistance applicants and recipients in a consistent manner as payments made directly to the landlord or utility company are treated or where an apartment is furnished to the family. Additionally, this approach would significantly reduce the administrative costs of both the public assistance and housing programs in those States where several rounds of readjustments are taking place. Such an approach also would reduce the likelihood of errors being made in the computation of assistance grants.

Scope and Effect of the Changes

The proposed regulation covers all housing benefits provided under HUD administered statutes. Although to date we have only identified problems involving the public housing and Section 8 housing subsidy programs, the same problem could occur in other HUD administered housing programs since benefits may be provided both directly to public assistance applicants and recipients or to third parties on their behalf. We see no reason to single out any one type of housing benefit for special consideration. The inclusion of all HUD housing programs in this regulation governing the AFDC and adult assistance programs is consistent with the treatment of all HUD housing program benefits under the Supplementary Security Income program. The proposed regulation will cover any assistance paid with respect to a dwelling unit under the U.S. Housing Act of 1937, as amended, the National Housing Act, section 101 of the Housing and Urban Development Act of 1965, or title V of the Housing Act of 1949.

Under this new provision, States which take into account all HUD housing benefits and States which disregard the value of all HUD housing benefits will not be required to make any changes in their methods of computing monthly assistance grants. However, States which currently disregard the value of HUD housing benefits paid to third parties on behalf of applicants and recipients, or the value of an apartment furnished to the family, but count any payments made directly to applicants and recipients, will be required to change their procedures either to also disregard the direct cash payments or to rescind their State policy regarding the exclusion of in-kind or vendor payments.

States which currently take into account the value of in-kind or vendor payments, generally by paying shelter costs on an "as paid up to a maximum" basis, but disregard direct cash payments, will have to examine their practices to determine whether or not their method of treating housing subsidy benefits results in applicants and recipients being treated differently based on the form in which the benefits are provided. For example, take the case of the Smith and the Jones families who live in the same State and are eligible for both AFDC and the Section 8 program. Under the AFDC program, the State sets different maximum shelter allowances depending on whether or not utilities are included in the monthly rent. Where utilities are not included in the rent, the State includes an amount for utilities in the non-shelter portion of the grant. Assume that the Smith family's utilities are included in their rent, that the State will pay up to $155 for shelter (including utilities) and that the State includes $217 for other needs in its AFDC grant for a maximum of $372 for a family of four. Assume further that HUD has determined the family's maximum required rent and utility contribution under the Section 8 program to be $75. In this case, the Smith family will pay their landlord $75 and will receive an AFDC grant of $75 + $217 or $292. HUD will pay the landlord the balance of the rent directly. The Smith family receives the full benefit of the HUD subsidy since their rent and utility contribution does not exceed the maximum set for them by HUD. On the other hand, assume that the Jones family's utilities are not included in their rent and cost $100 a month. Assume that the same State will pay up to $125 for shelter and includes $267 for other needs (including utilities) in its AFDC grant for a maximum of $392 for a family of four. Assume further that HUD has determined the Jones family's maximum required rent and utility contribution under the Section 8 program to be $80 and that the utility allowance for families that pay their own utilities is $100. In this case, the utility allowance exceeds the Jones' required contribution by $20, so HUD pays the entire rent cost and sends the family a check for $20 to assure that the family's contribution does not exceed $80. The family is responsible for paying for its own utility bill. Since the family pays no rent to the landlord, no amount is included in the AFDC grant for shelter. Since the State currently disregards the HUD cash payment in determining the amount of the AFDC grant, the Jones family receives the full maintenance amount of $267. Thus, the family has a total income of $287 ($267 + $20). Because the State disregards the direct cash payment, the Jones family's required contribution for rent and utilities does not exceed the maximum established for them by HUD. Consequently, the Jones family also receives the full benefit of the HUD subsidy. However, if the State were to change its policy and reduce the AFDC grant to the Jones family by the amount of the direct HUD cash payment, they would be disadvantaged since their actual contribution would exceed the maximum set by HUD. In that case, the Jones family would receive less than a full HUD subsidy benefit and the difference would have been due to the manner of payment (i.e., part vendor payment and part direct cash payment). Thus, under the new regulation, in order to assure that families receiving direct cash payments are limited to paying only the required contribution, as are families whose utilities are included in their rent, the State must continue to disregard the direct cash payments.

This regulation is to be issued under the authority contained in section 1102 of the Social Security Act, as amended, 49 Stat. 627, as amended, 49 Stat. 647 as amended; 42 U.S.C. 1302.

(Catalog of Federal Domestic Assistance Program No. 13.808, Public Assistance—Maintenance Assistance (State Aid).)

Dated: December 15, 1980.

William J. Driver,

Commissioner of Social Security.

Approved: December 23, 1980.

Patricia Roberts Harris,

Secretary of Health and Human Services.

Chapter II of Title 45 of the Code of Federal Regulations is amended as set forth below:

Section 233.20 is amended by adding a new paragraph (a)(3)(xi) to read as follows:

§ 233.20 Need and amount of assistance.

(a) *Requirements for State Plans.*

* * *

(3) *Income and resources: OAA, AFDC, AB, APTD, AABD.*

* * * * *

(xi) Provide that in determining eligibility for an assistance payment or the amount of the payment, any benefits received by applicants and recipients under a housing program administered by the Department of Housing and Urban Development pursuant to the U.S. Housing Act of 1937, as amended, the National Housing Act, section 101 of the Housing and Urban Development Act of 1965, or title V of the Housing Act of 1949, will be considered by the State agency in a uniform manner regardless of whether the benefits are provided in the form of vendor, in-kind, or direct cash payments, to assure that applicants and recipients are not denied the benefits of those payments solely because of the manner or form in which they are calculated or paid.

* * * * *

[FR Doc. 80-40621 Filed 12-30-80; 8:45 am]

BILLING CODE 4110-07-M

LEGAL SERVICES CORPORATION

45 CFR Part 1612

Restrictions on Certain Activities

AGENCY: Legal Services Corporation.

ACTION: Proposed amendment.

SUMMARY: Section 1007(a)(5)(A) of the Legal Services Corporation Act, 42 U.S.C. 2996f, requires the Corporation to ensure that funds awarded to recipients are not used for legislative advocacy unless such advocacy is a necessary part of the representation of an eligible client, at the request of a legislative body, or in connection with a measure which directly affects the activities of the recipient or the Corporation under the provisions of the Act. On July 28, 1978, the Corporation promulgated Part 1612, § 1612.4 in order to implement the limitations of the Act. After some experience with these provisions, it has become necessary to impose new requirements in order to ensure the day-to-day observance of these limitations by recipients.

DATES: Comments must be received on or before January 30, 1981.

ADDRESS: Legal Services Corporation, 733 15th Street NW., Suite 700, Washington, D.C. 20005.

FOR FURTHER INFORMATION CONTACT: Linda Hanten, 202-272-4010.

SUPPLEMENTARY INFORMATION: These proposed requirements are part of an overall effort to ensure that all recipient legislative advocacy is conducted in compliance with the congressionally imposed restrictions. In addition to promulgating these regulatory changes, the Corporation is focusing on monitoring and training to ensure that recipients are aware of and understand congressional limitations on legislative advocacy. Further, a formal complaint procedure is being initiated so that complaints of impermissible legislative advocacy will be resolved in a consistent and timely manner.

The first proposed addition to Part 1612, § 1612.4(b), will require recipients to implement a system under which appropriate documentation will be secured before any legislative advocacy is undertaken by an employee. If legislative advocacy is to be undertaken on behalf of an eligible client, the recipient will secure an agreement in writing or other appropriate documentation specifically authorizing such representation. Similarly, if the recipient has been requested by a member or a committee of the legislature to engage in legislative advocacy, the request must be appropriately documented. Finally, if legislative advocacy is undertaken because of possible legislation directly affecting the activities of a recipient, the executive or program director will authorize the initiation of such advocacy in writing. Recipients will further be required to notify their staff of this system of prior authorization for legislative advocacy and to insure that it is complied with.

A second proposed addition to § 1612.4, § 1612.4(c) will prohibit programs from establishing legislative offices until the recipient's board of directors, primarily composed of attorneys, approves such an action consistent with the program's priorities, the attorneys' professional responsibility and as an economical and efficient approach to meeting clients' needs for legislative representation.

Finally, because of the proposed amendments, it will be necessary to redesignate current § 1612.4(b) as § 1612.4(d).

The proposed amendments are as follows:

Section 1612.4 is amended by redesignating paragraph (b) as (d) and adding new paragraphs (b) and (c) to read as follows:

§ 1612.4 [Amended]

* * * * *

(b) Recipients shall adopt appropriate procedures and forms to document that the legislative activities in which they engage fall within the activities permitted in § 1612.4(a).

(c) Recipients may not establish full time legislative offices unless the decision to establish such an office is formally made by the Board of Directors of the recipient consistent with the provisions of Section 1620, provided that the legislative activities of these offices are solely activities permitted under § 1612.4(a).

* * * * *

Mario Lewis,

General Counsel, Legal Services Corporation.

[FR Doc. 80-40670 Filed 12-30-80; 8:45 am]

BILLING CODE 6820-35-M

DEPARTMENT OF THE INTERIOR

Fish and Wildlife Service

50 CFR Part 12

Seizure and Forfeiture Procedures: *Posting of Notices of Proposed Forfeiture*

AGENCY: Fish and Wildlife Service, Interior.

ACTION: Proposed rule.

SUMMARY: The Service proposes to revise § 12.23 of 50 CFR Part 12, entitled "Administrative forfeiture proceedings". The revision would raise the monetary value of seized property which may be the subject of notice by posting from $250 to $1000. In addition, present regulations requiring posting in both the Service's enforcement office and the United States District Court would be revised to allow posting in either location as well as in the United States Customhouse. The revisions reflect the increasing value of seized property as well as of alternative forms of publication, and, in some instances, the impracticability of posting in United States District Courts.

DATES: Comments from the public must be received on or before January 30, 1981.

ADDRESSES: Comments may be mailed to the Director [LE], Fish and Wildlife

Service, P.O. Box 28006, Washington, D.C. 20005 or delivered weekdays to the Division of Law Enforcement, U.S. Fish and Wildlife Service, Suite 300, 1375 K Street, NW, Washington, D.C. 20005, between 7:45 a.m. and 4:15 p.m. Comments should bear the notation REG 12-02-4. All materials received may be inspected at the Service's office in Suite 300, 1375 K Street, NW between 7:45 a.m. and 4:15 p.m.

FOR FURTHER INFORMATION CONTACT: Patricia S. Bangert, Office of the Solicitor, U.S. Department of Interior, Washington, D.C. 20240. Telephone: 202-343-2172.

SUPPLEMENTARY INFORMATION:

Background

A number of fish and wildlife conservation statutes administered by the Service provide for forfeiture to the United States of wildlife, plants and other property involved in the violation of the laws. This is generally accomplished by the Solicitor's Office of the Department of the Interior requesting that the Attorney General file a civil action to obtain forfeiture of such property. However, property subject to forfeiture under the Eagle Protection Act, 16 U.S.C. 668 *et seq.*, or the Airborne Hunting Act, 16 U.S.C. 742j-1, or any wildlife or plant subject to forfeiture under the Endangered Species Act, 16 U.S.C. 1531 *et seq.* which is determined to have a value of not greater than $10,000 may be forfeited by means of administrative proceedings, the basis for which is the Tariff Act of 1930, 19 U.S.C. 1602-1624.

In administrative forfeiture proceedings, the Solicitor must issue a notice of proposed forfeiture. This notice must issue a notice of proposed forfeiture. This notice must be published once a week for at least three successive weeks in a newspaper of general circulation in the locality where the property was seized. However, under the present regulations, if the value of the seized property is determined to be less than $250, the notice may be issued by posting, rather than by newspaper publication, for at least three successive weeks in a conspicuous place accessible to the public at the Service's enforcement office and the United States District Court nearest the place of seizure. The Service proposes to revise the monetary limit of seized property for which notice may be accomplished by posting and the locations at which posting may take place.

Increasing costs of newspaper publishing have made the $250 limit on the value of property for which notice may be given by posting unrealistic. For the large number of items valued at slightly more than $250, the cost of publishing a notice of proposed forfeiture in a large urban newspaper is often nearly as great or greater than the value of the item. Furthermore, inflation has rapidly made the valuation figure of $250 obsolete and has significantly reduced the number of seized items that qualify for the notice by posting process. Therefore, the Service proposes the more realistic figure of $1,000 as the limit of the value of property which may be subject to notice by posting.

Furthermore, the Service has found that the requirement that notice be posted in the Service's enforcement office *and* the United States District Court is impractical in some cases. For example, some District Courts do not allow the posting of such notices in the Courthouse. Therefore, the Service proposes to revise the regulations by allowing posting to take place alternatively in the Service's enforcement office, the United States District Court, *or* the United States Customhouse nearest the place of seizure.

Public Comments Invited

The policy of the Department of the Interior is, whenever practicable, to afford the public an opportunity to participate in the rulemaking process. Interested persons are invited to submit written comments regarding the proposed rule. These comments and any additional information received will be considered by the Director in adopting a final rule. Correspondence should be mailed or delivered to the address given at the beginning of this proposal.

The principal author of these regulations is Patricia S. Bangert, Office of the Solicitor, Department of the Interior. (202/343-2172.)

Note.—The Department of the Interior has determined that this document is not a significant rule and does not require a regulatory analysis under Executive Order 12044 and 43 CFR Part 14.

Regulations Promulgation

For the reasons set out in the preamble, it is hereby proposed to amend Part 12 of Subchapter B of Chapter I of Title 50 of the Code of Federal Regulations as set forth below.

PART 12—SEIZURE AND FORFEITURE PROCEDURES

1. The authority citation for Part 12 reads as follows:

Authority: Act of September 6, 1966, 5 U.S.C. 301; Bald and Golden Eagles Protection Act, 16 U.S.C. 668-668b; National Wildlife Refuge System Administration Act, 16 U.S.C. 668dd(e)-(f); Migratory Bird Treaty Act, 16 U.S.C. 706-707; Migratory Bird Hunting Stamp Act, 16 U.S.C. 718f-718g; Fish and Wildlife Act of 1956 [Airborne Hunting Amendments], 16 U.S.C. 742j-1(d)-(f); Black Bass Act, 16 U.S.C. 852d-853; Marine Mammal Protection Act of 1972, 16 U.S.C. 1375-1377, 1382; Endangered Species Act of 1973, 16 U.S.C. 1540; Lacey Act, 18 U.S.C. 43, 44; Tariff Act of 1930, 19 U.S.C. 1602-1624.

2. In Part 12, paragraph (b)(1)(A) of § 12.23 is revised to read as follows:

§ 12.23 Administrative forfeiture proceedings.

* * * * *

(b) *Procedure*—(1) *Notice of proposed forfeiture.* As soon as practicable following seizure, the Solicitor shall issue a notice of proposed forfeiture.

(A) *Publication.* The notice shall be published once a week for at least three successive weeks in a newspaper of general circulation in the locality where the property was seized. If the value of the seized property as determined under § 12.12 does not exceed $1,000, the notice may be published by posting, instead of newspaper publication, for at least three successive weeks in a conspicuous place accessible to the public at the Service's enforcement office, the United States District Court or the United States Customhouse nearest the place of seizure. In cases of posting, the date of initial posting shall be indicated on the notice. In addition to newspaper publication or posting, a reasonable effort shall be made to serve the notice personally or by registered or certified mail, return receipt requested, on each person whose whereabouts and interest in the seized property are known or easily ascertainable.

Dated: December 18, 1980.

Lynn A. Greenwalt,

Director, Fish and Wildlife Service.

[FR Doc. 80-40018 Filed 12-30-80; 8:45 am]

BILLING CODE 4310-55-M

---

50 CFR Part 29

Surface Management of National Wildlife Refuge System Lands Under the U.S. Mining Laws

AGENCY: U.S. Fish and Wildlife Service, Interior.

ACTION: Proposed rules.

SUMMARY: This proposed rulemaking sets forth rules and procedures to minimize adverse environmental impacts on the fish and wildlife and habitat resources of the National Wildlife Refuge System from operations authorized by the U.S. mining laws (30 U.S.C. 22-54). The proposal, however, would not cover refuges in Alaska. Such operations include hardrock and placer

mining of locatable minerals such as gold, lead, silver, and uranium, but do not include mineral leasing, such as for coal, oil or gas or saleable minerals such as sand and gravel. These rules are modeled after those the Bureau of Land Management promulgated for their areas of environmental concern (43 FR 78902). These rules would apply to all mining operators on refuge lands, and require a plan of operations to be filed for operations which cause more than negligible impacts.

DATE: Comments must be received no later than March 31, 1981.

ADDRESS: Send Comments to: William C. Reffalt, Chief, Division of Refuge Management, U.S. Fish and Wildlife Service, Room 2349, Department of the Interior, 18th and C Sts., N.W., Washington, D.C. 20240. A public file will be available at this address.

FOR FURTHER INFORMATION CONTACT: William C. Reffalt, Chief, Division of Refuge Management, U.S. Fish and Wildlife Service, Department of the Interior, 18th and C Sts., N.W., Washington, D.C. 20240. Telephone (202) 343-4791.

SUPPLEMENTARY INFORMATION: The Fish and Wildlife Service is seeking public input on its proposed decision to promulgate surface management rules for mining operations on National Wildlife Refuges authorized by the U.S. mining laws, including the Mining Law of 1872. Due to the recent passage of the Alaska National Interest Lands Conservation Act, Pub. L. 96-487, mining operations on Alaska refuges are not included in this proposal, but will be covered later in a comprehensive rulemaking for Alaska refuges.

Refuges, including those in Alaska, contain in total approximately one-tenth of one percent of all mining claims located under the U.S. mining laws, or roughly 500 to 1700 claims. Current information indicates there are several hundred claims on Kofa National Wildlife Refuge in Arizona, 500 to 1000 claims on Sheldon National Wildlife Refuge in Nevada, and about 500 in Alaska. This number is not expected to grow appreciably since virtually all refuges were withdrawn from the operation of the mining laws when they were created.

The proposed rules do not prescribe particular mining methods. Rather they provide a general framework for controlling the environmental impacts of mining operations on refuge system lands while not placing undue burdens on the mining operator.

The rules would require contemporary reclamation of disturbed areas and site-specific environmental impact documents in the process of approving a plan of operations. Similar rules have already been adopted by the National Park Service, Bureau of Land Management, and Forest Service.

Authorities

Section 2319 of the Revised Statutes (30 U.S.C. 22 *et seq.*) provides that exploration, location, and purchase of valuable mineral deposits, under the mining laws, on federal lands shall be "under regulations prescribed by law," and section 2478 of the Revised Statutes, as amended (43 U.S.C. 1201), provides that those regulations shall be issued by the Secretary. See also 30 U.S.C. 21a.

The Act of July 23, 1955 (30 U.S.C. 612), provides that rights under mining claims located after July 30, 1955, shall prior to issuance of patent therefor, be subject to the right of the United States to manage and dispose of the vegetative surface resources and to manage other surface resources. The Act also provides that, "Any mining claim hereafter located under the mining laws of the United States shall not be used, prior to issuance to patent therefor, for any purposes other than prospecting, mining, or processing operations and uses reasonably incident thereto."

The National Wildlife Refuge System Administration Act, (16 U.S.C. 668dd-668ee) constitutes the "Organic Act" for the National Wildlife Refuge System. The Secretary is authorized to permit uses of the area, including rights-of-way, provided such uses are compatible with the purposes for which such areas were established. The Act provides that the mining laws shall continue to apply to any lands within the System to the same extent they applied prior to October 15, 1966, unless subsequently withdrawn.

The Fish and Wildlife Act of 1956, as amended, (16 U.S.C. 742a-742j) authorizes the Secretary to take such steps as may be required for the development, advancement, management, conservation, and protection of fish and wildlife resources.

Plan of Operation. The basic management tool proposed in these regulations is the "plan of operations", which is required for all operations which create more than negligible impacts. The operator must provide claim identification data, as well as a description of measures to be taken to protect fish and wildlife and habitat resources and to reclaim disturbed areas. On refuge areas withdrawn from the mining laws, mineral information is required in order to judge the validity of the claim. Such information is only required for unpatented claims on the federal lands, and will not be required for any state claims on state lands. New operations cannot proceed until the plan is approved, other than to the extent necessary to fulfill requirements of federal and state law; existing operations are given 120 days in which to submit a plan. The authorized officer will normally act on a plan within 30 days. The plan will be approved if it provides for protection of fish and wildlife and habitat resources, compliance with mandatory environmental protection laws, and for adequate reclamation measures.

The authorized officer of the FWS will prepare an environmental assessment or impact statement, as appropriate, to address the impacts which would result from the proposed operations.

Casual Use. Operations which do not create any appreciable disturbance or damage to fish and wildlife or habitat resources may proceed without a plan of operations. The authorized officer will issue such users a special use permit which contains the determination that the proposed use falls within this category.

Bonding. Bonding is not required for casual use operations, but is required for operations subject to a plan of operations.

Reclamation includes reshaping the land disturbed by operations to its approximate original contour or to an appropriate contour considering the surrounding topography, as determined by the authorized officer. Additionally, stream banks are to be stabilized, wastes safely disposed of, and the area revegetated with native species.

Patented Claims. Patented claims within the refuge boundaries are covered only if the operations are causing significant harm to the surrounding refuge system lands. A plan of operations may be required if the operations are significantly harming the lands.

National Environmental Policy Act Considerations

FWS has prepared an environmental assessment which addresses the impacts of the regulatory provisions as well as the changes from BLM's rules that are being made and has determined that there will be no significant impacts to the human environment. A Finding of No Significant Impact (FONSI) was prepared. Both the EA and FONSI are available for review at the Office of the Division of Refuge Management, U.S. Fish and Wildlife Service, Washington, D.C. FWS proposes to adopt applicable parts of the Final Environmental Impact Statement (FEIS) prepared for BLM's rules (August, 1980), since FWS's rules are very similar to BLM's, would have similar impacts, and since the draft BLM

EIS originally covered wildlife refuges as well as public lands.

The Service held a scoping meeting on November 5, 1980, and two organizations submitted comments at that stage. One commenter suggested that a non-regulatory approach be implemented. The Service believes these regulations are designed to minimize regulatory burdens while achieving important protection of refuge resources. The other organization requested the rules maximize the opportunity for public input, and suggested that various protective provisions of the BLM rules and Forest Service rules be adopted.

The primary authors of this proposal are Wallace Evans and Byron Swift. In accordance with Executive Order 12044 and 43 CFR 14, it was determined that the proposed amendments (the proposed rules) to 50 CFR 29 are not significant and a separate regulatory analysis is not required.

Dated: December 29, 1980.

Robert Herbst,

Assistant Secretary for Fish and Wildlife and Parks.

Subpart D is added to 50 CFR Part 29 to read as follows:

PART 29—LAND USE MANAGEMENT

Subpart D—Surface Management of Mining Claims

Sec.

29.40-1 Purpose and policy.
29.40-2 Definitions.
29.40-3 Recordation.
29.40-4 Scope.
29.41-1 Reclamation.
29.41-2 Casual use.
29.41-3 Plan of operations.
29.41-4 Plan approval.
29.41-5 Modification of plan.
29.41-6 Existing operations.
29.41-7 Bonding requirements.
29.42-1 Environmental assessment.
29.42-2 Other requirements for environmental protection.
29.43-1 Noncompliance.
29.43-2 Access.
29.43-3 Fire prevention and control.
29.43-4 Maintenance and public safety.
29.43-5 Inspection.
29.43-6 Notice of suspension of operations.
29.43-7 Cessation of operations.
29.44 Patented claims.
29.45 Appeals.
29.46 Public availability of information.

Authority: The Mining Law of 1872, as amended, 30 U.S.C. 21 *et seq.;* The Act of July 23, 1955, 30 U.S.C. 612; The Fish and Wildlife Act of 1956, as amended, 16 U.S.C. 742a *et seq.;* The National Wildlife Refuge System Administration Act, 16 U.S.C. 668dd *et seq.*

Subpart D—Surface Management of Mining Claims

§ 29.40-1 Purpose and policy.

The purpose of this subpart is to establish procedures to protect fish and wildlife and habitat resources of refuge system lands which may result from operations authorized by the mining laws of the United States.

The policy of the Department of the Interior is to permit the development of the federal locatable mineral resources pursuant to the mining laws, eliminate invalid claims on withdrawn lands, minimize damage to the environment and other resource values, and provide for reclamation of disturbed lands.

§ 29.40-2 Definitions.

As used in this subpart, the term:

(a) "Authorized Officer" means any employee of the U.S. Fish and Wildlife Service to whom authority has been delegated to perform the duties described in this subpart.

(b) "Casual Use" means activities limited to practices which do not lead to any appreciable disturbance or damage to refuge system lands, and resources. For example, activities are generally considered "casual use" if they do not involve the use of mechanized earth moving equipment or explosives or do not involve the use of motorized vehicles except over established and open roads.

(c) "Mining claim" means any unpatented mining claim, millsite, or tunnel site located under the mining laws on refuge system lands.

(d) "Mining laws" means, including among others, the Lode Law of July 26, 1866, as amended (14 Stat. 251); the Placer Law of July 9, 1870, as amended (16 Stat. 217); the Mining Law of May 10, 1872, as amended (17 Stat. 91); the Building Stone Act of August 4, 1892, as amended (27 Stat. 348); the Saline Placer Act of January 31, 1901 (31 Stat. 745).

(e) "Operations" means all functions, work, facilities, and activities in connection with prospecting, exploration, development, extraction, and processing of mineral deposits locatable under the mining laws and all other uses reasonably incident thereto, whether on a mining claim or not, including but not limited to the construction of roads, transmission lines, pipelines, and other means of access for support facilities across refuge system lands. Operations do not include activities on claims which have been patented under the mining laws, which are covered separately in section 29.44.

(f) "Operator" means a person conducting or proposing to conduct operations.

(g) "Person" means any citizen of the United States or person who has declared the intention to become such and includes any individual, club, partnership, corporation, association, or other legal entity.

(h) "Project area" means a single tract of land upon which an operator is, or will be, conducting operations, as determined by the authorized officer. It may include one mining claim or a group of mining claims under one ownership on which operations are or will be conducted as well as refuge lands on which an operator is exploring or prospecting prior to locating a mining claim.

(i) "Protection of fish and wildlife and habitat resources" means conducting operations in a manner which uses reasonable and available methods and equipment which reduce to minimum practical levels impacts on fish and wildlife and habitat resources on the refuge system lands.

(j) "Reclamation" means taking such reasonable measures which will protect fish and wildlife and habitat resources of the refuge system lands, including reshaping land disturbed by operations to its approximate original contour or to an appropriate contour considering the surrounding topography, as determined by the authorized officer, preventing subsidence, stabilizing stream banks and preventing acid drainage or other contaminants from entering area streams, and revegetating disturbed areas so as to provide a diverse vegetative cover of native species, where feasible.

(k) "Refuge system lands" means federal lands, waters, and interests of the National Wildlife Refuge System administered by the U.S. Fish and Wildlife Service as wildlife refuges, wildlife ranges, wildlife management areas, waterfowl production areas, and other areas for the protection and conservation of fish and wildlife, including those that are threatened with extinction.

(l) "Regional Director" means the Regional Director of the U.S. Fish and Wildlife Service having jurisdiction over the refuge system lands in which the operations are located.

§ 29.40-3 Recordation.

Unpatented claims on refuge system lands remain subject to § 314 of the Federal Land Policy and Management Act of 1976 and therefore must be recorded with the Bureau of Land Management in accordance with the provisions of 43 CFR 3833.1-2. Any

unpatented claim on federal lands not recorded pursuant to the provisions of 43 CFR 3833 shall be conclusively presumed to be abandoned and shall be void.

§ 29.40-4 Scope.

(a) These regulations apply to all operations conducted on refuge system lands except for refuge system lands in Alaska.

(b) On refuge system lands which have been withdrawn from the operation of the mining laws, all operations other than access across refuge lands must be conducted on valid existing claims.

§ 29.41-1 Reclamation.

All operations, whether conducted as a casual use or under a plan of operations, shall be reclaimed as required in this title.

§ 29.41-2 Casual use.

No plan of operations is required for casual use operations. The Fish and Wildlife Service will determine on a case-by-case basis what constitutes a casual use operation and will document this determination. Casual use operations are subject to monitoring and oversight by the authorized officer to ensure the protection of fish and wildlife and habitat resources.

§ 29.41-3 Plan of operations.

(a) Except for casual use operations an approved plan of operations is required prior to commencing any operation on refuge system lands.

(b) A plan of operations must be filed in the Refuge Office of the Fish and Wildlife Service having jurisdiction over the refuge system lands in which the claim(s) or project area is located.

(c) No special form is required for filing a plan.

(d) The plan shall include:

(1) The name, mailing address, and phone number of the operator (and claimant if not the operator). Any change of operator or change in the mailing address shall be promptly reported to the authorized officer;

(2) A map, preferably a topographic map, or sketch showing existing and/or proposed routes of access, aircraft landing areas, or other means of access, and size of each area where surface disturbance will occur;

(3) The name of the mining claim(s) and mining claim serial numbers assigned to the mining claim(s) recorded with the Bureau of Land Management pursuant to Title 43 of the Code of Federal Regulations, Part 3833;

(4) Information sufficient to describe or identify the type of operations proposed, how they will be conducted and the period during which the proposed activity will take place;

(5) Measures to be taken to protect fish and wildlife and habitat resources, a statement of the impact which the operations will have on such resources, and measures to reclaim disturbed areas resulting from the proposed operations. Where the operator considers different mining or reclamation methods the operator shall describe the different impacts of the various methods on the fish and wildlife and habitat resources. Where an operator does not have the necessary technical resources to develop such measures, the authorized officer may, in conjunction with the operator, develop such measures. If an operator submits reclamation measures, the authorized officer will ensure that the operator's plan is sufficient to protect fish and wildlife and habitat resources. All reclamation measures developed by the operator or by the authorized officer in conjunction with the operator, shall become a part of the plan of operations.

(e) Where mining claims are located on refuge lands which have been withdrawn from the effect of the mining laws, information regarding the validity of the mining claim shall be required. This information shall include:

(1) The quantity of measured or estimated reserves on the claim remaining to be mined (e.g. cubic yards, tons, etc.) plus a description of any tests conducted or documents which support this estimation of quantity;

(2) the grade or quality of the reserves on the claim remaining to be mined (e.g., ounces per cubic yard, assay, etc.) plus a description of any tests conducted or documents which support this estimation of grade or quality;

(3) if there has been any production from the claim, the last year in which there was any production, the amount of production, and the person or company to whom the ore or concentrates were shipped.

§ 29.41-4 Plan approval.

(a) The authorized officer shall promptly notify the operator whether the plan of operations is adequate to permit assessment of the impacts. If the plan is adequate for that purpose, the authorized officer shall, within sixty (60) days of receipt, analyze the adequacy of the proposal to protect fish and wildlife and habitat resources and provide for reasonable reclamation. Minimum standards are:

(1) All tailings, dumps, deleterious materials or substances, and other waste produced by the operations shall be disposed of so as to protect fish and wildlife and habitat resources.

(2) The operator shall reclaim the area disturbed as soon as possible, and in no instance later than 6 months without written approval of the authorized officer, following each stage of operations by taking reasonable measures to prevent or control on-site or offsite damage of refuge system lands. Revegetation must be commenced within the 6 month period, but is not completed until the authorized officer determines it is likely to be successful.

(3) Reclamation shall include, but shall not be limited to:

(i) saving of topsoil for final application after reshaping of disturbed areas has been completed;

(ii) measures to control erosion, landslides, and water runoff;

(iii) measures to isolate, remove, or control toxic materials;

(iv) reshaping the area disturbed, application of the topsoil, and revegetation of disturbed areas, where reasonably practicable; and

(v) rehabilitation of fisheries and wildlife habitat affected by the operations.

(4) When reclamation of the disturbed area has been completed, the authorized officer shall be notified so that an inspection of the area can be made.

(b) The authorized officer shall notify the operator within the sixty (60) day period:

(1) That the plan is approved by the Regional Director; or

(2) Of any changes in or additions to the plan necessary to meet the requirements of these regulations; or

(3) That the plan is being reviewed, but that more time, not to exceed an additional sixty (60) days, is necessary to complete the review, setting forth the circumstances which require and which justify additional time for review. However, the number of days during which the area of operations is inaccessible for inspection shall not be counted when computing the sixty (60) day period; or

(4) That the plan cannot be approved until thirty (30) days after a final environmental statement has been prepared and filed with the Environmental Protection Agency; or

(5) That the plan cannot be approved until the authorized officer has complied with section 106 of the National Historic Preservation Act or section 7 of the Endangered Species Act.

(c) The authorized officer shall undertake an appropriate level of cultural resource inventory of the area to be disturbed. The inventory shall be completed within the time allowed by these regulations for approval of the

plan (normally 60 days). The operator is not required to do or to pay for an inventory but may do so in order to complete the inventory more expeditiously. The responsibility for and cost of salvage of cultural resources discovered during the inventory shall be the Federal Government's. The responsibility of avoiding adverse impacts on those cultural resources discovered during the inventory shall be the operator's.

(d) Pending final approval of the plan, the authorized officer may approve any operations that may be necessary for timely compliance with requirements of Federal and State laws subject to any terms and conditions that may be needed to protect fish and wildlife and habitat resources.

(e) The transfer of a plan from the claimant to another person shall become effective only after the transferee has satisfied the requirements of § 29.41-7 of this title as it relates to bonding.

(f) The approval of a plan of operations shall not be interpreted as excusing the operator from compliance with other existing State or Federal laws applicable to mining operations, and shall not be deemed to render valid any mining claim which is not otherwise valid under applicable law. Accordingly, the approval of a plan of operations shall not be deemed a waiver of the Secretary's authority to examine, and where appropriate to contest, the validity of unpatented claims.

§ 29.41-5 Modification of plan.

(a) If the development of a plan for an entire operation is not possible, the operator shall initially file a plan setting forth his proposed operation to the degree reasonably foreseeable at that time. Thereafter, the operator shall file a supplemental plan or plans prior to undertaking any operations not covered by the initial plan.

(b) A modification of an approved plan must be reviewed and approved by the authorized officer in the same manner as the initial plan, including approval by the Regional Director.

§ 29.41-6 Existing operations.

(a) Persons conducting operations on the effective date of these regulations, who would be required to submit a plan of operations under § 29.41-3 of this title may continue such operations but shall, within 120 days after the effective date of these regulations submit a plan. Upon a showing of good cause, the authorized officer may grant an extension of time, not to exceed an additional 180 days, to submit a plan.

(b) Ongoing operations may continue according to the submitted plan during its review. If the authorized officer determines that operations are not being conducted in a manner that protects the fish and wildlife and habitat resources of the refuge system lands involved, the authorized officer shall advise the operator of those reasonable and available measures needed to avoid such impacts, and the operator shall take all necessary steps to implement those measures within a reasonable time recommended by the authorized officer. During the period of an appeal, if any, operations may continue without change, subject to other applicable Federal and State laws.

(c) Upon approval of a plan by the authorized officer, operations shall be conducted in accordance with the approved plan.

§ 29.41-7 Bonding requirements.

(a) No bond shall be required for casual use operations.

(b) Any operator who conducts operations under an approved plan of operations shall be required to furnish a bond in an amount specified by the authorized officer. In determining the amount of the bond, the authorized officer shall consider the estimated cost of reasonable reclamation of areas disturbed.

(c) In lieu of a bond, the operator may deposit and maintain in a Federal depository account of the United States Treasury, as directed by the authorized officer, cash or a suitable security interest in an amount equal to the required dollar amount of the bond or negotiable securities of the United States having a market value at the time of deposit of not less than the required dollar amount of the bond.

(d) In place of the individual bond on each separate operation, an operator may proceed under a blanket bond covering statewide or nationwide operations, if the terms and conditions, as determined by the authorized officer, are sufficient to comply with these regulations.

(e) In the event that an approved plan is modified in accordance with § 29.41-5 of this title, the authorized officer shall review the initial bond for adequacy and, if necessary, adjust the amount of the bond to conform to the plan as modified.

(f) When all or any portion of the reclamation has been completed in accordance with the approved plan, the operator shall notify the authorized officer who shall promptly inspect the reclaimed area with the operator. The authorized officer shall than notify the operator, in writing, whether the reclamation is acceptable. When the authorized officer has accepted as completed any portion of the reclamation, the authorized officer shall authorize that the bond be reduced as appropriate to cover the remaining reclamation to be accomplished.

(g) When a mining claim is patented, the authorized officer shall release the operator from that portion of the performance bond which applies to operations within the boundaries of the patented land. The authorized officer shall release the operator from the remainder of the performance bond, including the portion covering approved means of access outside the boundaries of the mining claim, when the operator has completed acceptable reclamation. However, access to patented mining claims shall continue to be regulated under the approved plan.

§ 29.42-1 Environmental assessment.

(a) The authorized officer shall prepare an environmental assessment which covers a plan of operations or a significant modification of the plan, in order to identify the impacts of the proposed operations on the lands and to determine whether an environmental impact statement is required.

(b) In conjunction with the operator, the authorized officer shall use the environmental assessment to determine the adequacy of any mitigating measures and reclamation procedures included in the plan for the protection of the fish and wildlife and habitat resources. If an operator is unable to prepare mitigating measures, the authorized officer, in conjunction with the operator, shall use the environmental assessment as a basis for developing such measures.

(c) If, as a result of the environmental assessment, the authorized officer determines that there is substantial public interest in the plan, the authorized officer shall notify the operator, in writing, that an additional period of time, not to exceed the additional 60 days provided for approval of a plan in § 29.41-4(b) of this title, is required to consider public comments on the environmental assessment.

§ 29.42-2 Other requirements for environmental protection.

All operations, including those under casual use, shall be conducted so as to protect fish and wildlife and habitat resources of the refuge system lands and shall comply with all pertinent Federal and State laws, including but not limited to the following:

(a) *Air Quality.* All operators shall comply with applicable Federal and State air quality standards, including the Clean Air Act (42 U.S.C. 1857 *et seq.*).

(b) *Water Quality.* All operators shall comply with applicable Federal and State water quality standards, including the Federal Water Pollution Control Act (30 U.S.C. 1151 *et seq.*).

(c) *Solid Wastes.* All operators shall comply with applicable Federal and State standards for the disposal and treatment of solid wastes, including regulations issued pursuant to the Solid Waste Disposal Act as amended by the Resource Conservation and Recovery Act (42 U.S.C. 6901 *et seq.*). All garbage, refuse, or waste shall either be removed from the affected lands, disposed of, or treated to minimize, so far as is practicable, its impact on fish and wildlife and habitat resources.

(d) *Threatened and Endangered Species of Fish, Wildlife, and Plants.* The operator shall take such action as may be needed to avoid jeopardizing the continued existence of threatened or endangered species, or adversely modifying or destroying their critical habitat.

(e) *Cultural and Paleontological Resources.* (1) Operators shall not knowingly disturb, alter, injure, or destroy any scientifically important paleontological remains or any historical or archaeological, site, structure, building, or object on refuge system lands.

(2) Operators shall immediately bring to the attention of the authorized officer any cultural and/or paleontological resources that might be altered or destroyed on refuge system lands by the operations, and shall leave such discovery intact until told to proceed by the authorized officer. The authorized officer shall evaluate the discoveries upon notification, take action to protect or remove the resource, and allow operations to proceed within 10 working days if feasible.

(3) The Federal Government shall have the responsibility and bear the cost of investigations and salvage of cultural and paleontological values discovered after a plan of operations has been approved, or where a plan is not involved.

(f) *Protection of survey monuments.* To the extent practicable, all operators shall protect all survey monuments, witness corners, reference monuments, bearing trees, and line trees, against destruction, obliteration, or damage. If, in the course of operations, any monuments, corners, or accessories are destroyed, obliterated, or damaged by such operations, the operator shall immediately report the matter to the authorized officer. The authorized officer shall prescribe, in writing, the requirements for the restoration or reestablishment of monuments, corners, and bearing and line trees.

(g) *Use of water.* If the operator uses water from a point of diversion within the refuge boundaries, the operator must show that either his or her right to use the water is superior to any claim of the United States to the water, or if not, that the removal of the water from the water system will not damage the resources of the refuge.

§ 29.43-1 Noncompliance.

(a) Whenever the authorized officer determines that an operator is failing or has failed to comply with the requirements of an approved plan of operations, or with the provisions of these regulations, the authorized officer shall serve a notice of noncompliance upon the operator by delivery in person to the operator or his authorized agent, or by certified mail addressed to his last known address.

(b) A notice of noncompliance shall specify in what respects the operator is failing or has failed to comply with the requirements of the plan of operations or the provisions of applicable regulations, and shall specify the actions which are in violation of the plan or regulations and the actions which shall be taken to correct the noncompliance and the time limits, not to exceed 30 days, within which corrective action shall be taken.

(c) An operator who conducts mining operations undertaken either without an approved plan of operations, if one is required, or without taking actions specified in a notice of noncompliance within the time specified therein, may be enjoined by an appropriate court order from continuing such operations and be liable for damages for such unlawful acts.

(d) Failure by the operator to take necessary action on a notice of noncompliance, except when an appeal of such notice is pending, shall constitute justification for mandatory bonding of subsequent activities.

§ 29.43-2 Access.

(a) An operator is entitled to access to his operations consistent with the provisions of the mining laws, other applicable federal laws, and these regulations.

(b) All operators must have a Special Use Permit which is provided by the authorized officer pursuant to 50 CFR 25.41 in order to enter upon refuge system lands. The permit shall have a one, three, or five year term. For operations subject to a plan of operations, the approved plan will serve as a Special Use Permit.

(c) The location of access routes and other conditions necessary to protect fish and wildlife and habitat resources, protect the public health and safety, and protect the interests of other lawful users of adjacent land or land traversed by the access routes shall be specified. The authorized officer may also require the operator to use existing roads to minimize the number of access routes, and, if practicable, to construct accesss roads within a designated transportation or utility corridor. When commercial hauling is involved and the use of an existing road is required, the authorized officer may require the operator to make appropriate arrangements for use and maintenance.

§ 29.43-3 Fire prevention and control.

The operator shall comply with all applicable Federal and State fire laws and regulations, and shall take all reasonable measures to prevent and suppress fires in the area of operations.

§ 29.43-4 Maintenance and public safety.

During all operations, the operator shall maintain structures, equipment, and other facilities in a safe and orderly manner. Hazardous sites or conditions resulting from operations shall be marked by signs, fenced, or otherwise identified to alert the public in accordance with applicable Federal and State laws and regulations.

§ 29.43-5 Inspection.

The authorized officer may periodically inspect operations to determine if the operator is complying with these regulations. The operator shall permit the authorized officer access for this purpose.

§ 29.43-6 Notice of suspension of operations.

(a) Except for seasonal suspension, all operators shall notify the authorized office of any suspension of operations within 30 days after such suspension. This notice shall include:

(1) Verification of intent to maintain structures, equipment, and other facilities; and

(2) The expected re-opening date, if such date is known.

(b) The operator shall maintain the operating site, structures, and other facilities in a safe and acceptable condition during non-operating periods.

§ 29.43-7 Cessation of operations.

The operator may be required within a reasonable time following cessation of operations, to remove all structures, equipment, and other facilities, and reclaim the site of operations, unless permission is granted, in writing, from the authorized officer to do otherwise.

§ 29.44 Patented claims.

When operations on patented claims within the boundaries of the refuge cause significant harm to the fish and wildlife and habitat resources of the refuge system lands outside the claim, the authorized officer may require the operator to prevent such harm, or to file and have approved a plan of operations pursuant to § 29.41.

§ 29.45 Appeals.

(a) Any operator adversely affected by a decision of the authorized officer made pursuant to the provisions of this subpart shall have a right of appeal to the Regional Director, pursuant to 50 CFR 25.44.

(b) No appeal shall be considered unless it is filed, in writing, in the office of the authorized officer who made the decision from which an appeal is being taken, within 30 days after the date of the authorized officer's final decision. A decision of the authorized officer from which an appeal is taken shall be effective during the pendency of an appeal. A request for a stay may accompany the appeal.

(c) The appeal to the Regional Director shall contain:

(1) The name and mailing address of the appellant.

(2) When applicable, the name of the mining claim(s) and serial number(s) assigned to the mining claims recorded with the Bureau of Land Management pursuant to subpart 3833 of Title 43 of the Code of Federal Regulations, which are subject to the appeal.

(3) A statement of the reasons for the appeal and any arguments the appellant wishes to present which would justify reversal or modification of the decision.

(d) The Regional Director shall promptly render a decision on the appeal no later than 30 days after its receipt, which shall be the final agency decision on the matter. The decision shall be in writing and shall set forth the reasons for the decision. The decision shall be sent to the appellant.

§ 29.46 Public availability of information.

(a) Information and data submitted and specifically identified by the operator as containing trade secrets or confidential or privileged commercial or financial information and determined by the Area Director to be confidential or privileged shall not be available for public examination. Other information and data submitted by the operator shall be available for examination by the public at the office of the authorized officer in accordance with the provisions of the Freedom of Information Act.

(b) The determination concerning specific information which may be withheld from public examination shall be made in accordance with the rules in 43 CFR Part 2.

[FR Doc. 80-40741 Filed 12-30-80; 8:45 am]
BILLING CODE 4310-55-M

DEPARTMENT OF COMMERCE

National Oceanic and Atmospheric Administration

50 CFR Parts 611 and 643

South Atlantic Fishery Management Council; Public Hearing

AGENCY: National Oceanic and Atmospheric Administration/Commerce.

ACTION: Notice of public hearings.

SUMMARY: The South Atlantic Fishery Management Council will hold public hearings for the purpose of input on the Draft Fishery Management Plan for Atlantic Billfish.

DATES: Written comments on the Billfish Fishery Management Plan from members of the public may be submitted no later than March 20, 1981. Individuals or organizations wishing to comment on the fishery management plan may do so at public hearings to be held as follows:

January 28, 1981; Savannah, Georgia
January 29, 1981; Jacksonville Beach, Florida

All of the above hearings will start at 7:30 p.m and adjourn at 10:00 p.m. The hearings will be tape recorded and the tapes will be filed as an official transcript of the proceedings. A written summary will be prepared.

ADDRESS: Send comments to Chairman, South Altantic Fishery Management Council, 1 Southpark Circle, Suite 306, Charleston, South Carolina 29407.

Hearing locations:

January 28, 1981; Savannah Science Museum, Explorer Room, 4405 Paulsen Street, Savannah, Georgia 31405.
January 29, 1981; City Council Chamber, 2nd Floor Municipal Building, 11 North 3rd Street, Jacksonville Beach, Florida 32250.

Additional hearings will be held in other locations under the jurisdiction of the South Atlantic Council at some future time.

FOR FURTHER INFORMATION CONTACT: David H. G. Gould, Executive Director, South Atlantic Fishery Management Council, Suite 306, Charleston, S.C. 29407, (803) 571-4366.

Dated: December 19, 1980.

Robert K. Crowell,

Deputy Executive Director, National Marine Fisheries Service.

[FR Doc. 80-40451 Filed 12-30-80; 8:45 am]
BILLING CODE 3510-22-M

Notices

Federal Register
Vol. 45, No. 252
Wednesday, December 31, 1980

This section of the FEDERAL REGISTER contains documents other than rules or proposed rules that are applicable to the public. Notices of hearings and investigations, committee meetings, agency decisions and rulings, delegations of authority, filing of petitions and applications and agency statements of organization and functions are examples of documents appearing in this section.

DEPARTMENT OF AGRICULTURE

Forest Service

Western Spruce Budworm Management Plan, Carson National Forest, Taos County, New Mexico; Intent To Prepare an Environmental Impact Statement

Pursuant to Section 102(2)(c) of the National Environmental Policy Act of 1969, the Department of Agriculture, Forest Service, will prepare an environmental impact statement for management of the Western Spruce Budworm infestation within Carson National Forest lands and adjacent State, private, and Taos Pueblo lands. A range of alternatives for determining a course of action in 1981 and future years will be evaluated. One of these will be (1) no action. Other alternatives will consider (2) silvicultural practices, (3) evaluation of *Bacillus thuringiensis* as a promising insecticide for future use, and the (4) use of the insecticide carbaryl (Sevin®) for suppression.

Early in the environmental analysis, Federal, State, and local agencies, individuals or organizations who may be interested in or affected by the decision will be invited to participate in the scoping process, which includes: (a) identification of the issues to be addressed; (b) identification of issues to be analyzed in depth; and (c) elimination of insignificant issues, or those which have been covered by a previous environmental review, and (d) determine potential cooperating agencies and assign responsibilities.

The Fish and Wildlife Service of the Department of the Interior will be invited to participate as a cooperating agency to evaluate potential impacts on threatened and endangered species habitat if any such species are found to exist in the infested area which could be treated.

Environmental assessment reports were prepared in 1979 and 1980 in response to this insect outbreak and public meetings were held in August and December 1980 in several local communities. Additional meetings may be scheduled.

The environmental analysis is expected to take about five months. The draft environmental impact statement should be available for public review in February 1981. The final environmental impact statement is scheduled to be completed in April 1981.

Questions about the proposed action and environmental impact statement should be directed to John F. Hutt, Timber Staff Officer, Carson National Forest, P.O. Box 558, Taos, New Mexico, 87571 by January 9, 1981. His telephone number is (505) 758-2238.

Written comments and suggestions concerning this analysis should be sent to John S. Crellin, Forest Supervisor, Carson National Forest, Taos, New Mexico, 87571.

M. J. Hassell, Regional Forester, Southwestern Region is the responsible official.

Dated: December 16, 1980.

M. J. Hassell,
Regional Forester.

[FR Doc. 80-40574 Filed 12-30-80; 8:45 am]
BILLING CODE 3410-11-M

BOARD FOR INTERNATIONAL BROADCASTING

Privacy Act of 1974; Annual Publication of Systems of Records.

The purpose of this document is to give notice, pursuant to the provisions of the Privacy Act of 1974, 5 U.S.C. 552a (e)(4), of intent to add a system of records to those previously maintained by the Board for International Broadcasting (BIB). No changes have been made in the BIB's Systems of Records since its latest publication on September 20, 1977. This notice meets the requirement of annual publication of Systems of Records under the Privacy Act. The added system of records will be known as BIB-3 Grievance Records. Because this system is being adopted from an existing system published by the Office of Personnel Management no report on the new system is being filed with the president of the Senate, the Speaker of the House of Representatives or the Office of Management and Budget.

DATES: Any interested party may submit written comments regarding the additional system. To be considered, comments must be received on or before January 30, 1981. The addition shall become effective as proposed without further notice on January 30, 1981, unless comments are received that would result in a determination to the contrary.

ADDRESS: Address comments to the Board for international Broadcasting, 1030 15th Street, NW., Suite 430, Washington, D.C. 20005.

FOR FURTHER INFORMATION CONTACT: Arthur D. Levin, Budget and Administrative Officer, Board of International Broadcasting, 1030 15th Street, N.W., Suite 430, Washington, D.C. 20005.

Walter R. Roberts,
Executive Director.

BIB—3

System name:

Grievance Records—BIB.

System location:

Agency Liaison Division, General Services Administration (GSA), which under contractual arrangement holds such records. Board for International Broadcasting (BIB) personnel files contain copies.

Categories of individuals covered by the system:

Current and former Board Members, staff and consultants.

Categories of records in the system:

System contains records relating to grievances filed by current and former Board Members, staff and consultants. Case files contain all douments related to a given grievance, including statements of witnesses, reports of interviews and hearings, examiner's findings and recommendations, copy of the original decision and related correspondence and exhibits.

Authority for maintenance of the system:

31 U.S.C. generally; Public Law 93-129, October 19, 1973.

Routine uses of records maintained in the system:

These records and information in these records may be used:

a. To disclose pertinent information to the appropriate Federal, State or local agency responsible for investigating, prosecuting, enforcing or implementing a statute, rule, regulation or order, where the disclosing agency becomes aware of an indication of a violation or potential violation of civil or criminal law or regulation.

b. To disclose information to any source from which additional information is requested in the course of processing a grievance to the exent necessary to identify the individual, inform the source of the purpose(s) of the request and identify the type of information requested.

c. To provide information to a congressional office from the record of an individual in response to an inquiry from that congressional office made at the request of that individual.

d. By the National Archives and Records Service of the General Services Administration in records management inspections conducted under authority of 44 U.S.C. 2904 and 2906.

e. To disclose information to officials of the National Merit Sytems Protection Board, including the Office of the Special Counsel; the Federal Labor Relations Authority and its General Counsel; or the Equal Employment Opportunity Commission, when requested in performance of their authorized duties.

f. To provide information to officials of labor organizations reorganized under the Civil Service Reform Act, when relevant and necessary to their duties of exclusive representation concerning personnel policies, practices and matters affecting work conditions.

Policies and practices for storing, retrieving, accessing, retaining, and disposing of records in the system:

Storage:

These records are maintained in file folders.

Retrievability:

These records are retrieved by the names of the individuals on whom they are maintained.

Safeguards:

These records are maintained in lockable metal filing cabinets to which only authorized personnel have access.

Retention and disposal:

These records are destroyed 3 years after closing of a given case. Disposal is by shredding or burning.

System manager(s) and address:

Budget and Administrative Officer, Board for International Broadcasting, 1030 15th Street, N.W., Suite 430, Washington, D.C. 20005.

Notification procedure:

It is required that individuals submitting grievances be provided a copy of the record under the grievance process. They may, however, contact the agency personnel office or other such designated office where the action was processed, regarding the existence of such records on them. They must furnish the following information for their records to be located and identified:

a. Name.

b. Date of birth.

c. Approximate date of closing of the case and kind of action taken.

d. Organizational component involved.

Records access procedures:

It is required that individuals submitting grievances by provided a copy of the record under the grievance process. However, after the action has been closed, an individual may request access to the official copy of the grievance file by contacting the BIB Budget and Administrative Officer.

Individuals must provide the following information for their records to be located and identified:

a. Name.

b. Date of birth.

c. Approximate date of closing of the case and kind of action taken.

d. Organizational component involved.

Individuals requesting access must also follow the BIB's Privacy Act regulations regarding access to records and verification of identity (1 CFR IV Part 415).

Contesting record procedures:

Review of requests from individuals seeking amendment of their records which have been the subject of a judicial or quasi-judicial action will be limited in scope. Review of amendment requests of these records will be restricted to determining if the record accurately documents the action of the agency ruling on the case and will not include a review of the merits of the action, determination or finding.

Individuals wishing to request amendment to their records to correct factual errors should contact the agency personnel office or other such designated office where the grievance was processed. Individuals must furnish the following information for their records to be located and identified:

a. Name.

b. Date of birth.

c. Approximate date of closing of the case and kind of action taken.

d. Organizational component involved.

Individuals requesting access must also follow the BIB's Privacy Act regulations regarding access to records and verification of identity (1 CFR IV Part 415).

[FR Doc. 80-40442 Filed 12-30-80; 8:45 am]

BILLING CODE 6155-01-M

CIVIL AERONAUTICS BOARD

[Order 80-12-91; Docket Nos. 35986 and 36595]

Defense Department Petition; Competitive Marketing of Air Transportation, Investigation; Order on Reconsideration and To Show Cause

Adopted by the Civil Aeronautics Board at its office in Washington, D.C. on the 18th day of December, 1980.

In the matter petition of Department of Defense to disapprove ATC's prohibition against commissions to travel agents for air transportation sales for official government travel (Docket 35986); and Investigation into the Competitive Marketing of Air Transportation (Docket 36595).

By Order 80-2-152, February 28, 1980, we denied a petition of the Department of Defense (DOD) for an order to show cause why the Air Traffic Conference (ATC) resolution banning the payment of commissions to travel agents on government travel should not be disapproved.[1] In addition, we consolidated the issue of the legality of the provision into the *Competitive Marketing Investigation*. The American Society of Travel Agents (ASTA) has filed a petition requesting that we reconsider Order 80-2-152. It asks us to reverse our decision and disapprove the provision immediately, without waiting for a final decision in the *Marketing* case.

In support of its petition,[2] ASTA argues that the provision restricts the "level" of commissions carriers may pay agents. As such, the provision should be disapproved in accordance with the terms of Order 80-2-33, February 5, 1980 which disapproved all ATC and IATA agreements which restrict how carriers can compensate their agents. ASTA also argues that the Board's action, continuing approval of the ban pending

[1] DOD and ASTA specifically seek disapproval of paragraph 11 of Resolution 90.2. With the recent revisions to the ATC Sales Agency Agreement the provision now appears as section XXI.C.6 of Resolution 90.3.

[2] ASTA's petition was accompanied by a request for leave to file an otherwise unauthorized document, which we will grant.

completion of the *Marketing* case, is contrary to its policy of encouraging experimentation in the marketing of air transportation. In support of its position, ASTA cites Order 80-2-112, February 21, 1980, where the Board approved experimental group contractor fares on the condition that data revealing the success of the experimental fares be filed in Docket 36595.

The American Automobile Association (AAA) and DOD have filed answers in support of ASTA's petition. AAA expresses "surprise" at the Board's reluctance to suspend approval of an anticompetitive agreement to the extent necessary to permit carriers to experiment with compensating travel agents for sales of government travel. DOD stresses that its petition only sought a lifting of the ATC ban to the extent necessary to allow it to conduct a specific test. Moreover, DOD asserts that it will be of limited value as a party to the *Marketing* case because it cannot represent all government agencies on this issue and cannot be assumed to be acting for them at the hearing.[3] As to the Board's finding that the provision relates more to a travel agency function—promoting air transportation—than commission levels, DOD indicates that government travelers are in the same position as other nondiscretionary travelers, particularly businessmen. DOD suggests that the fact that ATC permits carriers to pay commissions on businessmen's tickets refutes the notion that agents should not be compensated for merely ticketing passengers. Finally DOD argues that ATC may be unjustly discriminating between commercial and government nondiscretionary travel purchased through travel agents.

ATC has filed an answer.[4] It asserts that granting the ASTA petition would prejudice the parties who have prepared their cases for the *Marketing* case on the assumption that the desirability of continuing the ban on commissions on government travel would be in issue.[5]

Subsequently, when the House Appropriations Committee referred to the DOD proposal in House Report 96-1317, DOD filed a supplementary answer construing the House report to be favorable to its position. The Chief Counsel for Advocacy of the U.S. Small Business Administration has filed a document in which it makes similar arguments. ATC, on the other hand, has filed a reply in which it construes the House Report to be unfavorable to the DOD experiment.[6]

We have decided to grant the ASTA petition. On reconsideration, we reverse our decision in Order 80-2-152 to consolidate into the *Competitive Marketing Investigation* the issue of whether the Board should withdraw approval and antitrust immunity for the provision of the ATC passenger sales agency agreement banning commissions for sales of government travel. We will also sever a similar IATA prohibition from the *Marketing* case. Consolidation in that proceeding has already unduly delayed resolution of the issue and is likely to foreclose a decision in the near future. Moreover, consolidation of the issue has only served to further complicate the already complex *Marketing* case. Consequently, we are severing the issue of commissions for government travel and we are directing the presiding administrative law judge in forward the pleadings, exhibits and submissions of the parties on this issue to the Board as soon as possible. Furthermore, on the basis of pleadings in Docket 35986, we have decided to direct all interested persons to show cause why the ATC and IATA agreements, insofar as they ban commissions for sale of government transportation, should not be disapproved. We will consider the exhibits and submissions that have already been presented in the *Marketing* case in conjunction with comments and objections to our tentative findings.

Order on Reconsideration

When we consolidated the DOD petition into the *Marketing* case last February, we noted that it was desirable that the issue be resolved quickly. DOD had allowed that the federal treasury would save substantial sums if its plan were allowed to go into effect. Whether, and to what extent, the public would realize savings from the plan appeared to be a type of issue well-suited for hearing procedures, especially when a broad ranging inquiry into the travel agency industry was already underway and consoldiation of the issue did not appear to require any signfiicant reorientation of the proceeding. In short, we consolidated the DOD petition into the *Marketing* case because it appeared to be a convenient forum in which the issues it raised could be quickly resolved.

Unfortunately, the proceeding has been subject to several prolonged delays.[7] Nine months have passed since we consolidated the petition and yet the hearing in the *Marketing* case will not begin until mid-January. Absent immediate action, it appears that it will be some time before the questions raised in the DOD petition will be decided. Removing the question of whether travel agents should be able to earn commissions on sales of government travel may help simplify the *Competitive Marketing Investigation.* Whether agents should be able to earn commissions on sales or government travel involves only two minor provisions of the rather extensive agency agreements at issue. They appear to present simple issues of peripheral importance in the case. The government travel issue does not affect the other agency programs issues which parties perceive to be central to the *Marketing* case. Although the ban on commissions for government travel may be a provision with limited ramifications, it has nonetheless complicated that proceeding and been a factor in keeping the case from moving forward quickly. The government travel issue does not affect the other agency program issues which parties perceive to be central to the *Marketing* case.

Consequently, we have decided to sever the government travel issue from the *Marketing* case. We direct the presiding judge to forward forthwith, for inclusion in Docket 35986, all pleadings, exhibits and submissions parties have filed on the issue of whether the provision of the ATC passenger sales agency agreement and the similar IATA provision which foreclose carriers from paying commissions for sales of government travel should continue to have Board approval and antitrust immunity under sections 412 and 414 of the Federal Aviation Act.

Order to Show Cause

We have also decided to grant DOD's original request for relief and to direct interested persons to show cause why the ATC and IATA bans on travel agent commissions for government travel should not be disapproved. On the basis of the pleadings filed in Docket 35986,

[3] According to DOD, the General Services Administration is responsible for the purchase of air transportation by federal executive agencies other than DOD.

[4] Its filing was accompanied by a motion to file an otherwise unauthorized document, which we will grant.

[5] ATC has also raised technical objections to the ASTA petition. ATC argues that the petition was filed out of time, without sufficient justification. We disagree. ASTA has shown good cause for the delay in filing its petition. It states it interpreted the order to grant final relief, for which our procedures afford 20 days for petitions for reconsideration, not interlocutory relief, for which our procedures allow 10 days for petitions for reconsideration. *See* 14 CFR § 392.37. We believe their interpretation was reasonable and will consider the petition.

[6] All three filings were accompanied by motions for leave to file unauthorized documents, which we will grant. The pertinent portion of the report is attached as appendix A.

[7] The resignation of the presiding administrative law judge and the illness of ATC's chief policy witness are just two examples.

we find there is a significant showing that those provisions should be disapproved.[8] Section 412(c)(2) of the Federal Aviation Act, as amended, provides that we must disapprove any agreement which substantially reduces or eliminates competition unless we find that the agreement is necessary to meet a serious transportation need or to secure important public benefits and we find that such need can be met or such benefits can be secured by reasonably available alternative means having materially less anticompetitive effects.

We have tentatively concluded that the agreements substantially reduce competition by precluding travel agents from competing with the airlines and one another for government travel dollars. The agreements appear to perpetuate the present system of carrier run ticket offices, which usually serve the government's air travel needs, and limit the government's opportunities to obtain air travel services.

We also tentatively conclude that the provisions are not justified by a serious transportation need or to meet a public purpose which could not be achieved by reasonably available less anticompetitive means. In the past, proponents of the ban on commissions for government travel justified the constraint on the grounds that travel agents had a limited role in the marketing of air transportation. They perceived the primary function of travel agents to be to promote, rather than merely sell, air travel services—particularly to nondiscretionary travelers. Air carriers and the public were seen to benefit so long as travel agents served in this limited role, but not when they merely performed functions air carriers could provide. However, such arguments may no longer be valid in view of the increasing numbers of nondiscretionary travelers travel agents now serve. While the notion of a special role for travel agents may have some validity in the context of other agency agreements, we conclude it does not, by itself, justify continuing the ban on travel agent commissions on government travel.

Furthermore, the provision may be inimical to the public interest. DOD has alleged that its plan will save taxpayers substantial sums. It indicates that an unusually small portion of government travelers move on discount fares. It believes that if it is permitted to enter into an agreement with a travel agent to provide an unbiased computerized reservation service, the proportion of government travelers moving on discount fares will increase and the federal treasury will be saved substantial sums.[9]

Interested persons will be given 30 days following service of this order to show cause why the tentative findings and conclusions set forth here should not be made final. We expect such persons to support their objections, if any, with detailed answers specifically setting forth the findings and conclusions to which objection is taken. Such objections should be accompanied by arguments of fact or law and should be supported by legal precedent or detailed economic analysis. We intend to consider all the materials certified to us and parties are encouraged to cite evidence submitted in Docket 36595 and certified to the Board in accordance with this order. General, vague or unsupported objectives will not be entertained. Replies will be filed with the Board within 14 days of the date on which objections are due.

Accordingly: 1. We grant ASTA's petition for reconsideration of Order 80-2-152, February 28, 1980;

2. On reconsideration of that order we reverse our decision to consolidate Docket 35986 into the *Investigation Into the Competitive Marketing of Air Transportation,* Docket 36595;

3. We are severing the issue of whether the provisions of the ATC and IATA agency agreements proscribing travel agency commissions on government travel should be disapproved and antitrust immunity withdrawn and we are directing the presiding administrative law judge in the *Competitive Marketing Investigation* to forward the pleadings, exhibits and other submissions of the parties on this issue to Docket 35986 forthwith;

4. We grant all motions for leave to file unauthorized documents;

5. ATC, IATA and other interested persons are directed to show cause why the Board should not: (1) disapprove Agreement CAB 27001, to the extent it established the ban on government commissions set out in paragraph 11 of ATC Resolution 90.2; (2) disapprove Agreement CAB 28217 to the extent it established section XXI.C.6 of ATC Resolution 90.3; (3) disapprove Agreement CAB 28045-R3 to the extent it establishes section (G)(7)(a) of IATA Resolution 810; and (4) otherwise make final the tentative findings and conclusions set forth here;

6. Any interested person having objections to the issuance of an order making final these tentative findings and conclusions shall within 30 days after the date of service of this order, file with the Board in Docket 35986 and serve on the parties named in paragraph 11, a statement of objections specifying the tentative findings or conclusions objected to and providing statistical data and/or other evidence to support the statement of objections;

7. Replies to objections shall be filed with the Board within 14 days of the date on which objections are due and served upon the persons named in paragraph 11;

8. Notwithstanding paragraphs 6 and 7, individuals may submit their views by filing a single copy with the Board;

9. If timely and properly supported objections are filed, full consideration will be accorded the matter or issues raised before futher action is taken by the Board;

10. If no objections are filed to this order, all further procedural steps will be deemed to have been waived and the Board may proceed to enter an order in accordance with its tentative findings and conclusions;

11. This order will be served on all parties to the *Competitive Marketing Investigation,* Docket 36595; and

12. This order shall be published in the Federal Register.

All Members concurred.

By the Civil Aeronautics Board.

Phyllis T. Kaylor,

Secretary.

Appendix A—Official Travel and the Use of Scheduled Airlines Traffic (Ticket) Offices (SATO's)

In Report No. 96-450 on the fiscal year 1980 Defense Appropriations this committee directed DOD to suspend the procurement or leasing of all automated equipment and travel agency services pending the submission of a complete report to this Committee on the subject of travel services. This report has been received and thoroughly reviewed along with other data relating to how the Department of Defense can most efficiently, effectively and economically satisfy its passenger transportation requirements. (See part 6 of the Hearings, pages 516-552).

The Scheduled Airlines Traffic or Ticket Office (SATO) Program presently provides the latest state-of-the-art electronic travel

[8] Specifically, we have tentatively decided to disapprove Agreements CAB 27001, to the extent it established the ban on government commissions set out in paragraph 11 of ATC Resolution 90.2. We are also proposing to reverse our decision in Order 80-9-161 to grant interim approval and immunity to the ATC ban on travel agent commissions on government travel in ATC's revised sales agency agreement, which we then approved subject to conditions. By this order we propose to disapprove Agreement CAB 28217 to the extent it established section XXI.C.6 of the ATC Resolution 90.3. Finally, we propose to disapprove Agreement CAB 28045-R3 to the extent it establishes section (G)(7)(a) of IATA Resolution 810.

[9] DOD places the savings at $28.5 million. As such, elimination of the provision may result in greater use of discount fares by DOD or other government travelers.

service to DOD travelers at 141 locations at little or no cost to the Department of Defense. The remaining 25 SATO locations will receive electronic travel service equipment in the near future, again with little or no cost to DOD. Not only do the SATO's provide "one-call" electronic travel services, but they are expanding upon these services to include management information reports in order to facilitate an improved traffic management function within the DOD. This management information system is being implemented at minimal costs to the Department, compared to the appropriated funds which would be expended to effect DOD plans for a Standard Travel Advance Reservation System (STARS) and the procurement of in-house DOD electronic reservation and ticketing equipment. There is little or no data available to support the DOD contention that significant savings in travel expenses will result from operating its own ADP equipment and/or relying on travel agents to handle tickets and accommodations. The DOD reports that it will provide the Committee cost information when it is provided to the Civil Aeronautics Board.

"As a result of the present and expanded service being provided through the SATO's, the Committee does not believe that the Department of Defense should duplicate these existing services, but continue to work with the scheduled airline industry to further improve the SATO system and to insure that the lowest possible fare is obtained.

"The Committee does, however, recommend that DOD purchase teleticketing machines for those installations which do not have SATO's and where the DOD can certify that such purchase will result in net savings. The Committee also agrees that a test using travel agents (Commercial Ticket Office, CTO) to process government travel request should be conducted if CAB can be persuaded to overturn an air traffic conference resolution prohibiting the payment of a commission to travel agents handling official government travel. Also, approval of the GAO is required since it has in force a special prohibition on the use of travel agents to manage official travel. After these approvals have been obtained the test plan should be submitted to the Committee for study prior to implementation."

[FR Doc. 80-40656 Filed 12-30-80; 8:45 am]
BILLING CODE 6320-01-M

DEPARTMENT OF COMMERCE

International Trade Administration

Exemption of Foreign Air Carriers From Customs Duties and Taxes; Request for Finding of Reciprocity (Kuwait)

Notice is hereby given that the Department of Commerce is undertaking to determine whether, pursuant to sections 309 and 317 of the Tariff Act of 1930, as amended (19 U.S.C. 1309 and 1317), and section 4221 of the Internal Revenue Code of 1954, as amended (26 U.S.C. 4221), the Government of Kuwait allows substantially reciprocal customs and tax exemptions to aircraft of U.S. registry in connection with international commercial operations to those exemptions granted to aircraft of foreign registry under the aforementioned statutes. The basis of this undertaking is a request by Kuwait Airways for a finding of such reciprocity.

The above-cited statutes provide exemptions for aircraft of foreign registry from payment of import duties and certain internal revenue taxes on the import or purchase of supplies in the United States for such aircraft in connection with their international commercial operations. "Supplies" as used in this context indicates a wide range of articles used by aircraft in international operations, including fuel and lubricants, spare parts, consumable supplies, and ground handling and support equipment. These exemptions apply upon a finding by the Secretary of Commerce, or his designee, and communicated to the Department of the Treasury, that such country allows, or will allow, "substantially reciprocal privileges" to aircraft of U.S. registry with respect to imports or purchases of such supplies in that country.

Interested parties are invited to submit their views and comments in writing concerning this matter to Mr. Abraham Katz, Assistant Secretary for International Economic Policy, Room 3830B, U.S. Department of Commerce, Washington, D.C. 20230. All submissions should be made in five copies and should be received no later than thirty days from the date of this notice.

Copies of all written comments received will be available for public inspection between the hours of 8:30 a.m. and 5 p.m., Monday through Friday, in the Freedom of Information Records Inspection Facility, International Trade Administration, Room 3102, Department of Commerce, Washington, D.C.

It is suggested that those desiring additional information contact Mr. C. William Johnson, International Services Division, Office of International Finance, Investment and Services, Room 2204, Washington, D.C. 20230, or call area code 202-377-5012.

Abraham Katz,

Assistant Secretary for International Economic Policy.

[FR Doc. 80-40575 Filed 12-30-80; 8:45 am]
BILLING CODE 3510-25-M

Steel Trigger Price Mechanism

AGENCY: U.S. Department of Commerce, International Trade Administration.

Preclearance Requests

SUMMARY: This notice is to advise the public which companies have applied for preclearance, under the preclearance procedures, in addition to those published on November 24 in the Federal Register (45 FR 77500).

FOR FURTHER INFORMATION CONTACT: F. Lynn Holec, Import Administration, International Trade Administration, U.S. Department of Commerce, Washington, D.C. 20230 (202) 377-3793.

The Department of Commerce uses trigger prices to monitor imports of steel mill products into the U.S. Sales below trigger price indicate possible sales of the subject merchandise at less than fair value within the meaning of Title VII, Tariff Act of 1930, as amended. In those instances, where imports appear to be priced at less than fair value, the Secretary of Commerce may exercise his authority to self-initiate antidumping investigations.

The Department of Commerce recognizes, however, that there may be certain manufacturers/exporters that can produce and/or export steel to the U.S. at prices below the TPM which are not at less than fair value. Where this is the case, the foreign producer/exporter can avoid the risk of a TPM initiated antidumping investigation by requesting preclearance and cooperating with the Department's preclearance review of the producer's/exporter's production costs and pricing practices.

A number preclearance requests have already been filed and were published on November 24 in the Federal Register (45 FR 77501). A list of those companies which have subsequently requested preclearance follows in Table I.

Any additional requests for preclearance should be filed with the U.S. Department of Commerce, International Trade Administration, Import Administration, Office of Compliance, Room 1001, Washington, D.C. 20230. The request may cover any of the categories in the trigger price manual published by the U.S. Department of Commerce for the fourth quarter of 1980. Notice of and opportunity to comment on a preclearance request will be published in the Federal Register.

Dated: December 24, 1980.

John Greenwald,

Deputy Assistant Secretary for Import Administration.

Company and Products

Central Wire Industries, Ltd.—Stainless Steel Wire.

Interprovincial Steel and Pipe Corporation Ltd.—Sheets, Plates, Pipe and Tube.

Jensen Steel Limited—Bars, Sheets, Structurals, Plates, Pipe and Tube.
Mutual Steel Corporation—Structurals, Bars, Pipe and Tubing, Plates, Sheets.
Niagarasteel Service Centre—Structurals, Plates, Rail and Track Accessories, Bars, Pipe and Tubing, Sheets.
Vallance Brown & Co. Limited—Bars, Structurals, Plates, Sheets.
Prudential Steel Ltd.
Russelsteel—Bars, Structurals, Sheets, Plates, Tubes, Pipe, Wire.
Union Draw Steel Co., Ltd.—Bars.
Bridge & Tank—Structural Shapes, Plates, Bars, Sheets.
Acier Casteel Inc.—Plate, Structurals, Bars, Pipe.
Casteel Inc.—Plate, Structurals, Bars, Pipe.
Titan Steel & Wire Co., Ltd.—Nails, Wire.

[FR Doc. 80-40568 Filed 12-30-80; 8:45 am]
BILLING CODE 3510-25-M

National Oceanic and Atmospheric Administration

Marine Mammals; Modification to Permit No. 217; Dr. Bruce R. Mate, Oregon State University

On November 18, 1980, Notice was published in the Federal Register (45 FR 76216) that a request for modification of Permit No. 217 had been received by the National Marine Fisheries Service from Dr. Bruce Mate, Oregon State University.

Notice is hereby given that pursuant to the provisions of §§ 216.33 (d) and (e) of the Regulations Governing the Taking and Importing of Marine Mammals (50 CFR Part 216) the Scientific Research Permit No. 217 issued to Dr. Bruce R. Mate, Marine Science Center, School of Oceanography, Oregon State University, Newport, Oregon 97365 on December 27, 1977 (43 FR 30) and as modified on February 7, 1978 (45 FR 5035) and on September 21, 1979 (45 FR 54748), is further modified as follows:

A new section A-3 is added as follows:

"3. The Holder is authorized to conduct experiments involving the acoustical harassment of harbor seals as described in supplemental documents to the application."

This modification became effective on December 22, 1980.

The modification and related documents are available for review in the following offices:

Assistant Administrator for Fisheries, National Marine Fisheries Service, 3300 Whitehaven Street, NW., Washington, D.C.; and

Regional Director, National Marine Fisheries Service, Northwest Region, 1700 Westlake Avenue North, Seattle, Washington 98109.

Dated: December 22, 1980.

William H. Stevenson,

Deputy Assistant Administrator for Fisheries, National Marine Fisheries Service.

[FR Doc. 80-40652 Filed 12-30-80; 8:45 am]
BILLING CODE 3510-22-M

Marine Mammals; Modification of Permit No. 288; Craig N. McLean and Steven R. Morello.

Notice is hereby given that pursuant to the provisions of §§ 216.33(d) and (e) of the Regulations Governing the Taking and Importing of Marine Mammals (50 CFR Part 216) the Scientific Research Permit No. 288 issued to Craig N. McLean, 352 Riverside Avenue, Rutherford, New Jersey 07070, and Steven R. Morello, 182 Michigan Avenue, Paterson, New Jersey 07503 on July 24, 1980 (45 FR 50621), is modified as follows:

Section B-5 is deleted and replaced by the following new Section:

5. This Permit is valid with respect to the taking authorized herein until December 31, 1981.

This modification became effective on December 22, 1980.

The Permit as modified and documentation pertaining to the modification is available for review in the following offices:

Assistant Administrator for Fisheries, National Marine Fisheries Service, 3300 Whitehaven Street, NW, Washington, D.C.; and

Regional Director, National Marine Fisheries Service, Northeast Region, 14 Elm Street, Federal Building, Gloucester, Massachusetts 01930.

Dated: December 22, 1980.

William H. Stevenson,

Deputy Assistant Administrator for Fisheries, National Marine Fisheries Service.

[FR Doc. 80-40690 Filed 12-30-80; 8:45 am]
BILLING CODE 3510-22-M

Marine Mammals; Modification of Permit No. 208; Ocean Research and Education Society, Inc.

Notice is herey given that pursuant to the provisions of §§ 216.33(d) and (e) of the Regulations Governing the Taking and Importing of Marine Mammals (50 CFR Part 216) the Scientific Research Permit No. 208 issued to the ocean Research and Education Society, Inc., 64 Commercial Wharf, Boston, Massachusetts on December 23, 1977, is modified a follows:

1. Section B-8 is deleted and replaced by;

8. This Permit is valid with respect to the activities authorized under Sections A-2 and A-3 until December 31, 1983.

This modification is effective on December 22, 1980.

The permit as modified, and documentation pertaining to the modification is available for review in the following offices:

Assistant Administrator for Fisheries, National Marine Fisheries Service, 3300 Whitehaven Street, NW., Washington, D.C.;

Regional Director, National Marine Fisheries Service, Southeast Region, 9450 Koger Boulevard, St. Petersburg, Florida 33702;

Regional director, National Marine Fisheries Service, Southwest Region, 300 South Ferry Street, Terminal Island, California 90731;

Regional Director, National Marine Fisheries Service, Northwest Region, 1700 Westlake Avenue, North, Seattle, Washington 98109;

Regional Director, National Marine Fisheries Service, Northeast Region, 14 ELm Street, Federal Building, Gloucester, Massachusetts 01930; and

Regional director, National Marine Fisheries Service, Alaska Region, P.O. Box 1668, Juneau, Alaska 99802.

Dated: December 22, 1980.

William H. Stevenson,

Deputy Assistant Administrator for Fisheries, National Marine Fisheries Service.

[FR Doc. 80-40691 Filed 12-30-80; 8:45 am]
BILLING CODE 3510-22-M

DEPARTMENT OF DEFENSE

Office of the Secretary

Defense Science Board Task Force on Water in Southwest Asia; Change in Meeting Date

The Defense Science Board Task Force on Water in Southwest Asia meeting scheduled for 14-15 January 1981 at the Pentagon, Arlington, Virginia, as published in the Federal Register (Vol. 45, No. 246, dated Friday, December 19, 1980, FR Doc. 80-39433) has been changed to 21-22 January 1981. In all other respects, the original notice cited above remains the same.

M. S. Healy,

OSD Federal Register Liaison Officer, Washington Headquarters Services, Department of Defense.

December 23, 1980.

[FR Doc. 80-40606 Filed 12-30-80; 8:45 am]
BILLING CODE 3810-70-M

Defense Science Board Task Force on the M-X Environmental Impact Statement; Advisory Committee Meeting

The Defense Science Board Task Force on the Environmental Impact Statement for the M-X Program will meet in closed session on January 14-15, 1980 in the Pentagon, Arlington, Virginia.

The mission of the Defense Science Board is to advise the Secretary of Defense and the Under Secretary of Defense for Research and Engineering on Scientific and Technical matters as they affect the perceived needs of the Department of Defense.

At its meeting on January 14-15, 1981 the Defense Science Board Task Force on the EIS for the MX Program will review the basic design and operation of the entire MX system, the threat to which the system is designed to respond, how the system fits into our overall defense posture, and other relevant introductory material necessary for the Task Force review of the EIS. A substantial part of this information to be presented on design, operation, threat, and defense posture is classified.

In accordance with 5 U.S.C. App. 1 10(d) (1976), it has been determined that this Defense Science Board Task Force meeting concerns matters listed in 5 U.S.C. 552b(c)(1) (1976), and that accordingly, this meeting will be closed to the public.

M. S. Healy,

OSD Federal Register Liaison Officer, Washington Headquarters Services, Department of Defense.

December 22, 1980.

[FR Doc. 80-40605 Filed 12-30-80; 8:45 am]

BILLING CODE 3810-70-M

DEPARTMENT OF EDUCATION

Fund for the Improvement of Postsecondary Education; Meeting

AGENCY: Fund for the Improvement of Postsecondary Education.

ACTION: Notice of meeting.

SUMMARY: This notice sets forth the proposed agenda of a forthcoming meeting of the Board of Advisors to the Fund for the Improvement of Postsecondary Education. This notice also describes the functions of the Board. Notice of this meeting is required under the Federal Advisory Committee Act (Pub. L. 92-463, Sec. 10(a)(2)).

DATES: January 14, 1980, 5:00 p.m. to 9:00 p.m.; January 15, 1980, 9:00 a.m. to 5:00 p.m.

ADDRESS: University of California-Berkeley, Berkeley, California.

FOR FURTHER INFORMATION CONTACT: Arturo Madrid, Director, Fund for the Improvement of Postsecondary Education, 400 Maryland Avenue, S.W., Washington, D.C. 20202 (202-245-8091).

SUPPLEMENTARY INFORMATION: The Board of Advisors to the Fund for the Improvement of Postsecondary Education was established under Section 404 of the General Education Provisions Act. The Board of Advisors to the Fund was established to:

Recommend to the Director of the Fund, the Assistant Secretary for Educational Research and Improvement, and the Secretary priorities for funding and the approval or disapproval of grants and contracts of a given kind or over a designated amount.

The meeting of the Board shall be open to the public.

The Proposed Agenda Includes: Advising on significant issues and policies in postsecondary education. Specifically:

—How large institutions can provide quality services for postsecondary learners.

—Relationship of federal and state support.

—How the Fund can work with the entire postsecondary system of a state.

Records shall be kept of all Board proceedings, and shall be available for public inspection at the Fund for the Improvement of Postsecondary Education, 400 Maryland Avenue, SW, Room 3123, Washington, D.C. 20202, between the hours of 8:00-4:30 weekdays, except Federal Holidays.

Dated: December 23, 1980.

F. James Rutherford,

Assistant Secretary, Educational Research and Improvement.

[FR Doc. 80-40624 Filed 12-30-80; 8:45 am]

BILLING CODE 4000-01-M

Office of the Assistant Secretary for Management

Authority Delegation; Certify True Copies of Department of Education Records

AGENCY: Department of Education.

ACTION: Notice of redelegation of authority to certify true copies of Department of Education records.

SUMMARY: On May 30, 1980, the Secretary of Education delegated to the Assistant Secretary for Management the authority to certify true copies of Department of Education records and to cause the Departmental Seal to be affixed to those records.

On August 20, 1980, the Assistant Secretary for Management redelegated that authority to various Departmental officers.

The purpose of this notice is to inform the public of the redelegation.

FOR FURTHER INFORMATION CONTACT: Thomas Stack, Director, Division of Organization Development/Delegation Control Officer, U.S. Department of Education, 400 Maryland Avenue, SW., (Room 4525 Switzer Building), Washington, D.C. 20202. Telephone: (202) 426-7250.

Notice of Redelegation of Authority To Certify True Copies of Department of Education Records and To Affix the Department Seal

By the authority the Secretary of Education vested in me on May 30, 1980, I have redelegated to the officers listed below the following authority—

(a) To certify true copies of any books, records, papers, other documents on file in the Department, or of extracts from these documents;

(b) To certify that true copies are copies of the entire file;

(c) To certify the complete, original record of a Department file;

(d) To certify that Department files do not contain particular records; and

(e) To cause the Seal of the Department to be affixed to these certifications.

To whom delegated	Area of authority
General Counsel	Department.
Inspector General	Department.
Executive Secretary	Offices of the Deputy Under Secretaries.
	Office of Public Affairs.
	Office of Legislation.
	Office of Planning and Budget.
	Office of Non-Public Education.
Controller	Office of Management.
Deputy Assistant Secretary for Evaluation and Program Management.	Office of Management.
Deputy Assistant Secretary for Human Resources.	Office of Management.
Assistant Secretary for Civil Rights.	Office of Civil Rights.
Assistant Secretary for Elementary and Secondary Education.	Office of Elementary and Secondary Education.
Assistant Secretary for Postsecondary Education.	Office of Postsecondary Education.
Assistant Secretary for Vocational and Adult Education.	Office of Vocational and Adult Education.
Assistant Secretary for Special Education and Rehabilitative Services.	Office of Special Education and Rehabilitative Services.
Assistant Secretary for Educational Research and Improvement.	Office of Educational Research and Improvement.
Director of Bilingual Education and Minority Languages Affairs.	Office of the Director of Bilingual Education and Minority Languages Affairs.
Administrator of Education for Overseas Dependents.	Office of Education for Overseas Dependents.

This authority may be redelegated.

Dated: December 17, 1980.

John Gabusi,

Assistant Secretary for Management.

[FR Doc. 80-40520 Filed 12-30-80; 8:45 am]

BILLING CODE 4000-01-M

Office of Secretary

Authority Delegations; Certify True Copies of Department of Education Records

AGENCY: Department of Education.

ACTION: Notice of delegation of authority to certify true copies of Department of Education records.

SUMMARY: On May 30, 1980, the Secretary delegated to the Assistant Secretary for Management the authority to certify true copies of Department of Education records and to cause the Departmental Seal to the affixed to those records.

The purpose of this notice is to inform the public of that delegation.

FOR FURTHER INFORMATION: Thomas Stack, Director, Division of Organization Development/Delegation Control Officer, U.S. Department of Education, 400 Maryland Avenue, SW., (Room 4525 Switzer Building) Washington, D.C. 20202. Telephone (202) 426-7250.

Notice of Delegation of Authority To Certify True Copies of Department of Education Records and To Affix the Departmental Seal

By the authority vested in me under Pub. L. 96-88 I have delegated to the Assistant Secretary for Management the authority—

(a) To certify true copies of any books, records, papers, other documents on file in the Department, or of extracts from such documents;

(b) To certify true copies are copies of the entire file;

(c) To certify the complete, original record of a Department file;

(d) To certify that Department files do no contain particular records; and

(e) To cause the Seal of the Department to be affixed to these certifications.

The Assistant Secretary for Management may redelegate this authority.

Dated: December 23, 1980.

Shirley M. Hufstedler,

Secretary of Education.

[FR Doc. 80-40519 Filed 12-30-80; 8:45 am]

BILLING CODE 4000-01-M

DEPARTMENT OF ENERGY

Office of Conservation and Solar Energy

Energy Conservation Program for Consumer Products; Petition for Waiver of Consumer Product Test Procedures From Hydro Therm, Inc. (Case No. F-002)

AGENCY: Department of Energy.

SUMMARY: The energy conservation program for consumer products, other than automobiles, was established pursuant to the Energy Policy Conservation Act. The Department of Energy (DOE) has amended the Department's regulations for the energy conservation program for consumer products by allowing the Assistant Secretary for Conservation and Solar Energy temporarily to waive test procedure requirements for a particular covered product (45 FR 64108, Sept. 26, 1980). Waivers may be granted when characteristics of the product prevent use of the prescribed test procedures or lead to results that provide materially inaccurate comparative data. Pursuant to paragraph (b) of § 430.27 of the Code of Federal Regulations, DOE is required to publish in the Federal Register all received Petitions for Waiver and supporting documents from which confidential information has been deleted in accordance with 10 CFR 1004.11. Also, DOE is required to solicit comments data and information with respect to the determination of the petition.

DATES: DOE will accept comments, data, and information no later than January 30, 1981.

ADDRESS: Written comments and statements shall be sent to: Department of Energy, Office of Conservation and Solar Energy, Case No. D-001, Mail Stop GH-068, Forrestal Building, 1000 Independence Avenue, SW, Washington, D.C. 20585.

FOR FURTHER INFORMATION CONTACT: James A. Smith, U.S. Department of Energy Office of Conservation and Solar Energy, Room GH-065, Forrestal Building, 1000 Independence Avenue, SW, Washington, D.C. 20585, (202) 252-9127. Eugene Margolis, Esq., U.S. Department of Energy, Office of General Counsel, Room 6B-128, Forrestal Building, 1000 Independence Avenue, SW, Washington, D.C. 20585, (202) 252-9526.

SUPPLEMENTARY INFORMATION:

Background

On November 21, 1980, Hydro Therm, Inc. filed a Petition for Waiver from the DOE test procedures for consumer products. Specifically, the petitioner believes that the use of the existing furnace test procedure will lead to results that provide materially inaccurate comparative data when these test procedures are applied to a particular design of furnace manufactured by Hydro Therm, Inc.

In consideration of the foregoing and in accordance with the provisions of § 430.27(b) of Chapter II of Title 10, Code of Federal Regulations, DOE is hereby publishing the "Petition for Waiver" in the Federal Register in its entirety. The petition contains no confidential information. DOE is hereby soliciting comments, data and information respecting the determination of the petition.

The actual petition for waiver from Hydro Therm, Inc. was inadvertently ommitted from the Federal Register publication of December 17, 1980 (45 FR 82988). This notice corrects this error by including the Hydro Therm petition for waiver in today's publication.

Issued in Washington, D.C., December 22, 1980.

Maxine Savitz,

Deputy Assistant Secretary for Conservation and Solar Energy.

November 21, 1980.

Re: Petition for Waiver, *10 CFR 430.27.*

Gentlemen: 1. *Petition For Waiver.*

This is a petition for a waiver from the test procedure specified in Appendix N to Subpart B contained in 10 CFR Part 430, as amended on August 12, 1980, as it applies to a pulse combustion boiler produced and sold by Hydrotherm, Inc. ("Petitioner"). Appendix N to Subpart B specifies the test procedures which manufacturers of furnaces are required to utilize in determining the relative energy efficiency of each furnace which they produce. Section 430.24(n) of Subpart B prohibits a furnace manufacturer from making any representation with respect to the energy efficiency of its products unless such representation is based on the results obtained from the testing procedures specified in Appendix N to Subpart B.

2. *General Description Of Petitioner's Business.*-

Since 1953, Petitioner has manufactured conventional, cast iron boilers and hydronic baseboards for sale to residential, commercial and industrial markets through sales representatives, plumbing wholesalers and installers. In July 1979, following a product development program begun in 1977, Petitioner began the production and marketing, under the trademark Hydro-Pulse™, of a new boiler which operates on the pulse combustion principle. In tests conducted by Petitioner, the Hydro-Pulse boiler consistently achieved an energy efficiency of more than 91 percent. This has been confirmed in tests conducted by the American Gas Association Laboratories ("AGA"). Petitioner's Hydro-Pulse boiler was the first and remains the only pulse combustion boiler on the market. To date,

Petitioner has sold approximately 3200 such boilers and presently has approximately 2400 in inventory.

3. *Previous Application For Exception.*

On January 25, 1979, following the grant of a stay by the Department of Energy ("DOE") on January 3, 1979, Petitioner filed an Application for Exception with the Office of Hearings and Appeals from the provisions of 10 CFR Part 430 as it applied to the Hydro-Pulse boiler. The basis for the Application for Exception was that the test procedures provided for in Part 430 were designed to apply to conventional boilers and, because of certain features in the design of a pulse combustion boiler, did not provide an accurate measure of energy efficiency when applied to a pulse combustion boiler and that unless an exception were granted Petitioner would experience gross inequity and serious hardship. The exception was granted on February 12, 1979, to remain in effect until new test procedures applicable to pulse combustion boilers were issued by DOE. Such new test procedures were issued by DOE on August 12, 1980, effective September 11, 1980.

4. *DOE Test Does Not Adequately Measure Condensate.*

At the time of receipt of the proposed new test procedures early in 1980, Hydrotherm did not have available appropriate test facilities to conduct such new test. Subsequently, when it was able to conduct such test, it became evident that the new DOE test procedure did not accurately measure the significant increment of efficiency which is achieved by a Hydro-Pulse boiler in the extraction of latent heat by the condensation of water vapor contained in flue gases. The DOE test infers condensate from an average flue temperature. The DOE test as appplied to a Hydro-Pulse boiler either understates the amount of condensate or indicates that there is no condensate when, in fact, a significant amount of condensate has been collected. The magnitude of the discrepancy is between 1 and 2 percentage points in relative efficiency. Petitioner then requested the AGA to conduct the DOE test on three Hydro-Pulse boilers. The results of the AGA tests confirmed the existence and magnitude of the discrepancy and were received by Petitioner on or about August 27, 1980.

5. *DOE Test Is Unfair To Petitioner.*

The introduction of the Hydro-Pulse boiler represents a State of the art effort by Petitioner to develop and produce significantly more energy efficient boilers and to educate and persuade consumers of the benefits and desirability of purchasing such boilers in preference to comparably rated convential and less expensive ones. When making this purchasing decision, the overriding consideration is energy efficiency, and this, virtually alone, will determine if a consumer is willing to pay more to purchase this novel type of boiler. In this context it would be difficult to exaggerate the importance to Petitioner of being able to accurately represent the full energy efficiency value of the Hydro-Pulse boiler. The present DOE test as conducted by Petitioner and independently by the AGA indicates an energy efficiency for the Hydro-Pulse boiler of approximately 89 percent. The more accurately measured energy efficiency of the Hydro-Pulse boiler using the method described below is approximately 91 percent. Based on its marketing experience thus far, Petitioner believes that this differential will be crucial to its ability successfully to continue marketing the Hydro-Pulse boiler. If Petitioner is denied the opportunity to accurately represent the full energy efficiency value of the Hydro-Pulse boiler, it will suffer a gross inequity and a serious hardship, in that it will be placed at a severe and unwarranted competitive disadvantage and its ability to recover its substantial development costs will be irreparably impaired.

6. *Proposed Use Of Alternative Method.*

At a meeting held at the National Bureau of Standards ("NBS") on October 30, 1980, attended by representatives of DOE, NBS, AGA and Petitioner, the problem described herein was discussed. Based on that discussion, it was agreed the AGA would prepare and submit to NBS data supporting a method for meauring condensate produced by pulse combustion boilers. Such data were submitted by AGA with a letter to NBS dated November 11, 1980. Petitioner believes that the method described in the AGA submission provides a more accurate measurement of the condensate which occurs in a pulse combustion boiler and which results in a significant increment in energy efficiency. Petitioner, therefore, respectfully requests that it be granted a waiver from the requirement that it comply with the test procedures specified in 10 CFR Part 430, and that in lieu thereof it be permitted to use the method described in the AGA submission to NBS. Specifically, the Petitioner proposes to follow the present DOE procedure for condensing boilers using heat up and cool down tests and to calculate the efficiency assuming no condensate (Cl+1.0). The test would be continued through three standard cycles of 9.5 minutes on and 33 minutes off per cycle and the condensate collected and weighed. The amount of condensate collected would be converted into the amount of heat released and this would be expressed as a percentage of the input and added to the efficiency as calculated from the flue loss on a non-condensing dry basis.

7. *Public Policy.*

Petitioner believes that the nation's energy conservation policy will be best served by the granting of this waiver, since the use of the proposed method will effectively encourage a greater number of potential customers to purchase more energy efficient boilers and will better enable the manufacturer to recover the substantial costs of development.

If any additional information is needed, please contact Mr. A. B. Chadwick at 201-768-5500 or the undersigned.

Respectfully submitted,

Hydrotherm, Inc.

Thomas L. Flattery,

Vice President.

[FR Doc. 80-40634 Filed 12-30-80; 8:45 am]

BILLING CODE 6450-01-M

Energy Conservation Program for Consumer Products; Petition for Waiver of Consumer Product Test Procedures From Norris Industries (Case No. D-001)

AGENCY: Department of Energy.

SUMMARY: The energy conservation program for consumer products, other than automobiles, was established pursuant to the Energy Policy Conservation Act. The Department of Energy (DOE) has amended the Department's regulations for the energy conservation program for consumer products by allowing the Assistant Secretary for Conservation and Solar Energy temporarily to waive test procedure requirements for a particular covered product (45 FR 64108, Sept. 26, 1980). Waivers may be granted when characteristics of the product prevent use of the prescribed test procedures or lead to results that provide materially inaccurate comparative data. Pursuant to paragraph (b) of § 430.27 of the Code of Federal Regulations, DOE is required to publish in the Federal Register all received Petitions for Waiver and supporting documents from which confidential information, as determined by DOE, has been deleted in accordance with and 10 CFR 1004.11. Also, DOE is required to solicit comments, data and information with respect to the determination of the petition.

DATES: DOE will accept comments, data, and information no later than January 30, 1981.

ADDRESSES: Written comments and statements shall be sent to: Department of Energy, Office of Conservation and Solar Energy, Case No. D-001, Mail Stop GH-068, Forrestal Building, 1000 Independence Avenue, SW, Washington, D.C. 20585.

FOR FURTHER INFORMATION CONTACT: James A. Smith, U.S. Department of Energy Office of Conservation and Solar Energy, Room GH-065, Forrestal Building, 1000 Independence Avenue, SW, Washington, D.C. 20585, (202) 252-9127. Eugene Margolis, Esq., U.S. Department of Energy, Office of General Counsel, Room 6B-128, Forrestal Building, 1000 Independence Avenue, SW., Washington, D.C. 20585, (202) 252-9526.

SUPPLEMENTARY INFORMATION:

Background

On November 5, 1980, Norris Industries filed a Petition for Waiver from the DOE test procedures for consumer products. Specifically, the petitioner believes that the use of the existing dishwasher test procedure will lead to results that provide materially

inaccurate comparative data when these test procedures are applied to a particular design of dishwasher manufactured by Norris Industries. Also on the same date, Norris Industries filed a "request for confidential treatment of information contained in the petition for waiver." The petitioner believes the request for confidential treatment is justified in accordance with the applicable provisions of 10 CFR 1004.11.

In consideration of the foregoing and in accordance with the provisions of § 430.27(b) of Chapter II of Title 10, Code of Federal Regulations, DOE is hereby publishing the "Petition for Waiver" in the Federal Register with the information deleted which DOE has determined to be confidential in accordance with 10 CFR 1004.11. DOE is hereby soliciting comments, data, and information respecting the determination of the petition.

The actual petition for waiver from Norris Industries was inadvertently omitted from the Federal Register publication of December 17, 1980 (45 FR 82988). This notice corrects this error by including the Norris Industries petition for waiver in today's publication.

Issued in Washington, D.C., December 22, 1980.

Maxine Savitz,

Deputy Assistant Secretary for Conservation and Solar Energy.

[The original of this document contains information which is arguably confidential under 18 U.S.C. 1905. Such material has been deleted from this copy and replaced with XXXXX's.]

United States Department of Energy

In Re Norris Industries, Inc.; Petition for Waiver

Norris Industries, Inc. ("Norris"), pursuant to 10 CFR 430.27, requests the Department of Energy ("DOE") to grant a waiver to the method as provided for in 10 CFR 430, Subpart B, Appendix C, for measuring the energy consumption of home dishwashers.

1. *The particular basic model for which a waiver is requested.* Home dishwashers manufactured by the Petitioner designated as "LER Series."

2. *The design characteristics constituting the grounds for this Petition.*—The LER Series dishwashers use a unique steam generator to provide efficient heating of the water and the dish load. XXXXX Applications are pending before the U.S. Patent Office for patents on the novel features of the LER Series dishwasher.

3. *Specific requirements sought to be waived.*—In 10 CFR 430, Subpart B, Appendix C, that part of Section 2.6 requiring the test to be conducted without a test load, and Section 4.1, in respect to "T", the nominal water heater temperature rise of 90°F.

4. *The need for the requested waiver.*—That part of the Energy Policy and Conservation Act at 42 USC 6291 *et seq.*, as implemented by the DOE in 10 CFR Part 430 and the Federal Trade Commission in 16 CFR Part 305, provides for, among other things, a comprehensive plan for testing home dishwashers for energy consumption and using the test results as the basis for disclosing a calculated energy consumption and annual energy costs on labels attached to the dishwashers at point of sale. The ultimate purpose of this program is to conserve energy by disclosing to consumers through the "Energyguide" label the calculated energy consumption and the annual cost of energy to operate a particular dishwasher relative to other makes and/or models. The current test procedure for dishwashers as set forth in 10 CFR Part 430, Subpart B, Appendix C, by its very nature assumes the traditional model of machine which requires for its efficient operation inlet water at a temperature of 140°F. The test procedure as currently promulgated does not take into account a type of home dishwasher as the Petitioner's LER Series. By reason of the LER Series novel design features, it will save energy over the Petitioner's current models of home dishwashers. However, the present test procedure for home dishwashers does not account for the unique features of the Petitioner's LER Series in the collection of data for the purpose of preparing the "Energyguide" label. This limitation can be eliminated by incorporating in the test procedure in place of the specified 90°F the calculation of inlet water temperature rise. The present 90°F value was determined by the National Bureau of Standards ("NBS"), using that calculation at a time when no available dishwasher could operate with less than 140°F inlet water and water heaters were set at 145°F (FR 42 No. 55 p. 15425). In addition, to validly represent the energy consumed during heating, a dish load is required. This load was also recommended in the original NBS Test procedure, but was deleted as being unnecessary at the time of the final determination of the test procedure by DOE (FR 42 No. 152 p. 39965).

Accordingly, without the requested waiver, it is impossible to arrive at a calculated energy consumption figure for the LER Series dishwasher which would reflect energy consumption in a manner consistent with the intent of 10 CFR 430, Subpart B, Appendix C, nor a test result which would be a valid comparison with the calculated energy consumption of other home dishwashers. The final result would be to deny consumers objective comparative data for the LER Series on the "Energyguide" labels. The provisions of 16 CFR Part 305 would also prohibit relating those potential savings to the consumer by any means other than the testing required for the energy consumption label. In summary, the LER Series dishwasher contains a novel design characteristic which prevents its testing to the currently prescribed test procedures and the currently prescribed test procedures do not evaluate the LER Series dishwasher in a manner representative of its true energy consumption characteristics to provide materially accurate comparative data.

5. *Identification of manufacturers of other dishwashers marketed in the United States known to NORRIS to incorporate similar design characteristics.*—The KitchenAid Division of the Hobart Corporation manufactures a dishwasher with somewhat similar characteristics in that they claim it can operate with an inlet water temperature of 120°F.

6. *Alternate test procedures that will evaluate the LER Series home dishwasher in a manner representative of its energy consumption characteristics.*—Revise 10 CFR 430, Subpart B, Appendix C, Sections 2.6 and 4.1 to read as follows:

"2.6 Load. Use an eight place setting test load of dishes. One place setting consists of the following:

One glass—12 oz. straight sides, made of glass.
One cup—Corning "Centura" No. C-308.
One saucer—Corning "Centura" No. C-506.
One dinner plate—Corning "Centura" No. C-110.
One bread and butter plate—Corning "Centura" No. C-106.
One fruit bowl—Corning "Centura" No. C-409.
One dinner fork—Stainless steel.
One salad fork—Stainless steel.
One knife—Stainless steel.
Two teaspoons—Stainless steel."

"4. Calculation of derived results from test measurements.—4.1 Per-cycle water energy consumption using electrically heated water. Calculate for the cycle type under test the per-cycle water energy consumption using electrically heated water, W_e, expressed in kilowatt-hours per cycle and defined as:

$W_e = VxTxK$,

where

V=reported water consumption in gallons per cycle for the cycle type under test.
T=inlet water temperature rise=measured inlet water temperature—55°F.
K=specific heat of water in kilowatt-hours per gallon per degree fahrenheit=.0240."

All other requirements of 10 CFR 430, Subpart B, Appendix C, would remain unchanged.

Norris Industries, Inc.

R. James Shaffer,

Vice President and General Counsel, Norris Industries, Inc., One Golden Shore, Long Beach, California 90802, (213) 435-6676.

November 5, 1980.

[FR Doc. 80-40692 Filed 12-30-80; 8:45 am]

BILLING CODE 6450-01-M

Economic Regulatory Administration

[ERA Docket No. 81-03-LNG]

Brooklyn Union Gas Co., Temporary Emergency Export of Natural Gas to Canada

AGENCY: Economic Regulatory Administration, Department of Energy.

ACTION: Notice of application to authorize the temporary emergency export of natural gas to Canada and order granting authorization.

SUMMARY: The Economic Regulatory Administration (ERA) of the Department of Energy (DOE) gives notice of receipt on December 18, 1980, of an application of the Brooklyn Union Gas Company (Brooklyn Union) for authorization to export liquefied natural gas (LNG) to Canada in order to alleviate a temporary emergency LNG supply deficiency being experienced by Gaz Metropolitan Incorporated (Gaz Metro) of Montreal, Quebec. The ERA also gives notice that, because of the immediate nature of the emergency and transportation constraints, it issued an Order conditionally authorizing the export on December 19, 1980.

The application was filed and ERA's conditional authorization was issued pursuant to Section 3 of the Natural Gas Act and DOE Delegation Order No. 0204-54. Protests or petitions to intervene are invited.

DATES: Protests or petitions to intervene are to be filed on or before January 7, 1981.

FOR FURTHER INFORMATION CONTACT:

Lawrence A. DiRicco (Division of Natural Gas), Economic Regulatory Administration, 2000 M Street, N.W., Room 7108, Washington, D.C. 20461, Telephone (202) 653-3220

James K. White (Acting Assistant General Counsel for Natural Gas and Mineral Leasing), 1000 Independence Ave., S.W., Forrestal Bldg., Room 5E-064, Washington, D.C. 20585, Telephone (202) 252-2900

SUPPLEMENTARY INFORMATION: In its application Brooklyn Union proposes to exchange up to 400,000 Mcf of LNG with Gaz Metro for a volume of Canadian natural gas of equivalent heating value. The LNG is alleged to be urgently needed by Gaz Metro to meet anticipated supply deficiencies through early January 1981 due to an unanticipated capacity problem on the pipeline serving Gaz Metro and a colder than normal winter.

The LNG to be exchanged is LNG which Brooklyn Union is entitled to receive from Distrigas of Massachusetts Corporation (Distrigas) and located in Distrigas' storage facilities in Everett, Massachusetts. Transgas Incorporated of Lowell, Massachusetts will provide truck transportation service from Everett to Montreal. Transgas must transport a substantial portion of the LNG prior to December 26, 1980 because of prior commitments of available truck capacity. Deliveries are expected to be completed by January 15, 1981. Gaz Metro will pay any and all costs incurred in connection with the transportation of the LNG to Montreal.

The volumes of Canadian natural gas equivalent in heating value to the LNG exchange will be delivered by TransCanada Pipelines Limited (TransCanada) for the account of Gaz Metro to Tennessee Gas Pipeline Company (Tennessee), at the existing TransCanada/Tennessee interconnection near Niagara Falls, New York, and will be transported by Tennessee to Brooklyn Union's meter station at White Plains, New York. Gaz Metro will pay any and all costs incurred in connection with the transportation of the natural gas to White Plains and will provide the fuel for the transportation service.

Because of the need for an immediate decision, public notice by ERA was not feasible prior to issuance of an order. A copy of the DOE/ERA Order issued December 19, 1980 conditionally authorizing the export is appended to this notice. By the terms of the Order, Brooklyn Union may export up to 400,000 Mcf of LNG during the thirty days after issuance of the Order and may import volumes of natural gas equivalent in heating value to any LNG exported, during the sixty days after issuance.

Other Information

The ERA invites protests or petitions for intervention in the proceeding. Such protests or petitions are to be filed with the Economic Regulatory Administration, Room 7108, RG-55, 2000 M Street, NW., Washington, D.C. 20461, in accordance with the requirements of the applicable rules of practice and procedure (18 CFR 1.8 and 1.10). Protests or petitions for intervention will be accepted for consideration if filed no later than 4:30 p.m., on January 7, 1981.

Any person wishing to become a party to the proceeding or to participate as a party in any hearing therein must file a petition to intervene. Protests filed with the ERA will be considered in determining the appropriate action to be taken, but will not serve to make protestants parties to the proceeding.

A hearing will not be held unless a motion for a hearing is made by any party and is granted by ERA, or if the ERA on its own motion believes that a hearing is required. A party filing a motion for hearing must demonstrate how a hearing will advance the proceeding. If a hearing is ordered, due notice will be given to the parties.

A copy of Brooklyn Union's application is available for public inspection and copying in Room 7108, 2000 M Street NW., Washington, D.C. 20461, between the hours of 8:00 a.m. and 4:30 p.m., Monday through Friday, except Federal holidays. The ERA order issued December 19, 1980 is appended to this notice.

Issued in Washington, D.C. on December 23, 1980.

F. Scott Bush,

Assistant Administrator, Office of Regulatory Policy, Economic Regulatory Administration.

The Brooklyn Union Gas Co.; Order Authorizing the Temporary Emergency Exportation of Liquefied Natural Gas to Canada and the Importation of Natural Gas From Canada

December 19, 1980.

On December 18, 1980, the Brooklyn Union Gas Company (Brooklyn Union) filed an application with the Economic Regulatory Administration (ERA) under section 3 of the Natural Gas Act, seeking authorization for a temporary emergency exportation of liquefied natural gas (LNG) to Gaz Metropolitain, Incorporated (Gaz Metro) of Montreal, Quebec, Canada, and a temporary authorization to import natural gas from Canada.

As more fully described in its application, Brooklyn Union states that the LNG is urgently needed by Gaz Metro to meet anticipated gas supply deficiencies. Exportation of the LNG is expected to be completed by January 15, 1981. Brooklyn Union also states that because of limited LNG truck transportation capacity, the transporter must transport a substantial portion of the LNG prior to December 26, 1980, or will be unable to guarantee timely deliveries to Gaz Metro.

Brooklyn Union intends to make available on an exchange basis up to 400,000 Mcf of LNG which it is entitled to receive from Distrigas of Massachusetts (Distrigas) at Distrigas' Everett, Massachusetts, storage facility. Gaz Metro will pay any costs and expenses incurred in connection with the transportation of the LNG to Montreal.

The LNG will be exchanged for a volume of Canadian natural gas of equivalent heating value to be imported by Brooklyn Union. That gas will be delivered by TransCanada Pipe Lines Limited (TransCanada) for the account of Gaz Metro to Tennessee Gas Pipeline Company for ultimate delivery to Brooklyn Union. All natural gas deliveries will be made within sixty days from the date export of the LNG commences.

Brooklyn Union states that it will incur no costs or expenses incident to the exchange and that the exchange will not impair its ability to render natural gas service to its customers.

Based on the description provided by Brooklyn Union of the circumstances

surrounding the proposed exportation of LNG and importation of natural gas, we find at this time that the proposed export and import are not inconsistent with the public interest and good cause exists for issuing a temporary authorization without delay. Based on available information, the export will only be needed for 30 days and, therefore, we have so limited the term of the export authorization.

Our granting of the requested authorizations in no way is intended to limit our further review of the validity of the representations set forth in the application and to take further action or hold further proceedings as may be necessary to remedy any unforeseen inconsistency with the public interest. Notice of this order and the application upon which it is based will be published in the Federal Register as soon as is practicable and will invite the filing of petitions to intervene by interested persons.

Order

For the reasons set forth above, ERA hereby orders that:

A. Pursuant to Section 3 of the Natural Gas Act, authorization is granted to the Brooklyn Union Gas Company (Brooklyn Union) to export up to 400,000 Mcf of LNG to Gaz Metropolitain, Incorporated (Gaz Metro), effective immediately and continuing through the thirtieth day after the date of this Order.

B. Pursuant to Section 3 of the Natural Gas Act, authorization is granted to Brooklyn Union to import from Gaz Metro a volume of natural gas of equivalent heating value of any LNG exported pursuant to Ordering Paragraph A, effective immediately and continuing through the sixtieth day after the date of this order.

C. Pursuant to Section 3 of the Natural Gas Act, the authorizations granted herein are conditioned upon the following:

(1) That Brooklyn Union ensure that the exportation of any LNG pursuant to Ordering Paragraph A will not impair its ability to render natural gas service at reasonable rates to its customers and that neither Brooklyn Union or its customers incur any costs or expenses incident to the authorized exportation and importation, or

(2) That Brooklyn Union take whatever steps are necessary to ensure that only the volumes of LNG necessary to meet the temporary supply emergency of Gaz Metro be exported, and

(3) That Brooklyn Union be bound by any further orders issued in this docket.

Issued in Washington, D.C. on December 19, 1980.

Hazel R. Rollins,

Administrator, Economic Regulatory Administration.

[FR Doc. 80-40685 Filed 12-30-80; 8:45 am]

BILLING CODE 6450-01-M

[ERA Docket No. 80-CERT-044]

Public Service Electric and Gas Co.; Application for Certification of the Use of Natural Gas To Displace Fuel Oil

Public Service Electric and Gas Company (Public Service), 80 Park Place, Newark, New Jersey 07101, filed an application on December 2, 1980, with the Economic Regulatory Administration (ERA) for certification of an eligible use of natural gas to displace fuel oil at eight of its electric generating stations located in New Jersey: Bergen in Ridgefield; Essex in Newark; Hudson in Jersey City; Kearney in Kearney; Linden in Linden; Sewaren in Sewaren; Edison in Edison; and Mercer in Trenton, pursuant to 10 CFR Part 595 (44 FR 47920, August 16, 1979). More detailed information is contained in the application on file and available for public inspection at the ERA, Division of Natural Gas Docket Room, Room 7108, RG-55, 2000 M Street, NW., Washington, D.C. 20461, from 8:30 a.m.-4:30 p.m., Monday through Friday, except Federal holidays.

In its application, Public Service states that the volume of natural gas for which it requests certification is approximately eight billion cubic feet. This volume is estimated to displace the use of approximately 1,200,000 barrels of No. 6 fuel oil (0.3 percent sulfur) and approximately 32,000 barrels of No. 2 fuel oil (0.2 percent sulfur) or kerosene (0.1 percent sulfur) per year.

The quantities at each location are subject to considerable variation with changes in demand and availability of the various generating units, but estimated gas usage and resulting oil displacement volumes are listed below:

Location	Estimated Volume (MMCF)*	Estimated Oil Displacement (000 BBL)	
		0.3% sulfur No. 6 oil	0.2% sulfur No. 2 oil or 0.1% sulfur kerosene
1. Bergen Generating Station, Ridgefield, N.J.	3552	552	.....
2. Essex Generating Station, Newark, N.J.	100	.....	10
3. Hudson Generating Station, Jersey City, N.J.	3088	472	.....
4. Kearny Generating Station, Kearny, N.J.	.....	.....	.....
5. Linden Generating Station, Linden, N.J.	.....	.....	.....
6. Sewaren Generating Station, Sewaren, N.J.	1160	176	.....
7. Edison Generating Station, Edison, N.J.	100	.....	10
8. Mercer Generating Station, Trenton, N.J.	.....	.....	.....
Totals	8,000	1,200	32

*MMCF is million cubic feet.

The eligible seller is the National Fuel Gas Distribution Corporation, 10 Lafayette Square, Buffalo, New York 14203. The gas would be transported by the Transcontinental Gas Pipeline Corporation. P.O. Box 1396, Houston, Texas 77001.

Public Service has previously been issued certification by the ERA allowing purchases of natural gas from various eligible sellers for use at the same eight electric generating stations named in this certification as follows:

ERA Docket No.	Amount	Remarks
79-CERT-020	24.1 Bcf/yr	Expired June 24, 1980, and recertified as 80-CERT-020
80-CERT-014	5 Bcf/yr	Effective May 5, 1980
80-CERT-017	4 Bcf/yr	Effective May 5, 1980
80-CERT-020	17.5 Bcf/yr	Recertification of 79-CERT-020 and effective June 25, 1980
80-CERT-028	1 Bcf/yr	Effective September 17, 1980
80-CERT-032	16 MMcf/day	Effective September 30, 1980, and expired October 31, 1980

In order to provide the public with as much opportunity to participate in this proceeding as is practicable under the circumstances, we are inviting any person wishing to comment concerning this application to submit comments in writing to the Economic Regulatory Administration, Room 7108, RG-55, 2000 M Street, NW., Washington, D.C. 20461, Attention: Mr. Albert F. Bass, by January 12, 1981.

An opportunity to make an oral presentation of data, views, and arguments either against or in support of this application may be requested by any interested person in writing within

the ten (10) day comment period. The request should state the person's interest, and, if appropriate, why the person is a proper representative of a group or class of persons that has such an interest. The request should include a summary of the proposed oral presentation and a statement as to why an oral presentation is necessary. If ERA determines that an oral presentation is necessary, further notice will be given to Public Service and any persons filing comments and will be published in the Federal Register.

Issued in Washington, D.C., on December 22, 1980.

F. Scott Bush,

Assistant Administrator, Office of Regulatory Policy, Economic Regulatory Administration.

[FR Doc. 80-40619 Filed 12-30-80; 8:45 am]

BILLING CODE 6450-01-M

Energy Information Administration

1980 Manufacturing Industries Energy Consumption Study and Survey of Large Combustors, Form EIA-463

The U.S. Department of Energy has recently mailed out Form EIA-463. The information collected from this study will allow the Department to meet several statutory and regulatory mandates. These include, but are not limited to, the following: preparation of contingency plans for the purposes of advising the President should specific fuels be unavailable due to international events, labor stoppages, distribution malfunctions, or weather; forecasts of mid- and long-range energy needs in the industrial sector as required by the Congress; analysis of potential incentives for the conversion of certain capital equipment: a better understanding of a large percent of the Nation's energy consumption; and the need to determine the potential for the conversion of certain combustors and/or processes to alternative and more plentiful energy supplies.

In view of the importance of these data, industries' desire to provide quality data, and the possible difficulties encountered by mailing the questionnaires over the holiday season, the Department of Energy will grant reasonable extensions beyond the normal filing date on a company by company basis. Requests for extensions should be sent to Mr. Stephen J. Dienstfrey, Industrial Survey Manager, U.S. Department of Energy, P.O. Box 2100, Rockville, Maryland 20852. Further clarification of this notice can be obtained by calling the Survey Receipt Center at (800) 638-6584.

Establishments which operate any boiler, gas turbine, internal combustion engine and/or combined cycle units with a maximum design firing rate of 50 million Btu/hr or greater and have not received a copy of Form EIA-463 should contact the above address for inclusion in this study. This study is mandatory under the Federal Energy Administration Act of 1974 (Pub. L. 93-275), and the Powerplant and Industrial Fuel Use Act of 1978, (Pub. L. 95-620).

Issued in Washington, D.C., December 24, 1980.

Albert H. Linden, Jr.,

Acting Administrator, Energy Information Administration.

[FR Doc. 80-40695 Filed 12-30-80; 8:45 am]

BILLING CODE 6450-01-M

Office of Energy Research

Energy Research Advisory Board; Advanced Conservation Technology Subpanel; Open Meeting

Notice is hereby given of the following meeting:

Name: Advanced Conservation Technology Subpanel of the Energy Research Advisory Board (ERAB). ERAB is a Committee consitituted under the Federal Advisory Committee Act (Public Lw 92-463, 86 Stat. 770).

Date and time: January 14, 1981—9:30 am to 4:00 pm.

Place: Department of Energy, Forrestal Building, Room 4E-069, 1000 Independence Avenue, SW., Washington, D.C. 29585.

Contact: Eudora M. Taylor, Staff Assistant, Energy Research Advisory Board, Department of Energy, Forrestal Building—M.S. 3F-032, 1000 Independence Avenue, SW., Washington, D.C. 20858, Telephone 202/252-8933.

Purpose of the parent board: To advise the Department of Energy on the overall research and development conducted in DOE and to provide long-range guidance in these areas to the Department.

Tentative agenda: Review of Updated Outline of Proposed Draft Subpanel Report.

Note.—If the Subpanel does not complete its business on January 14, the meeting will continue on January 15.

Public participation: The meeting is open to the public. Written statments may be filed with the Subpanel either before or after the meeting. Members of the public who wish to make oral statements pertaining to agenda items should contact the Energy Research Advisory Board at the address or telephone number listed above. Requests must be received five days prior to the meetng and reasonable provision will be made to include the presentation on the agenda. The Chairperson of the Subpanel is empowered to conduct the meeting in a fashion that will facilitate the orderly conduct of business.

Transcripts: Available for public review and copying at the freedom of Information Public Reading Room 1E-190, Forrestal Building, 1000 Independence Avenue, SW., Washington, D.C., between 8:00 am and 4:00 pm Monday through Friday, except Federal Holidays.

Issued at Washington, D.C. on December 23, 1980.

N. D. Pewitt,

Deputy Director of Energy Research.

[FR Doc. 80-40633 Filed 12-30-80; 8:45 am]

BILLING CODE 6450-01-M

Federal Energy Regulatory Commission

[Docket No. CP81-105-000]

Brooklyn Union Gas Co.; Application

December 19, 1980.

Take notice that on December 18, 1980, The Brooklyn Union Gas Company (Applicant), 195 Montaque Street, Brooklyn, New York 11201, filed in Docket No. CP81-105-000 an application pursuant to Section 3 to export liquefied natural gas (LNG) to Canada and to import natural gas from Canada and pursuant to Section 7 of the Natural Gas Act for a certificate of public convenience and necessity authorizing the exchange of up to 400,000 Mcf equivalent of LNG for a volume of Canadian natural gas equivalent in heating value, all as more fully set forth in the application which is on file with the Commission and open to public inspection.

Applicant proposes to exchange 400,000 Mcf of LNG for a volume of Canadian natural gas equivalent in heating value to be delivered by TransCanada PipeLines Limited (TransCanada) for the account of Gaz Metropolitain, Inc. (Gaz Metropolitain). Applicant states that the LNG to be exchanged is LNG which Applicant is presently entitled to receive from Distrigas of Massachusetts Corporation (Distrigas) and is located in Distrigas' storage facilities in Everett, Massachusetts. The LNG would be transported by truck to Montreal for use by Gaz Metropolitain. It is asserted that the LNG is urgently needed by Gaz Metropolitain to meet anticipated supply deficiencies. Applicant states that Transgas, Inc. (Transgas) of Lowell, Massachusetts, which would provide the truck transportation to Montreal is prepared to commence deliveries immediately with deliveries to be completed by January 15, 1981. It is further asserted that Gaz Metropolitain would pay any and all costs and expenses incurred in connection with the transportation of the LNG to Montreal.

Applicant submits that volumes of Canadian natural gas equivalent in

heating value to the LNG exchanged would be delivered by TransCanada for the account of Gaz Metropolitain to Tennessee Gas Pipeline Company, a Division of Tenneco Inc. (Tennessee) at an existing TransCanada/Tennessee interconnection near Niagara Falls, New York. Such gas, it is asserted, would be transported by Tennessee to Applicant's meter station at White Plains, New York, for delivery to Applicant's franchise territory. It is further stated that Gaz Metropolitain would pay any and all costs and expenses incurred in connection with the transportation of the natural gas to White Plains and would provide the fuel for the transportation service. Applicant states that although the natural gas deliveries would commence after the commencement of the LNG deliveries, all natural gas would be made available within 60 days from the date that the exports of LNG commence. It is further explained that Tennessee would transport the gas under the authority of Section 311 of the Natural Gas Policy Act of 1978.

Any person desiring to be heard or to make any protest with reference to said application should on or before January 5, 1981, file with the Federal Energy Regulatory Commission, Washington, D.C. 20426, a petition to intervene or a protest in accordance with the requirements of the Commission's Rules of Practice and Procedure (18 CFR 1.8 or 1.10) and the Regulations under the Natural Gas Act (18 CFR 157.10). All protests filed with the Commission will be considered by it in determining the appropriate action to be taken but will not serve to make the protestants parties to the proceeding. Any person wishing to become a party to a proceeding or to participate as a party in any hearing therein must file a petition to intervene in accordance with the Commission's Rules.

Take further notice that, purusant to the authority contained in and subject to jurisdiction conferred upon the Federal Energy Regulatory Commission by Sections 7 and 15 of the Natural Gas Act and the Commission's Rules of Practice and Procedure, a hearing will be held without further notice before the Commission or its designee on this application if no petition to intervene is filed within the time required herein, if the Commission on its own review of the matter finds that a grant of the certificate is required by the public convenience and necessity. If a petition for leave to intervene is timely filed, or if the Commission on its own motion believes that a formal hearing is required, further notice of such hearing will be duly given.

Under the procedure herein provided for, unless otherwise advised, it will be unnecessary for Applicant to appear or be represented at the hearing.

Kenneth F. Plumb,

Secretary.

[FR Doc. 80-40561 Filed 12-30-80; 8:45 am]

BILLING CODE 6450-85-M

[Volume 337]

Determinations by Jurisdictional Agencies Under the Natural Gas Policy Act of 1978

December 22, 1980.

The above notices of determination were received from the indicated jurisdictional agencies by the Federal Energy Regulatory Commission pursuant to the Natural Gas Policy Act of 1978 and 18 CFR 274.104. Negative determinations are indicated by a "D" after the section code. Estimated annual production (PROD) is in million cubic feet (MMcf). An (*) preceding the control number indicates that other purchasers are listed at the end of the notice.

The applications for determination in these proceedings together with a copy or description of other materials in the record on which such determinations were made are available for inspection, except to the extent such material is treated as confidential under 18 CFR 275.206, at the Commission's Division of Public Information, Room 1000, 825 North Capitol Street, N.E., Washington, D.C. 20426.

Persons objecting to any of these determinations may, in accordance with 18 CFR 275.203 and 18 CFR 275.204, file a protest with the Commission on or before January 15, 1981.

Please reference the FERC Control Number (JD No) in all correspondence related to these determinations.

Kenneth F. Plumb,

Secretary.

BILLING CODE 6450-85-M

JD NO	JA DKT	API NO	SEC	D	WELL NAME	FIELD NAME	PROD	PURCHASER
KANSAS CORPORATION COMMISSION								
-DOME PETROLEUM CORP					RECEIVED: 12/05/80 JA: KS			
8107708	K-80-0397	1507520305	103		SPUR LAND #1-A	BRADSHAW	91.3	SUNFLOWER ELECTRIC C
-ENERGY RESERVES GROUP INC					RECEIVED: 12/05/80 JA: KS			
8107707	K-79-1901	1509500000	108		EDNA M BLACKWELL #2	SPIVEY GRABS	8.6	KANSAS POWER & LIGHT
LOUISIANA OFFICE OF CONSERVATION								
-ALLIANCE EXPLORATION CORPORATION					RECEIVED: 12/03/80 JA: LA			
8107632		1705721658	102		DR E C HANSEN NO 1 166295	ROUSSEAU	1095.0	TEXAS GAS TRANSMISSI
-AMERICAN QUASAR PETROLEUM CO					RECEIVED: 12/05/80 JA: LA			
8107709		1702321424	102		DIXIE RICE WELL #1	SEC 24 T12S R3W	1825.0	COLUMBIA GAS DEVELOP
8107709		1702321424	103		DIXIE RICE WELL #1	SEC 24 T12S R3W	1825.0	COLUMBIA GAS DEVELOP
NEW MEXICO DEPARTMENT OF ENERGY & MINERALS								
-ADAMS EXPLORATION CO					RECEIVED: 12/04/80 JA: NM			
8107650		3002526733	103		STATE 16 NO 1		255.5	NORTHERN NATURAL GAS
-AMERADA HESS CORPORATION					RECEIVED: 12/04/80 JA: NM			
*8107633		3002500000	108		STATE WEB #3 (DUAL - OIL & GAS)	EUMONT	10.3	EL PASO NATURAL GAS
-AMOCO PRODUCTION CO					RECEIVED: 12/04/80 JA: NM			
8107702		3002526294	102		ANDERSON 3 COM #1	ANDERSON RANCH	1166.0	NATURAL GAS PIPELINE
8107663		3004524177	103		GALLEGOS CANYON UNIT NO 93E	BASIN DAKOTA	30.0	EL PASO NATURAL GAS
8107686		3004511574	108		GALLEGOS CANYON UNIT WELL #199	BASIN DAKOTA	20.0	EL PASO NATURAL GAS
8107694		3004523986	103		R BRUCE SULLIVAN NO 3E	BASIN DAKOTA	30.0	EL PASO NATURAL GAS
8107662		3002526695	103		STATE FU #4	AIRSTRIP UPPER BONE SPRI	1.0	WARREN PETROLEUM CO
8107701		3002500000	102		STATE GH WELL NO 1	TOWNSEND MORROW	1795.0	NATURAL GAS PIPELINE
8107699		3001523026	102		STATE HK COM #1	WILDCAT MORROW	546.1	
-ARCO OIL AND GAS COMPANY					RECEIVED: 12/04/80 JA: NM			
8107645		3002526689	103		W C ROACH #6	EUMONT YATES 7R QUEEN GA	300.0	NORTHERN NATURAL GAS
-CONSOLIDATED OIL & GAS INC					RECEIVED: 12/04/80 JA: NM			
8107652		3004524285	103		KLINE #1-M	BASIN-DAKOTA	0.0	SOUTHERN UNION GATHE
8107653		3004524285	103		KLINE #1-M	BLANCO MESAVERDE	0.0	SOUTHERN UNION GATHE
-COQUINA OIL CORPORATION					RECEIVED: 12/04/80 JA: NM			
8107642		3001522028	108		BASS STATE NO 1	NORTH BURTON (PENN)	70.0	EL PASO NATURAL GAS
-EL PASO NATURAL GAS COMPANY					RECEIVED: 12/04/80 JA: NM			
8107643		3003920100	108		CARTER MESA COM #1	OTERO-CHACRA GAS	22.0	EL PASO NATURAL GAS
8107641		3003905573	108		LINDRITH UNIT #49	BLANCO SOUTH - PICTURED	20.0	EL PASO NATURAL GAS
8107689		3003907203	108		SAN JUAN 27-5 UNIT #7	BLANCO-MESAVERDE GAS	16.0	EL PASO NATURAL GAS
8107640		3003907097	108		SAN JUAN 28-6 UNIT #67	BLANCO MESAVERDE	19.0	EL PASO NATURAL GAS
8107658		3003907282	108		SAN JUAN 28-7 UNIT NP #94 PC & MV	SOUTH BLANCO-PICTURED CL	18.0	EL PASO NATURAL GAS
8107697		3003922313	103		SAN JUAN 30-6 UNIT #14A	BLANCO MESAVERDE	220.0	EL PASO NATURAL GAS

VOLUME 337 PAGE 002

JD NO	JA CKT	API NO	SEC	D	WELL NAME	FIELD NAME	PROD	PURCHASER
8107644		3002500000	108		SHELL STATE COM E #1	EUMONT QUEEN	26.0	EL PASO NATURAL GAS
*ENERGY RESERVES GROUP INC					RECEIVED: 12/04/80 JA: NM			
8107671		3004509636	108		FARNSWORTH GAS COM B #1	BASIN DAKOTA	18.7	EL PASO NATURAL GAS
8107670		3004523944	103		FEDERAL GAS COM UNIT #1-A	BLANCO MESAVERDE	324.0	EL PASO NATURAL GAS
*ENSERCH EXPLORATION INC					RECEIVED: 12/04/80 JA: NM			
8107635		3000560731	103		J G OBRIEN NO 2	WILDCAT	554.0	
*GETTY OIL COMPANY					RECEIVED: 12/04/80 JA: NM			
8107688		3002500000	108		B E SHIPP NO 2	LOVINGTON PADDOCK	1.0	PHILLIPS PETROLEUM C
8107690		3002510190	108		BAKER B NO 10	SOUTH EUNICE SAN ANDRES	3.1	GETTY OIL CO
8107634		3002500000	103		COOPER JAL UNIT WELL NO 154	LANGLIE MATTIX	6.6	EL PASO NATURAL GAS
8107677		3002509556	108		COOPER JAL UNIT WELL NO 303	JALMAT	11.9	EL PASO NATURAL GAS
8107638		3004523632	103		DON TURRIETTA WELL NO 1	BLANCO PICTURED CLIFFS	50.0	EL PASO NATURAL GAS
8107698		3002526772	102		GETTY 2 STATE WELL NO 2	EAST GRAMA RIDGE - MORRO	0.0	TUCO INC
8107691		3002510811	108		J C JOHNSON WELL NO 4	JALMAT GAS	5.0	INTERNORTH INC
8107667		3002526909	103		MYERS LANGLIE MATTIX UNIT #102	LANGLIE MATTIX	90.0	EL PASO NATURAL GAS
8107676		3002504660	108		SKELLY B STATE WELL NO 2	EUNICE-MONUMENT GRAYBURG	74.5	PHILLIPS PETROLEUM C
8107684		3002510674	108		SKELLY PENROSE B UNIT WELL NO 58	LANGLIE MATTIX	2.1	GETTY OIL CO
*GULF OIL CORPORATION					RECEIVED: 12/04/80 JA: NM			
8107678		3002511862	108		ARNOTT-RAMSAY (NCT-B) #2	JALMAT GAS	4.0	NORTHERN NATURAL GAS
*HARVEY E YATES CO					RECEIVED: 12/04/80 JA: NM			
8107668	T-2	3002526937	103		LOVINGTON 29 STATE #1	NE LOVINGTON PEN	100.0	
8107639		3001523278	102		TRAVIS 13 STATE 1	SOUTH EMPIRE MORROW	365.0	EL PASO NATURAL GAS
*J GREGORY MERRION					RECEIVED: 12/04/80 JA: NM			
8107649		3003922441	103		FEDERAL COM #4	BALLARD PICTURED CLIFFS	100.0	EL PASO NATURAL GAS
*J M HUBER CORPORATION					RECEIVED: 12/04/80 JA: NM			
8107661		3001522503	103		FEATHERSTONE-MCCOY NO 2	YARROW DELAWARE	180.0	TRANSWESTERN PIPELIN
*JAKE L HAMON					RECEIVED: 12/04/80 JA: NM			
8107700		3002500000	103		STATE E-8913 #2	NORTH OSUDO MORROW	1825.0	PHILLIPS PETROLEUM C
*LIVELY EXPLORATION COMPANY					RECEIVED: 12/04/80 JA: NM			
8107672		3004521262	108		LIVELY WELL NO 15	SAN JUAN (BASIN DAKOTA)	20.0	EL PASO NATURAL GAS
8107674		3004521579	108		LIVELY WELL NO 25	SAN JUAN	15.0	EL PASO NATURAL GAS
*MEWBOURNE OIL COMPANY					RECEIVED: 12/04/80 JA: NM			
8107685		3001500000	108		JOHNSON #1 WELL	CEMETARY	60.0	GAS CO OF NEW MEXICO
8107683		3001500000	108		NEW MEXICO OSAGE COM #1	CEMETARY (MORROW)	13.0	GAS CO OF NEW MEXICO
*MINERALS INC					RECEIVED: 12/04/80 JA: NM			
8107669		3002526690	102		LLANO 3 STATE COM NO 1	EAST GRAMA RIDGE MORROW	0.0	PHILLIPS PETROLEUM C
*MWJ PRODUCING COMPANY					RECEIVED: 12/04/80 JA: NM			
8107673		3002500000	103		BAUM STATE #1	BAUM (UPPER PENN)	3.0	WARREN PETROLEUM CO
*PHILLIPS PETROLEUM COMPANY					RECEIVED: 12/04/80 JA: NM			
8107679		3002502881	108		E VACUUM GB/SA TR 2622 #034	VACUUM GB/SA	5.0	EL PASO NATURAL GAS
8107637		3002526652	103		E VACUUM GB/SA TR 3202 NO 011	VACUUM GB/SA	10.0	EL PASO NATURAL GAS
8107657		3002526679	103		E VACUUM GB/SA TR 3332 NO 002	VACUUM GB/SA	19.0	EL PASO NATURAL GAS
8107659		3002526658	103		E VACUUM GB/SA TR 3345 NO 001	VACUUM GB/SA	124.0	EL PASO NATURAL GAS
8107693		3002526682	103		E VACUUM GB/SA TR 3333 #007	VACUUM GB/SA	18.0	EL PASO NATURAL GAS
8107636		3002526521	103		E VACUUM GB/SA TR 3440 #005	VACUUM GB/SA	30.0	EL PASO NATURAL GAS
8107660		3002526685	103		E VACUUM GB/SA TR 3456 #009	VACUUM GB/SA	1.0	EL PASO NATURAL GAS
8107656		3002526657	103		EVGB/SA UNIT TRACT 3333 #008	VACUUM GB/SA	25.0	EL PASO NATURAL GAS
8107675		3002524207	108		SANTA FE #125	VACUUM N (ABO)	8.0	EL PASO NATURAL GAS
*READ & STEVENS INC					RECEIVED: 12/04/80 JA: NM			
8107695		3002526783	103		QUAIL STATE NO 5	QUAIL QUEEN	5.0	WARREN PETROLEUM CO
8107647		3002526853	103		QUAIL STATE NO 6	QUAIL QUEEN	4.0	WARREN PETROLEUM CO
*SHELL OIL CO					RECEIVED: 12/04/80 JA: NM			

VOLUME 337 PAGE 003

JD NO	JA DKT	API NO	SEC	D	WELL NAME	FIELD NAME	PROD	PURCHASER
8107664		3002500000	108		PEARL QUEEN EAST UNIT #39	PEARL	0.3	PHILLIPS PETROLEUM C
8107687		3002500000	108		STATE - SEC 2	WANTZ ABO	4.1	GETTY OIL CO
8107681		3002500000	108		STATE J #2	EUNICE NORTH	6.2	GETTY OIL CO
8107682		3002500000	108		STATE J #4	EUNICE NORTH	12.6	PHILLIPS PETROLEUM C
8107692		3002500000	108		STATE SEC 2 4	TUBB	4.0	GETTY OIL CO
-SOUTHLAND ROYALTY CO					RECEIVED: 12/04/80 JA: NM			
8107648		3004523958	103		PATTERSON A COM #1E	BASIN	90.0	SOUTHERN UNION GATHE
-SUPRON ENERGY CORPORATION					RECEIVED: 12/04/80 JA: NM			
8107651		3004524181	103		HAYNIE 2	BLANCO MESAVERDE	583.0	SOUTHERN UNION GATHE
8107696		3004524181	103		HAYNIE 2	BASIN DAKOTA	261.0	SOUTHERN UNION GATHE
-THRESHOLD DEVELOPMENT CO					RECEIVED: 12/04/80 JA: NM			
8107665		3001523289	103		CONOCO 10 A STATE NO 1Y (MORROW)	TURKEY TRACK MORROW	547.5	CONOCO INC
8107666		3001523289	103		CONOCO 10-A STATE NO 1-Y (ATOKA)	TURKEY TRACK ATOKA	547.5	CONOCO INC
-WM O ROBB					RECEIVED: 12/04/80 JA: NM			
8107680		3001521571	108		A O ROGERS COM #1	ATOKA PENN (GAS)	5.3	TRANSWESTERN PIPELIN
-YATES PETROLEUM CORP					RECEIVED: 12/04/80 JA: NM			
8107655		3001523419	103		GREASEWOOD BD STATE #10	PENASCO DRAW SA-YESO ASS	0.0	TRANSWESTERN PIPELIN
-YATES PETROLEUM CORPORATION					RECEIVED: 12/04/80 JA: NM			
8107646		3001523171	103		JOHNSON FE #2	EAGLE CREEK SA	0.0	TRANSWESTERN PIPELIN
8107654		3001523416	103		PENASCO DRAW SA YESO ASSOCIATION	PENASCO DRAW SA YESO ASS	0.0	TRANSWESTERN PIPELIN
**********								
NEW YORK DEPARTMENT OF ENVIRONMENTAL CONSERVATION								
**********								
-TROY ENERGY CO					RECEIVED: 12/04/80 JA: NY			
8107705	674	3102912916	108	Y	HANN WELL #1	EVANS	13.7	NATIONAL FUEL GAS DI
8107706	677	3102913584	108	Y	SNYDER WELL #1	EVANS	26.2	NATIONAL FUEL GAS DI
-TROY PIPE AND SUPPLY CO INC					RECEIVED: 12/04/80 JA: NY			
8107704	670	3101311581	108	Y	HAHN WELL #1	PORTLAND	23.3	NATIONAL FUEL GAS DI
8107703	671	3101311651	108	Y	HAHN WELL #2	PORTLAND	66.6	NATIONAL FUEL GAS DI
**********								
WEST VIRGINIA DEPARTMENT OF MINES								
**********								
-APPALACHIAN EXPLORATION & DEVEL INC					RECEIVED: 12/05/80 JA: WV			
8107711		4701900416	102		J EAGEN #1	HT COVE	42.0	EQUITABLE GAS CO
8107713		4708100505	103		POCAHONTAS LAND CORP N-1	SLAB FORK	15.0	COLUMBIA GAS TRANSMI
8107712		4706700516	102		PRUCCIA HUGHES #1	GRANT	42.0	EQUITABLE GAS CO
-ASHLAND EXPLORATION INC					RECEIVED: 12/05/80 JA: WV			
8107714		4703903518	103		EASTERN ASSOCIATED COAL #66	PAINT CREEK	22.0	COLUMBIA GAS TRANSMI
-BEREA OIL AND GAS CORPORATION					RECEIVED: 12/05/80 JA: WV			
8107710		4700121215	102		C BOOTH #1	BARKER	20.0	
8107717		4700121213	102		JUNIOR BILLER #1	VALLEY	20.0	
8107718		4700121211	102		R QUATTRO #1	VALLEY	20.0	
8107716		4700121197	102		TALBOTT LUMBER CO #1	VALLEY	20.0	
8107715		4700121204	102		W T GEORGE #1	VALLEY	20.0	
**********								
** U.S. GEOLOGICAL SURVEY - ALBUQUERQUE,NM								
**********								
-AMOCO PRODUCTION CO					RECEIVED: 12/05/80 JA: NM 4			
8107801	NM 1423-80	3004524101	103		J C GORDON D WELL #1E	BASIN DAKOTA	29.5	EL PASO NATURAL GAS
-ARCO OIL AND GAS COMPANY					RECEIVED: 12/05/80 JA: NM 4			
8107745	NM 1249-80	3004524276	103		SCHLOSSER NN FED 2E	BASIN DAKOTA	200.0	EL PASO NATURAL GAS
-CHACE OIL COMPANY INC					RECEIVED: 12/05/80 JA: NM 4			

VOLUME 337 PAGE 004

JD NO	JA DKT	API NO	SEC	D WELL NAME	FIELD NAME	PROD	PURCHASER
8107799	NM-1411-80	3003921827	103	JICARILLA 70-7	SOUTH LINDRITH GALLUP-DA	108.0	EL PASO NATURAL GAS
*CONOCO INC				RECEIVED: 12/05/80 JA: NM 4			
8107770	NM-1339-80	3002526744	103	LOCKHART B NO 9	NEW MEXICO FEDERAL UNIT	245.0	EL PASO NATURAL GAS
*CONSOLIDATED OIL & GAS INC				RECEIVED: 12/05/80 JA: NM 4			
8107741	NM-1224-80	3003921510	108	TRIBAL C 11-A	BLANCO MESAVERDE	21.0	NORTHWEST PIPELINE C
*DEPCO INC				RECEIVED: 12/05/80 JA: NM 4			
8107734	NM-1136-80	3000520483	108	BEALL FEDERAL WELL NO 1	WHITE RANCH (MORROW)	7.0	EL PASO NATURAL GAS
*EL PASO EXPLORATION CO				RECEIVED: 12/05/80 JA: NM 4			
8107784	NM-1396-80-A	3003922273	103	JICARILLA 152W #1A	BLANCO MESAVERDE	150.0	NORTHWEST PIPELINE C
8107785	NM-1396-80-B	3003922273	103	JICARILLA 152W #1A	SOUTH BLANCO PICTURED CL	50.0	NORTHWEST PIPELINE C
8107791	NM-1401-80	3003922272	103	JICARILLA 152W #6	BASIN DAKOTA	70.0	NORTHWEST PIPELINE C
8107742	NM-1239-80	3004506443	108	SAN JUAN 27-8 B #4	BLANCO-SOUTH PICTURED CL	22.0	NORTHWEST PIPELINE C
*EL PASO NATURAL GAS COMPANY				RECEIVED: 12/05/80 JA: NM 4			
8107733	NM-1042-80	3004520898	108	ATLANTIC A #12	BLANCO - PICTURED CLIFFS	22.0	EL PASO NATURAL GAS
8107790	NM-1400-80	3004524264	103	ATLANTIC A #15	BLANCO PICTURED CLIFFS	90.0	EL PASO NATURAL GAS
8107793	NM-1403-80	3004524203	103	ATLANTIC B #16	BLANCO MESAVERDE	50.0	EL PASO NATURAL GAS
8107794	NM-1404-80	3004524062	103	ATLANTIC B #23	BLANCO PICTURED CLIFFS	90.0	EL PASO NATURAL GAS
8107798	NM-1408-80	3004524061	103	ATLANTIC B #24	BLANCO PICTURED CLIFFS	90.0	EL PASO NATURAL GAS
8107731	NM-1021-80	3003920898	108	CANYON LARGO UNIT #242	BALLARD - PICTURED CLIFF	21.0	EL PASO NATURAL GAS
8107782	NM-1380-80	3003906187	108	CANYON LARGO UNIT #65	BLANCO SOUTH - PICTURED	21.0	EL PASO NATURAL GAS
8107780	NM-1362-80	3004508606	108	FANNIN #1	AZTEC-PICTURED CLIFFS GA	19.0	EL PASO NATURAL GAS
8107725	NM-0519-80	3004506444	108	FLORANCE D #10	BLANCO-MESAVERDE GAS	24.0	EL PASO NATURAL GAS
8107797	NM-1407-80	3004524078	103	HANCOCK B #5E	BASIN DAKOTA	90.0	EL PASO NATURAL GAS
8107727	NM-0532-80	3004521543	108	HUBBELL #16	AZTEC-FRUITLAND GAS	21.0	EL PASO NATURAL GAS
8107722	NM-0268-80	3004520395	108	HUERFANO UNIT #193	BASIN-DAKOTA GAS	17.5	EL PASO NATURAL GAS
*8107732	NM-1039-80	3003906409	108	JICARILLA F #8	SOUTH BLANCO - PICTURED	20.0	EL PASO NATURAL GAS
8107726	NM-0523-80	3004320110	108	JICARILLA 183 #6	BALLARD-PICTURED CLIFFS	20.0	EL PASO NATURAL GAS
8107768	NM 1332-80-A	3004523719	103	JONES A #4A	BLANCO MESAVERDE	250.0	EL PASO NATURAL GAS
8107769	NM-1332-80-B	3004523719	103	JONES A #4A	SOUTH BLANCO PICTURED CL	90.0	EL PASO NATURAL GAS
8107737	NM-1189-80	3003920919	108	LINDRITH UNIT #77	BLANCO SOUTH - PICTURED	22.0	EL PASO NATURAL GAS
8107779	NM-1360-80	3003921809	108	LINDRITH UNIT COM #93	SOUTH BLANCO - PICTURED	18.0	EL PASO NATURAL GAS
8107738	NM-1207-80	3004520893	108	MANSFIELD #12	BLANCO-PICTURED CLIFFS	22.0	EL PASO NATURAL GAS
8107730	NM-0854-80	3004507056	108	MICHENER A NO 1	BLANCO SOUTH-PICTURED CL	21.0	EL PASO NATURAL GAS
8107788	NM-1398-80	3003922227	103	RINCON UNIT #82A	BLANCO MESAVERDE	70.0	EL PASO NATURAL GAS
8107800	NM-1414-80	3004521089	108	ROELOFS #7	BLANCO-PICTURED CLIFFS	17.0	EL PASO NATURAL GAS
8107778	NM 1359-80	3004521031	108	ROELOFS #5	BLANCO-PICTURED CLIFFS	16.0	EL PASO NATURAL GAS
8107766	NM 1331-80A	3003921044	103	SAN JUAN 27-4 UNIT #133	BLANCO MESAVERDE	180.0	EL PASO NATURAL GAS
8107767	NM 1331-80-B	3003921044	103	SAN JUAN 27-4 UNIT #133	BASIN DAKOTA	60.0	EL PASO NATURAL GAS
8107740	NM-1213-80	3003900000	108	SAN JUAN 28-5 UNIT #18	BLANCO-MESAVERDE	20.0	EL PASO NATURAL GAS
8107795	NM-1405-80	3003922203	103	SAN JUAN 28-6 UNIT #11A	BLANCO MESAVERDE	70.0	EL PASO NATURAL GAS
8107736	NM-1188-80	3003920601	108	SAN JUAN 28-6 UNIT #173	SOUTH BLANCO - PICTURED	20.0	EL PASO NATURAL GAS
8107739	NM-1210-80	3003907271	108	SAN JUAN 28-6 UNIT #32	BLANCO - MESAVERDE	18.0	EL PASO NATURAL GAS
8107796	NM-1406-80	3003922225	103	SAN JUAN 28-6 UNIT #67A	BLANCO MESAVERDE	70.0	EL PASO NATURAL GAS
8107771	NM-1341-80	3003922228	103	SAN JUAN 28-6 UNIT #69A	BLANCO MESAVERDE	100.0	EL PASO NATURAL GAS
8107724	NM-0515-80	3003920797	108	SAN JUAN 28-7 UNIT #179	BLANCO-PICTURED CLIFFS G	25.0	EL PASO NATURAL GAS
8107723	NM-0514-80	3003920960	108	SAN JUAN 28-7 UNIT #202 CH & PC	LARGO-CHACRA AND SOUTH B	22.0	EL PASO NATURAL GAS
8107761	NM 1328-80A	3004523848	103	SAN JUAN 28-7 UNIT #94A	BLANCO MESAVERDE	150.0	EL PASO NATURAL GAS
8107762	NM 1328-80-B	3004523848	103	SAN JUAN 28-7 UNIT #94A	SOUTH BLANCO PICTURED CL	30.0	EL PASO NATURAL GAS
8107764	NM-1330-80-A	3003921918	103	SAN JUAN 29-7 UNIT #40A	BLANCO MESAVERDE	200.0	EL PASO NATURAL GAS
8107765	NM-1330-80-B	3003921918	103	SAN JUAN 29-7 UNIT #40A	BASIN DAKOTA	150.0	EL PASO NATURAL GAS
8107786	NM-1397-80-A	3003921917	103	SAN JUAN 29-7 UNIT #65A	BLANCO MESAVERDE	220.0	EL PASO NATURAL GAS
8107787	NM-1397-80-B	3003921917	103	SAN JUAN 29-7 UNIT #65A	BASIN DAKOTA	30.0	EL PASO NATURAL GAS

VOLUME 337 PAGE 005

JD NO	JA DKT	API NO	SEC	D	WELL NAME	FIELD NAME	PROD	PURCHASER
8107792	NM-1402-80	3003921941	103		SAN JUAN 30-6 UNIT #49A	BLANCO MESAVERDE	180.0	EL PASO NATURAL GAS
8107781	NM-1376-80	3003900000	108		SAN JUAN 32-5 UNIT #17	BASIN-DAKOTA	20.0	EL PASO NATURAL GAS
8107777	NM-1348-80	3004521824	108		SCOTT #13	BLANCO - PICTURED CLIFFS	20.0	EL PASO NATURAL GAS
8107735	NM-1180-80	3004522073	108		SCOTT #16	BLANCO - PICTURED CLIFFS	17.0	EL PASO NATURAL GAS
8107783	NM-1394-80	3004511955	108		STOREY B #1	BLANCO MESAVERDE GAS	16.0	EL PASO NATURAL GAS
8107763	NM-1329-80	3004524079	103		SULLIVAN #1A	BLANCO MESAVERDE	150.0	EL PASO NATURAL GAS
8107789	NM-1399-80	3004524069	103		SUNRAY #6	BLANCO PICTURED CLIFFS	70.0	EL PASO NATURAL GAS
-ENERGY RESERVES GROUP INC					RECEIVED: 12/05/80 JA: NM 4			
8107756	NM-1320-80	3004524373	103		E H PIPKIN #11-E	BASIN DAKOTA	144.0	SOUTHERN UNION GATHE
8107757	NM-1321-80	3004524376	103		E H PIPKIN #5-E	BASIN DAKOTA	68.4	SOUTHERN UNION GATHE
-H L BROWN JR					RECEIVED: 12/05/80 JA: NM 4			
8107803	NM-1425-80	3001521041	108		FEDERAL DODD NO 1 WELL LC-028731-A	GRAYBURG JACKSON (MORROW	7.1	TRANSWESTERN PIPE LI
8107755	NM-1316-80	3004120504	103		FEDERAL G NO 1 WELL NM-23018	BLUITT (WOLFCAMP)	90.8	TRANSWESTERN PIPE LI
8107754	NM-1315-80	3004120505	103		FEDERAL J NO 1 WELL NM 23018	BLUITT (WOLFCAMP)	78.9	TRANSWESTERN PIPE LI
-J GREGORY MERRION&ROBERT L BAYLESS					RECEIVED: 12/05/80 JA: NM 4			
8107729	NM-6717-80	3003900000	103		CANADA MESA #1-E	BASIN DAKOTA	200.0	EL PASO NATURAL GAS
8107728	NM-6716-80	3004500000	103		SOUTHLAND #5	WAW FRUITLAND/PICTURED C	85.0	EL PASO NATURAL GAS
-JEROME P MCHUGH					RECEIVED: 12/05/80 JA: NM 4			
8107760	NM-1326-80	3003922338	103		JICARILLA #2E	BASIN DAKOTA	462.0	NORTHWEST PIPELINE C
8107759	NM-1325-80	3003922339	103		JICARILLA #3E	BASIN DAKOTA	918.0	NORTHWEST PIPELINE C
8107758	NM-1324-80	3003922343	103		JICARILLA #4E	BASIN DAKOTA	910.0	NORTHWEST PIPELINE C
-KOCH INDUSTRIES INC					RECEIVED: 12/05/80 JA: NM 4			
8107776	NM-1346-80	3004522767	103		GARDNER #3-A	BLANCO MESA VERDE	183.0	NORTHWEST PIPELINE C
-MESA PETROLEUM					RECEIVED: 12/05/80 JA: NM 4			
8107802	NM-1424-80	3001522561	108		RUNYAN FEDERAL COM #1	RUNYAN RANCH ABO	6.0	NATURAL GAS PIPELINE
-NORTHWEST PIPELINE CORPORATION					RECEIVED: 12/05/80 JA: NM 4			
8107772	NM-1342-80	3003921028	108		SAN JUAN 29-5 UNIT #61	BLANCO MESAVERDE	1.0	EL PASO NATURAL GAS
-ODESSA NATURAL CORPORATION					RECEIVED: 12/05/80 JA: NM 4			
8107720	NM-5068-79	3003921706	108		JICARILLA JV PC NO 108	BALLARD PICTURED CLIFFS	0.0	EL PASO NATURAL GAS
-OKLAHOMA OIL COMPANY					RECEIVED: 12/05/80 JA: NM 4			
8107721	NM-0161-80	3004523030	108		BOLACK B-1 8-28-27N-11W	WEST KUTZ FRUITLAND	15.0	EL PASO NATURAL GAS
-SOUTHLAND ROYALTY CO					RECEIVED: 12/05/80 JA: NM 4			
8107804	NM-1426-80	3004523981	103		DAVIS #11E	BASIN	80.0	SOUTHERN UNION GATHE
8107747	NM 1251-80-A	3004523873	103		DAVIS #7E	BASIN	90.0	SOUTHERN UNION GATHE
8107748	NM 1251-80-B	3004523873	103		DAVIS #7E		50.0	SOUTHERN UNION GATHE
8107749	NM 1253-80-A	3004524146	103		EAST #7E	BASIN	80.0	SOUTHERN UNION GATHE
8107750	NM 1253-80-B	3004524146	103		EAST #7E	BLANCO	50.0	SOUTHERN UNION GATHE
8107752	NM-1313-80-A	3004524020	103		THOMPSON #5H	BASIN	85.0	SOUTHERN UNION GATHE
8107753	NM-1313-80-B	3004524020	103		THOMPSON #5H	BLANCO	125.0	SOUTHERN UNION GATHE
-W H GALLAWAY					RECEIVED: 12/05/80 JA: NM 4			
8107719	NM14-78	3004520961	108		DELO #4	FULCHER KUTZ PICTURED CL	20.0	EL PASO NATURAL GAS
-WESTERN OIL PRODUCERS INC					RECEIVED: 12/05/80 JA: NM 4			
8107805	NM-1430-80	3002526180	103		WOOLWORTH RANCH UNIT #1	CINTA ROJO MORROW GAS	21.9	EL PASO NATURAL GAS
-YATES PETROLEUM CORPORATION					RECEIVED: 12/05/80 JA: NM 4			
8107751	NM-1257-80	3001522832	103		FEDERAL CX COM NO 3	EAGLE CREEK PERMO PENN	0.0	TRANSWESTERN PIPELIN
8107743	NM 1247-80	3001523327	103		IRISH HILLS-YESO NM FEDERAL #2	PENASCO DRAW SA YESO (AS	0.0	TRANSWESTERN PIPELIN
8107744	NM 1248-80	3001523328	103		IRISH HILLS-YESO NM FEDERAL #3	PENASCO DRAW SA YESO (AS	0.0	TRANSWESTERN PIPELIN
8107746	NM 1250-80	3001523335	103		MOBIL CI FEDERAL #11	UND PENASCO DRAW MORROW	0.0	TRANSWESTERN PIPELIN
-SOUTHLAND ROYALTY CO					RECEIVED: 12/05/80 JA: UT 4			
8107806	UA-1437-80	4303700000	108		GOTHIC MESA 588 #6	GOTHIC MESA	5.5	EL PASO NATURAL GAS
8107773	UA-1343-80	4303730296	103		WHITE MESA UNIT #113	WHITE MESA	30.0	EL PASO NATURAL GAS
8107774	UA-1344-80	4303730330	103		WHITE MESA UNIT #115	WHITE MESA	25.0	EL PASO NATURAL GAS
8107775	UA-1345-80	4303730331	103		WHITE MESA UNIT #116	WHITE MESA	60.0	EL PASO NATURAL GAS

OTHER PURCHASERS	VOLUME NO 1337
8107633	PHILLIPS PETROLEUM CO
8107732	NORTHWEST PIPELINE CORP

[FR Doc. 80-40502 Filed 12-30-80; 8:45 am]

BILLING CODE 6450-85-C

[Volume 338]

Determinations by Jurisdictional Agencies Under the Natural Gas Policy Act of 1978

December 22, 1980.

The above notices of determination were received from the indicated jurisdictional agencies by the Federal Energy Regulatory Commission pursuant to the Natural Gas Policy Act of 1978 and 18 CFR 274.104. Negative determinations are indicated by a "D" after the section code. Estimated annual production (PROD) is in million cubic feet (MMcf). An (*) preceding the control number indicates that other purchasers are listed at the end of the notice.

The applications for determination in these proceedings together with a copy or description of other materials in the record on which such determinations were made are available for inspection, except to the extent such material is treated as confidential under 18 CFR 275.206, at the Commission's Division of Public Information, Room 1000, 825 North Capitol Street, N.E., Washington, D.C. 20426.

Persons objecting to any of these determinations may, in accordance with 18 CFR 275.203 and 18 CFR 275.204, file a protest with the Commission within on or before January 15, 1981.

Please reference the FERC Control Number (JD No) in all correspondence related to these determinations.

Kenneth F. Plumb,

Secretary.

BILLING CODE 6450-85-M

```
JD NO    JA DKT        API NO      SEC D WELL NAME                          FIELD NAME                PROD     PURCHASER
-----    ------        ------      --- - ---------                          ----------                ----     ---------
*****************************************************************************
  OKLAHOMA CORPORATION COMMISSION
*****************************************************************************
=ADAMS PETROLEUM ENTERPRISES CORP      RECEIVED:  12/03/80  JA: OK
 8107826   06356        3506300000 103   RENEGADE #1-RG                     NE HORNS CORNER           279.9 TRANSOK PIPE LINE CO
=AMAREX INC                            RECEIVED:  12/05/80  JA: OK
 8107844   09323        3512920472 107   CLIFT #1-2                         S W CHEYENNE              700.0 EL PASO NATURAL GAS
=AMERADA HESS CORPORATION              RECEIVED:  12/05/80  JA: OK

 8107833   06162        3515100000 108   W H FARRIS UNIT #1                 OAKDALE NW                  1.4 MICHIGAN WISCONSIN P
=AMOCO PRODUCTION CO                   RECEIVED:  12/03/80  JA: OK
 8107811   06271        3513921138 108   HUNGERFORD GAS UNIT #2             GUYMON-HUGOTO              17.0 PHILLIPS PETROLEUM C
=APACHE CORPORATION                    RECEIVED:  12/03/80  JA: OK
 8107822   09237        3500920335 107   HOLLETT #1-4                       ATOKA                     912.5
=BROOKS HALL OIL CORP                  RECEIVED:  12/03/80  JA: OK
 8107827   06355        3507920339 103   CRAIN #1                           CEDARS                    180.0 ARKANSAS-LOUISIANA G
=CLEMENTS EXPLORATION CO               RECEIVED:  12/03/80  JA: OK
 8107813   06194        3510320818 103   FRANK BRISCOE NO 1                                           160.0 AMINOIL USA INC
 8107812   06195        3510320817 103   SEWELL NO 1                        FOURDEE EAST              200.0 AMINOIL USA INC
=CLEMENTS EXPLORATION CO               RECEIVED:  12/05/80  JA: OK
 8107845   06192        3510320770 103   STATE OF OKLAHOMA NO 1-36                                    300.0 AMINOIL USA INC
=CONOCO INC                            RECEIVED:  12/03/80  JA: OK
 8107807   06366        3501100000 108   BESSIE SNYDER UNIT NO 1            SW CANTON                   1.8 OKLAHOMA GAS & ELECT
=DALCO PETROLEUM INC                   RECEIVED:  12/05/80  JA: OK
 8107835   05867        3507322402 103   BOWMAN #1                          SOONER TREND               91.3 CITIES SERVICE GAS C
 8107839   06041        3507322372 103   BRUEGGEN #1                        SOONER TREND               91.3 DALCO PETROLEUM US L
 8107832   06047        3507322160 103   HUMPHREY NO 2                      SOONER TREND                0.0 DALCO PETROLEUM US L
 8107836   05868        3507322294 103   THRONE #1                          SOONER TREND               91.3 DALCO PETROLEUM US L
=DAVIS OIL COMPANY                     RECEIVED:  12/05/80  JA: OK
 8107834   06159        3501721443 103   J L NO 1                           NORTH FORK                450.0 PHILLIPS PETROLEUM C
=F HOWARD WALSH JR                     RECEIVED:  12/03/80  JA: OK
 8107823   06815        3505129600 102   BOSWELL #1                         SE CHICKASHA              540.0 ARKANSAS LOUISIANA G
 8107824   06814        3505120936 102   GREGORY #1                         SE CHICKASHA              730.0 ARKANSAS LOUISIANA G
=FALCON PETROLEUM COMPANY              RECEIVED:  12/03/80  JA: OK
 8107829   06352        3500721678 103   PATTERSON NO 1                     N W DOMBEY                110.0 PANHANDLE EASTERN PI
=FALCON PETROLEUM COMPANY              RECEIVED:  12/05/80  JA: OK
 8107846   06351        3515321015 103   BRUNER NO 1-16                     NE SEILING                365.0 PANHANDLE EASTERN PI
=FARMERS INVESTMENTS INC               RECEIVED:  12/03/80  JA: OK
 8107828   06353        3511900000 103   LASATER #1                         NE RUSSELL SW-SW-NE SEC     0.0 EASON OIL CO
=GEODYNE RESOURCES INC                 RECEIVED:  12/03/80  JA: OK
 8107809   06256        3504722086 103   FELBER 7-1                         SOONER TREND               75.0 UNION TEXAS PETROLEU
=GULF OIL CORPORATION                  RECEIVED:  12/05/80  JA: OK
 8107837   05575        3509321618 103   CALLAWAY STATE #2-16               NE CEDARDALE                3.5 MICHIGAN WISCONSIN P
=JET OIL COMPANY                       RECEIVED:  12/03/80  JA: OK
```

VOLUME 33A PAGE 002

JD NO	JA DKT	API NO	SEC	D	WELL NAME	FIELD NAME	PROD	PURCHASER
8107830	06324	3507322387	103		BECKNER #1	SOONER TREND	12,0	CITIES SERVICE GAS C
8107819	06322	3504722079	103		COOPER #1	NORTH ELKHORN	0,0	EASON OIL CO
8107818	06323	3504721854	103		MEYER #1	N ELKHORN	14,0	AMINOIL USA INC
-KAISER-FRANCIS OIL COMPANY					RECEIVED: 12/05/80 JA: OK			
8107851	06331	3513900000	108		C M REYNOLDS #1	HUGOTON FIELD	20,0	CITIES SERVICE GAS C
-KENNEDY & MITCHELL INC					RECEIVED: 12/05/80 JA: OK			
8107841	05527	3500700000	103		CLENNEY #24-393	UNALLOCATED (SW SW 6-1N-	275,0	NORTHERN NATURAL GAS
8107842	05528	3515100000	103		MYERS #20-312	AVARD NW (SE NE 20-26N-1	180,0	PANHANDLE EASTERN PI
8107840	05526	3504500000	103		SALON #24-401	UNALLOCATED (SW NE 9-23N	275,0	NORTHERN NATURAL GAS
-L G WILLIAMS OIL COMPANY INC					RECEIVED: 12/03/80 JA: OK			
8107821	06309	3501721277	103		INDEPENDENCE 28-1	YUKON	0,0	PHILLIPS PETROLEUM C
8107820	06310	3501721195	103		PARK CENTER 29-1	YUKON	0,0	PHILLIPS PETROLEUM C
-LENHART & BENNETT INC					RECEIVED: 12/05/80 JA: OK			
8107852	05170	3507121079	103		MOLACEK NO 11-1	EAST DILWORTH	25,0	CITIES SERVICE CO
8107853	05171	3507121102	103		MOLACEK NO 11-2	EAST DILWORTH	25,0	CITIES SERVICE
-NATURAL GAS ANADARKO INC					RECEIVED: 12/05/80 JA: OK			
8107856	06328	3500721683	103		SPRAGUE #1-22	SOUTH SIX MILE	180,0	NORTHERN NATURAL GAS
8107857	06775	3500721761	102		STAKER #1-26	LORENA	270,0	NORTHERN NATURAL GAS
-NIXON-DAVIS ENERGY CO INC					RECEIVED: 12/04/80 JA: OK			
8107831	05449	3508321226	103		FERGUSON #1	WEST MULHALL	120,0	EASON OIL CO
-PETROLEUM INC					RECEIVED: 12/05/80 JA: OK			
8107855	06327	3508720770	103		NICHOLS B #1	N DIBBLE	3000,0	SUN GAS CO
-PORTS OF CALL CO					RECEIVED: 12/05/80 JA: OK			
8107843	06803	3501721580	102		SHEPHERD #2-1	NW YUKON	0,0	DELHI GAS PIPELINE C
-PROVIDENCE ENERGY CORP					RECEIVED: 12/05/80 JA: OK			
8107854	06326	3505920863	103		KRAUS #1	N W DOBY SPRINGS	100,0	NORTHERN NATURAL GAS
-RED EAGLE OIL CO					RECEIVED: 12/03/80 JA: OK			
8107808	06292	3509321781	103		BENJAMIN NO 1	FAIRVIEW	75,0	PIONEER GAS PRODUCTS
-SAMSON RESOURCES COMPANY					RECEIVED: 12/05/80 JA: OK			
8107847	06193	3503920253	103		MUELLER UNIT NO 1	ANTHON	730,0	ARKANSAS LOUISIANA G
-SHAR-ALAN OIL CO					RECEIVED: 12/03/80 JA: OK			
8107815	06295	3509321762	103		OLGA MARTENS A-1	W FAIRVIEW	250,0	DELHI GAS PIPELINE C
-SOUTHLAND ROYALTY CO					RECEIVED: 12/03/80 JA: OK			
8107816	06294	3513921046	108		LEHMBECK #1-30	BAKERSBURG	0,5	KANSAS NEBRASKA NATU
8107817	06296	3513900000	108		WALL #1-4	CAPLE	11,0	NORTHERN NATURAL GAS
-SOUTHWESTERN EXPLOR CONSULTANTS INC					RECEIVED: 12/03/80 JA: OK			
8107810	06301	3510320923	103		EDWARDS #2	POLO	0,0	ARCO OIL & GAS CO
-SOUTHWESTERN EXPLOR CONSULTANTS INC					RECEIVED: 12/05/80 JA: OK			
8107848	06302	3510320935	103		ISABEL #1	POLO	0,0	ARCO OIL & GAS CO
-WESTERN CONTINENT OIL CORP					RECEIVED: 12/05/80 JA: OK			
8107850	05929	3507121425	103		BRAZELTON 3-36	PERMIAN	35,0	CORONADO TRANSMISSIO
8107849	05922	3507121223	102		JOHNSON 1-30	PERMIAN	35,0	CORONADO TRANSMISSIO
-WM J OCONNOR					RECEIVED: 12/03/80 JA: OK			
8107814	06350	3500320728	103		GLADYS NO 2	OAKDALE	180,0	MICHIGAN-WISCONSIN P
-WM J OCONNOR					RECEIVED: 12/05/80 JA: OK			
8107838	06188	3515121021	103		BROWN #1	ALINE	185,0	MICHIGAN-WISCONSIN P
-WOODS PETROLEUM CORPORATION					RECEIVED: 12/03/80 JA: OK			
8107825	06469	3512920421	102		SUMMERS #13-1	NORTH STRONG CITY	730,0	ARKANSAS LOUISIANA G

****
** U.S. GEOLOGICAL SURVEY - METAIRIE,LA
****

-AMOCO PRODUCTION CO RECEIVED: 12/08/80 JA: 3

VOLUME 338 PAGE 003

JD NO	JA DKT	API NO	SEC	D WELL NAME	FIELD NAME	PROD	PURCHASER
8107865	GO-1675	4271140462	102	OCS-G-2427 #A-4	E ADD HIGH IS AREA-S EXT	1500.0	MICHIGAN-WISCONSIN P
8107864	GO-1676	4271140468	102	OCS-G-2427 #A-5	HIGH ISLAND AREA-SOUTH E	1500.0	MICHIGAN-WISCONSIN P
-CNG PRODUCING COMPANY				RECEIVED: 12/08/80 JA: 3			
8107859	GO-1589	1771240198	102	F-381	SHIP SHOAL	1460.0	CONSOLIDATED GAS SUP
-EXXON CORPORATION				RECEIVED: 12/08/80 JA: 3			
8107861	GO-1598	1771540329	102	OCS-G 1250 NO C-9	S TIMBALIER	1095.0	TRUNKLINE GAS CO
-GULF OIL CORPORATION				RECEIVED: 12/08/80 JA: 3			
8107875	GO-1672	1771540332	102	OCS G-3336 WELL NO D-12	SOUTH TIMBALIER	100.0	TEXAS EASTERN TRANSM
-MCMORAN OFFSHORE EXPLORATION CO				RECEIVED: 12/08/80 JA: 3			
*8107873	GO-1698	1770540363	102	OCS-G 3390 #9	VERMILION	9000.0	TRANSCONTINENTAL GAS
-MOBIL OIL EXPLORATION & PROD S E				RECEIVED: 12/08/80 JA: 3			
8107860	GO-1669	1771740110	102	GRAND ISLE 83 #2	GRAND ISLE	2737.0	NORTHERN NATURAL GAS
*8107858	GO-1633	1771340072	102	SOUTH PELTO #10 #10C	SOUTH PELTO	2500.0	TRANSCONTINENTAL GAS
*8107876	GO-1632	1771340072	102	SOUTH PELTO 10 #10A	SOUTH PELTO	7.0	TRANSCONTINENTAL GAS
8107863	O-1601	1771340039	102	SOUTH PELTO 9 #4A	SOUTH PELTO	88.0	TRANSCONTINENTAL GAS
-PENNZOIL OIL & GAS INC				RECEIVED: 12/08/80 JA: 3			
8107870	GO-1691	4270940304	102	OCS-G 2372 #B-15	HIGH ISLAND AREA	157.0	UNITED GAS PIPE LINE
-SHELL OIL CO				RECEIVED: 12/08/80 JA: 3			
*8107866	GO-1686	1770540402	102	OCS-G 3119 NO 1	VERMILION	750.0	FLORIDA GAS EXPLORAT
*8107874	GO-1619	4270840080	102	OCS-G 3236 A-18	HIGH ISLAND	288.2	UNITED GAS PIPELINE
8107864	GO-1678	4270340060	102	OCS-G 3467 A-1	MATAGORDA ISLAND	10.0	TRANSCONTINENTAL GAS
8107881	GO-1679	4270340063	102	OCS-G 3467 A-2	MATAGORDA ISLAND	0.0	TRANSCONTINENTAL GAS
8107877	GO-1680	4270340064	102	OCS-G 3467 A-3	MATAGORDA ISLAND	1.0	TRANSCONTINENTAL GAS
8107882	GO-1681	4270340065	102	OCS-G 3467 A-4	MATAGORDA ISLAND	0.3	TRANSCONTINENTAL GAS
8107860	GO-1682	4270340068	102	OCS-G 3467 A-5	MATAGORDA ISLAND	1.3	TRANSCONTINENTAL GAS
8107862	GO-1683	4270340071	102	OCS-G 3467 A-6	MATAGORDA ISLAND	10.0	TRANSCONTINENTAL GAS
-TENNECO OIL COMPANY				RECEIVED: 12/08/80 JA: 3			
8107878	O-1384	1770440376	102	EAST CAMERON 380 C-1	EAST CAMERON	3600.0	TENNESSEE GAS PIPELI
8107867	O-1473	1770040293	102	WEST CAMERON 180 G-7	WEST CAMERON 180	1.5	TENNESSEE GAS PIPELI
-TRANSCO EXPLORATION COMPANY				RECEIVED: 12/08/80 JA: 3			
8107879	O-1627	4270940422	102	OCS-G 3243 A-11	HIGH ISLAND	2900.0	TRANSCONTINENTAL GAS
*8107869	GO-1654	1771940154	102	OCS-G 3414 #4	WEST DELTA	8.0	TRANSCONTINENTAL GAS
*8107872	GO-1655	1771940163	102	OCS-G 3414 #6	WEST DELTA	8.0	TRANSCONTINENTAL GAS
8107871	GO-1656	1771940167	102	OCS-G 3414 #7	WEST DELTA	8.0	TRANSCONTINENTAL GAS
-SHELL OIL CO				RECEIVED: 12/08/80 JA: LA 3			
8107868	GO-1684	1772340096	102	OCS-G 1609 NO D-43	SOUTH PASS	11.7	SOUTHERN NATURAL GAS
-TEXACO INC				RECEIVED: 12/08/80 JA: LA 3			
*8107883	GO-1661	1771040748	102	E BLOCK 313 OCS G-2608 B-15	EUGENE ISLAND	365.0	COLUMBIA GAS TRANSMI

OTHER PURCHASERS VOLUME NO 1338

8107858	FLORIDA GAS CO
8107866	TRANSCONTINENTAL GAS PIPELINE CORP
8107869	PUBLIC SERVICE ELECTRIC AND GAS CO
8107872	PUBLIC SERVICE AND GAS CO
8107873	TRANSCONTINENTAL GAS PIPELINE CO
8107874	TRANSCONTINENTAL GAS PIPELINE CORP
8107876	FLORIDA GAS TRANSMISSION CO
8107883	TEXAS EASTERN TRANSMISSION CORP

[FR Doc. 80-40583 Filed 12-30-80; 8:45 am]
BILLING CODE 6450-85-C

ENVIRONMENTAL PROTECTION AGENCY

[ER-FRL-1718-3]

Availability of Environmental Impact Statements

AGENCY: Office of Environmental Review (A-104), U.S. Environmental Protection Agency.

PURPOSE: This notice lists the environmental impact statements (EISS) which have been officially filed with the EPA and distributed to Federal agencies and interested groups, organizations and individuals for review pursuant to the Council on Environmental Quality's regulations (40 CFR Part 1506.9).

PERIOD COVERED: This notice includes EIS's filed during the week of December 22, 1980 to December 24, 1980.

REVIEW PERIODS: The 45-day review period for draft EIS's listed in this notice is calculated from December 31, 1980 and will end on February 16, 1981. The 30-day review period for final EIS's as calculated from December 31, 1980 will end on January 30, 1981.

EIS AVAILABILITY: To obtain a copy of an EIS listed in this notice you should contact the Federal agency which prepared the EIS. This notice will give a contact person for each Federal agency which has filed an EIS during the period covered by the notice. If a Federal agency does not have the EIS available upon request you may contact the Office of Environmental Review, EPA, for further information.

BACK COPIES OF EIS'S: Copies of EIS's previously filed with EPA or CEQ which are no longer available from the originating agency are available with charge from the following source: Information Resources Press, 1700 North Moore Street, Arlington, Virginia 22209, (703) 558-8270.

SUMMARY OF NOTICE: This notice sets forth a list of EIS's filed with EPA during the week of December 22, 1980 to December 26, 1980. The Federal agency filing the EIS, the name, address, and telephone number of the Federal agency contact for copies of the EIS, the filing status of the EIS, the actual date the EIS was filed with EPA, the title of the EIS, the state(s) and county(ies) of the proposed action and a brief summary of the proposed Federal action and the Federal agency EIS number, if available, is listed in this notice. Commenting entities on draft EIS's are listed for final EIS's. All additional information relating to EIS's such as time extensions or reductions of prescribed review periods, withdrawals, retractions, corrections or supplemental repotrs is also noticed under the appropriate agency.

FOR FURTHER INFORMATION CONTACT: Kathi L. Wilson, Office of Environmental Review, Environmental Protection Agency, 401 M Street, SW., Washington, D.C.20460, (202) 245-3006.

Dated: December 29, 1980.

William N. Hedeman, Jr.,

Director, Office of Environmental Review (A-104).

U.S. Army Corps of Engineers

Contact: Mr. Richard Makinen, Office of the Chief of Engineers, Attn.: DAEN-CWR-P, Office of the Chief of Engineers, U.S. Army Corps of Engineers, 20 Massachusetts Avenue, Washington, D.C. 20314, (202) 272-0121.

Final

Irondequoit Bay navigation improvements, Monroe County, N.Y., December 2: Proposed are recreational navigation improvements for Irondequoit Bay in Monroe County, New York. The preferred alternatives consider opening the bay at the existing outlet with a fixed, four-lane highway bridge or dredging a deeper channel at the same location with a lift bridge providing unlimited vertical clearance. The dredged material disposal options preferred are wetland creation and open-water dumping in the deepest waters of Irondequoit Bay. (Buffalo District.) Comments made by: USDA, DOI, EPA, DOC, DOT. (EIS Order No. 800980.)

DEPARTMENT OF COMMERCE

Contact: Dr. Robert T. Miki, Acting Deputy Assistant Secretary, for Regulatory Policy, Room 7614, Department of Commerce, Washington, D.C. 20230, (202) 377-2482.

National Oceanic and Atmospheric Administration

Draft Supplement

Groundfish Fishery FMT, WA/OR/CA, (DS-1), Pacific, December 24: This statement supplements draft EIS, #791172, filed 11-23-79. Proposed is a fishery management plan for the groundfish fishery of the Pacific Ocean offshore of Washington, Oregon and California. This supplement examines several major revisions and improvements and considers groundfish resources, fisheries, harvest levels and detailed management options. (EIS Order No. 800987.)

Department of Defense, Air Force

Contact: L/C William Verkest, AFRCE-MX/DEV, Ballistic Missile Office, Box EIS, Norton Air Force Base, California 92409, (714) 382-4891.

Draft

MX Missile, Deployment Area Selection, Several, December 2: Proposed is the selection of sites for the deployment of the MX missile. Possible sites under consideration include (1) Coyote Spring Valley or Ely, Nevada; (2) Milford, Beryl or Delta, Utah; (3) Dalhart, Texas; and (4) Clovis, New Mexico. The system is expected to be dispersed over approximately 8,500 sq. miles. Approximately 8,500 miles of new road are planned requiring 80,000 acres for right-of-way. (EIS Order No. 800986.)

Extension: The review period for the above EIS has been extended to April 1, 1981. (No. 800986.)

ENVIRONMENTAL PROTECTION AGENCY

Contact: RTP Library, Environmental Protection Agency, Research Triangle Park, North Carolina 27711, (919) 541-2777.

Draft

Bulk Gasoline Terminals, Standards, Regulatory, December 22: Proposed are performance standards to limit emissions of volatile organic compounds (VOC) from new, modified, and reconstructed bulk gasoline terminals, four regulatory alternatives consider outlet levels of VOC, levels of State involvement and various industry restrictions and requirements. (EPA-450/3-80-038A.) (EIS Order No. 800982.)

Final

Contact: Mr. Eugene Wojcik, Region 5, Environmental Protection Agency, 230 South Dearborn Street, Chicago, Illinois 60604, (312) 353-2157.

Springvale-Bear Creek, Case Study 3, Emmet County, Mich., December 22: Proposed is the awarding of a grant for a 201 facility plan for the Crooked/Pickerel Lakes facility planning area located in Emmet County, Michigan. The preferred alternative is a limited action alternative and includes: (1) The upgrading of most on-site systems by replacing undersized septic tanks, and upgrading existing drainfields or replacing them with elevated sand mounds, (2) service of the Ellsworth Point and Botsford Landing areas by cluster systems, and (3) service of the Crooked/Pickerel channel area by holding tanks. Five other alternatives are considered. This is a case study 3 for alternative waste treatment systems for rural lake projects. Comments made by: HEW, USDA, DOT, DOI. (EIS Order No. 800981.)

DEPARTMENT OF HOUSING AND URBAN DEVELOPMENT

Contact: Mr. Richard H. Broun, Director, Office of Environmental Quality, Room 7274, Department of Housing and Urban Development, 451 7th Street, S.W., Washington, D.C. 20410, (202) 755-6300.

Draft

Saddlebrook Farms, Mortgage Insurance, Gloucester, County, N.J., December 2: Proposed is the issuance of HUD mortgage insurance for the Saddlebrook Farms Subdivision in Washington Township, Gloucester County, New Jersey. The development would consist of approximately 751 single family dwelling units on 417 acres. (EIS Order No. 800977.)

DEPARTMENT OF INTERIOR

Contact: Mr. Bruce Blanchard, Director, Environmental Project Review, Room 4256, Interior Bldg., Department of Interior, Washington, D.C. 20240, (202) 343-3891.

Final

OCS Oil and Gas Sales, No. A66 and No. 66, Gulf of Mexico, December 24: Proposed are two OCS oil and gas lease sales for tracts A66 and 66 in the Gulf of Mexico. The tracts comprise 1,979,794 acres offshore of the states of Texas, Louisiana, Alabama, Mississippi and Florida. The project will include the construction of 175 development wells, 185 exploration wells, 375 miles of offshore pipeline and 30 new platforms. The alternatives consider: (1) hold sale as proposed, (2) modify via potential tract deletions, (3) delay sales, and (4) withdraw sales. (FES-80-54.) Comments made by: AHP, DOC, DOI, DOT, EPA, FERC, USAF, USA, state agencies, groups, individuals, and businesses. (EIS Order No. 800988.)

DEPARTMENT OF TRANSPORTATION

Contact: Mr. Martin Convisser, Director, Office of Environment and Safety, U.S. Department of Transportation, 400 7th Street, SW., Washington, D.C. 20590, (202) 426-4357.

Federal Aviation Administration

Final

Boston-Logan Airport, Bird Islands Flats, Suffolk County, Mass., December 22: Proposed is Development of the Bird Island Flats located at the southwest corner of Boston-Logan International Airport in Suffolk County, Massachusetts. The flats encompass approximately 65 acres of a 234 acre landfill. Each alternative includes cargo facilities, freight forwarders and a noise buffer zone. The development alternatives consider: (1) Low intensity cargo, (2) high intensity cargo, (3) mixed use, and (4) no action. Each of the development alternatives are examined with and without general aviation land use. Comments made by: HHS, DOT, COE, HUD, EPA, DOI, DOE. (EIS Order No. 800979.)

Federal Highway Administration

Draft

Romence Road Extension, Portage, Kalamazoo County, Mich., December 22: Proposed is the extension of Romence Road from South Westnedge Avenue to Portage Road in the city of Portage, Kalamazoo County, Michigan. The extension will include additional lanes, right-of-way and construction of an access road. The alternatives considered are: (1) Various alignments, (2) non action, and (3) other transportation modes. (FHWA-MI-EIS-80-03-D.) (EIS Order No. 800978.)

TX-71 Upgrading, City of La Grange, Fayette County, Tex., December 22: Proposed is the upgrading of TX-71 within the city of La Grange, Fayette County, Texas, The improvements would involve reconstructing TX-71 as a four lance divided facility with partial access. The length of TX-71 involved is approximately 10.1 miles. (FHWA-TX-EIS-80-03-D.) (EIS Order No. 800983.)

Bluefield Bypass, VA-19/460 to VA-720, Tazewell County, Va, December 22: Proposed is the construction of the Bluefield Bypass from the intersection of existing VA-19/460 west of Bluefield in Tazewell County, Virginia. The bypass would provide a complete four lane facility to the West Virginia State line extending for an approximate length of 3.6 miles. The facility would have interchanges with full access in all directions. (FHWA-VA-EIS-80-01-D.) (EIS Order No. 800984.)

Final Supplement

HI-3, North Halawa Valley alignment (FS-1), Honolulu, County, Hawaii, December 23: This statement supplements final EIS, No. 730808, filed 5-21-73. Proposed is the realignment of HI-3 through the North Halawa Valley in Honolulu County, Hawaii. The facility would be either a six lane or four lane highway. This supplement specifically addresses the four lane segment of HI-3 which would skirt the perimeter of Ho'omaluhia Park in Kaneohe. (FHWA-HI-EIS-77-01-F(S).) (EIS Order No. 800985.)

[FR Doc. 80-40704 Filed 12-30-80; 8:45 am]

BILLING CODE 6560-37-M

[SWH-FRL 1717-2]

Hazardous Waste Management System: Identification and Listing of Hazardous Waste

AGENCY: U.S. Environmental Protection Agency.

ACTION: Grant of temporary exclusions and request for comment.

SUMMARY: The Environmental Protection Agency (EPA) is today temporarily excluding solid wastes generated at several particular generating facilities from hazardous waste status. This action responds to delisting petitions submitted under 40 CFR 260.20 and 260.22 and are granted pursuant to 40 CFR 260.22(m). The effect of this action is to temporarily exclude certain wastes generated at particular facilities from listing as hazardous wastes under 40 CFR Part 261, and from the management standards issued by EPA under Sections 3002 through 3006 of the Resource Conservation and Recovery Act of 1976, as amended (RCRA) (40 Parts 262 through 265 and 122 through 124 of this Chapter).

DATES: Effective date: December 24, 1980.

EPA will accept public comments on these temporary exclusions until March 2, 1981. Any person may request a hearing on these temporary exclusions by filing a request with John P. Lehman, whose address appears below, by January 21, 1981. The request must contain the information prescribed in § 260.20(d) of this chapter.

ADDRESSES: Comments should be sent to the Docket Clerk, Office of Solid Waste (WH-565), U.S. Environmental Protection Agency, 401 M Street, S.W., Washington, D.C. 20460. Communications should identify the regulatory docket number "Section 3001/Delisting Petitions."

Requests for hearing should be addressed to John P. Lehman, Director, Hazardous and Industrial Waste Division, Office of Solid Waste (WH-565), U.S. Environmental Protection Agency, Washington, D.C. 20460.

The public docket for these temporary exclusions is located in Room 2711, U.S. Environmental Protection Agency, 401 M St., S.W., Washington, D.C. 20460, and is available for viewing from 9 a.m. to 4 p.m., Monday through Friday, excluding holidays.

FOR FURTHER INFORMATION CONTACT: Myles Morse, Office of Solid Waste (WH-565), U.S. Environmental Protection Agency, 401 M St., S.W., Washington, D.C. (202) 755-9187.

SUPPLEMENTARY INFORMATION: On July 16, 1980 and November 12, 1980 as part of its final and interim final regulations implementing Section 3001 of RCRA, EPA published lists of hazardous wastes from non-specific and from specific sources. See 40 CFR 261.31 and 261.32 (45 FR 47832-47836 and 74890-74892). These wastes were listed as hazardous because they typically and frequently exhibit either any of the characteristics of hazardous wastes identified in Subpart C of Part 261 (ignitability, corrosivity, reactivity and EP toxicity) or meet the criteria for listing contained in § 261.11(a)(2) or § 261.11(a)(3).

The Agency, however, recognizes that individual waste streams may vary depending on raw materials, industrial processes and other factors. Thus, while a type of waste described in these regulations generally is hazardous, a specific waste meeting the listing description from an individual facility may not be hazardous. For this reason, §§ 260.20 and 260.22 provide an exclusion procedure, allowing persons to demonstrate that a specific waste from a particular generating facility should not be regulated as a hazardous waste. To be excluded, petitioners must show that the waste produced at their facilities does not meet any of the criteria under which the waste was listed. (See § 260.22(a).) Wastes which are "delisted" (i.e., excluded) may, however, still be hazardous if they exhibit any of the characteristics of a hazardous waste and generators remain obligated to make this determination.

In addition to wastes listed as hazardous in §§ 261.31 and 261.32, residues from the treatment, storage, or disposal of listed hazardous wastes also are eligible for exclusion and remain hazardous wastes until excluded. (See §§ 261.31(c) and (d)(2).) Again, the substantive standard for "delisting" is that the waste not meet any of the criteria for which the waste was listed

originally. Where the waste is derived from one or more listed hazardous wastes, the demonstration may be made with respect to each constituent listed waste, or the waste mixture as a whole. (See § 260.22(b).) Like other excluded wastes, excluded hazardous waste treatment, storage or disposal residues remain subject to Subpart C of Part 261, and so may be hazardous if they exhibit any of the characteristics of hazardous waste.

EPA recognizes as well that there will be circumstances where immediate action on petitions is appropriate. Therefore, upon Agency review of a submitted petition, the Administrator may under § 260.22(m) grant a temporary exclusion if there is substantial likelihood that an exclusion will finally be granted.

It should be noted that the Agency has not run spot checks on the test data submitted to date in exclusion petitions. The Agency believes that the sworn affidavits submitted with each petition sufficiently binds the petitioners to ensure presentation of truthful and accurate test results. The Agency may, however, spot sample and analyze wastes or groundwater before a final decision is made whether to exclude any particular waste from the hazardous waste regulations.

We also note that the temporary exclusions granted today apply only to the Federal hazardous waste management system established under the RCRA. States remain free to take any action they deem appropriate with regard to these wastes.

The temporary exclusions published today involve the following petitioners: Virginia Chemicals Inc. for its facilities in Bucks, Alabama and Leeds, South Carolina; Bekaert Steel Wire Corporation, Rome, Georgia; the Florida Wire and Cable Company, Jacksonville, Florida; Wiremill Incorporated, Sanderson, Florida; the Firestone Steel Products Company, Spartanburg, South Carolina; the American Recovery Company, Baltimore, Maryland; Armco Incorporated, Middletown, Ohio; the Reynolds Aluminum Company for its facilities in Richmond, Virginia; Ewa Beach, Hawaii; Houston, Texas; Kansas City, Missouri; Guayama, Puerto Rico; Woodbridge, New Jersey; Salisbury, North Carolina; Hayward, California; Kent, Washington; Tampa, Florida; Torrance, California; and Middletown, New York; and Monroe Auto Equipment, Paragould, Arkansas.

I. Virginia Chemicals Inc.

A. Petition for Exclusion

Virginia Chemicals Inc. (Virginia Chemicals), involved in the production of sodium hydrosulfate, has petitioned the Agency to exclude its distillation column bottom sludge presently listed as EPA Hazardous Waste No. F003, (The following spent non-halogenated solvents: Xylene, acetone, ethyl acetate, ethylbenzene, ethyl ether, methyl isobutyl ketone, n-butyl alcohol, cyclohexanone, and methanol; and the still bottoms from the recovery of these solvents), at their facilities in Bucks, Alabama and Leeds, South Carolina. Virginia Chemicals has petitioned to exclude its residue because they claim that its still bottoms no longer meet the criteria for which the waste was listed in (40 CFR 261.11(a)(1)).

Virginia Chemicals utilizes the sodium formate process in the production of sodium hydrosulfate. The reaction is run in a methanol solution which is not part of the reaction. The methanol is then recovered from the water of reaction and recycled to the process. The distillation still bottoms discharged from the methanol recovery process are comprised primarily of sodium and sulfur salts and are sold as a co-product of the sodium hydrosulfate process.

Virginia Chemicals has submitted descriptions of its sodium hydrosulfate production and methanol recovery processes, constituent analyses of the distillation bottom material for methanol, and flash point tests for this material. Virginia Chemicals claims that since its methanol recovery is 99.9+% efficient, less than 0.1% methanol remains in the distillation still bottoms and therefore, this residue cannot be considered hazardous. Virginia Chemicals further states that its residue does not exhibit the characteristic of ignitability (§ 261.21) for which EPA Hazardous Waste F003 is listed in Part 261 Subpart D and as described in § 261.21 of the regulations.

Results of ignitability tests for both facilities indicate that the flash point of the still bottom material is greater than 212°F.

B. Agency Analysis and Action

EPA Hazardous Waste No. F003 is listed due to the ignitability of spent nonhalogenated solvents, one of which is methanol, the solvent used in Virginia Chemical's process. Analyses submitted by Virginia Chemicals indicate that methanol is present in the distillation still bottoms in only low percentages (<0.1%) by volume. This is well below the limit of 24 percent alcohol by volume set in § 261.21(a)(i) of the regulations. Section 261.21(a)(i) of the regulations also indicates that solutions with flashpoints above 140°F are considered non-ignitable. Flashpoint tests run on Virginia Chemicals distillation still bottom discharges at both facilities indicate that the flash point is greater than 212°F.

Virginia Chemicals has sufficiently demonstrated the non-hazardous nature of its distillation still bottoms due to the efficiency of its methanol recovery system. The Agency, therefore, has granted a temporary exclusion to Virginia Chemicals' Bucks, Alabama and Leeds, South Carolina facilities, for its distillation bottom discharges from its sodium hydrosulfite process, as described in its petition, from its listing under EPA Hazardous Waste No. F003.

C. Agency Information Needs for Final Delisting

The Agency believes that Virginia Chemicals has submitted sufficient data for the final delisting of its distillation still bottoms. The Agency has granted a temporary exclusion to expedite delisting action for Virginia Chemicals. Final exclusion will be granted upon review of comments received in response to this publication.

II. Bekaert Steel Wire Corporation

A. Petition for Exclusion

The Bekaert Steel Wire Corporation (Bekaert), involved in the manufacture of steel wire, has petitioned the Agency to exclude its wastewater treatment sludge, presently listed for the following EPA Hazardous Wastes:

F006—Wastewater treatment sludges from electroplating operations except from the following processes: (1) Sulfuric acid anodizing of aluminum; (2) tin plating on carbon steel; (3) zinc plating (segregated basis) on carbon steel; (4) aluminum or zinc-aluminum plating on carbon steel; (5) cleaning/stripping associated with tin, zinc and aluminum plating on carbon steel; and (6) chemical etching and milling of aluminum.

F007—Spent cyanide plating bath solutions from electroplating operations (except for precious metals electroplating spent cyanide plating bath solutions)

F008—Plating bath sludges from the bottom of plating baths from electroplating operations where cyanides are used in the process (except for precious metals electroplating bath sludges)

F009—Spent stripping and cleaning bath solutions from electroplating operations where cyanides are used in the process (except for precious metals electroplating spent stripping and cleaning bath solutions)

K063 [1]—Sludge from lime treatment of spent pickle liquor from steel finishing operations.

The constituents of concern for these wastes are cadmium, chromium, nickel, cyanide and lead. Bekaert has petitioned to exclude its waste because it does not meet the criteria for which they were listed.

Bekaert utilizes the processes of wire drawing, hydrochloric acid pickling, and electroplating of copper and zinc in its production of steel wire. Bekaert's wastewater treatment process for pickling and plating rinse water involves caustic soda neutralization, chlorine treatment for cyanide destruction, calcium hydroxide neutralization (to a pH of 8–10), clarification/precipitation, and pressure filtration. Bekaert claims that its wastewater treatment process produces an environmentally stable sludge containing non-hazardous levels of cadmium, chromium, nickel, cyanide and lead.

Bekaert has submitted a detailed description of its sludge treatment system, EP toxicity test results for all toxic constituents specified in § 261.24 of the regulations, and total constituent analyses of the sludge for cyanide. The samples were taken over a one month period which the petitioner claims represents the uniformity of the constituent concentrations in the waste.

EP toxicity tests for cadmium, total chromium, nickel and lead produced maximum leachate concentrations of <0.02, 0.05, 0.22, and <0.2 ppm, respectively. Constituent analysis of the wastewater sludge for cyanide revealed a maximum concentration of 0.01 ppm.

B. Agency Analysis and Action

The constituents of concern for which EPA Hazardous Waste Nos. F006, F007, F008, F009 and K062 are listed are cadmium, chromium, nickel, lead and cyanide. Although each of these constituents appear in Bekaert's wastewater, it has sufficiently demonstrated that its wastewater treatment sludge is non-hazardous. Bekaert's waste treatment operation destroys the majority of cyanides in the wastewater, leaving residue concentrations not exceeding 0.01 ppm, which are considered negligible. Additionally, the concentrations of cadmium, chromium, and lead in extract samples of this sludge are well below the EP maximum toxicity levels. These low leachate levels indicate that the constituents are present essentially in an immobile form. Leachate analyses also indicate that the nickel present is substantially immobile and therefore not of regulatory concern. A final pH range of 8–10 indicates that Bekaert's waste treatment system effectively neutralizes its acid wastes. The Agency therefore has granted a temporary exclusion to Bekaert's facility in Rome, Georgia for its treated electroplating and pickle liquor rinse waters, as described in its petition.

III. Florida Wire and Cable Company

A. Petition for Exclusion

The Florida Wire & Cable Company (FWC), involved in the manufacture of galvanized high carbon steel wire and guy wire, has petitioned the Agency to exclude its sludge, formerly listed as EPA Hazardous Waste No. K063, sludge from lime treatment of spent pickle liquor from steel finishing operations.[2] FWC has petitioned to exclude its waste because it does not meet the criteria for which it was listed.

FWC's operation includes the processes of cold drawing, hydrochloric acid pickling, and hot dip galvanizing, and stranding in the production of galvanized high carbon steel wire and guy wire. Its waste treatment process for pickle liquor rinse and overflow wastes involves neutralization, lime and polymer flocculation, settling, and pressure filtration. FWC claims that its sludge is environmentally stable and non-hazardous, and specifically that the sludge does not contain hazardous levels of chromium and lead, the constituents of concern for spent pickle liquor (waste K062).

FWC submitted a detailed description of its sludge treatment system, and EP toxicity test results for all toxic constituents specified in § 261.24 of the regulations. The samples were taken over a one month period which the petitioner claims represents the uniformity of constituent concentrations in the waste. EP toxicity tests showed maximum chromium and lead levels in the waste extract of 0.015 and 0.058 ppm, respectively.

B. Agency Analysis and Action

The constituents of concern in this waste, are chromium and lead. EP extracts from sludge samples analyzed by FWC show chromium and lead consistently well below the maximum EP toxicity levels. These low leachate levels indicate that the constituents are present essentially in an immobile form. A final pH of 8.5 indicates that FWC's waste treatment process effectively neutralizes its acid wastes. The Agency therefore has granted a temporary exclusion to FWC's facility in Jacksonville, Florida for its treated pickle liquor rinse and overflow wastes, as described in its petition.

IV. Wiremill Incorporated

A. Petition for Exclusion

Wiremill Inc. (Wiremill), involved in the manufacture of high carbon steel wire, has petitioned the Agency to delist its sludge, formerly listed as EPA Hazardous Waste No. K063, sludge from time treatment of spent pickle liquor from steel finishing operations.[3] Wiremill has petitioned to exclude its waste because it does not meet the criteria for which it was listed.

Wiremill uses the processes of cold drawing and hydrochloric acid pickling in the production of high carbon steel wire. Its waste treatment process for pickle liquor rinse and overflow wastes involves neutralization, lime and polymer flocculation, clarification, and pressed filtration. Wiremill claims that its sludge is environmentally stable and non-hazardous, and specifically that the sludge does not contain hazardous levels of chromium and lead, the constituents of concern for spent pickle liquor (waste K062).

Wiremill has submitted a detailed description of its sludge treatment system, and EP toxicity test results for all toxic constituents specified in § 261.24 of the regulations. The samples were taken over a one-month period which the petitioner claims represents the uniformity of constituent concentrations in the waste. EP toxicity tests produced maximum leachate concentrations of <0.01 and 0.018 ppm for chromium and lead, respectively.

B. Agency Analysis and Action

The constituents of concern in this waste are chromium and lead. EP extracts from sludge samples analyzed by Wiremill show chromium and lead consistently well below the maximum EP toxicity levels. These low leachate levels indicate that the constituents are present essentially in an immobile form. A final pH of 8.7 indicates that Wiremill's waste treatment process effectively neutralizes its acid wastes. The Agency therefore, has granted a temporary exclusion to Wiremill's facility in Sanderson, Florida for its

[1] On November 12, 1980 (45 FR 74884), EPA removed waste K063 from the hazardous waste list (§ 261.32). However, since these lime treatment sludges are generated from the treatment of a listed hazardous waste (K062), they still are considered to be a hazardous waste (§ 261.3(c)(2)). Further, they remain hazardous wastes until they no longer meet any of the characteristics of hazardous wastes and are excluded (§ 261.3(d)(2)).

[2] See footnote 1.

[3] See footnote 1.

treated pickle liquor rinse and overflow wastes, as described in its petition.

V. Firestone Steel Products Company

A. Petition for Exclusion

The Firestone Steel Products Company (Firestone), involved in the manufacture of stainless steel food containers and carbon steel automotive body panels, has petitioned the Agency to exclude its sludge, formerly listed as EPA Hazardous Waste No. K063, sludge from the lime treatment of spent pickle liquor from steel finishing operations.[4] Firestone has petitioned to exclude its waste because it does not meet the criteria for which it was listed.

Firestone uses the processes of forming, welding, assembly, and metal finishing (nitric and hydrofluoric acid pickling and sulfuric acid anodizing of aluminum) in the production of food container. Its waste treatment process for spent pickle liquor and pickle liquor rinse and overflow wastes involves neutralization, lime and polymer flocculation, clarification, and pressed filtration. Firestone claims that its sludge is environmentally stable and non-hazardous and specifically that the sludge does not contain hazardous levels of chromium and lead, the constituents of concern in the spent pickle liquor (waste K062).

Firestone has submitted a detailed description of its sludge treatment system, and EP toxicity test results for all toxic constituents specified in § 261.24 of the regulations. The samples were taken over a 2 month period which the petitioner claims represents the uniformity of constituent concentrations in the waste. EP toxicity tests produced maximum leachate concentrations of 0.16 and 0.056 ppm for chromium and lead, respectively.

B. Agency Analysis and Action

A final pH range of 6 to 8.5 indicates that Firestones' waste treatment system effectively neutralizes its acid wastes. EP extracts from sludge samples analyzed by Firestone show chromium and lead concentrations consistently well below the maximum EP toxicity levels. These low leachate levels indicate that the constituents of concern are present essentially in an immobile form. The Agency therefore has granted a temporary exclusion to Firestone Steel Products Company's facility in Spartenburg, South Carolina, for its treated spent pickle liquor, as described in its petition.

[4] See footnote 1.

VI. American Recovery Company

A. Petition for Exclusion

The American Recovery Company (ARC), located in Baltimore, Maryland currently operates a waste treatment facility which neutralizes acidic electroplating and spent pickle liquor wastes. ARC has petitioned the Agency (as required by § 261.3(b)(2)) to exclude only the treatment residue produced by its treatment facility for spent pickle liquor wastes formerly listed as EPA Hazardous Waste K063, sludge from lime treatment of spent pickle liquor from steel finishing operations.[5] ARC claims that its treatment residue for the spent pickle liquor no longer meets the criteria for which the waste was originally listed, since it is non-corrosive and the hazardous constitutents of concern are present in an immobile form.

ARC has submitted a detailed description of its treatment process, and EP toxicity test results for all toxic constituents specified in § 261.24 of the regulations. ARC claims that the samples of residue obtained for analysis are representative of the range of spent pickle liquor wastes accepted for treatment at its facility.

ARC uses a batch treatment process which involves the separate neutralization of hydrofluoric, nitric and sulfuric acid pickle liquor wastes, followed by the precipitation of metals as hydroxide salts, and the belt filter press dewatering of the sludge. The pH, which is raised to a level of 8.5 is constantly monitored in the reactor tank. The supernatent is monitored for chromium and lead prior to transfer to the settling tank. Additional liming is necessary ony if supernatent samples exceed effluent guideline discharge permit parameters. The dewatered sludge is stockpiled for three to five days prior to landfilling.

Acidic wastes from electroplating processes are segregated and treated separately from spent pickle liquor wastes. The dewatered sludge from these wastes are currently manifested and disposed of at a Subtitle C landfill. ARC claims that there is no commingling of other wastes with the spent pickle liquor wastes processed at its facility.

ARC has characterized its treatment process quantitively for each of the eight companies utilizing ARC's treatment services. ARC has assured the Agency that its treatment process will be monitored using EP toxicity tests to calibrate the treatment of any additional sources of pickle liquor.

[5] See footnote 1.

Samples of dewatered sludge were obtained for EP toxicity analyses. Maximum chromium and lead levels in the waste extracts were 0.17 and <0.01 ppm, respectively.

B. Agency Analysis and Action

The constituents of concern in this waste, are chromium and lead. EP extracts from sludge samples analyzed by ARC show lead and chromium consistently well below the maximum EP toxicity levels. These low leachate levels indicate that the constituents are present essentially in an immoble form. A final pH range of 8.2 to 8.8 indicates that ARC's waste treatment system effectively neutralizes its acid wastes. The Agency therefore, has granted a temporary exclusion to ARC's facility in Baltimore, Maryland for its spent pickle liquor treatment residue, generated from the treatment process described in its petition.

VII. Armco Incorporated

A. Petition for Exclusion

Armco Incorporated (Armco), involved in the manufacture of stainless and electrical (silicon and high carbon) sheet steel has petitioned the Agency to delist its sludge, formerly listed as EPA Hazardous Waste No. K063, sludge from lime treatment of spent pickle liquor from steel finishing operations.[6] Armco has petitioned to exclude their waste because it does not meet the criteria for which it was listed.

Armco uses the process of hydrofluoric, nitric, and sulfuric acid pickling, for the cleaning of silcon, carbon and stainless steel produced at its facility. Its waste treatment process for spent pickle liquor wastes involves lime neutralization, settling, and gravity and pressed filtration. They claim their sludge is environmentally stable and non-hazardous, and specifically that the sludge does not contain hazardous levels of chromium and lead, the constitutents of concern in the spent pickle liquor (waste K062).

Armco submitted a detailed description of their sludge treatment system, and EP toxicity test results for chromium and lead. The samples were taken over a three month period which the petitioner claims represents the uniformity of constituent concentrations in the waste. EP toxicity tests revealed maximum chromium and lead levels in the waste extract of 0.17 and 0.19 ppm, respectively.

B. Agency Analysis and Action

The constituents of concern in this waste are chromium and lead. EP

[6] See footnote 1.

extracts from sludge samples analyzed by Armco show chromium and lead consistently well below the maximum EP toxicity levels. These low leachate levels indicate that the constituents are present essentially in an immobile form. A final pH of 8.5 indicates that Armco's waste treatment process effectively neutralizes its spent pickle liquor wastes. The Agency, therefore, has granted a temporary exclusion to Armco's facility in Butler, Pennsylvania for its treated spent pickle liquor, as described in its petition. It should be noted, however, that the Agency is concerned about the level of nickel in leachate analyses of the petitioner's stainless pickle liquor residues, even though nickel is not listed as a constitutent of concern. The Agency is presently analyzing its position on nickel concentration ranges in EP leachate. If after further analyses the Agency determines that these levels are of regulatory concern, nickel leachate concentrations may be considered prior to granting a final exclusion to Armco.

VIII. Reynolds Metals Company

A. Petition for Exclusion

The Reynolds Metals Company, (Reynolds), involved in the manufacture of one-piece aluminum cans, has petitioned the Agency to exclude its wastewater treatment sludge, presently listed as EPA Hazardous Waste No. F019, wastewater treatment sludges from the chemical conversion coating of aluminum. Reynolds has petitioned to exclude its waste because it does not meet the criteria for which it was listed. Reynolds has indicated that since its aluminum conversion coating processes do not use either chromium or cyanide, the constituents for which Hazardous Waste F019 is listed, its waste cannot contain hazardous levels of chromium or cyanide.

Reynolds has submitted a description of its wastewater treatement process, formulation lists from its suppliers of chemicals and mixtures used in the chemical conversion process, EP toxicity test results for all toxic constituents specified in § 261.24 of the regulations, and a constituent analysis of the sludge for cyanide.

Reynold's treatment process of chemical conversion rinse wastes involves lime neutralization to a pH of 8.0–8.5, precipitation of metal hydroxides, and dewatering via pressure filtration.

Formulation lists indicate that zirconium and fluoride compounds, nitric acid, hydrofluoric acid, hydrofluosilic acid, tannic acid, and phosphates are the major constituents of the conversion coatings used by Reynolds. None of the formulations contain chromium or cyanide.

EP toxicity test results of dewatered sludge samples indicate a maximum chromium concentration of 0.04 ppm. Constitutent analysis of the sludge revealed a cyanide concentration of 0.03 ppm.

Reynolds has certified that the production process, chemical conversion process, formulation lists, waste treatment process, EP test data and the constituent analysis for cyanide are representative and do not vary at each of the following facility sites: Richmond, Virginia; Ewa Beach, Hawaii; Houston, Texas; Kansas City, Missouri; Guayama, Puerto Rico; Woodbridge, New Jersey; Salisbury, North Carolina; Hayward, California; Kent, Washington; Tampa, Florida; Torrance, California; and Middletown, New York.

B. Agency Analysis and Action

It is apparent from the formulation lists submitted that chromium and cyanide are not used in Reynold's chemical conversion process. EP toxicity data indicate that chromium leachate concentrations are below the national primary interim drinking water standard. The cyanide concentrations found in the sludge are considered negligible and are well below the Public Health Service's suggested drinking water standard. The presence of these constituents in Reynolds wastes is probably a result of background levels and non-specific process contamination sources. Therefore, based on formulation lists, EP toxicity data, sludge constituent analysis and since Reynolds has certified that its production and treatment processes do not vary at any of its facilities, the Agency has granted temporary exclusions to the Reynolds Metals Company's facilities in Richmond, Virginia; Ewa Beach, Hawaii; Houston, Texas; Kansas City, Missouri; Guayama, Peurto Rico; Woodbridge, New Jersey; Salisbury, North Carolina; Hayward, California; Kent, Washington; Tampa, Florida; Torrance, California; and Middletown, New York, for its wastewater treatment sludge from the chemical conversion of aluminum, as described in its petition, from its listing under EPA Hazardous Waste No. F019.

IX. Monroe Auto Equipment

A. Petition for Exclusion

The Monroe Auto Equipment Company (Monroe), involved in the manufacture of automotive ride control products (shock absorbers), has petitioned the Agency to exclude its treated sludge, presently listed as EPA Hazardous Waste No. F006—wastewater treatment sludges from electroplating operations except from the following processes: (1) Sulfuric acid anodizing of aluminum; (2) tin plating on carbon steel; (3) zinc plating (segregated basis) on carbon steel; (4) aluminum or zinc-aluminum plating on carbon steel; (5) cleaning/stripping associated with tin, zinc and aluminum plating on carbon steel; and (6) chemical etching and milling of aluminum. Monroe has petitioned to exclude its waste because it does not meet the criteria for which it was listed.

The production process at Monroe's facility which generates the listed hazardous waste is hard chrome plating of carbon steel rods. The hazardous constituents of concern in this waste (F006) are cadmium, chromium, nickel and cyanides. Monroe uses only chromium (chromic acid) in its plating operation, while cadmium, nickel and cyanide compounds are not used in any of its processes. Monroe claims that its treated wastewater sludge is non-hazardous due to the immobile and non-toxic form of chromium and negligible levels of cadmium, nickel and cyanide in the sludge.

Monroe has submitted a description of its wastewater treatment process, EP toxicity test results for cadmium, chromium, and nickel, and constituent analyses of the sludge for cyanide.

Monroe's chromic acid rinse wastewater passes through a Heil chrome reduction unit which uses sulfur dioxide in sulfuric acid to reduce hexavalent chromium to the trivalent form. The reduced chromium solution then enters a Walker process clarifier along with alkaline cleaning and phosphating solutions, lime and ploymers, resulting in neutralization and precipitation of metal hydroxides. After settling, the sludge is pumped to a storage lagoon from where the sludge passes through vacuum filtration for dewatering.

EP toxicity tests involving chromium, cadmium, and nickel produced maximum leachate levels of 0.75, <0.01, and 0.05 ppm, respectively. Constituent analyses of the sludge for total cyanide produced a maximum concentration of 3.9 ppm, while free cyanide was reported as <0.001 ppm.

B. Agency Analysis and Action

The constituents for which EPA Hazardous Waste No. F006 is listed are cadmium, chromium, nickel, and cyanide. Monroe has demonstrated that its hard chromium plating process does not use cadmium, nickel, and cyanide compounds. EP extracts show cadmium

levels consistently below the interim primary drinking water standard. Nickel leachate concentrations are considered negligible as are free cyanide levels in the dewatered sludge, and are therefore not of regulatory concern. The low concentrations of cadmium, nickel, and cyanide are probably a result of unknown minor sources of contamination and background levels, rather than the direct use of these constituents in the plating process. Total chromium concentrations in the EP extract are consistently well below the maximum EP toxicity levels. These low leachate levels indicate that the constituents are present essentially in an immobile form. The Agency therefore, has granted a temporary exclusion to Monroe Auto Equipment's facility in Paragould, Arkansas, for the treated wastes generated by its hard chromium plating process as described in its petition, listed under EPA Hazardous Waste No. F006.

Dated: December 24, 1980.

Eckhardt C. Beck,

Assistant Administrator.

[FR Doc. 80-40632 Filed 12-30-80; 8:45 am]

BILLING CODE 6560-30-M

[OPP-180526; PH-FRC 1715-8]

Connecticut; Issuance of Specific Exemption for Use of Captafol on Peppers

AGENCY: Environmental Protection Agency (EPA).

ACTION: Notice.

SUMMARY: EPA granted a specific exemption to the Connecticut Department of Environmental Protection (hereafter referred to as the "Applicant") for use of captafol (Difolatan 4F) on 370 acres of peppers in Fairfield, Hartford, Litchfield, Middlesex, New London, New Haven, and Tolland Counties, Connecticut, to control pepper blight. The specific exemption was issued under the Federal Insecticide, Fungicide, and Rodenticide Act.

DATE: The specific exemption expired on October 31, 1980.

FOR FURTHER INFORMATION CONTACT: Libby Welch, Registration Division (TS-767), Office of Pesticide Programs, Environmental Protection Agency, Rm. E-124, 401 M St. SW., Washington, D.C. 20460 (202-426-0223).

SUPPLEMENTARY INFORMATION: Pepper blight is caused by a fungus that lives in the soil from year to year and may be carried on the seed. The infected plant commonly is girdled at the soil line, causing a sudden wilting and death of the plant. According to the Applicant, the pepper industry could lose an estimated $500,000 if the pepper blight was not controlled.

Zineb and copper oxychloride sulfate (COCS) are registered for this use. The Applicant stated that zineb and COCS proved generally ineffective for control of this disease in tests and commercial fields.

Difolatan 4F is currently registered for both ground and air application to a large variety of crops at rates greater than those requested for this use. Residues of captafol in or on peppers are not expected to exceed 10 parts per million (ppm) as a result of this use, with a 4-day preharvest interval. This level has been judged adequate to protect the public health. The proposed use was not expected to have an unreasonable adverse effect on birds, mammals, or aquatic organisms; nor should it have posed a hazard to endangered species and/or their habitats.

After reviewing the application and other available information, EPA determined that the criteria for an exemption had been met. Accordingly, the Applicant was granted a specific exemption to use the pesticide noted above until October 31, 1980, to the extent and in the manner set forth in the application. The specific exemption was also subject to the following conditions:

1. The product Difolatan 4F (EPA Reg. No. 239-2211), manufactured by Chevron Chemical Company, might be applied. If an unregistered label was used, it was to have contained the identical applicable precautions and restrictions which appear on the registered label.
2. Captafol was to be applied at a rate of 1.5 pounds a.i. per acre.
3. A maximum of 5 applications were to be made with a preharvest interval of 4 days.
4. A maximum of 370 acres were to be treated in the counties named above.
5. A maximum of 2,775 pounds of captafol were to be applied.
6. Applications were to be made with air or ground equipment on a 10-day schedule.
7. Spray mixture volumes of 5 gallons of water per acre were to be applied by air equipment.
8. Application was not to begin until conditions favorable for the disease became established.
9. All applicable directions, restrictions, and precautions on the EPA-registered product label were to be followed.
10. Peppers treated according to the above provisions should not have residues of captafol in excess of 10 ppm. Peppers with residues of captafol which do not exceed this level may enter interstate commerce. The Food and Drug Administration, U.S. Department of Health and Human Services, was advised of this action.
11. The EPA was to be immediately informed of any adverse effects resulting from the use of captafol in connection with this exemption.
12. The Applicant was responsible for assuring that all of the provisions of this specific exemption were met and must submit a report summarizing the result of this program by April 1, 1981.

(Sec. 18, as amended, 92 Stat. 819 (7 U.S.C. 136))

Dated: December 18, 1980.

Robert V. Brown,

Acting Deputy Assistant Administrator for Pesticide Programs.

[FR Doc. 80-40660 Filed 12-30-80; 8:45 am]

BILLING CODE 6560-32-M

[OPTS-51159A; TSH-FRC 1716-5]

Substituted Phenol, Reaction Products With Sulfur Chloride; Premanufacture Notice; Extension of Review Period

AGENCY: Environmental Protection Agency (EPA).

ACTION: Notice.

SUMMARY: EPA is extending the review period for a premanufacture notice (PMN), P80-267, under section 5(c) of the Toxic Substances Control Act (TSCA). The PMN review period for this substance commenced on September 29, 1980, and was scheduled to end on December 28, 1980. The period will not expire on February 11, 1981. The generic identity for the substance covered by the PMN is "substituted phenol, reaction products with sulfur chloride." The PMN described a chemical substance that would be manufactured for use as an additive for lubricant formulations. The submitter of the PMN claimed its identity to be confidential along with the specific chemical identity of the substance.

FOR FURTHER INFORMATION CONTACT: Cynthia Work, Chemical Control Division (TS-794), Office of Toxic Substances, Environmental Protection Agency, 401 M Street, SW., Washington, D.C. 20460, (202-426-2601).

SUPPLEMENTARY INFORMATION:

Background

Under section 5 of TSCA any person who intends to manufacture in or import into the United States a new chemical substance for commercial purposes must submit a premanufacture notice (PMN) to EPA prior to commencement of manufacture or import. In general, section 5 provides that EPA must

complete its review of a PMN within 90 days of its receipt by the Agency. However, under section 5(c) EPA may extend the notice period for good cause for additional periods, not to exceed an aggregate of 180 days from the date of receipt.

EPA issued proposed rules to implement the premanufacture notification program published in the Federal Register of January 10, 1979 [44 FR 2263]. Section 720.35 of the proposed regulations addressed the section 5(c) extension authority and provided examples of situations in which the Agency believed there would be good cause to extend the notice period. Although EPA has not yet promulgated these rules, the example in the proposal that would apply in this case is that:

EPA has received the notice and has determined that there is a significant possibility that the chemical will be regulated under section 5(e) or section 5(f) of the Act, but the Agency is unable to initiate regulatory action within the initial 90-day period (44 FR 2273).

Review to Date

EPA's initial evaluation of the subject PMN substance entailed review of information that the manufacturer supplied in the PMN, subsequent telephone conversations with EPA staff and subsequent submissions to EPA. EPA also conducted literature searches on the PMN substance and on structurally similar substances, i.e., structural analogues.

Using this information, EPA assessed seven major areas of potential concern: process chemistry, uses, worker and consumer exposures, environmental releases, health effects, environmental fate, and ecological effects. The Agency also considered other factors, such as economics and impacts on technological innovation, that are not directly associated with the assessment of the risks that the PMN substance may present to human health and the environment. When EPA completed this initial screening of the substance, the Agency concluded that it needed to conduct a more thorough review of certain aspects to focus on specific areas of concern. Therefore EPA has entered the PMN into another series of analyses, the Detailed Review Process. During the Detailed Review, Agency staff is conducting further evaluations and assessments of the following: (1) the degree to which structural and use analogues of the PMN substance can be relied upon to assess the risks that the PMN substance may present to human health and to the environment; (2) the nature and character of those risks; and (3) the exposure associated with the manufacture, processing, use, and disposal of the PMN substance.

Extension of the Notice Review

The results of the initial screen review discussed above are summarized below:

(1) EPA is concerned about potential risks that this substance may present to humans as a skin sensitizer. Because the manufacturer did not provide any data on the potential skin sensitizing effect of the substance, EPA's review relied heavily on data on structurally analogous substances. EPA believes that a metabolite of the PMN substance is structurally related to other substances which have skin sensitizing effects, and therefore the Agency believes the PMN substance may have sensitization potential;

(2) EPA can predict some potential dermal exposure of workers and significant potential for dermal exposure of consumers to the substance during use of the final products containing the substance. The manufacturer provided no information on worker exposure during processing and no estimates of consumer exposure to the PMN substance;

(3) EPA's exposure estimates and concern regarding potential skin sensitization, coupled with the lack of data on this effect, give rise to a significant possibility that this chemical will be regulated under section 5 of the Act.

On the basis of the cited concerns raised during EPA's evaluation of the PMN substance, the significant possibility of further regulation under section 5, and because of the limited time before the end of the review period for the substance (which closes on December 28, 1980), EPA has determined that good cause exists to extend the notice period for an additional 45 days, until February 11, 1981.

EPA needs additional time to assess this chemical substance to determine if regulatory control is appropriate. During the additional 45 days EPA will: (1) evaluate the need for additional data on the PMN substance; (2) determine the need for regulatory control in light of EPA's concerns about the PMN substance; and (3) examine possible control options. Extension of the notice period preserves EPA's authority to initiate a regulatory action under section 5 of the TSCA if the Agency concludes that such an action is appropriate.

The PMN, summaries of communications between the submitter and EPA, and other written material, are available for public inspection in Room 447, East Tower, at the EPA Headquarters address given above. The public record is available from 8 a.m. to 4 p.m., Monday through Friday, except legal holidays. All information that the manufacturer has claimed to be confidential has been deleted from the documents in the public record.

Dated: December 23, 1980.

Edwin H. Clark II,

Acting Administrator.

[FR Doc. 80-40661 Filed 12-30-80; 8:45 am]

BILLING CODE 6560-31-M

[OPTS-50022; TSH-FRL 1716-1]

Versar, Inc.; Data Transfer to Contractor

AGENCY: Environmental Protection Agency (EPA).

ACTION: Notice of data transfer.

SUMMARY: EPA will transfer to its contractor, Versar, Inc., information submitted under subsection 8(b) of the Toxic Substances Control Act (TSCA), 15 U.S.C. 2607(B), so that Versar may perform its task of providing technical assistance in making exposure assessments to support regulations under Section 4 of TSCA. Some of this information may be confidential. Other confidential business information needed by Versar will be obtained by it directly from chemical companies, as agreed upon by the parties.

DATE: The transfer of information to Versar will occur no sooner than January 3, 1981.

FOR FURTHER INFORMATION CONTACT: John B. Ritch, Jr., Director, Industry Assistance Office (TS-793), Office of Pesticides and Toxic Substances, Environmental Protection Agency, 401 M St., SW., Washington, D.C. 20460, 202-554-1404, or Toll free 800-424-9065.

SUPPLEMENTARY INFORMATION: In accordance with section 4(e) of TSCA, the TSCA Interagency Testing Committee (ITC) has periodically recommended lists of chemicals or categories of chemicals to EPA for priority testing in connection with the promulgation of rules under TSCA section 4(a). The Agency is analyzing available data on the listed substances to determine the extent to which testing on each substance will be required. Chemical industry task forces have submitted to the Agency reports on four chemicals recommended by the ITC: mon- and dichlorinated benzenes, tri-, tetra- and pentachlorinated benzenes, cresols, and pyridine. These reports, while not themselves containing confidential business information, include aggregated data that were

prepared from individual company data claimed confidential by the companies. The aggregation of the data was in each case entrusted by industry to a third party such as a private consultant or a law firm. For the Agency to verify the information in the task force reports, it will need to review the original data submitted by individual companies. As part of this evaluation it will also examine information, including confidential business information, submitted for the TSCA Inventory of Chemical Substances under section 8(b) of the Act.

Under an existing contract, number 68-01-5791, as modified, Versar, Inc., of Springfield, Virginia, will help in this evaluation by providing EPA with technical assistance in performance of exposure assessments on the pertinent chemicals. The Agency will transfer to Versar the necessary TSCA Inventory information including any confidential business information. Versar will acquire the remaining data needed to evaluate the task force reports directly from the individual companies or their third party representatives, as agreed upon by the parties involved. On completion of its evaluation of each task force report, Versar will transfer all originals and copies of documents containing confidential business information to EPA and will retain no confidential business information.

Pursuant to 40 CFR 2.306(j), it has been determined that it is necessary for Versar to have access to this information in order to perform its work satisfactorily under this contract. Versar has been authorized to have access to this information under the EPA TSCA Confidential Business Information Security Manual. A security plan for Versar has been approved and the Versar facilities have been inspected and found to be in compliance with the requirements of the TSCA Confidential Business Information Security Manual. Versar is required to treat all TSCA confidential business information in accordance with the requirements of that manual, and its personnel will be required to sign a nondisclosure agreement before they are permitted access to such information.

(Secs. 4 and 8 of TSCA (Pub. L. 94-469; 90 Stat. 2003, 15 U.S.C. 2601 *et seq.*))

Dated: October 7, 1980.

Warren R. Muir,

Deputy Assistant Administrator for Toxic Substances.

[FR Doc. 80-40659 Filed 12-30-80; 8:45 am]

BILLING CODE 6560-01-M

EQUAL EMPLOYMENT OPPORTUNITY COMMISSION

Privacy Act of 1974; Adoption of System of Records

AGENCY: Equal Employment Opportunity Commission.

ACTION: Adoption of an additional system of records, "EEOC-14, Grievance Records."

SUMMARY: The Privacy Act of 1974, 5 U.S.C. § 552a, requires that an agency publish notice of the existence and character of its systems of records in the Federal Register. See 5 U.S.C. § 552a(e)(4).

EFFECTIVE DATE: Notice of ths system of records is effective December 31, 1980.

FOR FURTHER INFORMATION: Clement L. Hyland, Legal Counsel Division, Equal Employment Opportunity Commission, 2401 E Street, N.W., Washington, D.C. 20506, (202) 653-5490.

SUPPLEMENTARY INFORMATION: The Office of Personnel Management (OPM) is planning to delete its government-wide system of records, "OPM/GOVT-2, Grievance Records," from its 1980 annual republication of system of records. The Equal Employment Opportunity Commission (EEOC) hereby gives notice that it has voted to adopt an additional system of records to be entitled "EEOC-14, Grievance Records."

The EEOC's new system duplicates OPM's prior system with some minor changes. The system location and system manager sections have been revised to reflect the EEOC's grievance procedures. New authority for the maintenance of the system has been cited. References to EEOC Order No. 571, which sets out the agency's employee grievance procedures, have been added to the description of the categories of individuals covered by the system, the categories of records in the system, the records access procedure, and the procedures for contesting records. Subparagraph (g) of the description of routine uses has been amended to allow the EEOC or OPM to use the records in the production of statistics or studies. Subparagraph (h) of the description of routine uses has been changed to provide that the EEOC may disclose information to OPM when requested in the performance of its authorized duties. Finally, a reference to the EEOC's Privancy Act regulations has been inserted in the discussion of records access procedures.

EEOC-14 shall be effective December 31, 1980.

Signed in Washington, D.C., this 22nd day of December, 1980.

For the Commission.

Eleanor Holmes Norton,

Chair, Equal Employment Opportunity Commission.

EEOC-14

System name:

Grievance Records.

System location:

These records are located in the Office of Personnel, Equal Employment Opportunity Commission, 2401 E Street, N.W., Washington, D.C. 20506, or in other offices of the EEOC's headquarters and field offices in which the grievances have been filed.

Categories of individuals covered by the system:

Current or former Federal employees who have submitted grievances with the EEOC in accordance with part 771 of the regulations of the Office of Personnel Management (OPM) (5 CFR Part 771) and EEOC Order No. 571, or a negotiated procedure.

Categories of records in the system:

The system contains records relating to grievances filed by the EEOC employees under Part 771 of OPM's regulations and EEOC Order No. 571. These case files contain all documents related to the grievance, including statements of witnesses, reports of interviews and hearings, examiner's findings and recommendations, a copy of the original and final decision, and related correspondence and exhibits. This system includes files and records of internal grievance and arbitration systems that the agency has or may establish through negotiations with recognized labor organizations.

Authority for maintenance of the system:

5 U.S.C. section 301; 44 U.S.C. section 396(a); 5 U.S.C. section 7121.

Routine uses of records maintained in the system, including categories of users and the purposes of such uses:

These records and information in these records may be used:

a. To disclose pertinent information to the appropriate Federal, State, or local agency responsible for investigating, prosecuting, enforcing, or implementing a statute, rule, regulation, or order, where the disclosing agency becomes aware of an indication of a violation or potential violation of civil or criminal law or regulation.

b. To disclose information to any source from which additional information is requested in the course of processing a grievance, to the extent

necessary to identify the individual, inform the source of the purpose(s) of the request and identify the type of information requested.

c. To disclose information to a Federal agency, in response to its request, in connection with the hiring or retention of an employee, the issuance of a security clearance, the conducting of a security or suitability investigation of an individual, the classifying of jobs, the letting of a contract, or the issuance of a license, grant, or other benefit by the requesting agency, to the extent that the information is relevant and necessary to requesting the agency's decision on the matter.

d. To provide information to a congressional office from the record of an individual in response to an inquiry from that congressional office made at the request of that individual.

e. To disclose information to another Federal agency or to a court when the Government is party to a judicial proceeding before the court.

f. By the National Archives and Records Service (General Services Administration) in records management inspections conducted under authority of 44 U.S.C. 2904 and 2908.

g. By the EEOC or OPM in the production of summary descriptive statistics and analytical studies in support of the function for which the records are collected and maintained, or for related work force studies. While published statistics and studies do not contain individual identifiers, in some instances the selection of elements of data included in the study may be structured in such a way as to make the data individually identifiable by inference.

h. To disclose information to officials of the Merit Systems Protection Board including the Office of the Special Counsel; the Federal Labor Relations Authority and its General Counsel; or OPM when requested in performance of their authorized duties.

i. To disclose in response to a request for discovery or for appearance of a witness, information that is relevant to the subject matter involved in a pending judicial or administrative proceeding.

j. To provide information to officials of labor organizations reorganized under the Civil Service Reform Act when relevant and necessary to their duties of exclusive representation concerning personnel policies, practices, and matters affecting work conditions.

Policies and practices for storing, retrieving, accessing, retaining, and disposing of records in the system:

Storage:

These records are maintained in file folders.

Retrievability:

These records are retrieved by the names of the individuals on whom they are maintained.

Safeguards:

These records are maintained in lockable metal filing cabinets to which only authorized personnel have access.

Retention and disposal:

These records are disposed of 3 years after closing of the case. Disposal is by shredding or burning.

System manager(s) and address:

a. When a grievance is pending at the field office level, the system manager is the Director of the Area or District Office. Addresses for these offices are listed in Appendix A of the EEOC's Republication of Privacy Act Systems of Records. See 44 FR 54024 (Sept. 17, 1979), as amended by 45 FR 67459 (Oct. 10, 1980).

b. When a grievance is pending at the headquarters office level, the system manager is the head of the office. Names of headquarters offices, which are located at 2401 E Street, N.W., Washington, D.C. 20506, are listed in Appendix A of the EEOC's Republication of Privacy Act Systems of Records. See 44 FR 54024 (Sept. 17, 1979), as amended by 45 FR 67459 (Oct. 10, 1980).

c. In all other situations, the system manager is the Chief, Labor Relations Branch, Personnel Division, 2401 E Street, N.W., Washington, D.C. 20506.

Notification procedure:

It is required that individuals submitting grievances be provided a copy of the record under the grievance process. They may, however, contact the agency personnel or designated office where the action was processed regarding the existence of such records on them. They must furnish the following information for their records to be located and identified:

a. Name.

b. Date of birth.

c. Approximate date of closing of the case and kind of action taken.

d. Organizational component involved.

Records access procedures:

It is required that individuals submitting grievances be provided a copy of the record under the grievance process. However, after the action has been closed, an individual may request access to the official copy of the grievance file by contacting the agency personnel or designated office where the action was processed.

Individuals must provide the following information for their records to be located and identified:

a. Name.

b. Date of birth.

c. Approximate date of closing of the case and kind of action taken.

d. Organizational component involved.

Individual requesting access must also follow the EEOC's Privacy Act regulations regarding access to records and verfification of identity [29 CFR Part 1611].

Contesting record procedures:

Review of requests from individuals seeking amendment of their records which have been the subject of a judicial or quasi-judicial action will be limited in scope. Review of amendment requests of these records will be restricted to determining if the record accurately documents the action of the agency ruling on the case, and will not include a review of the merits of the action, determination, or finding.

Individuals wishing to request amendment to their records to correct factual errors should contact the agency personnel or designated office where the grievance was processed. Individuals must furnish the following information for their records to be located and identified:

a. Name.

b. Date of birth.

c. Approximate date of closing of the case and kind of action taken.

d. Organizational component involved.

Individual requesting access must also follow the EEOC's Privacy Act regulations regarding amendment to records and verfification of identity [29 CFR Part 1611].

Record source categories::

Information in this system of records is provided:

a. By the individual on whom the record is maintained.

b. By testimony of witnesses.

c. By agency officials.

d. From related correspondence from organizations or persons.

[FR Doc. 80-40443 Filed 12-30-80; 8:45 am]
BILLING CODE 6570-06-M

FEDERAL EMERGENCY MANAGEMENT AGENCY

Finding of no Significant Impact on Environment of Relocation of Federal Emergency Management Agency Personnel From Thomasville, Georgia, to Atlanta, Georgia

Pursuant to Section 102(2)(c) of the National Environmental Policy Act of 1969 and the implementing regulations of the Council on Environmental Quality (40 CFR Parts 1500–1508) and the Federal Emergency Management Agency (FEMA) (44 CFR Part 10), FEMA has prepared an environmental assessment of the relocation, consolidation and related moves of personnel with associated functions, records, furniture and equipment from Thomasville, Georgia to Atlanta, Georgia.

The assessment concludes that this action will not result in a significant impact on the natural or man-made environment.

It is hereby found that this action does not constitute a major Federal action significantly affecting the quality of the human environment. On this basis, an environmental impact statement will not be prepared.

Dated: December 16, 1980.

John W. Macy, Jr.,

Director.

[FR Doc. 80-40625 Filed 12-30-80; 8:45 am]

BILLING CODE 6718-01-M

FEDERAL HOME LOAN BANK BOARD

[No. 80-834]

Federal Savings and Loan Advisory Council; Renewal of Charter

Dated: December 22, 1980.

Pursuant to the provisions of Section 8a of the Federal Home Loan Act, as amended (12 U.S.C. 1428a), the following notice has been adopted by the Federal Home Loan Bank Board for publication in the Federal Register:

Pursuant to the provisions of Section 9 of the Federal Advisory Committee Act (5 U.S.C. App. I), and the implementing regulations issued by the Office of Management and Budget, the Federal Home Loan Bank Board, having determined that the continuation of the Federal Savings and Loan Advisory Council is in the public interest in connection with the performance of the duties imposed on it by law, hereby renews the existence of the Federal Savings and Loan Advisory Council for two years to January 31, 1983, and in connection therewith reissues the following charter (which appears as Section 8a of the Federal Home Loan Bank Act, as amended (12 U.S.C. 1428a)) to the said Council:

Federal Savings and Loan Advisory Council Charter

There is hereby created a Federal Savings and Loan Advisory Council, which shall continue to exist as long as the Bank Board biannually determines, as a matter of formal record, with timely notice in the Federal Register, to be in the public interest in connection with the performance of duties imposed on the Council by law. The Council shall, in all other respects, be subject to the provisions of the Federal Advisory Committee Act. The Council shall consist of one member for each Federal Home Loan Bank district to be elected annually by the Board of Directors of the Federal Home Loan Bank in such district and twelve members to be appointed annually by the Bank Board to represent the public interest. Each such elected member shall be a resident of the district for which he is elected. All members of the Council shall serve without compensation, but shall be entitled to reimbursement from the Bank Board for actual subsistence expenses, not to exceed $75.00 per day and transportation and other incidental travel expenses in accordance with the Federal Travel Regulations, as amended. The Council shall meet in Washington, District of Columbia, at least twice a year and oftener if requested by the Bank Board. The Council shall select its chairman, vice chairman, and secretary, and adopt methods of procedure, and shall have power——

(1) To confer with the Bank Board on general business conditions, and on special conditions affecting the Federal Home Loan Banks and their members and the Federal Savings and Loan Insurance Corporation.

(2) To request information, and to make recommendations, with respect to matters within the jurisdiction of the Bank Board and the Federal Savings and Loan Insurance Corporation.

The Federal Home Loan Bank Board also has directed, in connection with the foregoing, that—

1. The Federal Savings and Loan Advisory Council's estimated budget of $75,000 paid for by the self-supporting Federal Home Loan Bank System, and none of its annual operating costs shall be charged to or paid by the United States;

2. The said Charter of the Federal Advisory Council shall not be amended, altered, or repealed except by Congress or by the Federal Home Loan Bank Board; and

3. The said Charter shall terminate on January 31, 1983, unless reissued prior to that date by the Federal Home Loan Bank Board.

Federal Savings and Loan Advisory Council.

Robert D. Linder,

Executive Secretary.

Federal Home Loan Bank Board.

J. J. Finn,

Secretary.

[FR Doc. 80-40653 Filed 12-30-80; 8:45 am]

BILLING CODE 6720-01-M

FEDERAL LABOR RELATIONS AUTHORITY

Interpretation and Guidance Relating to Inclusion of Employees in Units and Coverage of Merit Pay Provisions

AGENCY: Federal Labor Relations Authority.

ACTION: Interpretation and guidance relating to inclusion of employees in units and coverage of merit pay provisions.

SUMMARY: This interpretation and guidance relates to the impact of an agency determination concerning "merit pay" coverage on a unit of exclusive recognition.

EFFECTIVE DATE: December 16, 1980.

FOR FURTHER INFORMATION CONTACT: James J. Shepard, Executive Director, 1900 E Street, NW., Washington, D.C. 20424, 202-254-9595.

SUPPLEMENTARY INFORMATION:

The Federal Labor Relations Authority was established by Reorganization Plan No. 2 of 1978, effective January 1, 1979 (43 FR 36037). Since January 11, 1979, the Authority has conducted its operations under the Federal Service Labor-Management Relations Statute (92 Stat. 1191).

As previously announced (45 FR 24231, April 9, 1980), the Authority determined, in accordance with its regulations and the Federal Service Labor-Management Relations Statute (92 Stat. 1191), to issue an interpretation and guidance relating to the impact of an agency determination concerning "merit pay" coverage on a unit of exclusive recognition. Interested persons were invited to express their views in writing on the matter involved. After careful consideration of the submissions by diverse labor organizations and agencies, the Authority issued its Interpretation and Guidance, expressing the views of the Authority on the matter.

[4 FLRA No. 99]

United States of America Before the Federal Labor Relations Authority, Washington, D.C.

[Case No. O-PS-15]

Interpretation and Guidance

Introduction

As announced in its Notice of April 1, 1980,[1] the Authority determined, in conformity with § 2427.2 of its rules and regulations (5 CFR 2427.2), and the Federal Service Labor-Management Relations Statute (the Statute) (5 U.S.C. 7101 *et seq.*), that an interpretation of the Statute was warranted on the following question:

What is the impact, if any, of an agency determination that an employee is a supervisor or management official for purposes of coverage under the "merit pay" provisions of the Civil Service Reform Act of 1978 (92 Stat. 1179) on such employee's inclusion in a unit of exclusive recognition under section 7112 of the Statute (92 Stat. 1200)?

The Authority invited interested persons to express their views in writing concerning the question. The responses submitted to the Authority by seven labor organizations and six Federal agencies were detailed and helpful and have been carefully considered. In view of the extent and detail of these submissions, the Authority has determined that no useful purpose would be served by providing for an oral hearing.

Conclusion

When an agency determines that an employee is a supervisor or management official for purposes of coverage under the "merit pay" provisions of the Civil Service Reform Act of 1978, that Determination has no impact on such employee's inclusion in or exclusion from a unit of exclusive recognition under section 7112 of the Statute.

Background

The Civil Service Reform Act of 1978 effected several major changes in the system of Federal personnel management. Among these changes were the establishment of a statutory labor-management relations program under title VII and the introduction of a program for merit pay under title V.

[1] Federal Labor Relations Authority, *Notice Relating to Inclusion of Employees in Units and Coverage of Merit Pay Provisions*, 45 FR 24,231 (April 9, 1980). This Notice was issued in response to a request for a major policy determination submitted by the National Federation of Federal Employees.

1. Title VII of the Civil Service Reform Act of 1978—Federal Service Labor-Management Relations

The enactment of title VII, the Federal Service Labor-Management Relations Statute, was a recognition of the right of Federal employees to organize, bargain collectively, and participate through labor organizations in decisions which affect them.[2] In so recognizing, Congress specifically found that labor organizations and collective bargaining in the civil service are in the public interest.[3]

Title VII prescribes, *inter alia*, the composition, organization, and responsibilities of the Federal Labor Relations Authority. The Authority's powers and duties are set forth in section 7105 of the Statute. In section 7105(a)(1) the Authority is given the general responsibility for providing "leadership in establishing policies and guidance relating to matters under this chapter," and, except as otherwise provided, "for carrying out the purpose of this chapter." In furtherance of this general charge, the Authority is given the power, *inter alia*, in section 7105(a)(2)(A), to "determine the appropriateness of units for labor organization representation under section 7112 of this title[.]" The Authority among its other responsibilities, is also empowered by section 7105(a)(2)(G) to "conduct hearings and resolve complaints of unfair labor practices under section 7118 of this title[.]"

With regard to the Authority's power to determine appropriate bargaining units under section 7105(a)(2)(A), section 7112(b)(1) prohibits finding a proposed unit to be appropriate "if it includes [except in circumstances not relevant here] any management official or supervisor[.]" The terms "supervisor" and "management offical" are defined respectively in section 7103(a)(10) and (11) of the Statute.[4] Thus, in the process of determining the appropriateness of bargaining units, the Authority is required to interpret and apply the definitions of "supervisor" and "management official" in the Statute.

Decisions as to interpretation and application of the terms "supervisor" and "management official" have even wider implications since section 7102 guarantees certain rights to "employees," but section 7103(a)(2)(B)(iii) explicitly excludes a "supervisor" or a "management official" from the definition of "employee" and, as a consequence, from the rights granted by section 7102. By means of the unfair labor practice procedures set forth in section 7118, the Authority is charged with assuring the rights granted to employees and labor organizations are not abridged.

2. Title V. of the Civil Service Reform Act of 1978—Merit Pay

The policy underlying the enactment of title V is that in appropriate instances, pay increases should be based on quality of performance rather than length of service.[5] Therefore, title V provides for a Merit Pay System to "recognize and reward quality performance by varying pay adjustments." [6] According to section 5401(b)(1), title V is applicable "to any supervisor or management official (as defined in paragraphs (10) and (11) of section 7103 of title VII,[7] respectively) who is in a position which is in GS-13, 14, or 15 of the General Schedule * * *." (Footnote added.) Section 5402(a) of title V provides that the "Office of Personnel Management shall establish a merit pay system which shall provide for a range of basic pay for each grade to which the system applies * * *." Section 5405 of title V states that the "Office of Personnel Management shall prescribe regulations to carry out the purpose of this chapter." In compliance with this latter responsibility, the Office of Personnel Management has published regulations.[8] Section 540.102(c) of the regulations requires that, "The head of each agency shall identify employees who are supervisors or management officials for purposes of coverage by the Merit Pay System."[9]

Thus, the Congress assigned to the Office of Personnel Mangement responsibility for the establishment and regulation of the Merit Pay System prescribed by title V of the Civil Service Reform Act. In furtherance of that responsibility, the Office of Personnel Management has charged agency heads with the authority to determine which employees meet the criteria for coverage by the Merit Pay System, i.e., which employees are "supervisors" or "management officials" for merit pay purposes. This determination is made by reference to the definition of "supervisor" and "management official" contained in title VII.

Discussion

While procedures are available to acertain employee rights under title VII, it is a fundamental purpose of that title to afford both labor organizations and agencies an opportunity to work out their differences arising under title VII to the maximum extent possible without

[2] 5 U.S.C. 7101(a)(1) (Supp. II 1978).

[3] 5 U.S.C. 7101(a) (Supp. II 1978).

[4] Section 7103 provides in pertinent part:

(a) For the purpose of this chapter—

* * * * *

(10) "supervisor" means an individual employed by an agency having authority in the interest of the agency to hire, direct, assign, promote, reward, transfer, furlough, layoff, recall, suspend, discipline, or remove employees, to adjust their grievances, or to effectively recommend such action, if the exercise of the authority is not merely routine or clerical in nature but requires the consistent exercise of independent judgment exept that, with respect to any unit which includes firefighters or nurses, the term "supervisor" includes only those individuals who devote a preponderance of their employment time to exercising such authority;

(11) "management official" means an individual employed by an agency in a position the duties and responsibilities of which require or authorize the individual to formulate, determine, or influence the policies of the agency[.]

[5] *See* Civil Service Reform Act of 1978, Findings and Statement of Purpose, Sec. 3(7). 5 U.S.C. 1101 note (Supp. II 1978).

[6] 5 U.S.C. 5401(a)(1)(A) (Supp. II 1978).

[7] Note 4, *supra*.

[8] 44 FR 52,161 (1979), codified at 5 CFR Part 540 (1980).

[9] 5 CFR 540.102(c) (1980).

resort to the processes of the Authority, and they are encouraged to do this. The instant request for a major policy determination arose from an alleged management practice of removing employees from bargaining units pursuant to merit pay determinations.

From the plain language of the provisions of title VII as summarized above, it is clear Congress assigned final responsibility to the Federal Labor Relations Authority for determinations as to whether an individual is, for purpose of title VII, a supervisor or management official, and, therefore, whether such an individual should or should not be included in a unit of exclusive recognition.

There is no indication of any kind in the legislative history of title VII that Congress intended otherwise. Thus, an agency would act at its own peril in removing an employee from an established bargaining unit simply because of a determination that such employee is a supervisor or management official for merit pay purposes. If there is a move contemplated to remove an employee from an established bargaining unit simply because of a merit pay determination, there are procedures available under title VII to resolve questions related to the removal.

It must be noted that there is no provision in the Civil Service Reform Act nor any indication in its legislative history that any responsibility has been assigned to the Federal Labor Relations Authority for the determination of whether an individual is a supervisor or management official for purposes of the Merit Pay System under title V (other than within the Authority itself). Rather, it is evident that the Authority is without such jurisdiction since the merit pay provisions of title V must be implemented by agencies relying upon the definitions contained in title VII, regardless of whether or not a collective bargaining unit has been established. Such provisions apply not only to supervisors and managers as defined in title VII, but also to individuals who are not included in collective bargaining units, as well as individuals excluded from the coverage of title VII.

Determinations as to an individual's supervisory or management status made under titles V and VII of the Civil Service Reform Act are related to the extent that those who administer the respective separate titles utilize the same definitions of supervisor and management official. However, determinations under title V of status as a supervisor or management official for merit pay purposes does not confer supervisory or managerial status under title VII. Since it is not within the jurisdiction of the Authority to determine whether an individual is a supervisor or management official for merit pay purposes under title V, it follows that it is outside the jurisdiction of the Authority to direct agencies to follow the binding determinations of the Authority as to whether an individual is a supervisor or management official under title VII when agencies are implementing the merit pay provisions of title V.

In summary, it is within the jurisdiction of the Authority to make final determinations under appropriate representation or unfair labor practice case procedures as to whether an individual is a supervisor or management official for the purposes of title VII of the civil Service Reform Act. It is not within the jurisdiction of the Authority to make determinations as to whether an individual is a supervisor or management official for the purposes of title V of the Civil Service Reform Act. Conversely, when an agency determines that an employee is a supervisor or management official for purposes of coverage under the "merit pay" provisions of title V of the Civil Service Reform Act of 1978, that determination has no impact on whether such employee is or is not a supervisor or management official for purposes of title VII. Thus, when an agency determines that an employee is a supervisor or management official for purposes of coverage under the "merit pay" provisions of the Civil Service Reform Act of 1978, that determination has no impact on such employee's inclusion in or exclusion from a unit or exclusive recognition under section 7112 of the Statute.

Issued: Washington, D.C., December 16, 1980.

Ronald W. Haughton,
Chairman.

Henry B. Frazier, III,
Member.

Leon B. Applewhite,
Member.

[FR Doc. 40586 Filed 12-24-80; 11:32 am]
BILLING CODE 6325-19-M

GENERAL SERVICES ADMINISTRATION

National Archives and Records Service

National Archives Advisory Council; Meeting

Notice is hereby given that the National Archives Advisory Council will meet on January 15, 1981, from 2:30 p.m. to 5:30 p.m. and January 16, 1981, from 9:00 a.m. to 4:30 p.m. in Room 105, National Archives and Records Service, 8th and Pennsylvania Avenue, N.W., Washington, D.C. 20408. The meeting will be devoted to a review of the current state of the Archives, reports from Council Subcommittees, discussion of future role of Archives Advisory Council, and related matters of concern to the operation of the National Archives and Records Service of the United States.

The meeting will be open to the public.

Dated: December 18, 1980.

Robert M. Warner,
Archivist of the United States.

[FR Doc. 80-40602 Filed 12-30-80; 8:45 am]
BILLING CODE 6820-26-M

DEPARTMENT OF HEALTH AND HUMAN SERVICES

Office of the Secretary

Consumer Affairs Council; Meeting

SUMMARY: This notice announces the date and time of the next regular HHS Consumer Affairs Council meeting. All are welcome to attend as observers and participate in an open discussion period that will be held during the last half hour of the meeting. If you would like an agenda, please contact Susan L. Randolph. A hearing interpreter will be provided for the deaf.

DATE: Thursday, January 8, 1981, 10-12 noon.

ADDRESS: 200 Independence Avenue, SW., Rooms 403A-425A, Washington, D.C. 20201.

FOR FURTHER INFORMATION CONTACT: Susan L. Randolph, Assistant—Office of Consumer Affairs, 200 Independence Avenue, SW.—Rm. 622E, Washington, D.C. 20201, (202) 245-0409.

Dated: December 22, 1980.

Belle B. O'Brien,
Assistant to the Secretary for Consumer Affairs.

[FR Doc. 80-40620 Filed 12-30-80; 8:45 am]
BILLING CODE 4110-12-M

Public Health Service

Health Maintenance Organizations

AGENCY: Public Health Service, HHS.

ACTION: Notice, November—qualified health maintenance organization.

SUMMARY: This notice sets forth the name, address, service area, and date of qualification of an entity determined by the Secretary to be a qualified health

maintenance organization (HMO). In addition, a service area revision of a previously qualified HMO is reported.

FOR FURTHER INFORMATION CONTACT: Howard R. Veit, Director, Office of Health Maintenance Organizations, Park Building—Third Floor, 12420 Parklawn Drive, Rockville, Maryland 20857, 301/443-4106.

SUPPLEMENTARY INFORMATION: Regulations issued under Title XIII of the Public Health Service Act, as amended, (42 CFR 110.605(b)) require that a list and description of all newly qualified HMOs be published on a monthly basis in the Federal Register. The following entity has been determined to be a qualified HMO under Section 1310(d) of the Public Health Service Act (42 U.S.C. 300e-9(d)):

Qualified Health Maintenance Organizations

Name, Address, Service Area, and Date of Qualification

(Operational Qualified Health Maintenance Organization: 42 CFR 110.603(a))

1. International Medical Centers, Inc., (Staff Model, see section 1310(b)(1) of the Public Health Service Act), 2900 Palm Avenue, Hialeah, Florida 33012. Service area: Dade County, Florida. Date of qualification: November 26, 1980.

Service Area Revision

1. Foundation Health Plan, 650 University Avenue, Sacramento, California 95825. Service area: Add the following to the information contained in the cumulative list of qualified HMOs published on March 3, 1980, in the Federal Register, 45 FR 13895: Amador, Calaveras, Tuolomne, and San Joaquin Counties, California. Effective date: November 3, 1980.

Files containing detailed information regarding qualified HMOs will be available for public inspection between the hours of 8:30 a.m. and 5:00 p.m. on Tuesdays and Thursdays, except for Federal holidays, in the Office of Health Maintenance Organizations, Office of the Assistant Secretary for Health, Department of Health and Human Services, Park Building, 3rd Floor, 12420 Parklawn Drive, Rockville, Maryland 20857.

Questions about the qualification review process or requests for information about qualified HMOs should be sent to the same office.

Dated: December 18, 1980.

Howard R. Veit,

Director, Office of Health Maintenance Organizations.

[FR Doc. 80-40576 Filed 12-30-80; 8:45 am]

BILLING CODE 4110-85-M

SOCIAL SECURITY ADMINISTRATION

Dominica; Finding Regarding Foreign Social Insurance or Pension System

AGENCY: Social Security Administration, HHS.

ACTION: Notice of finding regarding foreign social insurance or pension system—Dominica.

FINDING: Section 202(t)(1) of the Social Security Act (42 U.S.C. 402(t)(1)) prohibits payment of monthly social security benefits to any individual who is not a U.S. citizen or national for any month after he or she has been outside the United States for six consecutive months. This prohibition does not apply to such an individual where one of the exceptions described in section 202(t)(2) through 202(t)(5) of the Social Security Act (42 U.S.C. 402(t)(2) through (t)(5)) affects his or her case.

Section 202(t)(2) of the Social Security Act provides that the prohibition against payment shall not apply to any individual who is a citizen of a country which the Secretary of Health and Human Services finds has in effect a social insurance or pension system which is of general application in such country and which:

(a) Pays periodic benefits, or the actuarial equivalent thereof, on account of old-age, retirement, or death; and

(b) Permits individuals who are U.S. citizens but not citizens of that country and who qualify for such benefits to receive those benefits, or the actuarial equivalent thereof, while outside the foreign country regardless of the duration of the absence.

The Secretary of Health and Human Services has delegated the authority to make such a finding to the Commissioner of Social Security. The Commissioner has redelegated that authority to the Director, Office of International Policy. Under that authority the Director, Office of International Policy, has approved a finding that Dominica, beginning November 3, 1978, has a social insurance system of general application which:

(a) Pays periodic benefits, or the actuarial equivalent thereof, on account of old-age, retirement, or death; and

(b) Permits U.S. citizens who are not citizens of Dominica to receive such benefits, or their acturial equivalent, at the full rate without qualification or restriction while outside Dominica.

Accordingly, it is hereby determined and found that Dominica has in effect, beginning November 3, 1978, a social insurance system which meets the requirements of section 202(t)(2) of the Social Security Act (42 U.S.C. 402(t)(2)).

FOR FURTHER INFORMATION CONTACT: Armand Esposito, Room 4234, West High Rise Building, 6401 Security Boulevard, Baltimore, Maryland 21235, (301) 594-7455.

(Catalog of Federal Domestic Assistance Programs No. 13.802 Social Security—Disability Insurance; 13.803 Social Security—Retirement Insurance; 13.805 Social Security—Survivors Insurance)

Dated: December 12, 1980.

Thomas C. Parrott,

Director, Office of International Policy.

[FR Doc. 80-40582 Filed 12-30-80; 8:45 am]

BILLING CODE 4110-07-M

DEPARTMENT OF INTERIOR

Bureau of Land Management

Multiple Use Advisory Council Meeting

December 18, 1980.

Notice is hereby given, in accordance with Pub. L. 94-579 and 43 CFR Part 1780, that the second meeting of the Elko District Multiple Use Advisory Council will be held on February 4, 1981, at the Stockmen's Motor Hotel, 340 Commercial Street, Elko, Nevada 89801. The meeting will begin at 8:30 a.m. and is open to the public.

The agenda for the meeting includes:

1. The Desert Land Entry program, and specifically, the processing of applications in Ruby Valley;
2. Issues and draft planning criteria developed for the Wells Resource Management Plan;
3. Proposed amendments to the Bureau's grazing regulations (43 CFR Parts 4100, 4110, 4120, 4130, 4140, 4150, 4160, and 4170); and
4. Final regulations regarding surface management of the public lands under the U.S. mining laws (43 CFR Part 3809).

Other topics may be introduced for the Council's consideration by district personnel, Council members or members of the public.

Written comments from the public are invited and may be filed with the District Manager in advance of the meeting. The Council will hear oral statements between 11:30 a.m. and 12:00 p.m. Any person wishing to make a statement should notify the District Manager at 2002 Idaho Street, P.O. Box 831, Elko, Nevada 89801, phone (702) 738-4071, by February 2. Depending on the number of persons wishing to make oral statements, a time limit may be imposed for each speaker.

Summary minutes of the meeting will be maintained in the District Office, and will be available for public inspection

and reproduction from 7:30 a.m. to 4:30 p.m., Monday—Friday, within 30 days after the meeting.

Rodney Harris,

District Manager.

[FR Doc. 80-40578 Filed 12-30-80; 8:45 am]

BILLING CODE 4310-84-M

Nevada; Filing of Plats of Survey and Order Providing for Opening of Lands

1. The Plat of Survey of lands described below will be officially filed at the Nevada State Office, Reno, Nevada, effective at 10:00 a.m., on February 1, 1981:

Mount Diablo Meridian, Nevada

T. 40 N., R. 54 E.,
Sections 37 and 38 and Tract Numbers 39, 40, 41 and 42.

2. The portion of the township surveyed is rolling, draining easterly into the North Fork of the Humboldt River. Soil is clay loam and gravel. The vegetation is mostly sagebrush and bunchgrass. There is no timber and no mineral formations noted during the survey. There are no settlements in the township.

3. Subject to valid existing rights, the provisions of existing withdrawals and classifications, and the requirements of applicable law, the lands are hereby opened to such applications and petitions as may be permitted. All such valid applications received at or prior to 10:00 a.m. on February 1, 1981, shall be considered as simultaneously filed at that time. Those received thereafter shall be considered in order of filing.

Inquiries concerning these lands shall be addressed to the Nevada State Office, Bureau of Land Management, 300 Booth Street, P.O. Box 12000, Reno, Nevada 89520.

Dated: December 17, 1980.

Loyd C. Miller,

Chief, Branch of Records and Data Management.

[FR Doc. 80-40579 Filed 12-30-80; 8:45 am]

BILLING CODE 4310-84-M

Oregon; Filing of Plat of Survey

December 19, 1980.

1. Plat of survey of the lands described below will be officially filed in the Oregon State Office, Portland, Oregon at 7:30 a.m. on February 6, 1981.

Willamette Meridian

T. 41 S., R. 13 W.,
Sec. 6, Lot 9;
Sec. 7, Lot 2.

The area described aggregates 2.88 acres.

2. This plat represents a survey of Zwagg Island, and reestablishment of a lost meander corner.

3. Zwagg Island is located in the Pacific Ocean offshore of the City of Brookings, Oregon. Bare 100' cliffs surround the flat top of the island. Rich soil on top of the island supports dense growth of brush and small sitka spruce. Access is readily available at low tides from Mill Beach, and the top is accessible by a primitive trail which cuts across the rock face on the northeast end of the island. The character of the island is non-mineral.

4. Zwagg Island is public land being studied by the Bureau of Land Management to determine whether the island should be recommended for designation as a wilderness area by Congress.

Roger F. Dierking,

Chief, Branch of Records and Data Management.

[FR Doc. 80-40577 Filed 12-30-80; 8:45 am]

BILLING CODE 4310-84-M

Salt Lake District, Utah; Realty Action Public Sale

AGENCY: Bureau of Land Management, Salt Lake District.

ACTION: Notice.

SUMMARY: The following described public lands have been determined to be suitable for disposal by public sale under Section 203 of the Federal Land Policy and Management Act of 1976, 43 U.S.C. 1713:

Commencing west 1320 feet from the quarter corner common to Sections 34 and 35 in T 9 S., R 1 E., SLB&M, Utah, thence west 265.62 feet to a fence line, thence N 1°54' W 156.50 feet along a fence line, thence N 0°34' W 364.40 feet along a fence line, thence N 0°09' E 459.00 feet along a fence line, thence N 2°35' E 306.00 feet to a fence corner, thence N 83°57' E 250.43 feet along a fence line, thence south 1311.89 feet to the point of beginning, totalling 7.87 acres.

DATE: For a period of 45 days interested parties may submit comments to the Secretary of the Interior, LLM-320, Washington, D.C. 20240. Any adverse comments will be evaluated by the Secretary, who may vacate or modify this realty action and issue a final determination. In the absence of any action by the Secretary, this realty action will become the final determination of the Department.

FOR FURTHER INFORMATION CONTACT: Detailed information concerning the sale, including the environmental assessment and the record of public discussions, is available for review at the Salt Lake District Office, 2370 South 2300 West, Salt Lake City, Utah 84119.

SUPPLEMENTARY INFORMATION: The purpose of the public sale is to settle an unintentional trespass involving the above-described lands. The sale has been discussed with Utah County and State of Utah officials, and is consistent with planning. The public interest will be well served by making the sale.

The sale will be made at the fair market value of the land; the sale will be non-competitive and will be offered only to Mrs. Myrtle B. Rowley, Santaquin, Utah. No bids will be accepted. The following patent reservations will be made at the time of the sale:

(1) Ditches and canals.

(2) All minerals, together with the right of ingress and egress to prospect for, mine and remove the same under applicable law.

(3) Valid existing rights.

Frank W. Snell,

District Manager.

[FR Doc. 80-40573 Filed 12-30-80; 8:45 am]

BILLING CODE 4310-84-M

Utah; Final Wilderness Inventory Decisions Are in Effect

AGENCY: Bureau of Land Management, Interior.

ACTION: Notice.

SUMMARY: This notice announces that the final decisions on the Intensive Wilderness Inventory findings within the state of Utah became effective on December 15, 1980 at 4:30 p.m., except for the following units on which a formal protest was filed:

Salt Lake District

UT-020-037 New Foundland Mountains
UT-020-129/050-130A Dugway Mountains

Cedar City District

UT-040-075 Horse Spring Canyon
UT-040-076 Carcass Canyon
UT-040-077 Mud Spring Canyon
UT-040-078 Death Ridge
UT-040-079 Burning Hills
UT-040-080 Fifty Mile Mountain
UT-040-082 Scorpion
UT-040-104 Mountain Home Range
UT-040-132 Red Mountain
UT-040-204B Central Wah Wah Range
UT-040-216 White Rock Range
UT-040-217 Moquith Mountain
UT-040-230 Parunuweap Canyon
UT-040-247 Paria-Hackberry
UT-040-248 Wahweap
UT-040-255 Upper Kanab Creek
UT-040-266 East of Bryce

Richfield District

UT-050-061 Swasey Mountain
UT-050-221 Fremont Gorge
UT-050-237 Horseshoe Canyon
UT-050-238 Blue Hills—Mt. Ellen
UT-050-241 Fiddler Butte
UT-050-248 Mt. Pennell
UT-050-257 Notom Bench

Moab District

UT-060-023 Sids Mountain
UT-060-054 Mexican Mountain
UT-060-068A Desolation Canyon
UT-060-068B Floy Canyon
UT-060-100B Diamond Canyon
UT-060-100C Cottonwood Canyon
UT-060-116/117 Wrigley Mesa/Jones Canyon
UT-060-122 Granite Creek
UT-060-138 Negro Bill Canyon
UT-060-139A Mill Creek
UT-060-165 Sixshooter Peak
UT-060-171 Sweet Alice Canyon
UT-060-175 Middle Point
UT-060-181 Mancos Mesa
UT-060-188 Pine Canyon
UT-060-191 Cheese Box Canyon
UT-060-194 Harmony Flat
UT-060-196 Bullet Canyon
UT-060-197/198 Slickhorn Canyon
UT-060-201 Road Canyon
UT-060-204 Fish Creek Canyon
UT-060-205A Arch Canyon
UT-060-205B Mule Canyon
UT-060-224 Sheiks Flat
UT-060-227 Squaw & Papoose Canyons
UT-060-229 Cross Canyon

Vernal District

UT-080-103 West Cold Springs
UT-080-104 Wild Mountain
UT-080-110 Hoy Mountain
UT-070-113 Diamond Breaks
UT-080-419 Bull Canyon
UT-080-730 Winter Ridge

Instant Study Areas (ISA's)

ISA Grand Gulch

The units listed above will remain under management restrictions imposed by Section 603(c) of the Federal Land Policy and Management Act (FLPMA). The effective date of the decision on those units will be deferred unitl the BLM Utah State Director issues a decision on the individual unit protest. The decisions on all other inventory units listed below and as announced in the November 14, 1980 Federal Register, (vol. 45, No. 222) are now in effect.

Salt Lake District

UT-020-001 Little Goose Creek No. 1
UT-020-011 Wagon Box Pass
UT-020-012 Wagon Box Pass
UT-020-040A Silver Island Mountains
UT-020-040B Silver Island Mountains
UT-020-040C Silver Island Mountains
UT-020-042 North Salt Desert
UT-020-044 Ferber Wash
UT-020-046 Utah Peak
UT-020-047 Utah Peak
UT-020-050 Ferber Flat
UT-020-053 Northeast Corner
UT-020-054 Northeast Corner
UT-020-057 Northeast Corner
UT-020-087 North Cedar Mountains
UT-020-089 North Stansbury Mountains
UT-020-094 Cedar Mountains
UT-020-010 Big Creek
UT-020-102 Dry Canyon
UT-020-105 Big Hollow
UT-020-111 Onaqui Mountains

Cedar City District

UT-040-041B Black Ridge-LaVerkin
UT-040-061 Steep Creek
UT-040-074 Colt Mesa
UT-040-081 Allen Dump
UT-040-085 Dance Hall Rock
UT-040-087 Sooner Water
UT-040-088 Sooner Bench
UT-040-089 Willow Gulch
UT-040-090 Cave Point
UT-040-091 Fifty Mile Creek
UT-040-092 Coyote Gulch
UT-040-142 Crater Hill
UT-040-144 Shunes Hollow
UT-040-145 Orderville Canyon
UT-040-146 Deep Creek
UT-040-147 Red Butte
UT-040-148 Spring Canyon
UT-040-149 The Watchman
UT-040-150 North Fork Virgin River
UT-040-153 LaVerkin Creek Canyon
UT-040-154 Taylor Creek Canyon
UT-040-155 Sunset Canyon
UT-040-173 Shunesburg
UT-040-174 Jolley Gulch
UT-040-175 Home Valley Knoll
UT-040-176 Goose Creek Canyon
UT-040-177 Beartrap Canyon
UT-040-179 Rockville Bench
UT-040-235 Flood Canyon
UT-040-245 Brigham Plains
UT-040-246 Nephi Wash
UT-040-249 Coyote Creek
UT-040-268 The Blues

Richfield District

UT-050-019 Kern Mountains
UT-050-029 Granite Spring
UT-050-073 Wah Wah Mountains
UT-050-113 Thomas Range
UT-050-127 Fish Springs Range
UT-050-242 Bull Mountain
UT-050-244 Ragged Mountain
UT-050-247 Little Rockies
UT-050-249 Mt. Hillers
UT-050-253 Long Canyon

Moab District

UT-060-025 Devils Canyon
UT-060-026 North Big Ridge
UT-060-028A Crack Canyon
UT-060-028B Cistern Canyon
UT-060-028C Chute Canyon
UT-060-029A San Rafael Reef
UT-060-045 Horseshoe Canyon
UT-060-053 Cedar Mountain
UT-060-067 Turtle Canyon
UT-060-070 Jack Creek
UT-060-072 Dry Canyon
UT-060-075 Harmon Canyon
UT-060-076 Cow Canyon
UT-060-077 Argyle Ridge
UT-060-088 South Goose Neck
UT-060-100A Westwater Creek
UT-060-118 West Water Canyon
UT-060-119 Big Triangle
UT-060-120 Renegade Point
UT-060-131A North Lost Spring Canyon
UT-060-131B South Lost Spring Canyon
UT-060-137 Mary Jane Canyon
UT-060-140A Behind the Rocks
UT-060-164 Lockhart Basin
UT-060-167 Bridger Jack Mesa
UT-060-169 Butler Wash
UT-060-232 Little Ruin Canyon

Vernal District

UT-080-200 Stone Bridge Draw
UT-080-208 Boone Springs
UT-080-414 Daniel's Canyon
UT-080-415 Moonshine Draw
UT-080-605 Sand Wash
UT-080-612 Nine Mile Canyon
UT-080-615 Argyle Canyon
UT-080-616 Devils Canyon
UT-080-707 East Big Pack Mountain
UT-080-708 Big Pack Mountain
UT-080-709 West Pack Mountain
UT-080-715 Bitter Creek
UT-080-721 Atchee Ridge
UT-080-722 Rat Hole Ridge

Instant Study Areas (ISA's)

Cedar City District

North Escalante Canyon (ISA)
The Gulch (ISA)
Phipps-Death Hollow (ISA)
Escalante Canyons (ISA)
Tract 1
Tract 2,3,4
Tract 5

Moab District

Dark Canyon Primitive Area (ISA)

The areas identified as Wilderness Study Areas (WSA's) will remain under management restrictions imposed by Section 603(c) of FLPMA. Those units or portions thereof dropped from further wilderness review will no longer be subject to those restrictions.

The final decisions on the following interstate units between Utah & Arizona will not be in effect until the protest period closes in Arizona. December 30, 1980. At that time the decisions as announced in the November 14, 1980, Federal Register, (vol. 45, No. 222) will become effective unless a formal protest is received.

UT-044-134/AZ-010-073 Quail Draw
UT-040-135/AZ-010-072 East Mesa
UT-040-137/AZ-010-069 Canaan Gap
UT-040-138/AZ-010-071 Cottonwood Canyon
UT-040-143/AZ-010-041 Canaan Mountain
UT-040-218/AZ-010-040 Bull Pasture
UT-040-219/AZ-010-027 Shinarump Cliffs
UT-040-223/AZ-010-026 Muggins Flat
UT-040-224/AZ-010-023 Pasture Canyon
UT-040-226/AZ-010-022 Buckskin Mountains
UT-040-274/AZ-010-021 Pine Hollow Canyon

If the BLM Utah State Director changes a decision on any inventory unit as a result of the protest as filed, any person adversely affected by the decision may appeal that individual unit decision to the Interior Board of Land Appeals (IBLA) by following normal administrative procedures outlined 43 CFR Part 4. If the individual unit decision on the protest remains the same as announced in the November 14, 1980, Federal Register, that decision will become effective immediately upon publication in the Federal Register.

FOR FURTHER INFORMATION CONTACT: Kent Biddulph, BLM Utah State Office, (801) 524-5326.

Dated: December 19, 1980.

Gary Wicks,

State Director.

[FR Doc. 80-40571 Filed 12-30-80; 8:45 am]

BILLING CODE 4310-84-M

Utah; Correction of Wilderness Inventory Decision on Devils Garden Instant Study Area

AGENCY: Bureau of Land Management, Interior.

ACTION: Notice of correction.

SUMMARY: The Federal Register notice published December 11, 1980 (Vol. 45, No. 240, page 81672) stated that "the restrictions imposed by Section 603 of the Federal Land Policy and Management Act are no longer in effect" on Devils Garden Instant Study Area. This should read: The restrictions imposed by Section 603 of the Federal Land Policy and Management Act will remain in effect until Congress acts upon a recommendation on wilderness suitability.

FOR FURTHER INFORMATION CONTACT: Kent Biddulph, Utah BLM State Office (801) 524-5326.

Dated: December 18, 1980.

Gary Wicks,

State Director.

[FR Doc. 80-40572 Filed 12-30-80; 8:45 am]

BILLING CODE 4310-84-M

National Park Service

Guadalupe Mountains National Park, Texas; Availability of Environmental Assessment, Master Plan Supplement

Pursuant ot the National Environmental Policy Act of 1969; the Council on Environmental Quality's Implementing Regulations, 40 CFR Parts 1500-1508; Section 401 of the Act of November 10, 1978, 92 Stat. 3489; 16 U.S.C. 1132 (Supplement II, 1978), the National Park Service has prepared an Environmental Assessment, Master Plan Supplement, for Guadalupe Mountains National Park, Culberson and Hudspeth Counties, Texas.

The Environmental Assessment sets forth and analyzes five alternatives for park boundary expansion, wilderness area expansion, and west side development for Guadalupe Mountains National Park. This document, along with public review comments, will be used by National Park Service managers in selecting an alternative, or combination of alternatives, that will be set forth in a general management plan supplement and wilderness study report. Also, this document will be used to determine whether the National Park Service will prepare an environmental impact statement for the proposals selected.

Copies of the Environmental Assessment, Master Plan Supplement, are available at the following locations:

Southwest Regional Office, National Park Service, 1100 Old Santa Fe Trail, Post Office Box 728, Santa Fe, New Mexico 97501

Guadalupe Mountains National Park, c/o Superintendent, Carlsbad Caverns/Guadalupe Mountains National Parks, 3225 National Parks Highway, Carlsbad, New Mexico 88220

An open house session will be held on January 14 between 1:30 and 3:30 p.m. at the park headquarters, which is located at the address provided above; and a public meeting will be held on January 15 at 7:00 p.m. at the Recreation Hall of the El Paso Natural Gas Company's facilities on U.S. Highway 62/180, located 68 miles west of Carlsbad, New Mexico, and 99 miles east of El Paso, Texas.

Anyone wishing to express an opinion on the Environmental Assessment, Master Plan Supplement, should attend either the open house session or the public meeting or send written comments to the Superintendent at the Carlsbad Caverns/Guadalupe Mountains National Parks address by February 15, 1981.

Dated: December 17, 1980.

Robert Kerr,

Regional Director, Southwest Region.

[FR Doc. 80-40601 Filed 12-30-80; 8:45 am]

BILLING CODE 4310-70-M

Statue of Liberty National Monument: General Management Planning

AGENCY: National Park Service, Interior.

ACTION: Notice of public meetings on general management planning for Statue of Liberty National Monument, New York/New Jersey.

SUMMARY: On December 22, 1980, Vol. 45, Page 84160, the National Park Service announced the availability of an Analysis of Alternatives (including Environmental Assessment) for public review and comment. The assessment is an initial step in the General Management Planning for Statue of Liberty National Monument, New York/New Jersey.

Now the Service is giving notice, as listed below, of a series of meetings to give the public further opportunity to comment on management alternatives and the Analysis/Assessment document.

DATES/TIMES/PLACES: Public meetings will be held in 1981 as follows:

January 20, 7:00 p.m.—Second Court Room, Borough Hall, Cadman Plaza, Brooklyn, New York

January 21, 7:00 p.m.—Council Chambers, City Hall, 280 Grove Street, Jersey City, New Jersey

January 22, 6:00 p.m.—First Floor Auditorium, Police Headquarters, One Police Plaza, Manhattan, New York

January 27, 5:30 p.m.—Room 213, Queens Borough Hall, 120-55 Queens Boulevard, Queens, New York

January 28, 7:00 p.m.—Newark Public Library, 5 Washington Street, Newark, New Jersey

January 29, 7:00 p.m.—Staten Island Borough Hall, Richmond Terrace, Staten Island, New York

ADDRESSES: A limited number of copies of the Analysis of Management Alternatives remain available upon request from the Superintendent, Statue of Liberty National Monument, Liberty Island, New York, New York 10004.

FOR FURTHER INFORMATION CONTACT: Mr. David Moffitt, Superintendent, Statue of Liberty National Monument, Liberty Island, New York, New York 10004 (212-964-3451).

SUPPLEMENTARY INFORMATION: Written comments on the Analysis/Assessment will be accepted until March 2, 1981. All written comments should be directed to Superintendent, Statue of Liberty National Monument, Liberty Island, New York, New York 10004.

Dated: December 18, 1980.

Richard L. Stanton,

Regional Director, North Atlantic Region.

[FR Doc. 80-40599 Filed 12-30-80; 8:45 am]

BILLING CODE 4310-70-M

Utility Corridor at Capitol Reef National Park

AGENCY: National Park Service, Interior.

ACTION: Selection of utility corridor.

SUMMARY: As directed by Pub. L. 92-207 (85 Stat. 740), the National Park Service has selected a corridor for granting rights-of-way and easements for utilities through the park. The corridor is approximately 4 miles in length and is located on North Coleman Bench in the park's South District. This corridor along with three other alternatives were considered in the Environmental Impact Statement for Capitol Reef National Park's Wilderness Recommendation prepared in 1974.

FOR FURTHER INFORMATION CONTACT: Mr. Derek O. Hambly, Superintendent, Capitol Reef National Park, Torrey, Utah 84775.

James B. Thompson,

Acting Regional Director, Rocky Mountain Region.

[FR Doc. 80-40600 Filed 12-30-80; 8:45 am]

BILLING CODE 4310-70-M

Office of the Secretary

5-Year Outer Continental Shelf Oil and Gas Leasing Program—Revision or Reapproval—Request for Comments

AGENCY: Office of Outer Continental Shelf (OCS) Program Coordination.

ACTION: Notice of request for comments on the possible revision or reapproval of the 5-year OCS Oil and Gas Leasing Program.

SUMMARY: Section 18 of the OCS Lands Act, as amended, requires the Secretary of the Interior to prepare, periodically revise and maintain an oil and gas leasing program. This request for information will be used to help determine whether a revision or reapproval of the final 5-Year OCS Oil and Gas Leasing Program approved in June 1980 would be appropriate and consistent with the purposes of the OCS Lands Act, as amended, and if so, what particular modifications would be desirable.

DATES: Comments and information must be received by February 2, 1981.

ADDRESS: Information should be submitted to Director, Office of OCS Program Coordination, Office of Assistant Secretary—Policy, Budget and Administration, Department of the Interior, Room 5150, 18th and C Streets, N.W., Washington, D.C. 20240. Envelopes or packets should be marked "Request for Comments on 5-Year OCS Oil and Gas Leasing Program."

FOR FURTHER INFORMATION CONTACT: Carolita Kallaur, Office of OCS Program Coordination, Department of the Interior, Room 5150, 18th and C Streets, N.W., Washington, D.C. 20240, telephone 202/343-9314, or Linda Gantt, same address, telephone 202/343-9311.

AUTHOR: Linda Gantt, Office of OCS Program Coordination, Department of the Interior, Room 5150, 18th and C Streets, N.W., Washington, D.C. 20240, telephone 202/343-9311.

SUPPLEMENTARY INFORMATION: Suggestions and information are requested from States, local governments, industry, other Federal agencies and all interested parties to assist the Department of the Interior in the possible revision or reapproval of the June 1980 5-year OCS Oil and Gas Leasing Program. The June 1980 leasing program consists of a schedule of proposed OCS oil and gas lease sales for the period June 1980 through June 1985. Based on the responses to this request and other information available to the Department of the Interior, a decision will be made whether a revision or reapproval of the program would be appropriate and consistent with the purposes of the OCS Lands Act, as amended, and if so, what particular modifications would be desirable.

The OCS Lands Act, as amended, states that any revision and reapproval of the 5-year program, except in the case of a revision which is not significant, shall be in the same manner as originally developed. A decision as to whether a proposed revision is significant within the terms of the statute can best be made when the outlines of the proposal are apparent. This will occur in the present case following receipt of responses to this request and a decision about whether to revise the program. If a decision to revise is made, the proposed revision will be evaluated to determine if it is significant. If it is, the proposal will become the draft proposed program envisaged by Section 18(c)(2) of the OCS Lands Act, as amended. If not, the proposal will be handled under the less extensive procedures used by the Department in approving leasing schedules prior to 1978. A determination on NEPA compliance for any schedule revision will be made at the same time as a determination of significance under Section 18.

The OCS leasing schedule enables the Federal Government, affected States, industry, and other interested parties to plan for their involvement in the steps leading to the consideration of lease sales. A decision on whether to proceed with specific sales on the schedule will be made only after all of the applicable requirements of the Outer Continental Shelf Lands Act, as amended, the National Environmental Policy Act, and other statutes have been met.

Oil and gas resources of the continental margin and subject to jurisdiction of the United States are to be considered for possible leasing. Precise marine boundaries between the United States and opposite or adjacent nations have not been determined in all cases. Accordingly, certain areas are or may be subject to negotiation or dispute. No decision has been made to undertake leasing in actual or potential disputed areas while efforts are being made to reach agreement with the nations concerned.

The areas to be commented on are as follows:

Longitude and Latitude Descriptions

Area and Approximate Location [1]

1. *North Atlantic:* North of 39° N. lat., east of 71° W. long.
2. *Mid-Atlantic:* Between approximately 36° 30' N. lat. (the line of latitude east of the Virginia-North Carolina border) and 39° N. lat. with that portion north of 39° N. lat. west of 71° W. long.
3. *South Atlantic:* South of 36° 30' N. lat.
4. *Gulf of Mexico:* South from Florida along 81° W. long. to approximately 25° N. lat., west to 82° W. long., south to 24° 30' N. lat., west to 83° W. long., south to 24° N. lat., and west to the Mexican border.
5. *Southern California:* South of 34° 30' N. lat. to the boundary with Mexico.
6. *Central and Northern California:* North of 34° 30' N. lat. to approximately 42° N. lat., the line of latitude west from the California-Oregon border.
7. *Washington-Oregon:* North of approximately 42° N. lat., the line of latitude west from the California-Oregon border.
8. *Cook Inlet:* Lower Cook Inlet from 60° 15' N. lat., south through Shelikof Strait to 57° N. lat.
9. *Gulf of Alaska:* North of 56° N. lat., east of 150° W. long.
10. *Kodiak:* Between 150° W. and 156° W. long.
11. *South Aleutian Shelf:* West of 156° W. long. and south of a line drawn through the Aleutian Island Chain.
12. *North Aleutian Shelf:* North of the Alaskan Peninsula and Unimak Island from 165° W. long. east to the Peninsula and south of 56° 30' N. lat.
13. *Bristol Basin:* East of 165° W. long. and north of 56° 30' N. lat.
14. *St. George Basin:* South of 58° N. lat., west of 165° W. long.
15. *Navarin Basin:* Between 58° and 63° N. lat., west of 165° W. long.
16. *Norton Basin:* Between 63° and 66° N. lat.
17. *Hope Basin:* Between 66° and 69° N. lat.
18. *Chukchi Sea:* North of 69° N. lat., west of 156° 30' W. long.
19. *Beaufort Sea:* East of 156° 30' W. long.

Maps of the 19 areas follow.

BILLING CODE 4310-10-M

[1] The Government of the United States is engaged in consultations and negotiations with governments of neighboring countries concerning the delimitation of areas subject to their respective jurisdictions. The Department of State published in the March 7, 1977, Federal Register at p. 12937, a notice of limits pursuant to the Fishery Conservation and Management Act of 1976.

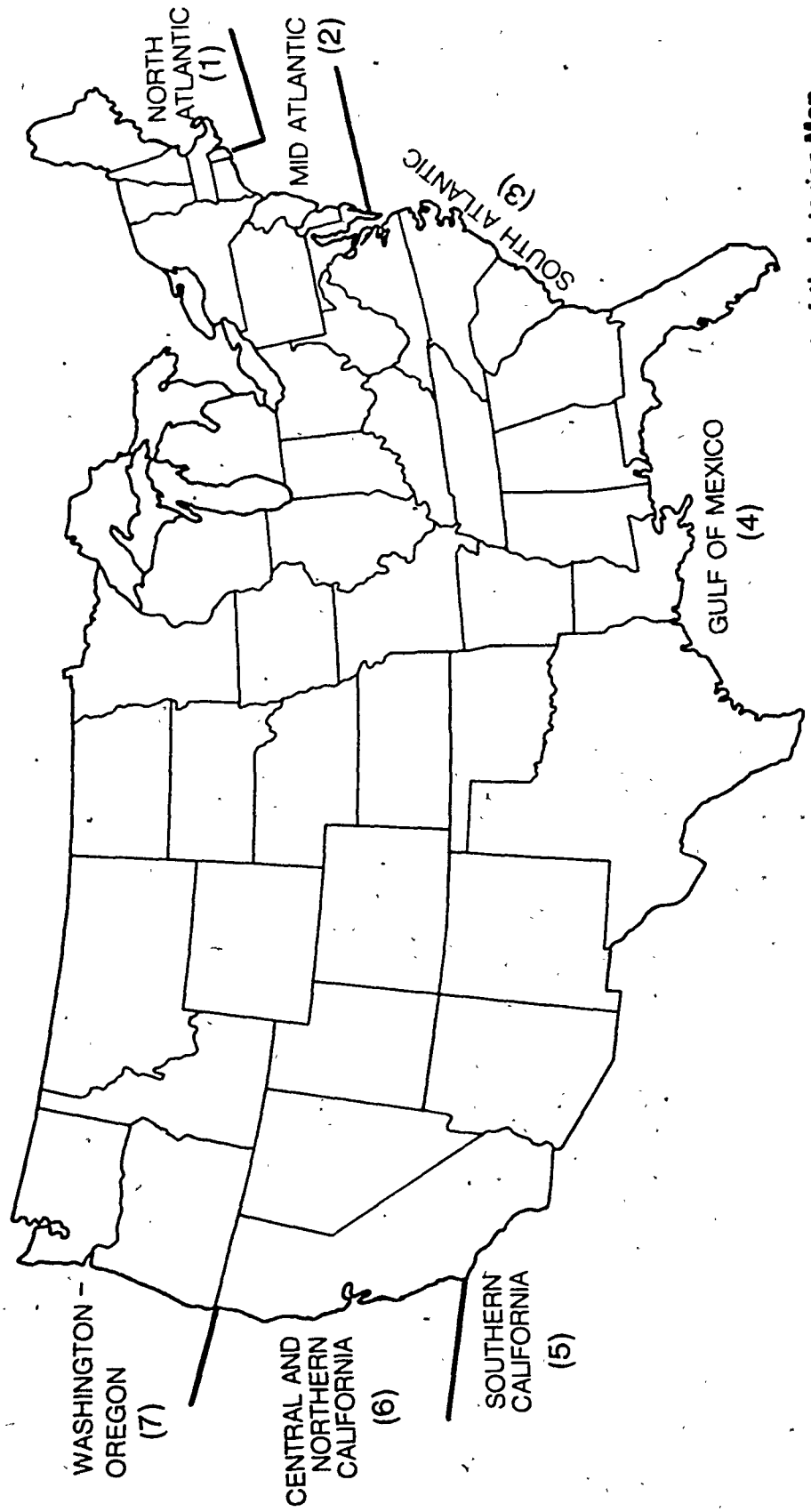

U.S. Department of the Interior Map

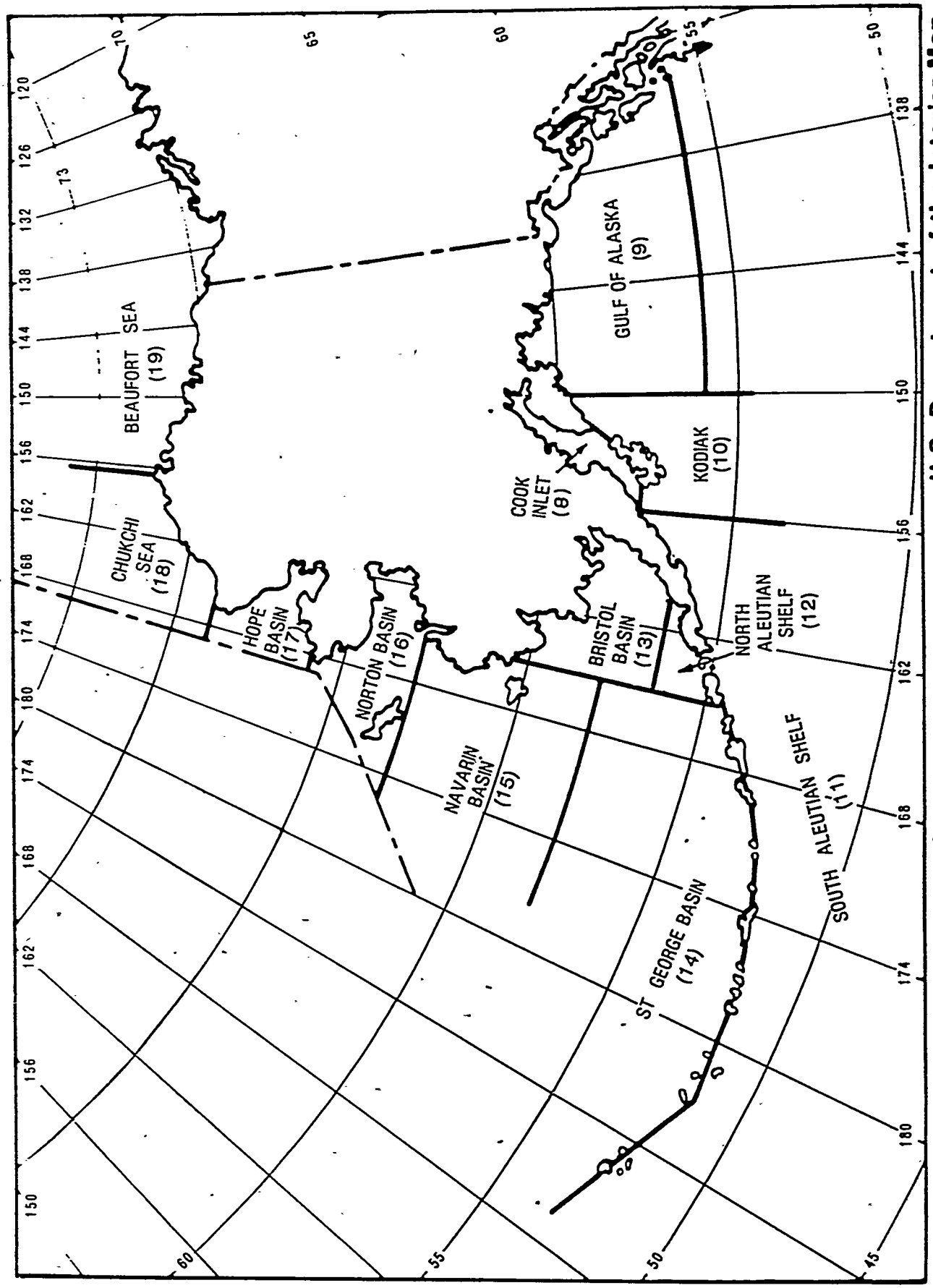

U.S. Department of the Interior Map

BILLING CODE 4310-10-C

Information and comments submitted during the preparation of the June 1980 program need not be resubmitted for the views to be reconsidered; if commenters believe any of this material is still relevant, they should cite it by reference. Information and comments submitted should be relevant and useful in determining the appropriate size, timing, and location of sales to be included in the planning schedule. As required by Section 18(c)(1) of the OCS Lands Act, as amended, any suggestions from the executive of any affected local government in an affected State shall be first submitted to the Governor of such State.

Information Requested

A. The following information is requested with respect to each area:

(1) Existing information concerning geographical, geological, and ecological characteristics.

(2) An equitable sharing of developmental benefits and environmental risks among the various regions.

(3) Other uses of the sea and seabed, including fisheries, navigation, existing or proposed sealanes, potential sites of deepwater ports, and other anticipated uses of the resources and space of the OCS.

(4) Relative environmental sensitivity and marine productivity of different areas of the OCS.

(5) Relevant environmental and predictive information.

(6) Technological feasibility of conducting exploration and development within specified time periods.

(7) Ranking by order of oil and gas potential.

(8) Ranking by order of interest in exploration and development, including reasons for any possible differences in this ranking compared to that in item (7).

(9) The location of such regions with respect to, and the relative needs of regional and national energy markets.

(10) Availability of transportation networks to bring oil and gas supplies to demand areas, both on a current and projected basis.

B. Suggestions are also requested for possible revisions in the boundaries of the 19 areas described earlier in this notice, with reasons for any such revisions.

Dated: December 23, 1980.

Carolita Kallaur,

Acting Director, Office of OCS Program Coordination.

[FR Doc. 80-40566 Filed 12-30-80; 8:45 am]

BILLING CODE 4310-10-M

National Environmental Policy Act; Implementing Procedures

AGENCY: Department of the Interior.

ACTION: Notice of final procedures for the Lowell Historic Preservation Commission.

SUMMARY: This notice announces final NEPA implementing procedures for the Lowell Historic Preservation Commission, a component of the Department of the Interior. The Departmental procedures were published in the Federal Register on April 23, 1980 (45 FR 27541).

DATE: The procedures were adopted.

FOR FURTHER INFORMATION CONTACT: Bruce Blanchard, Director, Office of Environmental Project Review, Office of the Secretary, Washington, D.C. 20240. Telephone: (202) 343-3891. FTS: 343-3891. For Lowell Historic Preservation Commission, contact Nancy Bellows, Telephone: (617) 458-7653. FTS: 223-0766.

SUPPLEMENTARY INFORMATION: These implementing procedures were proposed in the Federal Register on August 28, 1980 (45 FR 57556), and no comments were received. They provide more specific NEPA compliance guidance to the Lowell Historic Preservation Commission, and were prepared in consultation with the Office of Environmental Project Review in accordance with 516 DM 6.5(C). They should be read in conjunction with the Departmental procedures (516 DM 1-6) which are published in the Federal Register on April 23, 1980, and with the regulations of the Council on Environmental Quality (40 CFR Parts 1500-1508). Copies of these procedures are also available for inspection at the Commission's offices at 204 Middle Street, Lowell, MA 01825.

Dated: December 22, 1980.

James H. Rathlesberger,

Special Assistant to Assistant Secretary of the Interior.

Lowell Historic Preservation Commission

1. *NEPA Responsibility*

A. *Chairman* is responsible for NEPA compliance for Lowell Historic Preservation Commission (the Commission) activities.

B. *Executive Director* is responsible for insuring that the Commission staff activities and recommendations are conducted in accordance with the requirements and the spirit of NEPA.

C. *Planning Director* (1) Is responsible for coordination and oversight of the NEPA process. Information about Commission NEPA documents or the NEPA process can be obtained by contacting the Planning Director at the Commission office.

(2) Is responsible for integrating the NEPA process into the Commission's activities and will insure that environmental concerns, as covered in environmental documents, are addressed when the Commission carries out its preservation and cultural activities.

2. *Guidance to Applicants.* A. Actions that are initiated by private or non-Federal entities through applications include: Grants for private residential and commercial facade rehabilitation; grants for cultural programs; loans to private firms for facade improvement programs; emergency grants or loans for facade stabilization.

B. Applicants are required to complete an application form which includes a checklist of environmental impacts that may result from the work; they will be informed by the Commission staff as to what environmental information is needed when they initiate their application. The Commission staff, using this information, will advise applicants whether further environmental documentation is required.

C. A Grant Application Package is available on request from the Commission office, 204 Middle Street, Lowell, MA 01852.

3. *Major Actions Normally Requiring an EIS.* There are no categories of actions where an EIS will normally be prepared.

4. *Categorical Exclusions.* In addition to the actions listed in the Departmental categorical exclusions outlined in Appendix I of 516 DM 2, many of which the Commission also performs; the following Commission actions are designated categorical exclusions unless the actions qualify as an exception under 516 DM 2.3A(3):

A. *Operating Activities.* (1) Professional services, including such things as architectural plans, studies, maps, renderings, and photographs; engineering studies; apprisals; graphic design; and building inventories and surveys.

(2) Identifying the eligibility for and nominating properties for the National Register of Historic Places and the National Historic Landmark and National Natural Landmark programs.

B. *Development Activities.* (1) Minor revisions in the boundaries of the Preservation District recommended pursuant to Section 101(2)(b) of Pub. L. 95-290.

(2) Grants to private property owners on a matching basis for the rehabilitation of building facades: *Provided,* That this rehabilitation does

not adversely alter the integrity of the setting or increase public use of the area to the extent of compromising the nature and character of the property or cause a nuisance to adjacent property owners or occupants. This includes the case where the owner intends to change the use of the building.

(3) Matching grants to private property owners for construction or rehabilitation work on existing non-Federal properties which are required to meet health, safety, and handicapped regulations.

(4) Grants for construction, addition, expansion of new non-residential facilities: *Provided*, That the new facilities will not increase public use of the area to the extent of compromising the nature and character of the property or causing physical damage to it; institute noncompatible uses which might compromise the nature and characteristics of the property or cause physical damage to it; or cause a nuisance to adjacent property owners or occupants.

(5) Leasing or disposition or any interagency transfer or use of rail right-of-way for continued rail-related uses.

(6) Operation of a trolley system for resident and visitor use utilizing existing rights-of-way and tracks.

(7) Long and short term leasing of office, display, or other space from public or private owners.

(8) Acquisition or disposition of interests in real property, including but not limited to leaseholds, easements, rights-of-way, or fee interests.

(9) Cultural programs, including such things as outdoor summer theater programs; art exhibits, demonstrations, and feasibility studies.

[FR Doc. 80-40569 Filed 12-30-80; 8:45 am]
BILLING CODE 4310-KB-M

INTERNATIONAL TRADE COMMISSION

[Investigation No. 337-TA-76]

Certain Food Slicers and Components Thereof; Commission Request for Comments Regarding Licensing Agreement

AGENCY: United States International Trade Commission.

ACTION: Request for comments from the public regarding licensing agreement.

SUMMARY: The Commission is presently considering whether to terminate Investigation 337-TA-76 as to respondent Crest Industries Corp. on the basis of a licensing agreement entered into by complainant Prodyne Enterprises, Inc. and Crest. Termination of Crest would not end the investigation as three other respondents would remain. This notice requests comments from the public on the licensing agreement on or before January 30, 1981.

SUPPLEMENTARY INFORMATION: This investigation, pursuant to section 337 of the Tariff Act of 1930 (19 U.S.C. 1337), concerns alleged unfair acts in the importation and sale in the United States of certain food slicers. The unfair act specifically complained of is the infringment of claims of U.S. Letters Patent 3,766,817.

The Commission instituted this investigation on December 4, 1980 and published notice thereof in the Federal Register on December 21, 1979 (44 FR 75738). The notice named E. Mishan and Sons, Albert E. Price, Inc., Crest Industries Corp., and Taiwan Timing Trading Co. as respondents.

On August 1, 1980 complainant Prodyne Enterprises, Inc., and respondent Crest Industries Corp. entered into a licensing agreement. Pursuant to the agreement, Prodyne agreed to grant Crest a license to practice the invention covered by U.S. Letters Patent 3,766,817, and to permit Crest to import up to 10,000 food slicing devices covered by the patent per year. The license is royalty free. In return, Crest agreed to withdraw from the active defense of Investigation No. 337-TA-76.

On September 10, 1980, Prodyne and the Commission investigative attorney submitted a joint motion for summary determination against Crest and two other respondents. The Commission has determined to deny the motion for summary determination as to all three respondents.

The Commission is presently considering whether to terminate the investigation as to Crest on the basis of the licensing agreement entered into by Crest and Prodyne.

Written Comments Requested

There will be no oral argument regarding the proposed termination of the investigation as to Crest. However, in order to discharge its statutory obligation to consider the public interest, the Commission seeks written comments from interested persons regarding the effects of terminating the investigation as to Crest on (1) the public health and welfare, (2) competitive conditions in the U.S. economy, (3) the production of like or directly competitive articles in the United States, and (4) U.S. consumers. All written comments must be filed with the Secretary to the Commission no later than January 30, 1981. In addition, pursuant to 19 CFR 210.14(a)(2), the Commission has requested comments from the Department of Health and Human Services, the Department of Justice, the Federal Trade Commission, and the U.S. Customs Service on the effects of the proposed settlement agreement.

The Licensing Agreement

A copy of the Prodyne/Crest licensing agreement follows this notice.

Additional Information

The original and 19 true copies of all written submissions must be filed with the Secretary to the Commission, 701 E Street NW, Washington, D.C. 20436; telephone (202) 523-0161. All comments must be filed no later than January 30, 1981. Any person desiring to submit a document (or portion thereof) to the Commission in confidence must request *in camera* treatment. Such requests should be directed to the Secretary of the Commission and must include a full statement of the reasons why the Commission should grant such treatment. The Commission will either accept the submission in confidence or return it. All nonconfidential written submissions will be available for public inspection in the Office of the Secretary.

FOR FURTHER INFORMATION CONTACT: Warren H. Maruyama, Esq., Office of the General Counsel, U.S. International Trade Commission, 701 E Street NW, Washington, D.C. 204436; telephone (202) 523-0143.

By order of the Commission.

Issued: December 22, 1980.

Kenneth R. Mason,

Secretary.

License Agreement

Agreement made as of August 1, 1980 by and between Prodyne Enterprises Inc., a corporation organized under the laws of the State of California and having its principal office at P.O. Box 212, Monclair, California 91763 (hereinafter called Prodyne) and Crest Industries Corp., a corporation organized under the laws of State of New York and having a principal office at 593 Acorn Street, Deer Park, New York 11729 (hereinafter called Crest).

Whereas, Prodyne is the owner of and has the right to grant licenses under United States Letters Patent No. 3,766,817, issued on October 23, 1973 (hereinafter called Patent Right);

Whereas, an investigation no. 337-TA-76 by the United States International Trade Commission, Washington, D.C., directed at the importation of certain food slicers and components thereof, initiated upon a complaint by Prodyne and involving as one of the Responsents, Crest; and

Whereas, the parties desire to resolve the conflict in the International Trade Commission and it is agreed that Crest will

withdraw from active defense of this investigation upon the taking of a license upon the terms and conditions hereinafter set forth;

Now, therefore, in consideration of the premises and the performance of the covenants herein contained, it is agreed;

1. Prodyne warrants that it is the owner of the entire right, title and interest in and to the Patent Right and has a right to grant the within license.

2. Prodyne grants to Crest and Crest hereby accepts from Prodyne upon the terms and conditions hereinafter specified a non-exclusive and non-assignable license to practice the invention covered by the Patent Right in the United States in the manufacture, importation, use and sale of cheese slicing devices to the full end of the term for which the Patent Right is issued, unless sooner terminated as hereinafter provided.

3. The license shall be royalty free and no payment of any kind need be made by Crest to Prodyne with respect to the granting of this license.

4. Crest shall be entitled to import within the terms of the license granted up to 10,000 cheese slicing devices covered by the Patent Right per year. Prodyne shall give authorization to allow such importation by Crest when requested to do so by Crest.

5. Crest shall keep accurate books of account containing the quantity of cheese slicers covered by the Patent Right imported per year. Said books shall be kept by Crest at its usual places where its like books are kept and shall be open at all reasonable times for one year following the end of the calendar year to which they pertain, to the inspection by an independent certified public accountant to whom Crest shall have no reasonable objection, retained by Prodyne for the purpose of verifying Crest's importation of said cheese slicers per year.

6. This constitutes the entire agreement between the parties with respect to the subject matter hereunder and supersedes all previous communications, representations and agreements, either oral or written between the parties.

7. All notices shall be made by certified or registered mail addressed as first noted above unless written notification to the contrary shall be given.

8. This agreement shall be binding upon the successors or assigns of the parties hereto.

In witness whereof, the parties hereto have duly executed this agreement in duplicate as of the day and year first written above.

Dated: August 27, 1980.

Prodyne Enterprises, Inc.

Christopher J. McArdle,

Vice President.

Crest Industries Corp.

Herbert Adler,

President.

[FR Doc. 80-40679 Filed 12-30-80; 8:45 am]

BILLING CODE 7020-02-M

[Investigation No. 337-TA-94]

Certain Wet Motor Circulating Pumps and Components Thereof; Investigation

AGENCY: U.S. International Trade Commission.

ACTION: Institution of an investigation pursuant to 19 U.S.C. 1337.

SUMMARY: Notice is hereby given that a complaint was filed with the U.S. International Trade Commission on November 20, 1980, under section 337 of the Tariff Act of 1930 (19 U.S.C. 1337), on behalf of Taco, Inc., 1160 Cranston Street, Cranston, R.I. 20920. The complaint was amended on November 21 and December 2, 1980. The amended complaint (hereinafter referred to as the complaint) alleges unfair methods of compensation and unfair acts in the importation into the United States of certain wet motor circulating pumps and components thereof, or in their sale, because of the alleged infringement by such wet motor circulating pumps and components thereof of at least claims 1, 2, 3, 6, 8, 15, 19, and 20 of U.S. Letters Patent 3,264,653 and the alleged misappropriation of Taco's trade secrets. The complaint further alleges that the effect or tendency of such unfair methods of competition and unfair acts is to substantially injure an industry, efficiently and economically operated, in the United States.

The complaint requests the Commission to institute an investigation; during the investigation, to issue a temporary exclusion order on an expedited basis prohibiting importation of the articles in question into the United States, except under bond, and to issue a temporary cease and desist order on an expedited basis forbidding Mr. Curtis V. Givan from disclosing or disseminating Taco's trade secrets; and, after the full investigation, to issue an order permanently excluding the articles in question from entry into the United States and to issue a cease and desist order permanently forbidding Curtis V. Givan from disclosing or disseminating Taco's trade secrets.

Authority

The authority for institution of this investigation is contained in section 337 of the Tariff Act of 1930 (19 U.S.C. 1337) and in section 210.12 of the Commission's Rules of Practice and Procedure (19 CFR 210.12).

Scope of the Investigation

Having considered the complaint, the U.S. International Trade Commission, on December 18, 1980, ordered that—

1. Pursuant to subsection (b) of section 337 of the Tariff Act of 1930 (19 U.S.C. 1337(b)), an investigation be instituted to determine whether there is reason to believe there is a violation and whether there is a violation of subsection (a) of section 337 in the unlawful importation of certain wet motor circulation pumps and components thereof into the United States, or in their sale, because of the alleged infringement by such wet motor circulating pumps and components thereof of claims 1, 2, 3, 6, 8, 15, 19, and 20 of U.S. Letters Patent 3,264,653 and the alleged misappropriation of Taco's trade secrets, the effect or tendency of which is to substantially injure an industry, efficiently and economically operated, in the United States.

(2) For the purpose of this investigation so instituted the following are hereby named as parties upon which is notice of investigation shall be served:

(a) The complainant is—Taco, Inc., 1160 Cranston Street, Cranston, R.I. 20920.

(b) The respondents are the following persons alleged to be in violation of section 337 upon whom the complaint is to be served:

Grundfos Pumps Corp., 2555 Clovis Avenue, Clovis, Calif. 93612

Grundfos A.S., Bjerringbro, Denmark

Curtis V. Givan, 2555 Clovis Avenue, Clovis, Calif. 93612

(c) The Commission investigative attorney, a party to this investigation, is—Robert M. M. Seto, Unfair Import Investigation Division, U.S. International Trade Commission, 701 E Street NW., Washington, D.C. 20436; and

(3) For the investigation so instituted, Donald K. Duvall, Chief Administrative Law Judge, U.S. International Trade Commission, 701 E Street NW., Washington, D.C. 20436, shall designate the presiding officer.

SUPPLEMENTARY INFORMATION: Curtis V. Givan has been named a party respondent in this investigation because the allegatons of the complaint warrant his inclusion.

With respect to complainant's request for expedition of the temporary relief hearing, action on such request is deferrred to the presiding officer.

Repsonses must be submitted by the named respondents in accordance with § 210.21 of the Commission's Rules of Practice and Procedure (19 CFR 210.21). Pursuant to §§ 201.16(d) and 210.21(b) of the rules, such responses will be considered by the Commission if received not later than twenty (20) days after the date of service of the complaint. Extensions of time for submitting a response will not be granted unless good and sufficient cause therefor is shown.

Failure of respondent to file a timely response to each allegation in the complaint and in this notice may be deemed to constitute a waiver of the right to appear and contest the allegations of the complaint and this notice, and to authorize the presiding officer and the Commission, without further notice to the respondent, to find the facts to be as alleged in the complaint and this notice and to enter both a recommended determination and a final determination containing such findings.

The complaint, except for any confidential information contained therein, is available for inspection during official working hours (8:45 a.m. to 5:15 p.m.) in the Office of the Secretary, U.S. International Trade Commission, 701 E Street NW., Washington, D.C. 20436, telephone 202-523-0161.

FOR FURTHER INFORMATION CONTACT: Robert M. M. Seto, Esq., Commission Investigative Attorney, Unfair Import Investigations Division, U.S. Interantional Trade Commission, telephone 202-523-0419.

By order of the Commission.

Issued: December 23, 1980.

Kenneth R. Mason,

Secretary.

[FR Doc. 80-40680 Filed 12-30-80; 8:45 am]

BILLING CODE 7020-02-M

INTERSTATE COMMERCE COMMISSION

Motor Carrier Temporary Authority Application

Important Notice: The following are notices of filing of applications for temporary authority under Section 10928 of the Interstate Commerce Act and in accordance with the provisions of 49 CFR 1131.3. These rules provide that an original and two (2) copies of protests to an application may be filed with the Regional Office named in the Federal Register publication no later than the 15th calendar day after the date the notice of the filing of the application is published in the Federal Register. One copy of the protest must be served on the applicant, or its authorized representative, if any, and the protestant must certify that such service has been made. The protest must identify the operating authority upon which it is predicated, specifying the "MC" docket and "Sub" number and quoting the particular portion of authority upon which it relies. Also, the protestant shall specify the service it can and will provide and the amount and type of equipment it will make available for use in connection with the service contemplated by the TA application. The weight accorded a protest shall be governed by the completeness and pertinence of the protestant's information.

Except as otherwise specifically noted, each applicant states that there will be no significant effect on the quality of the human environment resulting from approval of its application.

A copy of the application is on file, and can be examined at the ICC Regional Office to which protests are to be transmitted.

Note.—All applications seek authority to operate as a common carrier over irregular routes except as otherwise noted.

Motor Carriers of Property

Notice No. F-82

THE FOLLOWING APPLICATIONS WERE FILED IN REGION 2. SEND PROTESTS TO: ICC, FEDERAL RESERVE BANK BLDG., 101 N. 7TH ST., ROOM 620, PHILADELPHIA, PA 19106.

MC 146676 (Sub-II-6TA), filed December 8, 1980. Applicant: BURKS TRUCKING, INC., P.O. Box 37, Old Fort, OH 44861. Representative: E. H. van Deusen, P.O. Box 97, 220 W. Bridge St., Dublin, OH 43017. *Stereo speaker systems and components thereof, and vinyl covered board* between Chicago and Winslow, IL, on the one hand, and, on the other, points in IN, MI, MN, MO, NY, OH, and WI, for 270 days. Supporting shippers: Matrecs Electronics, Inc., 805 Woodman Ave., Winslow, IL 61089; American Case Co., Inc., 629 W. Cermak Rd., Chicago, IL 60616.

MC 153057 (Sub-II-1TA), filed December 9, 1980. Applicant: WAGONER TRUCKING, 945 Safin Rd., Columbus, OH 43204. Representative: E. L. Wagoner, 2017 Hythe Rd., Upper Arlington, OH. *Contract: Regular: Machinery and equippment requiring special equipment,* from points in IL, IO, MO, WI, and IN to points in KY, MI, OH, WV, PA and NY, for 270 days. Supporting Shippers: Rojac Waste Equipment, Inc., 513 Broad St., Rochester, NY 14608; Road Machinery Sales, Inc., 33620 Pin Oak Parkway, Avon Lake, OH 44012; Wagoner Machinery, Inc., 945 Safin Rd., Columbus, OH 43204.

MC 150522 (Sub-II-6TA), filed December 1, 1980. Applicant: VIRGINIAN ELECTRIC COMPANY, a corporation, d.b.a. VIRGINIAN POWER TRANSPORT, 530 29th St., Parkersburg, WV 26101. Representative: John M. Friedman, 2930 Putnam Ave., Hurricane, WV 25526. *Contract Carrier, General commodities,* except household goods and class A and B explosives, between points in IL, IN, KY, MD, MI, NY, OH, PA, and WV for 270 days, under contract with CGM Contractors. Supporting Shipper: CGM Contractors, P.O. Box 550, Vienna, WV 26101.

MC 150511 (Sub-II-5TA), filed November 28, 1980. Applicant: BETTER HOME DELIVERIES, INC., 3700 Park East Dr., Cleveland, OH 44122. Representative: J. A. Kundtz, 1100 National City Bank Bldg., Cleveland, OH 44114. *Contract carrier,* irregular routes, transporting: *Such merchandise as is dealt in by retail department stores, and equipment, materials and supplies used in the conduct of such business,* between Savage, MD and Washington, DC, on the one hand, and, on the other, points in DE, MD, NC, NJ, NY, PA, SC, VA and WV, under continuing contract(s) with Hecht's Division of May Department Stores, for 270 days. Supporting Shipper: Hecht's May Department Stores, 7th and F Street, NW, Washington, DC 20004.

MC 123255 (Sub-II6TA), filed November 28,, 1980. Applicant: B & L MOTOR FREIGHT, INC., 1984 Coffman Rd., Newark, Ohio 43055. Representative: C. F. Schnee Jr., 1984 Coffman Rd., Newark, Ohio 43055. *Cabinets, Television* between Chicago, Illinois and Evansville, Indiana, for 270 days. An underlying ETA seeks 120 days authority. Supporting Shipper: Zenith Radio Corporation, 1900 North Austin Ave., Chicago, IL 60639.

MC 142559 (Sub-II-21TA), filed November 28, 1980. Applicant: BROOKS TRANSPORTATION, INC., 3830 Kelley Avenue, Cleveland, OH 44114. Representative: David A. Turano, 100 E. Broad St., Columbus, OH 43215. *Such commodities as are dealt in by manufacturers and distributors of filters* (except commodities in bulk) between Vance County, NC, on the one hand, and, on the other, pts. in the US (except AK and HI) for 270 days. Supporting shipper: Facet Enterprise, Inc., P.O. Box 1637, Henderson, NC 27536.

MC 61977 (Sub-II-6TA), filed November 28, 1980. Applicant: ZERKLE TRUCKING CO., 2400 Eighth Ave., P.O. Box 5628, Huntington, WV 25703. Representative: N. W. Bowen, Jr. (same address as applicant). *Building and Excavating Contractor's Machinery, Equipment and Supplies; Agricultural Implements—Farm Tractors, Parts, Attachments and Accessories,* between Kananha County, WV, and Franklin County, OH. Restricted to traffic originating at or destined to facilities used by Discount Parts Co., Inc., Kubota Tractors, Charleston, WV. Supporting

shipper: Discount Parts Co., Inc., Kubota Tractors, P.O. Box 2588, Charleston, WV 25329.

MC 123540 (Sub-II-2TA), filed December 2, 1980. Applicant: WERLIN CORPORATION, 3415 Southside Ave., Cincinnati, OH 45204. Representative: Paul F. Beery, 275 E. State St., Columbus, OH 43215. *Contract,* Irregular: *Caustic soda, in bulk, in tank vehicles,* from Cincinnati, OH to points in IN, KY, WV, and IL, for 270 days. An underlying ETA seeks 120 days authority. Supporting shipper: Stauffer Chemical Co., Nyala Farms Rd., Westport, CT 06880.

MC 139395 (Sub-II-1TA), filed December 3, 1980. Applicant: BULK TRANSIT CORPORATION, 7177 Industrial Parkway, Plain City, OH 43064. Representative: Paul F. Beery, 275 East State St., Columbus, OH 43215. *Alka-Ment, in bulk, in tank vehicles* from Knoxville, TN to pts. and places in Upshur, Monongalia and Marion Counties in WV, for 270 days. An underlying ETA seeks 120 days authority. Supporting shipper: Allyn Corporation, Box 527, Worthington, OH 43085.

MC 117613 (Sub-II-5TA), filed November 28, 1980. Applicant: D. M. BOWMAN, INC., Rt. 2, Box 43A1, Williamsport, MD 21795. Representative: Edward N. Button, 580 Northern Ave., Hagerstown, MD 21740. *General commodities,* between Baltimore City, MD, Alexandria, VA, Washington County, MD, and IL, on the one hand, and, on the other, points in DE, MD, PA, VA, WV & DC, under a continuing contract with Fort Pitt Consolidating, Inc., for 270 days. An underlying ETA seeks 120 days authority. Supporting shipper: Fort Pitt Consolidating, Inc., 5008 Erbs Bridge Rd., Mechanicsburg, PA 17055.

MC 63836 (Sub-II-3TA), filed November 24, 1980. Applicant: BOLUS MOTOR LINES, INC., 700 N. Keyser Ave., Scranton, PA 18508. Representative: Joseph A. Keating, Jr., 121 S. Main St., Scranton, PA 18517. *Bicarbonate of soda, Washing Compounds, Cleaning Compounds and Scouring Compounds,* from Onondaga Cty, NY, to points in that part of the US on and East of a line beginning at the mouth of the Mississippi River and extending along the Mississippi River to its junction along the western boundary of Itasca Cty, MN, thence northward along the western boundaries of Itasca and Koochiching Counties, MN to the US-Canada boundary line, for 270 days. An underlying ETA seeks 120 days authority. Supporting shipper: Church & Dwight Co., P.O Box 369, Piscataway, NJ 08854.

MC 63838 (Sub-II-4TA), filed November 26, 1980. Applicant: BOLUS MOTOR LINES, INC., 700 N. Keyser Ave., Scranton, PA 18508. Representative: Joseph A. Keating, Jr., 121 S. Main St., Taylor, PA 18517. *Candy and confectionery,* From Hackettstown, NJ to PA, NY, CT, MA, RI, MI & OH, for 270 days. An underlying ETA seeks 120 days authority. Supporting shipper: M & M Mars, Div. of Mars, Inc., High St., Hackettstown, NJ.

MC 150776 (Sub-II-2TA), filed December 11, 1980. Applicant: ALFRED DANIELS, INC., Rt. 1, P.O. Box 272-I, Jackson, OH 45640. Representative: Stephen J. Habash, 100 E. Broad St., Columbus, OH 43215. *Contract; irregular: building materials* from Ft. Wayne, IN to San Fernando and Santa Fe Springs, CA, Dallas, TX and Atlanta, GA under contracts with Stonhard, Inc. for 270 days. Supporting shipper: Stonhard, Inc., Rt. 73 & Park Ave., Maple Shade, NJ 08052.

MC 113666 (Sub-II-14TA), filed December 11, 1980. Applicant FREEPORT TRANSPORT, INC., P.O. Drawer A, Freeport, PA 16229. Representative: R. Scott Mahood (same address as applicant). *Calcium Carbide,* in bulk, in tank vehicles from Ashtabula, OH to ports of entry on the International Boundary Line between the U.S. and Canada located at Niagara Falls, NY, for 270 days. Supporting shipper: Cyanamid Canada, Inc., 2255 Sheppard Ave., E., Willowdale, Ontario, M2J 4Y5.

MC 72069 (Sub-II-10TA), filed December 11, 1980. Aplicant: BLUE HEN LINES, INC., P.O. Box 280, Milford, DE 19963. Representative: R. Emery Clark, 366 Executive Bldg., 1030 15th St., NW, Washington, DC 20005. *Foodstuffs and materials, equipment and supplies* used in the manufacture and distribution thereof, between Clifton, NJ, on the one hand, and on the other, points in the U.S. for 270 days. An underlying ETA seeks 120 days authority. Restriction: Restricted to traffic originating at or destined to the Globe Products Company, Inc. Supporting shipper: Globe Products Company, Inc., 55 Webro Rd., Clifton, NJ 07012.

MC 488 (Sub-II-5TA), filed December 9, 1980. Applicant: BREMAN'S EXPRESS CO., 318 Haymaker Rd., Monroeville, PA 15146. Representative: Leslie S. Breman, Executive Vice President, Breman's Express Co., 318 Haymaker Rd., Monroeville, PA 15146. Authority sought to operate as a *common carrier,* by motor vehicle over *irregular routes,* transporting: *General commodities* (except those of unusual value, Classes A and B explosives, household goods as defined by the Commission, commodities in bulk, and those requiring special equipment), between Pittsburgh, PA, on the one hand, and, on the other, points in Armstrong, Beaver, Butler, Cameron, Clearfield, Elk, Fayette, Greene, Indiana, Jefferson, Lawrence, Washington, and Westmoreland Counties, PA, for 270 days. Applicant intends to interline with present connecting carriers at authorized points. Supporting shipper: The Sherwin-Williams Co., 1400 Valley Belt Rd., Brooklyn Hts., OH 44131.

MC 153069 (Sub-II-1TA), filed December 10, 1980. Applicant: ROBERT HODGE, d.b.a. B & H TRUCKING, 5022 Sullivant Ave., Columbus, OH 43228. Representative: E. H. van Deusen, P.O. Box 97, 220 W. Bridge St., Dublin, OH 43017. *Waste Sludge, in dump vehicles,* from Hilliard, OH to points in Wayne County, MI, for 270 days. An underlying ETA seeks 120 authority. Supporting shipper: Systech Liquid Treatment Corp., 245 N. Valley Rd., Xenia, OH 45385.

MC 123744 (Sub-II-14TA), filed December 10, 1980. Applicant: BUTLER TRUCKING CO., P.O. Box 88, Woodland, PA 16881. Representative: Dwight L. Koerber, Jr., P.O. Box 1320, 110 N. 2nd St., Clearfield, PA 16830. *Iron and steel articles,* between pts. in the US in and east of ND, SD, NB, KS, OK, and TX, restricted to traffic moving for the account of Metal Purchasing Co., Inc., for 270 days. An underlying ETA seeks 120 days authority. Supporting shipper: Metal Purchasing Co., Inc., 501-551 West 30th St., New York, NY 10001.

MC 144434 (Sub-II-2TA), filed December 11, 1980. Applicant: APOLLO TRUCKING, INC., P.O. Box 356, 2712 Bertwynn Dr., Dayton, OH 45439. Representative: James Duvall, P.O. Box 97, 220 W. Bridge St., Dublin, OH 43017. *Coal* from points in Breathitt, Knott, Knox, Laurel, Lee, Leslie, Letcher, Owsley, Perry, Whitley and Wolfe Counties, KY, to points in Montgomery County, OH, for 270 days. An underlying ETA seeks 120 days authority. Supporting shipper: Regent Energy Corporation, 1025 Dove Run Rd., Lexington, KY 40502.

MC 146820 (Sub-II-7TA), filed December 11, 1980. Applicant: B & G TRUCKING, INC., P.O. Box 581, Worthington, OH 43085. Representative: David A. Turano, 100 E. Broad St., Columbus, OH 43215. *Contract: Irregular: General commodities (except household goods as defined by the Commission, Classes A and B explosives, and commodities in bulk)* between points in and east MN, IO, MO, KA, OK, and TX for the account of Swan Hose Division, Amerace Corporation, for 270 days. Restricted to traffic

originating at or destined to the facilities of Swan Hose Division, Amerace Corporation. Supporting shipper: Swan Hose Division, Amerace Corporation, 8929 Columbus Pike, P.O. Box 509, Worthington, OH 43085.

MC 21866 (Sub-2-37TA), filed December 11, 1980. Applicant: WEST MOTOR FREIGHT, INC., 740 S. Reading Ave., Boyertown, PA 19512. Representative: Alan Kahn, 1430 Land Title Bldg., Philadelphia, PA 19110. *Athletic equipment, toys and games,* from the facilities of Eagle Rubber Company, Inc. at Ashland, OH to Philadelphia, PA and Bayonne, Edison, Jersey City and Secaucus, NJ, for 270 days. Supporting shipper: Eagle Rubber Company, Inc., 710 Orange Street, Ashland, OH 44805.

MC 151707 (Sub-II-5TA), filed December 11, 1980. Applicant: PIONEER TRUCKING, INC., 1105 N. Market St., 15th Floor, Wilmington, DE 19801. Representative: Dennis Kupchik (same address as applicant). *Copper Products and materials used in the manufacture thereof* between points in CT, DE, DC, MD, MA, NH, NJ, NY, PA, and RI for 270 days under continuing contract(s) with Phelps Dodge Copper Products Co. Supporting shipper: Phelps Dodge Copper Products Co., 300 Park Ave., New York, NY 10022.

MC 150339 (Sub-2-25TA), filed December 12, 1980. Applicant: PIONEER TRANSPORTATION SYSTEMS, INC., 151 Easton Blvd., Preston, MD 21655. Representative: J. Cody Quinton, Jr. (same as applicant). *Contract; irregular; Mechanical and diffusion pump fluids, in packages and in bulk,* (1) from Churchville, NY, to points in TX and CA; and (2) from Norfolk, VA, Baltimore, MD, Wilmington, DE, Philadelphia, PA and New York, NY, Churchville, NY, under a continuing contract(s) with Inland Vacuum Industries, Inc., 35 Howard Ave., Churchville, NY 14428. Supporting shipper: Inland Vacuum Industries, Inc., 35 Howard Ave., Churchville, NY 14428.

MC 151707 (Sub-II-4TA), filed December 11, 1980. Applicant: PIONEER TRUCKING, INC., 1105 N. Market St., 15th Floor, Wilmington, DE 19801. Representative: Dennis Kupchik (same address as applicant). *Aluminum, Brass, Bronze or Copper Articles* between points in CT, IL, IN, KY, MA, MI, MN, MO, NJ, OH, PA, RI, and WI for 270 days under continuing contract(s) with Commonwealth Metal Corp., Englewood Cliffs, NJ. An underlying ETA seeks 120 days authority. Supporting shipper: Commonwealth Metal Corp., 560 Sylvan Ave., Englewood Cliffs, NJ.

MC 107403 (Sub-II-38TA), filed December 11, 1980. Applicant: MATLACK, INC., 10 W. Baltimore Ave., Landsdowne, PA 19050. Representative: Martin C. Hynes, Jr. (same as applicant). *24D Insecticide, in bulk, in tank vehicles,* from Portland, OR, to St. Joseph, MO, for 270 days. An underlying ETA seeks 120 days authority. Supporting shipper: Rhone Poulenc Chemical Co., 6200 N. W. St. Helens Rd., Portland, OR 97210.

MC 107012 (Sub-II-117TA), filed December 12, 1980. Applicant: NORTH AMERICAN VAN LINES, INC., 5001 U.S. Hwy. 30 West, P.O. Box 988, Fort Wayne, IN 46801. Representative: David D. Bishop (same as applicant). *(1) Doors, door frames, and partitions; and (2) parts and accessories for the commodities named in (1) above* from Brooklyn, NY to points in the US (except AK and HI) for 270 days. An underlying ETA seeks 120 days authority. Supporting shipper: Williamsburg Steel Products Co., Inc., 73 Paidge Ave., Brooklyn, NY 11222.

Note.—Common control may be involved.

MC 152766 (Sub-II-1TA), filed December 9, 1980. Applicant: NORTHERN VIRBINIA MOVING & STORAGE CO., P.O. Box 1125 CS, Fredericksburg, VA 22401. Representative: Robert J. Gallagher, 1000 Connecticut Ave., N.W., Suite 1112, Washington, DC 20036. *Used household goods and unaccompanied baggage* between pts. in Stafford County, Prince William County, Spotsylvania County and the City of Fredericksburg, VA; DC; and MD for 270 days. An underlying ETA seeks 120 days authority. Supporting shipper: U.S. Army Legal Services Agency, 5611 Columbia Pike, Falls Church, VA 22041.

THE FOLLOWING PROTESTS WERE FILED IN REGION 4. SEND PROTESTS TO: CONSUMER ASSISTANCE CENTER, INTERSTATE COMMERCE COMMISSION, 219 SOUTH DEARBORN STREET, ROOM 1304, CHICAGO, IL 60604.

MC 146167 (Sub-4-1TA), filed December 10, 1980. Applicant: ALL FREIGHT EXPRESS, INC., 7200 South Ferdinand Avenue, Bridgeview, Il 60455. Representative: Anthony E. Young, 29 South LaSalle Street, Suite 350, Chicago, Il 60603. *Copper and brass articles, aluminum and aluminum products, and scrap* between Chicago, IL and its commercial zone on the one hand, and on the other, points in IN, WI, MI, under a contract or continuing contracts with R. Lavin & Sons. An underlying ETA seeks 120 days authority. Supporting shipper: R. Lavin & Sons, 3426 South Kedzie Avenue, Chicago, IL 60623.

MC 58851 (Sub-4-2TA), filed December 10, 1980. Applicant: RUDOLF EXPRESS CO., 1650 Armour Road, Bourbonnais, IL 60914. Representative: Carl L. Steiner, 39 South LaSalle Street, Chicago, IL 60603. Common, Regular: *General Commodities (Except Commodities in Bulk, Household Goods as defined by the Commission, and Classes A and B Explosives)* Between points in that part of IA on and East of U.S. 61 and on and South of U.S. 30. There are 34 shippers supporting this application. Applicant proposes to tack this authority with its existing authority at Davenport, IA, to serve authorized points in IL and IN.

MC 133689 (Sub-4-56TA), filed December 11, 1980. Applicant: OVERLAND EXPRESS, INC., 8651 Naple Street N.E., Blaine, MN 55434. Representative: Anthony E. Young, 29 South LaSalle Street, Chicago, IL 60603. *Such merchandise as is dealt in by craft and nursery stores and in connection therewith equipment, materials, and supplies used in the conduct of such business (except commodities in bulk),* between points in the U.S. in and east of ND, SD, NE, KS, OK, and TX. Restricted to shipments originating or destined to the facilities of Frank's Nursery & Crafts, Inc. Supporting shipper: Frank's Nursery & Crafts, Inc., 6399 East Nevada, Detroit, MI 48234.

MC 153074 (Sub-4-1TA), filed December 11, 1980. Applicant: F. RILEY'S EXPRESS, INC., 7611 W. Lincoln Ave., Summit, IL 60501. Representative: Daniel C. Sullivan, Sullivan & Associates, Ltd., 10 S. LaSalle Street, Suite 1600, Chicago, IL 60603. (1) *Acoustical suspension systems,* (2) *metal studs and metal floor track,* (3) *metal ceiling track,* (4) *metal hoses and metal tubing,* and (5) *iron and steel articles,* between Cook County, IL, on the one hand, and, on the other, points in IL, IN, IA, MI, MO, and WI. Supporting shipper: Chicago Metallic Corporation, 4849 S. Austin Avenue, Chicago, IL 60638.

MC 153074 (Sub-4-1TA), filed December 11, 1980. Applicant: F. RILEY'S EXPRESS, INC., 7611 W. Lincoln Ave., Summit, IL 60501. Representative: Daniel C. Sullivan, Sullivan & Associates, Ltd., 10 S. LaSalle Street, Suite 1600, Chicago, IL 60603. *Food or kindred products,* between Cook County, IL and Milwaukee County, WI, on the one hand, and, on the other, points in IL, IN, IA, MI, MO, and WI. Supporting shipper: V. LaRosa & Sons, Inc., 1495 Greenleaf, Elk Grove Village, IL 60007.

MC 106674 (Sub-4-38TA), filed December 11, 1980. Applicant: SCHILLI MOTOR LINES, INC., P.O. Box 123, Remington, IN 47977. Representative: Jerry L. Johnson (same address as applicant). *Silica sand* from La Salle County, IL to the facilities of Thatcher Glass Manufacturing Company, Division of Dart Industries at Lawrenceburg, IN. An underlying ETA seeks 120 days authority. Supporting shipper: Thatcher Glass Manufacturing Company, P.O. Box 265, Elmira, NY 14902.

MC 142715 (Sub-4-12TA), filed December 11, 1980. Applicant: LENERTZ, INC., P.O. Box 479, South St. Paul, MN 55075. Representative: K. O. Petrick (same address as applicant). *Alcoholic beverages and equipment, materials and supplies used in the manufacture and distribution of alcoholic beverages.* From Chicago, IL, Cincinnati, OH and Frankfort, KY to Wausau, WI. Supporting shipper: Ed Phillips and Sons Co., 801 Jefferson St., Wausau, WI 54401.

MC 129645 (Sub-4-5TA), filed December 11, 1980. Applicant: SMEESTER BROS., INC., 1330 South Jackson Street, Iron Mountain, MI 49801. Representative: H. G. Denny (same address as applicant). *General commodities (except those of unusual value, classes A and B explosives, household goods as defined by the Commission, commodities in bulk, and those requiring special equipment),* between points in the U.S. in and east of ND, SD, NE, KS, OK, and TX. Supporting shipper: Superwood Corporation, P.O. Box 6267, Duluth, MN 55806.

MC 133689 (Sub-4-51), filed December 12, 1980. Applicant: OVERLAND EXPRESS, INC., 8651 Naples St. NE, Blaine, MN 55434. Representative: Robert P. Sack, P.O. Box 6010, West St. Paul, MN 55118. *Electrical accessories and electrical articles and materials, supplies and equipment used in the manufacture and distribution of electrical accessories and electrical articles,* between points in the U.S. in and east of ND, SD, NE, KS, OK, and TX. Restricted to the facilities of L & L Manufacturing Co. at or near Minneapolis, MN. Supporting shipper: L & L Manufacturing Co., 8290 Main Street NE, Fridley, MN 55433.

MC 110420 (Sub-4-11TA), filed December 3, 1980. Applicant: QUALITY CARRIERS, INC., 100 Waukegan Road, P.O. Box 1000, Lake Bluff, IL 60044. Representative: John R. Sims, Jr., 915 Pennsylvania Building, 425 13th Street NW, Washington, DC 20004. (1) *Empty marine containers with chassis* from Jacksonville, FL to Argo, and (2) *Corn, Steepwater,* in bulk, in marine containers, from Argo, IL to Jacksonville, FL. An underlying ETA seeks 120 days authority. Supporting shipper: Abbott Laboratories, Inc., 16th & Sheridan Road, Dept. 29B, North Chicago, IL 60064.

MC 114632 (Sub-4-23TA), filed December 10, 1980. Applicant: APPLE LINES, INC., P.O. Box 287, Madison, SD 57042. Representative: David E. Peterson, (same address as applicant). *Paint, lacquer, enamel, epoxies, resins, pigments, adhesives, rubber cement and thinning and removing compounds, and materials, equipment and supplies used in the manufacture and distribution of such commodities,* between points in the U.S. (except AK and HI); Restricted to the transportation of traffic originating at or destined to the facilities of Pratt & Lambert, Inc. and its subsidiaries. Supporting shipper: Pratt & Lambert, Inc., P.O. Box 22, Buffalo, NY 14240.

MC 20992 (Sub-4-2TA), filed December 10, 1980. Applicant: DOTSETH TRUCK LINE, INC., Knapp, WI 54749. Representative: Bradford E. Kistler, P.O. Box 82028, Lincoln, NE 68501. *Farm equipment,* from the Brodhead, WI, commercial zone, to points in UT, CO, OR, WA, SD, NY, VA, MD, VT and GA. An underlying ETA seeks 120 days authority. Supporting shipper: Knight Manufacturing Corporation, 1401 West Eighth Ave., Brodhead, WI 53520.

MC 94430 (Sub-4-3TA), filed December 10, 1980. Applicant: WEISS TRUCKING COMPANY, INC., P.O. Box 7, Mongo, IN 46771. Representative: James R. Stiverson, 1396 W. Fifth Avenue, Columbus, OH 43212. *Calcium Chloride,* in bulk, from Midland and Ludington, MI to Cleveland, OH. An underlying ETA seeks 120 days authority. Supporting shipper: Lowe Chemical Company, 1210 West 69th Street, Cleveland, OH 44102.

MC 151636 (Sub-4-2TA), filed December 12, 1980. Applicant: RULEAU BROS. TRANSPORT, INC., Cedar River, MI 49813. Representative: Michael S. Varda, 121 S. Pinckney Street, Madison, WI 53703. *Pet food,* from Kansas City, KS to points in IL, IN, IA, MN, MO, and WI. An underlying ETA seeks 120 days authority. Supporting shipper: Perk Foods Company, a subsidiary of CHB Foods, Inc., 4141 Fairbanks Avenue, Kansas City, KS 66106.

MC 124078 (Sub-4-49TA), filed December 9, 1980. Applicant: SCHWERMAN TRUCKING CO., 611 South 28th Street, Milwaukee, WI 53215. Representative: Richard H. Prevette, P.O. Box 1601 Milwaukee, WI 53201. *Chemicals,* in bulk, in tank vehicles, between points in Milwaukee, WI on the one hand and on the other, points in the U.S. Supporting shipper: Wayne Chemicals Corporation, 546 S. Water St. Milwaukee, WI.

MC 141318 (Sub-4-2TA), filed December 11, 1980. Applicant: WEATHER SHIELD TRANSPORTATION, LTD., 531 North Eighth Street, Medford, WI 54451. Representative: Robert S. Lee, 1600 TCF Tower, Minneapolis, MN 55402. *Fiber containers and container components* from points on the U.S.-Canada Border in ND and MN to points in the U.S., restricted to traffic originating at the facilities of Fibre Form Industries, Ltd. at Tisdale, Saskatchewan, Canada. Supporting shipper: Fibre Form Industries, Ltd., 900 CN Tower, Midtown Plaza, Sasketoon, Saskatchewan, CN 57K1J7.

MC 152046 (Sub-4-1TA), filed December 11, 1980. Applicant: JERRY HOLMER, d.b.a. HOLMER TRUCKING, Route 2, Park Rapids, MN 56470. Representative: David C. Britton, 1425 Cottonwood Street, Grand Forks, ND 58201. *Lumber, and wood products* between points in WA, ID, and MT on the one hand, and, on the other, points in MN. Supporting shipper: Midwest Lumber Associates, 6875 Washington Avenue, South, Suite 212, Minneapolis, MN.

MC 145636 (Sub-4-4TA), filed December 11, 1980. Applicant: BOB BRINK, INC., 165 Steuben St., Winona, MN 55987. Representative: Edward H. Instenes, 128½ Plaza East, P.O. Box 676, Winona, MN 55987. *(1) Cabinets, metal; Desks, wood and steel; Sheet steel articles; Seat cabs; and (2) Such articles as are used in the assembly, manufacture, sale and distribution of those commodities named in (1) above and (3) Commodities which are otherwise exempt from economic regulation when in mixed loads with those named in (1) and/or (2) above:* Between Rochester, MN on the one hand and points east of ND, SD, IA, MO, AR, and LA on the other. Supporting shipper: G. F. Crenlo, Inc., 1600 NW 4th Ave., Rochester, MN 55901.

MC 11928 (Sub-4-1TA), filed December 11, 1980. Applicant: C & E TRUCKING CORPORATION, 1818 West Sample Street, South Bend, IN 46621. Representative: Anthony E. Young, 29 South LaSalle Street, Suite 350, Chicago, IL 60603. *Such commodities as are dealt in or used by wholesale, retail, and chain grocery and food business houses* from Chicago, IL and points in its commercial zone to points in MI, IN, and OH restricted to the transportation of traffic originating at the facilities of Dry Storage Corporation. Any underlying ETA seeks 120 days authority.

Supporting shipper: Dry Storage Corporation, 2005 West 43rd Street, Chicago, IL 60609.

MC 153070 (Sub-4-1TA), filed December 10, 1980. J. HOOVER ENTERPRISES, INC., d.b.a. GO-FER EXPRESS. Applicant: 903 East Lincolnway, LaPorte, IN 46350. Representative: Patrick H. Smyth, 19 South LaSalle Street, Suite 401, Chicago, IL 60603. *Machinery parts, plastic products, equipment and supplies,* between points in Porter, LaPorte, St. Joseph, Elkhart and Marshall Counties, IN, on the one hand, and, on the other, points in IL, IA, MI, MO and WI. Supporting shippers: There are 5.

MC 153072 (Sub-4-1), filed December 10, 1980. Applicant: KARL T. BROWNING, R.R. #1, Palestine, IL 62451. Representative: Robert T. Lawley, 300 Reisch Bldg., Springfield, IL 62701. *Contract,* irregular: *Electric motors,* from Highland and Palestine, IL to points in the U.S. under continuing contracts with Jakel Motors of Palestine, Inc. and Jakel Motors, Inc. An underlying ETA seeks 120 days authority. Supporting shipper: Jakel Motors of Palestine, Inc. and Jakel Motors, Inc., P.O. Box 104, Industrial Park Rd., Palestine, IL 62451.

MC 148966 (Sub-4-5TA) filed December 9, 1980. Applicant: DROTZMANN, INC., P.O. Box 667, Yankton, SD 57078. Representative: James M. Hodge, 1980 Financial Center, Des Moines, IA 50309. *General commodities (except those of unusual value, Classes A and B explosives, household goods as defined by the Commission, commodities in bulk, and those requiring special equipment)* from the facilities of Terminal Freight Cooperative Association at Los Angeles, CA to Eugene, OR. Restricted to traffic which is at the time moving on bills of lading of a non-profit shipper association. An underlying ETA seeks 120 days authority. Supporting Shipper: Terminal Freight Cooperative Association, 1430 Brading Lane, Downers Grove, IL 60515.

MC 124078 (Sub-4-48TA) filed December 12, 1980. Applicant: SCHWERMAN TRUCKING CO., 611 South 28th Street, Milwaukee, WI 53215. Representative: Richard H. Prevette, P.O. Box 1601, Milwaukee, WI 53201. *Plasticizer,* in bulk, in tank vehicles between points in AL, FL, GA, NJ, NC, PA, SC, and TN. An underlying ETA seeks 120 days. Supporting shipper: East Coast Chemicals Co., P.O. Box 160, Cedar Grove, NJ 07009.

MC 70557 (Sub-4-9TA), filed December 11, 1980. Applicant: NIELSEN BROS. CARTAGE CO., INC., 4619 West Homer Street, Chicago, IL 60639. Representative: Carl L. Steiner, 39 South LaSalle Street, Chicago, IL 60603. *Paper and paper products and materials, equipment and supplies used in the manufacture and distribution of paper and paper products,* between points in the U.S. restricted to traffic originating at or destined to the facilities of Manville Forest Products Corporation. Supporting shipper: Forest Manville Products Corporation, P.O. Box 488, West Monroe, LA 71291.

MC 153114 (Sub-4-1TA), filed December 11, 1980. Applicant: OLYMPIC EXPRESS, INC., 2690 East 81st, Bloomington, MN 55420. Representative: Stanley C. Olsen, Jr., Gustafson & Adams, P.A., 7400 Metro Boulevard, Suite 411, Edina, MN 55435. *Non-exempt food or kindred products, as set forth in STCC Major Industrial Grouping No. 20,* between Stark County, ND, Eau Claire County, WI, Martin, Nobles, Watonwan and Wright Counties, MN, and the Minneapolis/St. Paul Commercial Zone, on the one hand, and, on the other, points in IA, MN, ND, SD, and WI. Supporting shipper: Trans-Consolidated, Inc., 17745 Ward Lake Drive, Cedar, MN 55011.

MC 30504 (Sub-4-3TA), filed December 11, 1980. Applicant: TUCKER FREIGHT LINES, INC., 1415 South Olive Street, P.O. Box 3144, South Bend, IN 46619. Representative: Edward G. Bazelon, 39 South La Salle Street, Chicago, IL 60603. *Common;* Regular: *General commodities* (except commodities of unusual value, commodities in bulk, and those requiring special equipment): (1) between Benton Harbor, MI, and Clyde, OH, serving all intermediate points: From Benton Harbor over U.S. Hwys 31 and 33 to South Bend, IN, then over U.S. Hwy 20 to Clyde, and return over the same route; (2) between Benton Harbor, MI, and Marion, OH, serving all intermediate points: (a) from Benton Harbor over U.S. Hwys 31 and 33 to South Bend, IN, then over U.S. Hwy 33 to junction U.S. Hwy 23, then over U.S. Hwy 23 to Marion, and return over the same route; (b) from Benton Harbor over U.S. Hwys 31 and 33 to South Bend, IN, then over U.S. Hwy 33 to junction U.S. Hwy 30, then over U.S. Hwy 30 to junction U.S. Hwy 30S, then over U.S. Hwy 30S to Marion, and return over the same route; and (c) from Benton Harbor over U.S. Hwys 31 and 33 to junction U.S. Hwy 20, then over U.S. Hwy 20 to junction OH Hwy 4, then over OH Hwy 4 to Marion, and return over the same route. Supporting shipper: Whirlpool Corporation, 2000 U.S. 33, North, Benton Harbor, MI 49022.

MC 123194 (Sub-4-3TA), filed December 11, 1980. Applicant: ENTERPRISE TRUCK LINES, INC., 7336 West 15th Avenue, Gary, IN 46406. Representative: Anthony E. Young, 29 S. LaSalle St., Chicago, IL 60603. *Meat, meat products, and meat by-products* from the facilities of Peschke Packing Company located at or near Detroit, MI to points in IL, IN, WI, KY, OH, and PA. An underlying ETA seeks 120 days authority. Supporting shipper: Peschke Packing Company, 18615 Sherwood Ave., Detroit, MI 48204.

MC 153113 (Sub-4-1TA), filed December 12, 1980. Applicant: MENASHA TRANSPORT, INC., P.O. Box 367, Neenah, WI 54956. Representative: Norman A. Cooper, 145 W. Wisconsin Ave., Neenah, WI 54956. *General commodities (except Class A & B Explosives and articles of Unusual value)* between points in the U.S., restricted to traffic to, from or between the facilities operated by Menasha Corporation and its subsidiaries. An underlying ETA seeks 120 days authority. Supporting shipper: Menasha Corporation and subsidiaries, Hwy 41, Neenah, WI 54956.

MC 113009 (Sub-4-1TA), filed December 11, 1980. Applicant: L. J. BEAL & SON, INC., 212 South Main Street, Brooklyn, MI 49230. Representative: Gary T. Rose, 22375 Haggerty Road, P.O. Box 400, Northville, MI 48167. *Cement* from Detroit, MI to Paulding, OH. Supporting shipper: General Portland, Inc., Paul Knerr, P.O. Box 1019, Ft. Wayne, MI 46801.

MC 119619 (Sub-4-6TA), filed December 11, 1980. Applicant: DISTRIBUTORS SERVICE CO., 2000 W. 43rd Street, Chicago, IL 60609. Representative: Arthur J. Piken, Queens Office Building, 95-25 Queens Boulevard, Rego Park, NY 11374. *Foodstuffs (except in bulk).* From the facilities of Doric Foods at Findlay, OH to points in CT, DE, ME, MD, MA, NH, NJ, RI, VA, VT and WV. An underlying ETA seeks 120 days authority. Supporting shipper: Doric Foods Corporation, P.O. Box 986, Mount Dora, FL 32757.

MC 148314 (Sub-4-34TA), filed December 11, 1980. Applicant: INTER-FREIGHT TRANSPORTATION, INC., 655 East 114th Street, Chicago, IL 60628. Representative: Joel H. Steiner, 39 South LaSalle, Suite 600, Chicago, IL 60603. *Crude silicon carbide and silicon carbide briquettes,* between Milwaukee, WI; Saginaw, MI; and Birmingham, AL, on the one hand, and, on the other, points in the U.S. in and east of the States of ND, SD, NE, CO and NM. Supporting shipper: Miller & Company,

55 East Monroe Street, Chicago, IL 60603.

MC 58851 (Sub-4-3TA), filed December 10, 1980. Applicant: RUDOLF EXPRESS CO., 1650 Armour Road, Bourbonnais, IL 60914. Representative: Carl L. Steiner, 39 South La Salle Street, Chicago, IL 60603. *Common,* Regular: *General Commmodities* (except commodities in bulk, household goods as defined by the Commission, and classes A and B explosives) between Chicago, IL, and Milwaukee, WI, over U.S. 41, serving all intermediate points and the off-route point of Kenosha, WI. There are 38 shippers supporting this application. Applicant proposes to: (1) Serve all points in the Commercial Zones of Chicago, IL, and Kenosha and Milwaukee, WI; and (2) Interline at Chicago, IL, and Milwaukee, WI, and points in the respective Commercial Zones; and (3) Tack at Chicago, IL, and points in its Commercial Zone with its existing authority to serve points in IL and IN.

MC 153071 (Sub-4-1TA), filed December 9, 1980. Applicant: LENAWEE COUNTY RAILROAD CO., INC., 708 E. Michigan Street, Adrian, MI 49221. Representative: John D. Heffner, Esq., Suite 500, 2011 I Street, NW., Washington, DC 20006. *General commodities* (except classes A and B explosives and household goods), between points in Detroit, MI, Toledo, OH, and Montpelier, OH, and their respective commercial zones, and points in Lenawee, Monroe, and Washtenaw Counties, MI. Supporting shipper(s): Approximately 6 supporting shippers are supporting this application.

Note.—Applicant intends to interline at Detroit, MI; Toledo, OH; and Montpelier, OH.

MC 153077 (Sub-4-1TA), filed December 9, 1980. Applicant: TOTAL TRANSPORTATION, INC., 1601 99th Lane NE., Minneapolis, MN 55434. Representative: Stanley C. Olsen, Jr., Gustafson & Adams, P.A., 7400 Metro Boulevard, Suite 411, Edina, MN 55435. *Non-exempt food or kindred products as set forth in STCC Major Industrial Grouping No. 20,* between points in Stark County, ND, Eau Claire County, WI, Martin, Nobles, Watonwan and Wright Counties, MN, and points in the Minneapolis/St. Paul Commercial Zone, on the one hand, and, on the other, points in the U.S. Supporting shipper: Trans-Consolidated, Inc., 17745 Cedar Lake Drive, Cedar, MN 55011.

MC 146314 (Sub-4-5TA), filed December 10, 1980. Applicant: G & T TRUCKING CO., Route 1, County Road 2 and I-35 S, Elko, MN 55020. Representative: Thomas Zwiers (same as above). *Transformers and related apparatus,* between points in the U.S. An underlying ETA seeks a 120 days. Supporting shippers: R. S. Electric, Jordon, MN and B & B Transformers, Farmington, MN.

MC 147644 (Sub-4-7TA), filed December 10, 1980. Applicant: JMC TRANSPORT, INC., 1719 Potters Lane, Jeffersonville, IN 47130. Representative: Gerald K. Gimmel, Suite 145, 4 Professional Drive, Gaithersburg, MD 20760. *Such commodities as are dealt in and used by producers and distrubutors of alcoholic beverages* from Bardstown, Clermont, Frankfort, Lawrenceburg, Louisville, and Owensboro, KY, Lawrenceburg, IN, Kansas City, MO, St. Louis, MO, and Cincinnati, OH, on the one hand, and, on the other hand, Phoenix, AZ, Tuscon, AZ, Little Rock, AR, Harahan, LA, Layfayette, LA, Shreveport, LA, and Amarillo, Corpus Christi, Dallas, El Paso, Ft. Worth, Houston, Odessa, and San Antonio, TX. Underlying ETA seeks 120 days authority. Supporting shipper: Glazer's Wholesale Drug Co., Inc., 508 Park Ave., Dallas, TX 75201.

MC 152995 (Sub-4-1TA), filed December 10, 1980. Applicant: JAMES THOMAS TRUCKING, INC., 17708 Stonebridge Drive, Hazel Crest, IL. 60429. Representative: James Thomas (same address as applicant). *Contract,* irregular: *Paint, paint materials, aerosal cans, and materials, equipment and supplies, (except in bulk), used in the manufacture, sales, and distribution of paint products,* between the facilities of Illinois Bronze Powder Paint Company on the one hand, and, on the other hand, points in AR, CO, GA, IL, IN, IA, LA, KS, KY, MO, NE, NV, NJ, OH, OK, PA, TN, TX, UT, and WY. An underlying ETA seeks 120 days authority. Restricted to traffic moving under continuing contract(s) with Illinois Bronze Powder Paint Company. Supporting shipper: Illinois Bronze Powder Paint Company, 300 E. Main Street, Lake Zurich, IL. 60047.

MC 108185 (Sub-4-13TA), filed December 10, 1980. Applicant: JACK COLE-DIXIE HIGHWAY COMPANY, 2625 Territorial Road, St. Paul, MN 55114. Representative: Robert P. Sack, P.O. Box 6010, West St. Paul, MN 55118. *Lumber; posts and poles; building materials, wooden* from the Plant Site of B. B. Springer Lumber Company, Millport, AL to points in AR, FL, IL, IN, IA, KY, MI, MN, MO, NE, OH, PA, TN, TX, VA, WV and WI. An underlying ETA seeks 120 days authority. Supporting shipper: B. B. Springer Lumber Company, Box 278, Millport, AL 35576.

MC 148665 (Sub-4-4), filed December 10, 1980. Applicant: CFS CONTINENTAL TRANSPORTATION COMPANY, 2550 N. Clybourn Ave., Chicago, IL 60614. Representative: Leanord R. Kofkin, 39 S. La Salle St., Chicago, IL 60603. *Frozen foodstuffs* from the facilities of Omaha Cold Storage Terminals, Inc. at Ft. Dodge, IA to Chicago, IL; Indianapolis, IN; Detroit, MI; and Minneapolis, MN, and their respective commercial zones. An underlying ETA seeks 120 day authority. Supporting shipper: CFS Continental, Inc., 100 S. Wacker Dr., Chicago, IL 60606.

MC 151934 (Sub-4-3TA), filed December 10, 1980. Applicant: KING'S EXPRESS, INC., Rural Route 2, St. Joseph, MN 56374. Representative: Stanley C. Olsen, Jr., Gustafson & Adams, P.A., 7400 Metro Blvd., Suite 411, Edina, MN 55435. *Foodstuffs,* between Portage, WI; on the one hand, and, on the other, points in IA, MN and SD. Supporting shipper: Copps Distributing—IGA Chain Stores, 2828 Wayne Street, Stevens Point, WI 54481.

MC 127187 (Sub-4-3TA), filed December 5, 1980. Applicant: FLOYD DVENOW, INC., P.O. Box 86, Savage, MN 55378. Representative: Stanley C. Olsen, Jr., 7400 Metro Boulevard, Suite 411, Edina, MN 55435. *Lumber and lumber products,* from points in ID, MT, OR and WA to points in IL, IN, IA, KS, MI, MN, MO, NE, ND, OH, SD and WI. Supporting shippers: Emmers Brothers Co., 520 Southdale Office Center, Minneapolis, MN 55435. T. W. Hager Lumber Company, 1545 Marquette SW., P.O. Box 9040, Grand Rapids, MI 49509.

MC 151482 (Sub-4-5), filed December 5, 1980. Applicant: ROCK VALLEY CONTRACT CARRIERS, INC., 3571 Merchandise Dr., Rockford, IL 61109. Representative: Henry M. Wick, Jr., 2310 Grant Bldg., Pittsburgh, PA 15219. *Contract Irregular* (1) *Printed Material and related materials and supplies,* between Mt. Morris, IL, on the one hand, and, on the other, points in the U.S. (except AK and HI), under continuing contract(s) with Kable Printing Co. of Mt. Morris, IL; (2) *Machinery and related accessories, and equipment, materials and supplies* used in the manufacture and distribution of the above commodities, between Rockford, IL, on the one hand, and, on the other, points in the U.S. (except AK and HI), under continuing contract(s) with W. A. Whitney Corp. of Rockford, IL; (3) *Heat treating equipment, and equipment, materials and supplies* used in the manufacture and distribution of the above commodities, between Cherry Valley, IL, on the one hand, and, on the

other, points in the U.S. (except AK and HI), under continuing contract(s) with Ipsen Industries of Cherry Valley, IL; (4) *Pet food, and materials and supplies* used in the manufacture and distribution of pet food, from Rockford, IL, to Shiremanstown, PA, Bethel, CT and Marion, OH, under continuing contract(s) with The Quaker Oats Company of Chicago, IL; Supporting shippers: Kable Printing Co., Mt. Morris, IL; W. A. Whitney Corp., 650 Race Street, Rockford, IL; Ipsen Industries, 984 Ipsen Road, Cherry Valley, IL; The Quaker Oats Company, Merchandise Mart Plaza, Chicago, IL 60654.

MC 152019 (Sub-42TA), filed December 4, 1980. Applicant: C.A.T. TRUCKING INC., State Hwys. 3 and 46 W., P.O. Box 487, Greensburg, IN 47240. Representative: Robert W. Loser II, 1101 Chamber of Commerce Bldg., 320 N. Meridian St., Indianapolis, IN 46204. *Contract; Irregular: General commodities* (except classes A and B explosives and household goods as defined by the Commission) between points in the U.S., under continuing contract(s) with Crown Zellerbach Corporation of South Glens Falls, NY. Supporting shipper: Crown Zellerbach Corporation, One River St., So. Glens Falls, NY 12801.

MC 108223 (Sub-4-5), filed December 4, 1980. Applicant: CENTURY-MERCURY MOTOR FREIGHT, INC., P.O. Box 43050, St. Paul, MN 55164. Representative: Warren K. Wahoske, P.O. Box 43050, St. Paul, MN 55164. *Furnaces, heating equipment and parts and accessories* between St. Paul, MN, on the one hand, and, on the other, points in the U.S. Supporting shipper: Applied Air Systems, 2475 Doswell Ave., St. Paul, MN 55108.

MC 139482 (Sub-4-20TA), filed December 4, 1980. Applicant: NEW ULM FREIGHT LINES, INC., P.O. Box 877, New Ulm, MN 56073. Representative: Barry M. Bloedel, P.O. Box 877, New Ulm, MN 56073. (1) *Hospital supplies* and (2) *materials, equipment and supplies used in the manufacture and distribution of hospital supplies,* between points in the U.S. (except AK and HI). Restricted to the facilities originating at or terminating at the facilities of Medline Industries, Inc. An underlying ETA seeks 120 days authority. Supporting shipper: Medline Industries, Inc., 1825 Shermer, Northbrook, IL 60062.

MC 139482 (Sub-4-19TA), filed December 3, 1980. Applicant: NEW ULM FREIGHT LINES, INC., P.O. Box 877, New Ulm, MN 56073. Representative: Barry M. Bloedel, P.O. Box 877, New Ulm, MN 56073. (1) *Foodstuffs,* (2) *materials, supplies and equipment used in the manufacture and distribution of foodstuffs (except commodities in bulk),* from Chicago, IL, and its commercial zone to Arlington, TX, Atlanta, GA, Baltimore, MD, Birmingham, AL, Boston, MA, Buffalo, NY, Charlotte, NC, Cincinnati, OH, Cleveland, OH, Columbus, OH, Davenport, IA, Denver, CO, Des Moines, IA, Detroit, MI, Grand Rapids, MI, Green Bay, WI, Huntington, WV, Jacksonville, FL, Jersey City, NJ, Kansas City, MO, Los Angeles, CA, Memphis, TN, Milwaukee, WI, Minneapolis, MN, Nashville, TN, New Orleans, LA, Omaha, NE, Pittsburgh, PA, Portland, OR, St. Louis, MO, Salt Lake City, UT and San Francisco, CA. Restricted to the facilities of Tootsie Roll Industries, Inc. An underlying ETA seeks 120 days authority. Supporting shipper: Tootsie Roll Industries, Inc., 7401 S. Cicero Ave., Chicago, IL 60629.

MC 143630 (Sub-4-2TA), filed December 3, 1980. Applicant: FLOYD M. GRIEBEL, SR., FLOYD M. GRIEBEL, JR., and WILLIAM GRIEBEL, d.b.a. GRIEBEL'S TRUCKING, a partnership, P.O. Box 243, Marengo, IL 60152. Representative: Robert J. Gill, First Commercial Bank Bldg., 410 Cortez Rd. West, Bradenton, FL 33507. *Contract, irregular such commodities as are dealt in by a manufacturer or distributor of road construction products and building materials,* except commodities in bulk and commodities which require the use of specialized equipment, between Elgin and Hampshire, IL on the one hand, and, on the other points in the U.S. under continuing contract(s) with W. R. Meadows, Inc. Supporting shipper: W. R. Meadows, Inc., P.O. Box 543, Elgin, IL 60120.

MC 152322 (Sub-4-1), filed December 4, 1980. Applicant: B&D TRUCKING CORPORATION, 8730 Chesaning Rd., Chesaning, MI. Representative: David Earl Tinker, 1000 Connecticut Avenue, N.W., Suite 1200, Washington, D.C. 20036. *Meats, meat products, meat byproducts, and commodities dealt in, bought, and/or distributed by Peet Packing Company,* between points in the U.S. under continuing contract(s) with Peet Packing Company of Chesaning, MI. An underlying ETA seeks 120 days authority. Peet Packing Company, 1100 N. Line Street, Chesaning, MI 48616.

MC 138420 (Sub-4-2TA), filed December 4, 1980. Applicant: CHIZEK ELEVATOR & TRANSPORT, INC., Route 1, P.O. Box 147, Cleveland, WI 53063. Representative: Wayne W. Wilson, 150 East Gilman St., Madison, WI 53703. *Such commodities as are dealt in or used by manufacturers, converters, printers, and distributors of paper and paper products* (except commodities in bulk), between points in OH on the one hand, and, on the other, points in WI. An underlying ETA seeks 120 days authority. Supporting shippers: Continental Group, Inc.—Continental Forest Industries—Fiberdrum Division, 1200 Harger Road, Suite Oak Brook, Il 60521; Rhinelander Paper Company, Inc., 515 W. Davenport St., Rhinelander, WI 54501.

MC 2277 (Sub-4-5), filed December 3, 1980. Applicant: FRUTH MOTOR TRUCK SERVICE, INC., 720 Scheel Street, P.O. Box 992, Belleville, IL 62221. Representative: Leslieann G. Maxey, 907 South Fourth St., Springfield, IL 62703. *General commodities* from points in the State of NJ to the facilities of WAL-MART Corporation at Bentonville, AK and Searcy, AK. Supporting shipper: WAL-MART Corporation, Bentonville, AK 72712.

MC 105501 (Sub-4-5TA), filed December 4, 1980. Applicant: TERMINAL WAREHOUSE COMPANY, 1851 Raddison Road N.E., Blaine, MN 55434. Representative: Joseph J. Dudley, Dudley and Smith, W-1260 First National Bank Bldg., Saint Paul, MN 55101. *General Commodities* (except in Bulk) between IA, IL, IN, KS, MI, MN, MO, ND, NE, OH, MT, CO, SD, WI. Restricted to traffic originating at, or destined to the facilities used by The Pillsbury Company, and its subsidiaries. Supporting shipper: The Pillsbury Company, 608 Second Ave. South, Minneapolis, MN 55402.

MC 42537 (Sub-4-1TA), filed December 4, 1980. Applicant: CASSENS TRANSPORT COMPANY, P.O. Box 468, Edwardsville, IL. Representative: Donald W. Smith, P.O. Box 40248, Indianapolis, IN 46240. *Motor vehicles,* from Chicago, IL to points in MN, ND, and SD. Supporting shipper: Volkswagen of America, Inc., Sylvan Avenue, Englewood Cliffs, NJ 07632.

MC 127079 (Sub-4-1TA), filed December 5, 1980. Applicant: G & M COACHES, INC., 1536 Fuller, S.E., Grand Rapids, MI 49507. Representative: Robert E. McFarland, 2855 Coolidge, Suite 201A, Troy, MI 48084. *Passengers and their baggage, in special and charter operations, in round-trip pleasure and sightseeing tours,* beginning and ending at points in Oceana, Newaygo, Mecosta, Isabella, Muskegon, Montcalm, Gratiot, Ionia, Kent, Ottawa, Mason, Lake, Osceola, Allegan and Barry Counties, MI, and extending to points in the U.S. (except HI). There are 7 statements of support.

MC 116273 (Sub-4-6TA), filed December 5, 1980. Applicant: D & L TRANSPORT, INC., 3800 Larami, Cicero, IL 60650. Representative: William Lavery, (same as applicant). *Castor Oil* in bulk, in tank vehicles, from New York, NY and its commercial zone to Dover, OH. Supporting shipper: Union Camp Corporation, 1600 Valley Road, Wayne, NJ 07470.

MC 133689 (Sub-4-53), filed December 5, 1980. Applicant: OVERLAND EXPRESS, INC., 8651 Naples St. NE, Blaine, MN 55434. Representative: Robert P. Sack, P.O. Box 6010, West St. Paul, MN 55118. *Such merchandise as is dealt in by wholesale, retail and chain grocery and food business houses and in connection therewith, equipment, materials and supplies used in the conduct of such* business (except commodities in bulk) between points in the U.S. in and east of ND, SD, NE, KS, OK, and TX, restricted to the shipments originating at or destined to the TOPCO Associates and/or its members. Supporting shipper: Topco Associates, Inc., 7711 Gross Point Road, Skokie, IL 60077.

MC 133689 (Sub-4-54TA), filed December 5, 1980. Applicant: OVERLAND EXPRESS, INC., 8651 Naples St. NE, Blaine, MN 55434. Representative: Robert P. Sack, P.O. Box 6010, West St. Paul, MN 55118. *General commodities* (except Classes A and B explosives, household and commodities in bulk), from the facilities of The Charter Oaks Shippers Cooperative Association at West Haven, CT to points in and east of ND, SD, NE, KS, MO, AR, and LA. Supporting shipper: The Charter Oaks Shippers Cooperative Association, Berlin, CT.

MC 69833 (Sub-4-12), filed December 4, 1980. Applicant: ASSOCIATED TRUCK LINES, INC., 200 Monroe Avenue, NW—6th Floor, Grand Rapids, MI 49503. Representative: Harry Pohlad (same address as applicant). *Common,* regular; *General Commodities* (except those of unusual value, Classes A and B explosives, household goods as defined by the Commission, commodities in bulk; and those requiring special equipment), serving the points of Midland, MI, and Mt. Pleasant, MI, as off-route points in connection with carrier's authorized regular route operations. Underlying ETA seeks 120 days authority. There are eight supporting shippers.

MC 103993 (Sub-4-25TA), filed December 3, 1980. Applicant: MORGAN DRIVE-AWAY, INC., 28651 U.S. 20 West, Elkhart, IN 46515. Representative: James B. Buda (address same as applicant). *Motor Vehicles* between Walworth County, WI, on the one hand, and on the other points in and east of MT, WY, CO, and NM. Supporting shipper: Leisure Recreational Products, Geneva, WI 53147.

MC 133566 (Sub-4-12TA), filed December 4, 1980. Applicant: GANGLOFF & DOWNHAM TRUCKING, P.O. Box 479, Logansport, IN 46947. Representative: Daniel O. Hands, Suite 200, 205 W. Touhy Av., Park Ridge, IL 60068. *Packaging materials and paperboard cartons,* between Bow, NH, on the one hand, and, on the other, points in the US (except AK and HI). Supporting shipper: Universal Packaging Corporation, P.O. Box 918, Concord, NH 03301.

MC 152996 (Sub-4-1), filed December 4, 1980. Applicant: B&I TRUCKING, INC., 1509 No. Main, Georgetown, IL 61846. Representative: Robert T. Lawley, 300 Reisch Bldg., Springfield, IL 62701. *Contract,* Irregular: *Personal care, health, drug and grooming products, and materials, equipment and supplies used in the manufacture and distribution of said commodities,* between points in the U.S., under continuing contracts with A.T.I., Inc. An underlying E/T/A seeks 120 days authority. Supporting shipper: A.T.I., Inc., 800 So. Gilbert, Danville, IL 61832.

MC 139994 (Sub-4-1TA), filed December 4, 1980. Applicant: JIM AND BOB STENCEL d.b.a. STENCEL TRUCKING, Box 321, Minnesota Lake, MN 56058. Representative: William J. Gambucci, Suite M-20, 400 Marquette Ave., Minneapolis, MN 55401. *Animal pelts,* from Denver, CO; Sioux Falls, SD; Albert Lea, MN; Chicago, IL; Detroit, MI; Boston, MA; New York, NY and San Angelo, TX, to Camden, ME; Gloversville, NY; San Antonio and Ft. Worth, TX; Denver and Eaton, CO; Albert Lea, MN; Los Angeles, CA, and Winchester, NH. A corresponding ETA seeks 120 days authority. Supporting shippers: Southern Wool and Skin Company, Box 7266, San Antonio, TX 78207, Wilson Foods Corp., 4545 North Lincoln Blvd., Oklahoma City, OK 73105; Deifik Trading Corporation, Box 2524, Fort Worth, TX 76113.

MC 138824 (Sub-4-4TA), filed December 4, 1980. Applicant: REDWAY CARRIERS, INC., P.O. Box 104, Waukegan, IL 60085. Representative: Paul J. Maton, 10 S. LaSalle St., Rm. 1620, Chicago, IL 60603. *Contract,* irregular; *Glass containers,* from Burlington, WI to Eau Claire, WI, under continuing contract with Eau Claire Packing Company. Supporting shipper: Eau Claire Packing Company, 7600 Lynn St., Eau Claire, WI 49111.

MC 138824 (Sub-4-4TA), filed December 4, 1980. Applicant: REDWAY CARRIERS, INC., P.O. Box 104, Waukegan, IL 60085. Representative: Paul J. Maton, 10 S. LaSalle St., Rm. 1620, Chicago, IL 60603. *Contract,* irregular; (1) *Wood doors,* from Plymouth, IN to points in IL, KY, MI, OH, WI, MN, MO, NE, ND and SD; and (2) *hardboard door skins,* from Plymouth, IN to Sunbury, PA, under continuing contract with Young Door Company. Supporting shipper: Young Door Company, P.O. Box 700, Plymouth, IN 46563.

MC 138824 (Sub-4-4TA), filed December 4, 1980. Applicant: REDWAY CARRIERS, INC., P.O. Box 104, Waukegan, IL 60085. Representative: Paul J. Maton, 10 S. LaSalle St., Rm. 1620, Chicago, IL 60603. *Contract,* irregular; *Automotive supplies, spring assemblies, cushions and backs,* from Vincennes, IN to the facilities of American Motors Corp. at Detroit, MI, under continuing contracts with Hoover Universal. Supporting shipper: Hoover Universal, 2525 W. 6th St., Vincennes, IN 47591.

MC 152978 (Sub-4-1TA), filed December 3, 1980. Applicant: GEORGE L. POWELL, 356 Dale Rd., Beaverton, MI 48612. Representative: Edward Malinzak, 900 Old Kent Bldg. Grand Rapids, MI 49503. *Contract;* Irregular: *General commodities (except in bulk)* between points in CA, IL and MI, under a continuing contract with Michigan Maple Block Company. Supporting shipper: Michigan Maple Block Company, P.O. Box 245, Petoskey, MI 49770.

MC 136635 (Sub-4-12TA), filed December 5, 1980. Applicant: UNIVERSAL CARTAGE, INC., 640 W. Ireland Road, South Bend, IN 46680. Representative: Donald W. Smith, P.O. Box 40248, Indianapolis, IN 46240. *Iron and steel articles* between the facilities of Jones & Laughlin Steel Corporation at Indianapolis, IN, on the one hand, and, on the other, points in CA, AZ, OR, and WA. Supporting shipper: Jones & Laughlin Steel Corporation, 2301 S. Holt Road, Indianapolis, IN 46241.

MC 152935 (Sub-4-1TA), filed December 5, 1980. Applicant: HILL-ROM COMPANY, INC., Highway 46, Batesville, IN 47006. Representative: Edward F. Schiff, 1333 New Hampshire Avenue, Suite 400, Washington, DC 20036. *Complete waterbedding such as bedsheets, pillowcases, comforters, bedspreads, mattress pads and other such bedding used for waterbeds* from Lake Havasu City, AZ to points in Bristol, WI; Houston, TX; Memphis, TN;

Nashville, TN; Greeley, CO; Dallas, TX; and Chicago, IL under continuing contract(s) with Hydro-Dynamics, Inc. Supporting shipper: Hydro-Dynamics, Inc., 2000 Industrial Blvd, Lake Havasu City, AZ 86403.

MC 145703 (Sub-4-1TA), filed December 3, 1980. Applicant: FRL TRANSPORTATION, INC., 96 Doty Street, Fond du Lac, WI 54935. Representative: James Kiepke, 96 Doty Street, Fond du Lac, WI 54935. *Contract;* Irregular: (1) *Doors, windows, materials, equipment, and supplies* used or useful in the manufacture, sale, or distribution from Fond du Lac County, WI, to points in the U.S. (except AK and HI). Restricted to service performed under a continuing contract(s) with The Combination Door Company. Supporting shipper: The Combination Door Company, 1000 Morris Street, Fond du Lac, WI.

MC 142059 (Sub-4-12TA), filed December 3, 1980. Applicant: CARDINAL TRANSPORT, INC., P.O Box 911, Joliet, IL 60434. Representative: Jack Riley (same address as applicant). *Adhesives in packages* from Paxton, IL to points in the U.S. (except AK and HI). Supporting shipper: Krause Milling Co., P.O. Box 1156, Milwaukee, WI 53201.

MC 152756 (Sub-4-1TA), filed November 28, 1980. Applicant: A.F. TRUCKING, LTD., P.O. Box 346, Grndthal, Manitoba, Canada Roa oRo. Representative: Richard P. Anderson, 502 First National Bank Bldg., Fargo, ND 58126. *Contract;* irregular: (1) *Cat litter,* from Mounds, IL, to ports of entry between the U.S. and Canada at Pembina, ND and Noyes and Warroad, MN; (2) *coffee creamer* from Huntley, IL to ports of entry between the U.S. and Canada at Pembina, ND and Noyes and Warroad, MN; (3) *rice,* from Crowley, LA to ports of entry between the U.S. and Canada at Pembina, ND and Noyes and Warroad, MN, under contract with Westfair Foods, Ltd., of Winnipeg, Manitoba, Canada. A 120 day ETA has been filed. Supporting shipper: Westfair Foods, Ltd., 101 Weston St., Winnipeg, Manitoba, Canada R3C 281.

MC 152936 (Sub-4-1), filed December 3, 1980. Applicant: ADIA CORPORATION, 13101 South Torrence Ave., Chicago, IL 60633. Representative: Daniel C. Sullivan, 10 S. LaSalle St., Suite 1600, Chicago, IL 60603. *Motor vehicles,* between points in IL, IN, MI, OH, and WI, on the one hand, and, on the other, points in OR and WA. An underlying ETA seeks 120 days authority. Supporting shipper: Mazda Motors of America (Central), Inc., 3040 East Ana Street, Compton, CA. 90221.

MC 150798 (Sub-4-3), filed December 2, 1980. Applicant: CKR TRANSPORT, LTD., P.O. Box 599, Elmhurst, IL 60126. Representative: D. R. Beeler, 1261 Columbia Ave., Franklin, TN 37064. *Chemcials, drugs, toilet preparations, health care items, foodstuffs, and materials and supplies used in the manufacture of the aforementioned* between the facilities of Alberto-Culver Company at Melrose Park, IL; Buffalo, NY; Fredonia, NY; and Milltown, NJ on the one hand and points in MO, NE, CO, KS, VA, NV, WA, CA, OR, MA, NY, MD, GA, and PA on the other. Supporting shipper: Alberto-Culver Company, 2525 Armitage Avenue, Chicago, IL 60160.

MC 55896 (Sub-4-10TA), filed December 2, 1980. Applicant: R-W SERVICE SYSTEM, INC., 20225 Goddard Road, Taylor, MI 48180. Representative: George E. Batty (same address as applicant). *Glassware, components, color TV picture tubes* (referred to as face plates and funnels), from Bluffton, IN to Chicago, IL and its Commercial Zone. Supporting shipper: Rauland Division, Zenith Radio Corporation, 2407 W. North Avenue, Melrose Park, IL 60160.

MC 51146 (Sub-4-57TA), filed December 2, 1980. Applicant: SCHNEIDER TRANSPORT, INC., P.O. Box 2298, Green Bay, WI 54306. Representative: Matthew J. Reid (same address as applicant). *General commodities* (except household goods as defined by the Commission and Classes A and B explosives) from Northfield, IL to St. Paul, MN; Chattanooga, TN; and Jacksonville, FL, restricted to traffic originating at or destined to the facilities of Foremost-McKesson, Inc. Supporting shipper: Foremost-McKesson, Inc., One Post St., Crocker Plaza, San Francisco, CA 94104.

MC 120184 (Sub-4-3TA), filed December 2, 1980. Applicant: PEP LINES TRUCKING CO., 32600 Dequindre Road, Warren, MI 48092. Representative: J. A. Kundtz, 1100 National City Bank Bldg., Cleveland, OH 44114. *Motor vehicle parts,* between points in Wayne County, MI, on the one hand, and, on the other, points in the Lower Peninsula of MI. Supporting shipper: Ford Motor Company, One Parklane Blvd., 200 Parkland Twrs. East, Dearborn, MI 48126.

THE FOLLOWING APPLICATIONS WERE FILED IN REGION 5. SEND PROTESTS TO: CONSUMER ASSISTANCE CENTER, INTERSTATE COMMERCE COMMISSION, P.O. BOX 17150, FORT WORTH, TX 76102.

MC 5227 (Sub-5-12TA), filed December 9, 1980. Applicant: ECKLEY TRUCKING, INC., P.O. Box 201, Mead, NE 68041. Applicant's representative: A. J. Swanson, Quaintance & Swanson, P.O. Box 1103, 226 N. Phillips Avenue, Sioux Falls, SD 57101. (1) *Irrigation equipment and manufactured metal articles,* from Platte County, NE to points in GA, AL, NC, SC, LA, TX, OK, AR, OR, WA, ID, WY, MT, ND, SD, IA, MN, WI, MI, KS, MO, IL, IN, and VA and (2) *materials and supplies used in the manufacture or distribution of commodities named in (1) above,* from Alton and Quincy, IL; St. Paul, Minneapolis, MN; Sioux City and Davenport, IA; Philadelphia, MS; Los Angeles, CA; Beloit, WI; Macon, GA; Pueblo, CO; Kansas City, MO; Birmingham, AL; and Sinking Springs, PA; and points in their respective commercial zones, to Platte County, NE. Supporting shipper: Lindsay Manufacturing Company, Inc., Box 156, Lindsay, NE 68601.

MC 11592 (Sub-5-6TA), filed December 9, 1980. Applicant: BEST REFRIGERATED EXPRESS, INC., P.O. Box 7365, 824 Livestock Exchange Bldg., Omaha, NE 68107. Representative: F. E. Myers, P.O. Box 7365, Omaha, NE 68107. *Meats, meat products, meat by-products and articles distributed by meat packing houses, as defined in Sections A and C of Appendix I to the report in Descriptions in Motor Carrier Certificates, 61 M.C.C. 209 and 766 (except commodities and hides in bulk, in tank vehicles).* From Hillsborough County in FL to points in GA, AL, LA, AR, MS, TN, KY and OH. Supporting shipper: Lykes Bros. Meat Company, P.O. Box 518, Plant City, FL 33566.

MC 114211 (Sub-5-22TA), filed December 10, 1980. Applicant: WARREN TRANSPORT, INC., P.O. Box 420, Waterloo, IA 50704. Representative: Adelor J. Warren, P.O. Box 420, Waterloo, IA 50704. *General commodities (except Classes A and B explosives, household goods as defined by the Commission, and commodities in bulk),* between points in the U.S. (except AK and HI). Restriction: Restricted to traffic originating at or destined to the facilities of or used by Ardan, Inc., Supporting shipper: Ardan, Inc., 2320 Euclid Avenue, Des Moines, IA 50310.

MC 114211 (Sub-5-23TA), filed December 10, 1980. Applicant: WARREN TRANSPORT, INC., P.O. Box 420, Waterloo, IA 50704. Representative: Adelor J. Warren, P.O. Box 420, Waterloo, IA 50704. *Such commodities as are dealt in or used by manufacturers and distributors of clay products,* from Henderson, TX, to points in IA, IL, MN, and NE. Supporting shipper: United

Brick and Tile, P.O. Box 654, Des Moines, IA 50303.

MC 114211 (Sub-5-24TA), filed December 10, 1980. Applicant: WARREN TRANSPORT, INC., P.O. Box 420, Waterloo, IA 50704. Representative: Adelor J. Warren, P.O. Box 420, Waterloo, IA 50704. *General commodities (except Classes A and B explosives and household goods as defined by the Commission),* between points in the U.S. Restriction: Restricted to the transportation of shipments from, to or between the facilities of or used by Northwestern Bell Telephone Co., Inc., or its affiliates. Supporting shipper: Northwestern Bell Telephone Co., Inc., 312 South Cliff Avenue, Sioux Falls, SD 57103.

MC 135797 (Sub-5-89TA), filed December 10, 1980. Applicant: J. B. HUNT TRANSPORT, INC., P.O. Box 130, Lowell, AR 72745. Representative: Paul R. Bergant, Esq. (address same as applicant). (1) *Filters, filter parts and water purifying compounds and* (2) *materials, equipment and supplies* used in the manufacture of (1) above, between OK and points in the U.S. (excpet AK and HI). Supporting shipper: Perry Filters, 6420 So. Air Depot, Oklahoma City, OK 73115.

MC 135797 (Sub-5-90TA), filed December 12, 1980. Applicant: J. B. HUNT TRANSPORT, INC., P.O. Box 130, Lowell, AR 72745. Representative: Paul R. Bergant, Esq. (address same as applicant). *Such commodities as are dealt in by wholesale and retail discount, variety and department stores,* between points in the U.S. (except AK and HI). Restricted to traffic moving for the account of E. S. Originals. Supporting shipper: E. S. Originals, Inc., 20 W. 33rd Street, New York, NY 10001.

MC 144510 (Sub-5-2TA), filed December 10, 1980. Applicant: JERRY J. KOBS, INC., 131 Bridge Court, Sgt. Bluff, IA 51054. Representative: Edward A. O'Donnell, 1004 29th Street, Sioux City, IA 51104. *Non-Exempt Food or Kindred Products, as described in Item 20 of the STCC Tariff* From Plymouth and Woodbury Ctys, IA, To points in CT, DC, DE, MA, MD, ME, NH, NJ, NY, PA, RI, VA, VT, WV.

MC 150008 (Sub-5-3TA), filed December 9, 1980. Applicant: KUELLA, INCORPORATED, a Missouri corporation, Route 2, King City, MO 64463. Representative: Lee Reeder, Michael A. Knepper, 1221 Baltimore Avenue, Suite 310, Kansas City, MO 64105. *Contract;* irregular: *Grass seed and fertilizer products* between points in the U.S. except AK and HI, under continuing contracts with Roll'n Grown Lawns, a Division of Memorial Heritage, Inc., Kansas City, MO. Supporting shipper: Roll'n Grow Lawns, 3125 Wyandotte, Kansas City, MO 64111.

MC 152021 (Sub-5-10TA), filed December 9, 1980. Applicant: IMPALA TRANSPORTATION SERVICES, INC., P.O. Box 678, Irving, TX 75060. Representative: Larry P. Cardin (same as applicant). *Contract;* irregular: *Iron and Steel Articles, NOI* (A) between Dallas, TX and all points in the continental U.S. under contract with Church and Clark, Inc., (B) between Lewisville, TX and all points in the continental U.S. under contract with Metal Art Stud, Inc. Supporting shippers: (A) Church and Clark Inc., 13561 Denton Drive, Dallas, TX 75234. (B) Metal Art Stud Inc., 208 Railroad Rd., Lewisville, TX 75067.

MC 152764 (Sub-5-1TA), filed December 10, 1980. Applicant: L. V. L. INC., P.O. Box 762, Jacksonville, AR 72076. Representative: Richard L. Vassar, President, L. V. L., Inc., P.O. Box 762, Jacksonville, AR 72076. *Household appliances, parts and accessories for household appliances, TV sets, recorders (tape or wire) parts and accessories for recorders, and materials and supplies used in the manufacture and distribution of all the above (except in bulk)* between Pulaski County, AR on the one hand and, on the other, points in LA, MS, NM, OK, and TX. Supporting shipper: Michael A. Roan, Supervisor-Transportation Services, General Electric Company, 6901 Lindsey Road, Little Rock, AR 72206.

MC 153010 (Sub-5-1TA), filed December 10, 1980. Applicant: HEAVY HAULING, INC., 1100 West Grand, Salina, KS 67401. Representative: Clyde N. Christey, KS Credit Union Bldg., 1010 Tyler, Suite 110L, Topeka, KS 66612. *Contract;* irregular: *Iron and steel articles* (Part 1) between the Denver, CO Commercial zone and points in WY, KS, NE, TX and MT. (Part 2) between points in Wyandotte County, KS and points in NE, OK, TX, MO, CO and the commercial zone of Salt Lake City, UT. (Part 3) from points in TX, IL, NE and IA to points in KS, CO, MO, NE, WY, MT and OK. (Part 4) between the commercial zone of Salt Lake City, UT and Wyandotte County, KS. Supporting shipper: Brown-Strauss Corp., a division of Azcon, 12075 E. 45th Ave., Denver, CO 80239. Brown-Strauss Corp., 14th & Osage Ave., Kansas City, KS.

MC 153061 (Sub-5-1TA), filed December 9, 1980. Applicant: JAMES A. SCHENKER d.b.a. MERCHANTS DELIVERY SERVICE, 1901 Hawthorne Street, Dubuque, IA 52001. Representative: Carl E. Munson, 469 Fischer Building, Dubuque, IA 52001. *General commodities (except classes A and B explosives), household goods as defined by the Commission, commodities in bulk, and those requiring special equipment,* between points in Carroll and Jo Davies Counties, IL; Dubuque County, IA; and Grant, IA and Lafayette Counties, WI. Restriction: Restricted to shipments having no single articles or package weighing in excess of 100 pounds, and which have a total weight of 500 pounds or less per shipment. Supporting shippers: 19.

MC 153067 (Sub-5-1TA), filed December 10, 1980. Applicant: BILL LUTZ and JOHN COPELAND d.b.a. J&B TRUCKING, 301 N. Main Street, Springfield, MO 65806. Representative: Bruce McCurry, Dickey, Allemann & McCurry, 910 Plaza Towers, Springfield, MO 65804. *General commodities except commodities in bulk, household goods, commodities of unusual value, commodities requiring special equipment or commodities injurious or contaminating to other freight* (restricted to shipments having a prior or subsequent movement by rail) between Springfield, MO on the one hand and points in AR and MO within 100 miles of Springfield, MO on the other hand. Supporting shipper: Teters Floral Products Co., Inc., 1425 South Lillian, Bolivar, MO 65613; Marcaro International, INc., 6200 North Hiawatha Avenue, Chicago, IL 60646.

MC 153079 (Sub-5-1TA), filed December 10, 1980. Applicant: INTER-AMERICAN EXPORT IMPORT CO., INC., Johnson Blvd., Ind. Park, Del Rio, TX 78840. Representative: Severino Sanchez Jr., 106 Hermosa, Del Rio, TX 78840. *Industrial equipment, agricultural implements, tractors components and complete units.* From IL, KY, OH, IN, TX, and MS, to the Mexican points of entry of Laredo, Eagle Pass, Del Rio, El Paso and Brownsville, TX, Nogalez, AZ. Suporting shipper: International Harvester Mexico S.A.. Apartado Postal 131, Saltillo, Coahuila, Mexico.

MC 153080 (Sub-5-1TA), filed December 10, 1980. Applicant: FREEDOM TRUCKING, INC., P.O. Box 68, Nowata, OK 74048. Representative: Larry D. Douglas, P.O. Box 711, Springdale, AR 72764. *Contract;* irregular: *Restaurant equipment and products used in the manufacturing thereof* between points in El Paso, TX, Jacksonville, AL, St. Louis, MO, Los Angeles, CA and Philadelphia, PA on the one hand and, on the other, points in the U.S. Supporting shipper: Falcon Products, Inc., 9387 Dielman Industrial Drive, St. Louis, MO 63132.

MC 153080 (Sub-5-2TA), filed December 12, 1980. Applicant:

FREEDOM TRUCKING, INC., P.O. Box 68, 125 Vinita Road, Nowata, OK 74048. Representative: Larry D. Douglas, P.O. Box 711, 135 E. Emma, Springdale, AR 72764. *Contract;* Irregular: *Frozen meats* from points in IA, NE, WI, MN, IL, IN, CA, and MO to the State of TX under contract for Agri-Energy Enterprises, Inc. Supporting shipper: Agri-Energy Enterprises, Inc., 8918 Tesoro, Suite 320, San Antonio, TX 78217.

MC 200 (Sub-5-69TA), filed December 12, 1980. Applicant: RISS INTERNATIONAL CORPORATION, P.O. Box 100, 215 W. Pershing Road, Kansas City, MO 64141. Representative: H. Lynn Davis (same as applicant). *General commodities, (except household goods as defined by the Commission, and classes A and B explosives),* between Chicago, IL and Flint, MI. Supporting shipper: J.C. Penney Co., Inc., 1301 Avenue of the Americas, NYC, NY 10019.

MC 200 (Sub-5-70TA), filed December 12, 1980. Applicant: RISS INTERNATIONAL CORPORATION, P.O. Box 100, 215 W. Pershing Road, Kansas City, MO 64141. Representative: H. Lynn Davis (same as applicant). *Lumber products (hardwood lumber, gunstock blanks, and walnut products),* between St. Joseph, MO, on the one hand, and, on the other, Ilion, NY. Restricted to shipments originating at or destined to facilities used by Iowa Missouri Walnut, its affiliates, suppliers, or vendors. Supporting shipper: Iowa Missouri Walnut, 2801 South 2nd, St. Joseph, MO 64503.

MC 18080 (Sub-5-1TA), filed December 12, 1980. Applicant: CONLEY TRUCK LINE, INC., P.O. Box 313, Wood River, NE 68883. Representative: John K. Walker, P.O. Box 313, Wood River, NE 68883. *Aluminum and plastic pipe; irrigation pipe and irrigation systems, and related articles; grain storage and grain drying equipment, grain augers and conveyors and related articles; iron, steel, and aluminum articles.* Between points in the State of NE on the one hand, and on the other, points in the U.S., except AK and HI. Supporting shippers: Heinzman Mfg., Co., West Highway 30 Grand Island, NE 68801, and Top Flite Corp. West Highway 34 Aurora, NE 68818.

MC 29910 (Sub-5-70TA), filed December 12, 1980. Applicant: ABF Freight System, Inc., 301 South Eleventh Street, Fort Smith, AR 72901. Representative: Joseph K. Reber (address same as applicant). *Common;* regular: *General commodities (except those of unusual value, Classes A and B explosives, household goods as defined by the Commission, commodities in bulk and those requiring special equipment),* between Shreveport, LA and Dallas, TX, over U.S. Hwy 80, serving all intermediate points. Supporting shipper: There are nine supporting shippers. Applicant intends to tack and interline.

MC 41116 (Sub-5-29TA), filed December 12, 1980. Applicant: FOGLEMAN TRUCK LINE, INC., P.O. Box 1504, Crowley, LA 70526. Representative: Byron Fogleman, P.O. Box 1504, Crowley, LA 70526. *Contract;* irregular: *General commodities (except household goods and class A and B explosives),* between points in the U.S. (except AK and HI), under continuing contract(s) with Boise Cascade Corporation. Supporting shipper: Boise Cascade Corporation, Assistant Manager—Transportation, Cost and Analysis, P.O. Box 7747, Boise, IA 83707.

MC 58902 (Sub-5-2TA), filed December 12, 1980. Applicant: MANLEY TRUCK LINE, INC., P.O. Box 1575 SSS, Springfield, MO 65806. Representative: Frank W. Taylor, Jr., 1221 Baltimore Ave., Suite 600, Kansas City, MO 64105. *Common;* regular: *General commodities (except household goods as defined by the Commission and Classes A and B explosives),* between Joplin, MO and Fort Smith, AR, serving no intermediate points by operating from Joplin over U.S. Hwy 71 to Fort Smith, and return over the same route. Applicant proposes to serve the commercial zones of Joplin, MO and Fort Smith, AR and proposes to tack at Joplin, MO and to interline. There are 22 supporting shippers.

MC 102567 (Sub-5-16TA), filed December 12, 1980. Applicant: McNAIR TRANSPORT, INC., 4295 Meadow Lane, Bossier City, LA 71111. Representative: Mr. Joe C. Day, Vice President—Traffic, 13403 Northwest Hwy., Suite 130, Houston, TX 77040. *Sodium Hydrosulfide, in bulk, in tank vehicles,* from Big Lake, TX and Wynnewood, OK, to all points in FL. Supporting shipper: T & T Chemical, P.O. Box 782, El Dorado, AR 71730.

MC 111170 (Sub-5-8TA), filed December 12, 1980. Applicant: WHEELING PIPE LINE, INC., 301 N. Washington, El Dorado, AR 71730. Representative: Dennis Ledet (same address as applicant). *Hazardous Waste,* between El Dorado, AR and points in the U.S. Supporting shipper: Ensco, Inc., P.O. Box 1975, El Dorado, AR 71730.

MC 111401 (Sub-5-24TA), filed December 12, 1980. Applicant: GROENDYKE TRANSPORT, INC., 2510 Rock Island Blvd., P.O. Box 632, Enid, OK 73701. Representative: Victor R. Comstock, Vice President, Traffic (same as above). *Flour, in bulk, in tank vehicles,* from Enid, OK to Springfield, IL. Supporting shipper: The Pillsbury Company, 515 E. Spruce, Enid, OK 73701.

MC 117119 (Sub-5-45TA), filed December 12, 1980. Applicant: WILLIS SHAW FROZEN EXPRESS, INC., P.O. Box 188, Elm Springs, AR 72728. Representative: L. M. McLean (same address as applicant). *Chemicals, blood analysis instruments, supplies, and parts (except commodities in bulk)* from Houston, TX to Atlanta, GA. Supporting shipper: Hycel, Inc., P.O. Box 36329, Houston, TX 77036.

MC 117119 (Sub-5-46TA), filed December 12, 1980. Applicant: WILLIS SHAW FROZEN EXPRESS, INC., P.O. Box 188, Elm Springs, AR 72728. Representative: L. M. McLean (same address as applicant). *Foodstuffs (except in bulk)* from Biloxi, MS to points in AZ, CA, NM, NV, and UT. Supporting shipper: DeJean Packing Company, P.O. Box 509, Biloxi, MS 39533.

MC 119399 (Sub-5-37TA), filed December 12, 1980. Applicant: CONTRACT FREIGHTERS, INC., P.O. Box 1375, 2900 Davis Boulevard, Joplin, MO 64801. Representative: Thomas P. O'Hara (same address as applicant). *Tires pneumatic, NOI, inner tubes, flaps and liners,* from Charlotte, NC to points in AZ and CO. Supporting shipper: Discount Tire Co., Inc., 4711 E. Cactus Rd., Phoenix, AZ 85032.

MC 120302 (Sub-5-4TA), filed December 12, 1980. Applicant: KNOX TRUCK LINES, INC., P.O. Box 12226, Grand Prairie, TX 75051. Representative: D. Paul Stafford, P.O. Box 45538, Dallas, TX 75245. *Iron and steel articles;* between points in AL, AR, CO, KS, LA, NM, OK, and TX. Restricted to traffic originating at or destined to the facilities of Zelrich, Dallas, and Houston, TX, and Central Metals, Houston, TX. Supporting shipper: Zelrich Steel Company, Inc., P.O. Box 29667, Dallas, TX 75229, 8807 Old Liberty Road, Houston, TX and Central Metals, P.O. Box 40114, Houston, TX 77040.

MC 124174 (Sub-5-33TA), filed December 12, 1980. Applicant: MOMSEN TRUCKING CO., 13811 "L" Street, Omaha, NE 68137. Representative: Karl E. Momsen, 13811 "L" Street, Omaha, NE 68137. *Ferrous and non-ferrous metal products having value for remelting and recycling purposes only,* between all points in the USA for the shipper, Metalsco, Inc. Supporting shipper(s): Metalsco, Inc., 111 West Port Plaza, St. Louis, MO 63141.

MC 126118 (Sub-5-40TA), filed December 12, 1980. Applicant: CRETE CARRIER CORPORATION, P.O. Box

81228, Lincoln, NE 68501. Representative: David R. Parker, (same address as applicant). *Printed matter, machinery, and supplies,* between Birmingham, AL, on the one hand, and, on the other, pts in the U.S. (except AK and HI). Supporting shipper: Wayne Dees Mailing Service, Inc., Wayne Dees, President, 2605 Commerce Blvd., Birmingham, AL 35210.

MC 127306 (Sub-5-3TA), filed December 12, 1980. Applicant: M. W. McCURDY & CO., 401 Nora's Lane, Houston, TX 77022. Representative: Daniel O. Hands, Attorney at Law, Blanshan & Summerfield, Suite 200, 205 W. Touhy Ave., Park Ridge, IL 60068. *Meat,* from the facilities of Portion-Trol Foods, Inc. at or near Mansfield, TX to Haywood, CA and points in its Commerical Zone, restricted to the transportation of traffic originating at the named origin and destined to the named destination. Supporting shipper: Portion-Trol Foods, Inc., 812 S. 5th Avenue, Mansfield, TX 76063.

MC 129032 (Sub-5-7TA), filed December 12, 1980. Applicant: TOM INMAN TRUCKING, INC., 5656 South 129th East Ave., Tulsa, OK 74145. Representative: Jerry Garland (same address as applicant). *Such items as are dealt in manufacturing and distribution of chemicals and related articles,* from Coffeyville, KS to Portland, OR; Phoenix, AZ; Olympia, WA; Seattle, WA; Salt Lake City, UT; San Diego, CA; Los Angeles, CA; Emeryville, CA; Calexico, CA; and Tuscon, AZ. Supporting shipper: The Sherwin Williams Chemicals, P.O. Box 855, Coffeyville, KS 67337.

MC 129134 (Sub-5-1TA), filed December 12, 1980. Applicant: BILL CARLYLE and HOWARD BARLOW d.b.a. SAFEWAY VAN LINES, 600 N Main Street, Warrensburg, MO 64093. Representative: Bill Carlyle, P.O. Box 25, Warrensburg, MO 64093. *Household goods, as defined by the Commission,* between points in Hickory and St. Clair Counties, MO., for the purpose of packing and crating. Applicant intends to TACK. Supporting shipper: None.

MC 136888 (Sub-5-1TA), filed December 12, 1980. Applicant: NORMAN & SON, INC., 7255 Avenue N, Houston, TX 77011. Representative: Timothy Mashburn, P.O. Box 2207, Austin, TX 78768. *Asphalt and asphalt chunks, in dump vehicles,* between points in TX and LA. Supporting shipper: Imco Services, A Division of Halliburton Co., P.O. Box 22605, Houston, TX 77027; and Leanna Corporation, 1100 Milam Bldg., Suite 2170, Houston, TX 77002.

MC 138469 (Sub-5-31TA), filed December 11, 1980. Applicant: DONCO CARRIERS, INC., P.O. Box 75354, Oklahoma City, OK 73107. Representative: Jack H. Blanshan, Suite 200, 205 W. Touhy Avenue, Park Ridge, Il 60068. *Such commodities as are dealt in or used by confectioners (except commodities in bulk),* between points in the United States (except AK and HI), restricted to the transportation of traffic originating at or destined to the facilities of Pangburn Co. Supporting shipper: Pangburn Co., P.O. Box 15050, Ft. Worth, TX 76119.

MC 138627 (Sub-5-8TA), filed December 12, 1980. Applicant: SMITHWAY MOTOR XPRESS, INC., P.O. BOX 404, Fort Dodge, IA 50501. Representative: Arlyn L. Westergren, Westergren & Hauptman, P.C., Suite 201, 9202 West Dodge Road, Omaha, NE 68114. *Iron and steel articles* between the facilities of North Star Steel Company at Monroe, MI, on the one hand, and, on the other, points in AR, CO, IL, IN, IA, KS, KY, MI, MN, MO, NE, ND, OH, OK, SD, TN, TX, WI, and WY. Supporting shipper: North Star Steel Company, 2901 Metro Drive, Minneapolis, MN 55420.

MC 145500 (Sub-5-1TA), filed December 12, 1980. Applicant: EAST TEXAS CARTAGE CO., 3300 West Front Street, Tyler, TX 75711. Representative: Harry F. Horak, Suite 115, 5001 Brentwood Stair Road, Fort Worth, TX 76103. Common; regular: *general commodities* (except those of unusual value, Classes A and B explosives, household goods as defined by the Commission, commodities in bulk, and those requiring special equipment), (1) from Mt. Pleasant, TX via U.S. 271 to I-30, thence via I-30 to Texarkana, AR, and return, serving all intermediate points; (2) from Texarkana, AR via U.S. 59 to Atlanta, TX, and return, serving all intermediate points; (3) from Mt. Pleasant, TX via U.S. 271 to U.S. 67, thence via U.S. 67 to TX 77, thence via TX 77 to Atlanta, TX, and return, serving all intermediate points; and (4) from Pittsburg, TX via TX 11 to Linden, TX, thence via U.S. 59 to Atlanta, TX, and return, serving all intermediate points. Applicant intends to serve the commercial zone of each authorized point. Supporting shipper(s): There are 8 supporting shippers.

Note.—Applicant intends to tack and interline.

MC 146055 (Sub-5-8TA), filed December 12, 1980. Applicant: DOUBLE "S" TRUCKLINE, INC., 731 Livestock Exchange Building, Omaha, NE 68107. Representative: James F. Crosby, James F. Crosby & Associates, 7363 Pacific Street, Oak Park Office Building, Suite 210B, Omaha, NE 68114. *Meats, and packinghouse products,* from the facilities of Dubuque Packing Co., Omaha, NE to points in AZ, CA, FL, GA, IL, IN, KY, MN, NV, OR, TX, and WA. Supporting shipper: Dubuque Packing Co., 4003 Dahlman Avenue, Omaha, NE 68107.

MC 146078 (Sub-5-18TA), filed December 12, 1980. Applicant: CAL-ARK, INC., 854 Moline, P.O. Box 610, Malvern, AR 72104. Representative: John C. Everett, 140 E. Buchanan, P.O. Box A, Prairie Grove, AR 72753. *Metal containers,* from the facilities of the Thompson Can Company at or near Dallas, TX, to all points and places in AR, OK, MS, LA, and TN. Supporting shipper: Thompson Can Company, 13401 Denton Drive, Dallas, TX 75234.

MC 147147 (Sub-5-1TA), filed December 12, 1980. Applicant: RONALD R. CREED, R.R. 1, Bern, KS 66408. Representative: Clyde N. Christey, Ks Credit Union Bldg., 1010 Tyler, Suite 110L, Topeka, KS 66612. *Rock, crushed rock and lime,* from points in Pawnee and Richardson County, NE to points in Washington, Nemaha, Marshall and Brown Counties, KS. Supporting shipper: Martin Marietta Aggregates, Burchard, NE 68323.

MC 147348 (Sub-5-4TA), filed December 11, 1980. Applicant: SOUTHWEST FREIGHT DISTRIBUTORS, INC., 1320 Henderson, North Little Rock, AR 72114. Representative: James M. Duckett, 411 Pyramid Life Building, Little Rock, AR 72201. *Such commodities as are dealt in by wholesale, retail and variety discount stores* (except in bulk), (1) from the facilities of Warner-Lambert Company, at Grand Prairie, TX, and (2) from the facilities of Bristol-Myers Company and its subsidiaries, at Dallas, TX to all points in AR.

MC 148832 (Sub-5-5TA), filed December 11, 1980. Applicant: DELTA MOTOR FREIGHT, INC., 1616 Rowe Blvd., P.O. Box 1083, Poplar Bluff, MO 63901. Representative: Ronald D. Dodds, 161 Rowe Boulevard, Poplar Bluff, MO 63901. *Common* regular *General commodities (except those of unusual value, classes A and B explosives, household goods as defined by the Commission, commodities in bulk, those requiring special equipment and those injurious to other lading),* (1) between Kansas City, MO and its commercial zone, on the one hand, and, on the other Poplar Bluff, MO and its commercial zone serving the intermediate points between Seymour, MO and Fremont, MO and their commercial zones as follows: (1) From Kansas City over U.S.

Hwy. 71 to its junction with MO State Hwy. 7 then over MO State Hwy. 7 to its junction with MO State Hwy. 13 then over MO Hwy. 13 to its junction with U.S. Hwy. 60 then over U.S. Hwy. 60 to Poplar Bluff, and return over the same routes. Supporting shipper: There are 50.

Note.—Applicant proposes to tack and interline.

MC 149031 (Sub-5-1TA), filed December 12, 1980. Applicant: WLD, LTD., Route 4, Fairfield, IA 52556. Representative: Richard D. Hoadley, 121 North Court, Fairfield, IA 52556. Contract; Irregular. *Iron and steel articles, automotive and machinery parts, shipping cartons, industrial equipment and supplies* between points in the U.S., under continuing contracts with Rockwell International Corp., Fairfield, IA. Supporting shipper: Rockwell International Corporation, 1081 West Stone Avenue, Fairfield, IA 52556.

MC 150578 (Sub-5-19TA), filed December 12, 1980. Applicant: STEVENS TRANSPORT, a Division of STEVENS FOODS, INC., 2944 Motley Drive, Suite 302, Mesquite, TX 75150. Representative: E. Lewis Coffey (same address as applicant). *Alcoholic beverages (except in bulk),* between points in AL, AZ, AR, CA, CO, CT, DE, DC, FL, GA, ID, IL, IN, IA, KS, KY, LA, ME, MD, MA, MI, MN, MS, MO, MT, NE, NV, NH, NM, NY, NC, ND, OH, OK, OR, PA, RI, SC, SD, TN, TX, UT, VT, VA, WA, WV, WI, WY, on the one hand, and, on the other, points in NJ. Restricted to traffic originating at or destined to facilities of Fedway Associates, Inc. Supporting shipper: Fedway Associates, Inc., Bldg. 56, Port Kearny, P.O. Box 519, Kearny, NJ 07032.

MC 150645 (Sub-5-5TA), filed December 12, 1980. Applicant: TILEWAYS, INC., 7834 C. F. Hawn Freeway, Dallas, TX 75217. Representative: Lawrence A. Winkle, P.O. Box 45538, Dallas, TX 75245. Contract; irregular; *articles as dealt in by wholesale and retail chain grocery discount houses* from points in WI and MN to points in TX. Supporting shipper: Cullum Company, Inc., 14303 Inwood, Dallas, TX 75234.

MC 151978 (Sub-5-2TA), filed December 12, 1980. Applicant: ASSOCIATED VAN AND STORAGE CO., INC., 2421 Jefferson, Lawton, OK 73505. Representative: Kenneth M. Hughen, 111 Camelot Drive, Lawton, OK 73501. *Used household goods, personal effects, and baggage* between points in Comanche County, OK and between points in Comanche County, OK on the one hand, and, on the other hand, points in Caddo, Carter, Garvin, Grady, McClain, Murry, and Stephens counties, OK. Supporting shipper: Paramount Forwarders, Inc., 3164 Springfield, P.O. Box 809, DeSota, TX 75115; Lyon Household Shipping, Inc., P.O. Box 78004, Los Angeles, CA 90016.

MC 152813 (Sub-5-1TA), filed December 12, 1980. Applicant: FRESH EXPRESS, INC., 55 Produce Row, St. Louis, MO 63102. Representative: Vincent D. Vogler, Jr., 818 Olive, Suite 1100, St. Louis, MO 63101, (314) 241-8250. *General Commodities (except household goods as defined by the Commission, hazardous or secret materials, and sensitive weapons and munitions),* between St. Louis, MO and the following points and their commercial zones: Compton, City of Industry, San Francisco, Los Angeles and Tuskin, CA; Jacksonville, Miami and Tampa, FL; Phoenix, AZ; Portland, OR; Seattle, WA; Dallas, Fort Worth and Houston, TX. Supporting shippers: So-Good Potato Chip Co., 4190 Hoffmeister, St. Louis, MO 63125. W. K. Manufacturing Corp., Rt. 4, Arnold, MO 63010. Lever Brothers Company, 1400 N. Pennsylvania Ave., St. Louis, MO 63133. Purex Co., 6901 McKissock, St. Louis, MO 63141. Chemtech Industries, 139 E. Soper Street, St. Louis, MO 63102.

MC 153129 (Sub-5-1TA), filed December 12, 1980. Applicant: GENE FENTON, INC., 213 Hillcrest Drive, Audubon, IA 50025. Representative: James F. Crosby & Associates, 7363 Pacific Street, Suite 210B, Omaha, NE 68114. *Meats, and packinghouse products,* from Spencer Foods Division Land O'Lakes, Oakland, IA to Elburn, IL and Chicago, IL (and points in their commercial zones). Supporting shipper: Spencer Foods, Inc., P.O. Box 544, Schuyler, NE 68661.

MC 153130 (Sub-5-1TA), filed December 12, 1980. Applicant: MERSCHMAN TRUCKING CORPORATION, P.O. Box 67, West Point, IA 52656. Representative: Gregory J. Humphrey, Deitchler, Thomas, Saunders, Krogmeier, Humphrey & Johnson, 627 Avenue G, Fort Madison, IA 52627. *Fertilizers and fertilizer ingredients, and fertilizer equipment and agricultural equipment and parts and accessories* between points in: IA, IL, MO, IN, KY, TN, AL, MS, AR, KS, NE, SD, ND, MN, WI, MI, for Seed and Fertilizer, Inc. Supporting shipper: Merschman Seed & Fertilizer, Inc., P.O. Box 67, West Point, IA 52656.

MC 153133 (Sub-5-1TA), filed December 12, 1980. Applicant: TRANS AMERICAN TRANSPORTATION SYSTEM INC., Highway 59 South, Post Office Box 422, Stafford, TX 77477. Representative: Patricia L. Altman, 2523 Avenue H, Rosenberg, TX 77471. *(1) Iron and Steel Articles, Pipe and related commodities,* between points in OK, and NM, and (2) *Iron and Steel Articles, Pipe and related commodities,* between points in TX, on the one hand, and points in OK, and NM, on the other hand. Supporting shipper: CK Fabricators, Rt. 3, Box 97, Mineral Wells, TX 76067.

MC 153135 (Sub-5-1TA), filed December 12, 1980. Applicant: JOHN DRENNON AND SONS COMPANY, INC., 353 North Nettleton, Springfield, MO. 65802. Representative: Thomas P. Rose, Attorney at Law, P.O. Box 205, Jefferson City, MO. 65102. *Telephone Equipment, Materials and Supplies used in the Construction and Maintenance of Telephone Systems* between Springfield, Mo. and its commercial zone, on the one hand, and on the other, points in Mo. Supporting shipper: Western Electric, 1111 Woods Mill road, Ballwin, Mo. 63011. Applicant intends to interline.

THE FOLLOWING APPLICATIONS WERE FILED IN REGION 6. SEND PROTESTS TO: INTERSTATE COMMERCE COMMISSION, REGION 6 MOTOR CARRIER BOARD, P.O. BOX 7413, SAN FRANCISCO, CA 94120.

MC 153041 (Sub-6-1TA), filed December 8, 1980. Applicant: ACTIVE TRANSFER, INC., 501 Hwy. 99 N., Eugene, OR 97402. Representative: Philip G. Skofstad, 1525 N.E. Weidler, Portland, OR 97232. *Contract carrier:* Irregular routes: *Iron & steel, fabricated iron & steel, steel beams, steel trusses, sawmill equipment, iron & steel buildings* and *steel towers,* between Eugene, OR on the one hand, and, on the other, points in OR, WA, CA, and ID for the account of Great Western Steel Fabricators, Inc. for 270 days. Supporting shipper: Great Western Steel Fabricators, Inc., 2490 Hwy. 99 N., Eugene, OR 97402.

MC 116544 (Sub-6-23TA), filed December 5, 1980. Applicant: ALTRUK FREIGHT SYSTEMS, INC., 1703 Embarcadero Road, Palo Alto, CA 94303. Representative: Richard G. Lougee, P.O. Box 10061, Palo Alto, CA 94303. *Furniture parts, metal products, paper products and materials, equipment and supplies used in the manufacture, transportation and installation thereof* between Mason (Warren Co), OH; Nicholasville (Jessamine Co), KY; Simpsonville (Shelby Co), KY; and Winchester (Clark Co), KY, on the one hand, and, on the other, points in AL, FL, GA, IL, MS, MO, NJ, NY, OH, PA and TX, restricted to shipments originiating at or destined to the facilities of Leggett and Platt for 270 days. An underlying ETA seeks 120 days authority. Supporting shipper: Leggett & Platt, Inc., P.O.B. 757, Carthage, MO 64836.

MC 116544 (Sub-6-24TA), filed December 5, 1980. Applicant: ALTRUK FREIGHT SYSTEMS, INC., 1703 Embarcadero Rd., Palo Alto, CA 94303. Representative: Richard G. Lougee, P.O.B. 10061, Palo Alto, CA 94303. *Animal feed, feed ingredients and such commodities as are dealt in or used by manufacturers of animal feed* between points in the U.S., restricted to shipments originating at or destined to the facilities of Kal Kan Foods for 270 days. An underlying ETA seeks 120 days authority. Supporting shipper: Kal Kan Foods, Inc., 3386 E. 44th St., Vernon, CA 90058.

MC 63562 (Sub-6-13TA), filed December 5, 1980. Applicant: BN TRANSPORT, INC., P.O. Box 22684—Wellshire Station, Denver, CO 80222. Representative: Cecil L. Goettsch, 1100 Des Moines Building, Des Moines, IA 50307. *Steel tubing* from Clinton, IA to points in AZ, AR, CO, IL, IN, KS, KY, LA, MI, MN, MO, MT, NE, NM, ND, OH, OK, SD, TX, and WY for 270 days. Supporting shipper: Central Steel Tube Company, Clinton, Iowa 52733.

MC 25869 (Sub-6-1TA), filed December 8, 1980. Applicant: C.O.D.E., INC., 4800 North Colorado Blvd., Denver, CO 80216. Representative: Donald L. Stern, Suite 610, 7171 Mercy Rd., Omaha, NE 68106. *General Commodities (except household goods as defined by the Commission and Classes A and B explosives),* between Monroe County, NY; DuPage County, IL; and Weld County, CO, for 270 days. Supporting shipper: Eastman Kodak Company, 2400 Mt. Read Boulevard, Rochester, NY 14650.

MC 153035 (Sub-6-1TA), filed December 8, 1980. Applicant: CALIFORNIA INDUSTRIAL PRODUCTS, INC., 11525 Shoemaker Avenue, Santa Fe Springs, CA 90670. Representative: Robert G. Ames (same address as applicant). *General Commodities (with usual restrictions),* moving on Freight Forwarders bills of lading, restricted to shippers moving on Acme ABC-TNT, Trans National Transport, bills of lading, between points in CA, AZ, NM, TX, OK, AR, IA, TN, and KY, for 270 days. Supporting shipper: ABC-TNT Acme Fast Freight, Inc., 2110 Alhambra Avenue, Los Angeles, CA 90031.

MC 153039 (Sub-6-1TA), filed December 8, 1980. Applicant: CARAVEAU'S HOT SHOT SERVICE, 302 No. 6th Ave., Casper, WY 82601. Representative: Roger D. Adamson, Box 1594, Mills, WY 82644. *(1) Machinery, material, equipment and supplies used in, or in connection with the discovery, development, production, refining, manufacture, processing, storage, transmission and distribution of natural gas and petroleum and their products and by-products and (2) Machinery, materials, equipment and supplies used in or in connection with the construction, operation, repair, servicing, maintenance and dismantling of pipelines, including the stringing and picking up thereof* between points in WY, CO, ND, ID, SD, MT, UT and NM, for 270 days. Supporting shippers: There are 12 supporting shippers whose statements may be examined at the regional office listed.

MC 133828 (Sub-6-1TA), filed December 4, 1980. Applicant: CASAZZA TRUCKING CO., 1250 Glendale Avenue, Sparks, NV 89431. Representative: Robert G. Harrison, 4299 James Drive, Carson City, NV 89701. (1) *Gasoline, Diesel Fuel, Heating Oil and Lubricating Oils,* in bulk, in tank vehicles, and in metal containers, between points in and South of Monterey, Kings, Tulare and Inyo Counties, CA, Clark, Linclon and Nye Counties, NV and points in AZ, (2) *Construction, Logging and Mining Machinery, Equipment and Supplies,* and parts and materials when moving in the same shipments with such Machinery, Equipment and Supplies, between points in Monterey, Kings, Tulare and Inyo Counties, CA, Clark, Lincoln and Nye Counties, NV and points in AZ, OR, WA, CO and WY, for 270 days. Supporting shippers: There are 5 shippers. Their statements may be examined at the Regional office listed.

MC 7228 (Sub-6-2TA), filed December 5, 1980. Applicant: COAST TRANSPORT, INC., 1906 S.E. 10th Avenue, Portland, OR 97214. Representative: Jerry Cinnfra (same address as applicant). *Contract carrier,* irregular routes, *Frozen Bakery Goods, NOI and Foodstuffs, materials and supplies* used in the processing or distribution of foodstuffs; from, to, or between the following points or areas: Mrs. Smith's Frozenfoods Co. facilities, plants at Pottstown, PA, McMinnville, or, San Jose, CA, Atlanta, GA, Blue Anchor, NJ, Zeeland, MI; distribution whses at Philadelphia, PA, Fogelsville, PA, Lake Winola, PA, Jersey City, NJ, Syracuse, NY, Atlanta, GA, Tampa, FL, Dallas, TX, Lyons, IL, Denver, CO, Portland, or, San Francisco, CA, Los Angeles, CA and points in the U.S. for 270 days. Supporting shipper: Mrs. Smith's Frozen Foods Co., P.O. Box 298, Pottstown, PA 19464.

MC 56640 (Sub-6-8TA), filed December 5, 1980. Applicant: DELTA LINES, INC., 333 Hegenberger Road, Oakland, CA 94621. Representative: Kirk Wm. Horton, Wells Fargo Bank Building, Suite 400, 333 Hegenberger Road, Oakland, CA 94621. *Nonexempt food or kindred products,* between Sacramento County, CA, on the one hand, and, on the other, points in ID, MT, and UT, for 270 days. An underlying ETA seeks 120 day's authority. Supporting shipper: Campbell Soup Company, P.O. Box 1406, Sacramento, CA 95831.

MC 147702 (Sub-6-1TA), filed December 5, 1980. Applicant: DOUBLE AA PARKING & TRUCKING, INC., 465 W. Second St., Calexico, CA 92231. Representative: Arturo Rioseco (same as applicant). *Contract Carrier,* irregular routes: *Wheel rims, centers and shop supplies,* between Harbor City, CA, and U.S. Border at Calexico, CA, for the account of Appliance Industries, Inc. for 270 days. Supporting shipper: Appliance Industries, Inc., 23920 S. Vermont Ave, Harbor City, CA 90710.

MC 119038 (Sub-6-1TA), filed December 5, 1980. Applicant: EAGLE TRANSFER CO., INC., P.O. Box 617, Wenatchee, WA 98801. Representative: Jack R. Davis, 1100 IBM Building, Seattle, WA 98101. *General commodities* (except automobiles, commodities in bulk in tank type equipment and Classes A&B explosives) between points in Chelan, Okanogan, Grant, Douglas and Kittitas Counties, WA on the one hand, and, on the other, points in the State of WA, restricted to shipments having a prior or subsequent movement by rail, for 270 days. Supporting shipper: Pacific Northwest Perishable Shippers Association, P.O. Box C19075, Seattle, WA 98119.

MC 125433 (Sub-6-46TA), filed December 4, 1980. Applicant: F-B TRUCK LINE COMPANY, 1945 So. Redwood Rd., Salt Lake City, UT 84104. Representative: John B. Anderson (same as applicant). *Plumbing fixtures, materials, equipment and supplies* used in the manufacture, distribution and sales of the above commodities, between points in CA, FL, IL, IN, KY, MI, NV, and OK, on the one hand, and, on the other, points in the U.S. (except AK and HI), for 270 days. Supporting shipper: Delta Faucet Company, Route 46W, Greensburg, IN 47240.

MC 152549 (Sub-6-2TA), filed December 3, 1980. Applicant: BOB GARCIA d.b.a. B. GARCIA TRUCKING, 16234 Mallory Drive, Fontana, CA 92335. Representative: Donald R. Hedrick, P.O. Box 88, Norwalk, CA 90650. *Contract carrier,* Irregular routes: *Beer,* from Los Angeles, CA and its commercial zone, to Grand Junction, CO, for the account of Hub Distributing Co., for 270 days. Supporting shipper: Hub Distributing Co., 131 N. Spruce St., Grand Junction, CO 81501.

MC 152625 (Sub-6-1TA), filed December 5, 1980. Applicant: GERALD G. GEER d.b.a. GEER BROS. TRUCKING, 3912 Park Dr., Olympia, WA 98502. Representative: Jim Pitzer, 15 S. Grady Way—Suite 321, Renton, WA 98055. *Contract Carrier,* Irregular routes: *Coal,* in end dump or bottom dump equipment, from Kent, WA to Toledo, OR, for 270 days. An underlying ETA seeks 120 days authority. Supporting shipper: Morris & Sons, Inc., 21810 76th S. Kent, WA 98031.

MC 152814 (Sub-6-1TA), filed December 4, 1980. Applicant: GOOD TABLES, INC., 1118 E. 223rd St., Carson, CA 90745. Representative: Jim Pitzer 15 S. Grady Way—Suite 321, Renton, WA 98055. *Contract Carrier,* irregular routes: *General Commodities* (excluding classes A and B explosives, and household goods) from the Seattle, WA commercial zone to points in CA, for 270 days. An underlying ETA seeks 120 days authority. Supporting shipper: Puget Sound Shippers Association, P.O. Box 68927, Seattle, WA 98188.

MC 146411 (Sub-6-1TA), filed December 5, 1980. Applicant: KMD, INC., 18628 72nd Ave. S., Kent, WA 98301. Representative: Rebecca L. Bogard, 2000 IBM Bldg., Seattle, WA 98101. *Contract carrier;* irregular routes: *automotive mufflers, exhaust pipes, tail pipes, shock absorbers and related automotive parts,* as described in STCC Group 37, from the facilities of Midas International in Woodland, CA, to points in the U.S. for 270 days. Supporting shipper: Sounder Exhaust, INC., d.b.a. Midas Muffler Shops, 1120 Lind Ave. S.W., Renton, WA 98055; Silence, Inc., d.b.a. Midas Muffler Shops, 12360 Lake City Way N.E., No. 307, Seattle, WA 98125.

MC 147662 (Sub-6-2TA), filed December 8, 1980. Applicant: KMC TRANSPORT, INC., P.O. Box 962, Caldwell, ID 83605. Representative: Bradford E. Kistler, P.O. Box 82028, Lincoln, NE 68501. *Contract,* irregular. *Such commodities as are dealt in or used by manufacturers of mobile homes,* between the facilities of Kit Manufacturing Company at or near Caldwell, ID, on the one hand, and, on the other, points in WA, OR, NV, UT, WY, ID, and MT, under a continuing contract(s) with Kit Manufacturing Company of Caldwell, ID, for 270 days. Supporting shipper: Kit Manufacturing Company, P.O. Box 962, Caldwell, ID 83605.

MC 129951 (Sub-6-3TA), filed December 2, 1980. Applicant: HARLEY I. KEETER, JR., 6379 Valmont Dr., Boulder, CO 80301. Representative: Harley I. Keeter, Jr. (same address as applicant). *Coal,* from Jackson County, CO to Carbon County, WY for 270 days. Supporting shipper: Wyoming Fuel Co., 12055 W. 2nd Place, Lakewood, CO 80205. An underlying ETA seeks 120 days authority.

MC 150528 (Sub-6-2TA), filed December 2, 1980. Applicant: SOON LEE, MILTON LEE & DENNIS LEE, d.b.a. LEE & LEE, P.O. Box 528, Woodland, CA 95695. Representative: J. H. Gulseth, 100 Bush Street—21st Floor, San Francisco, CA 94104. *Contract Carrier,* Irregular routes: *Cooked, cured or preserved meats and sausage,* in mechanically refrigerated trailers, between Sacramento, CA, on the one hand, and, on the other, White City and Eugene, OR for the account of Made-Rite Prepared Meats, Inc., for 270 days. An underlying ETA seeks 120 days authority. Supporting shipper: Made-Rite Prepared Meats, Inc., 3353 Second Ave., Sacramento, CA.

MC 153011 (Sub-6-1TA), filed December 5, 1980. Applicant: JOHN H. MANLEY, d.b.a. MANLEY'S TRANSPORT, 447 S. Olympia Way, Orange, CA 92669. Representative: Milton W. Flack, 8383 Wilshire Blvd., Suite 900, Beverly Hills, CA 90211. *Contract Carrier,* Irregular routes: *General commodities* (except those of unusual value, classes A and B explosives, household goods as defined by the Commission, commodities in bulk, and those requiring special equipment), between points in CA, on the one hand, and points in GA, IN, IL, KY, MO, NJ, NY, OH, OK, PA and TX, on the other hand, for the accounts(s) of Acme Fast Freight, Inc., for 270 days. Supporting shipper: Acme Fast Freight, Inc., Jay Harn, Vice President, 2110 Alhambra, Los Angeles, CA 90031.

MC 138237 (Sub-6-3TA), filed December 8, 1980. Applicant: METRO HAULING, INC., POB 88824, Tukwila Branch, Seattle, WA 98188. Representative: John A. Anderson, Suite 1600—One Main Pl., 101 SW Main St., Portland, OR 97204. *Aluminum ingots* from points in Flathead County, MT, to points in King and Pierce Counties, WA and Multnomah County, OR, for 270 days. Supporting shipper: Anaconda Aluminum, POB 32860, Louisville, KY 40232.

MC 98979 (Sub-6-1TA), filed December 4, 1980. Applicant: MILLER BROS., INC., 306 North 8th Ave., Greeley, CO 80631. Representative: Charles J. Kimball, Suite 350, 1600 Sherman, Denver, CO 80203. Irregular routes: *General commodities* (except commodities in bulk, Classes A and B explosives, household goods as defined by the Commission, and commodities which, because of size and weight require the use of special equipment). (1) Between Denver, CO and The Rawhide Energy Project of The Platte River Power Authority located at or near Buckeye, CO, serving the intermediate and off-route points of Loveland, Ft. Collins, Wellington, Livermore, and Red Feather Lakes, (a) From Denver over Interstate Hwy 25 (also U.S. Hwy 87) to junction Colorado Hwy 14, thence over Colorado Hwy 14 to junction U.S. Hwy 287, thence over U.S. Hwy 287 to junction of County Road No. 9 aka Buckeye Road, near Livermore, CO, and thence over Buckeye Road to junction with County Road No. 82, thence over County Road No. 82 to The Rawhide Energy Project of The Platte River Power Authority and return over the same route, (b) From Denver over U.S. Hwy 287 to junction of County Road No. 9 aka Buckeye Road near Livermore, CO, thence over Buckeye Road to junction with County Road No. 82, thence over County Road No. 82 to The Rawhide Energy Project of The Platte River Power Authority and return over the same route, (2) Between Denver, CO and Ault, CO, serving all intermediate points from Denver over U.S. Hwy 85 to Ault and return over the same route, (3) Between Ft. Collins, CO and The Rawhide Energy Project of The Platte River Authority located at or near Buckeye, CO, serving the off-route points of Livermore and Red Feather Lakes, CO, from Ft. Collins over U.S. Hwy 287 to the junction of County Road No. 9 aka Buckeye Road near Livermore, CO, thence over Buckeye Road to junction with County Road No. 82, thence over County Road No. 82 to The Rawhide Energy Project at The Platte River Authority for 270 days. Supporting shippers: There are 15 supporting shippers. Their statements may be examined at the Regional Office listed.

MC 129857 (Sub-6-6TA), filed December 3, 1980. Applicant: G.R.M., INC., d.b.a. PORT TERMINAL TRANSPORT, INC., 700 Henry Ford Ave., Long Beach, CA. Representative: Patricia M. Schnegg, 707 Wilshire, Suite 1800, Los Angeles, CA 90017. *Imported automobiles,* from Los Angeles County, CA to San Antonio, Houston and Austin, TX, for 270 days. Supporting shipper: PEUGEOT MOTORS OF AMERICA, INC., 1020 E. 230th St., Carson, CA 90745.

MC 143693 (Sub-6-3TA), filed December 4, 1980. Applicant: PROFICIENT FOOD COMPANY, 17872 Cartwright Rd., Irvine, CA 92705. Representatives: Floyd L. Farano, 2555 E. Chapman Ave., Suite 415, Fullerton, CA 92631; Alan F. Wohlstetter, 1700 K Street, N.W., Washington, D.C. 20006.

Contract Carrier; Irregular Routes: *Foodstuffs, Meat and Meat Products;* Between Orlando, FL, and Atlanta, GA. Supporting shipper: Geo. A. Hormel & Co., P.O. Box 800, Austin, MN 55912.

MC 143586 (Sub-6-1TA), filed December 8, 1980. Applicant: RANGEN TRANSPORTATION, INC., P.O. Box 706, Buhl, ID 83316. Representative: Bruce W. Shand, 430 Judge Building, Salt Lake City, UT 84111. *Animal by-products,* from Nampa, ID, to points in CA, OR, and WA, for 270 days. Applicant has filed an underlying ETA seeking up to 120 days authority. Supporting shipper: Armour and Company, Greyhound Tower, 111 West Clarendon, Phoenix, AZ 85077.

MC 153013 (Sub-6-1TA), filed December 5, 1980. Applicant: RONNEY L. ROGERS, d.b.a. R. L. ROGERS TRUCKING, Rt. 1, B 1724, Clatskanie, OR 97016. Representative: Lawrence V. Smart, Jr., 419 N.W. 23rd Ave., Portland, OR 97210. *Bananas,* from Long Beach, CA, and Port Hueneme, CA, to Tacoma, WA, for 270 days. An underlying ETA seeks 120 day authority. Supporting shipper: Cody Produce Supply, 4525 So. Orchard, Tacoma, WA 98466.

MC 142941 (Sub-6-16TA), filed December 8, 1980. Applicant: SCARBOROUGH TRUCK LINES, INC., P.O. Box 6716, Phoenix, AZ 85005. Representative: Doug W. Sinclair (same address as applicant). *Alcoholic beverages* (except in bulk) between points in AR and LA and points in AZ, CA, and NV, for 270 days. Supporting shipper: All American Distributing, 235 East Pima Street, Phoenix, AZ 85004.

MC 142941 (Sub-6-17TA), filed December 8, 1980. Applicant: SCARBOROUGH TRUCK LINES, INC., P.O. Box 6716, Phoenix, AZ 85005. Representative: Doug W. Sinclair (same address as applicant). *Frozen prepared foodstuffs* between Deerfield, IL; Chicago, IL (and its commercial zone) and New Hampton, IA, and points in CO, ID, MT, OR, TX, UT, WA and WY, restricted to the transportation of traffic originating at said plantsites and storage facilities, for 270 days. Supporting shipper: Kitchens of Sara Lee, 500 Waukegan Road, Deerfield, IL 60015.

Note.—Applicant states that it will tack this authority with existing authority not in continuing traffic movements, but to provide shipper with more desirable shipping options.

MC 126514 (Sub-6-10TA), filed December 4, 1980. Applicant: SCHAEFFER TRUCKING, INC., 5200 West Bethany Home, Glendale, AZ 85301. Representative: Leonard R. Kofkin, 39 South LaSalle St., Chicago, IL 60603. *General commodities* (except commodities in bulk) moving on bills of lading of Delaware Valley Shippers Association from Bristol, PA to points in CA for 270 days. An underlying ETA seeks 120 day authority. Supporting shipper: Delaware Valley Shippers Association, 2209 East Farragut Ave., Bristol, PA 19007.

MC 135221 (Sub-6-8TA), filed December 14, 1980. Applicant: DICK SIMON TRUCKING, INC., P.O.B. 26724, Salt Lake City, UT 84125. Representative: Chester A. Zyblut, 366 Executive Bldg., 1030-15th St., N.W., Washington, DC 20005. *Such merchandise as is dealt in and distributed by wholesale, retail, chain grocery stores and food businesshouses and materials and supplies* used in the manufacture and distribution of the aforementioned commodities (except in bulk), between Layton and Salt Lake City, UT, on the one hand, and, on the other, points in NM, TX, ID, NV, CA, CO, WA, OR and MT, for 270 days. An underlying ETA seeks 120 days authority. Supporting shipper: Smith Management Corporation, Salt Lake City, UT 84104.

MC 152993 (Sub-6-1TA), filed December 1, 1980. Applicant: THOMAS E. TANZER d.b.a. TANZER & TANZER TRUCKING CO., 115 Eastwind Dr., Lake Havasu City, AZ 86403. Representative: Thomas E. Tanzer (same as applicant). *Machinery and supplies related thereto,* between Los Angeles County, CA and Lake Havasu City, AZ for 270 days. Supporting shipper: McCulloch Corporation, 900 Lake Havasu Ave., Lake Havasu, AZ 86403.

MC 26396 (Sub-6-54TA), filed December 8, 1980. Applicant: THE WAGGONERS TRUCKING, P.O.B. 31357, Billings, MT 59107. Representative: Bradford E. Kistler, P.O.B. 82028, Lincoln, NE 68501. *Feed, feed ingredients, mineral mixtures, pesticides and feeding equipment,* from Quincy, IL to points in CA, ID, OR and WA, for 270 days. Supporting shipper: Moorman Manufacturing Co., P.O.B. 1C, Quincy, IL 62301.

MC 152429 (Sub-6-1TA), filed December 8, 1980. Applicant: C R & S TANK LINES, INC., P.O. Box 871, Benecia, CA 94510. Representative: Robert J. Gallagher, Esq., 1000 Connecticut Avenue, N.W., Suite 1112, Washington, D.C. 20036. *Petroleum,* between points in CA, on the one hand, and, on the other, points in OR and NV for 270 days. Supporting shippers: There are 5 shippers.

MC 125433 (Sub-6-47TA), filed December 8, 1980. Aplicant: F-B TRUCK LINE COMPANY, 1945 So. Redwood Rd., Salt Lake City, UT 84104. Representative: John B. Anderson (same as applicant). *General commodities* (except Classes A and B explosives and except household goods) between Cook, Dupage, Kane, Kendall, Lake, McHenry, and Will Counties, IL on the one hand, and on the other, points in the United States (except AK and HI), for 270 days. Supporting shipper: General Electric—Freight Forwarding Operation, 2015 Spring Road, Oak Brook IL 60521.

MC 148769 (Sub-6-3TA), filed December 8, 1980. Applicant: SHELDON J. GOLDFIN, d.b.a. NEVADA PRODUCE, 50 Freeport Blvd., Unit #17, Sparks, NV 89431. Representative: Norman A. Cooper, 145 W. Wisconsin Ave., Neenah, WI 54956. *Contract carrier,* irregular routes: *Non-exempt foodstuffs or kindred products* between points in the United States, for 270 days, under contract to Perfect Pac International, Ltd. An underlying ETA seeks 120 days authority. Supporting shipper: Perfect Pac International, Ltd., 5320 W. 159th Street, Oak Forest, IL 60452.

MC 113624 (Sub-6-1TA), filed December 8, 1980. Applicant: WARD TRANSPORT, INC, P.O.B. 753, Pueblo, CO 81002. Representative: Leslie R. Kehl, Jones, Meiklejohn, Kehl & Lyons, 1660 Lincoln St., Suite 1600, Denver, CO 80264. *LPG* between Rio Blanco and Garfield Counties, CO on the one hand, and, on the other points in San Juan County, MN for 270 days. An underlying ETA seeks 9 days authority. Supporting shipper: U.P.G. Inc., 720 S. Colorado Blvd., Denver, CO.

MC 148634 (Sub-6-1TA), filed December 9, 1980. Applicant: COMPASS TRANSPORTATION COMPANY, 620 "C" St., San Diego, CA 92101. Representative: David P. Downey, (same as applicant). *Contract carrier;* irregular routes: *Such commodities as are dealt in by wholesale, retail and chain grocery food business and discount houses, N.O.S.* between Los Angeles County, Orange County, San Diego County, California and Maricopa County, Arizona, for 270 days. Supporting shipper: San Diego Distribution Center, 7130 Miramar Rd., San Diego, CA 92121.

MC 145102 (Sub-6-11TA), filed December 9, 1980. Applicant: FREYMILLER TRUCKING, INC., 1400 S. Union Ave., Bakersfield, CA 93307. Representative: Wayne W. Wilson, 150 E. Gilman St., Madison, WI 53703. *Non-exempt foods and kindred products* from the facilities of or utilized by George A. Hormel & Co. in WI, IA, MN, and NE to points in CA. An underlying ETA seeks 120 days authority. Supporting shipper: George A. Hormel & Co., P.O. Box 800, Austin, MN 55912.

MC 124679 (Sub-6-36TA), filed December 9, 1980. Applicant: C. R. ENGLAND & SONS, INC., 975 West 2100 South, Salt Lake City, UT 84119. Representative: Michael L. Bunnell (same as applicant). *General commodities* (except those of unusual value. Class A and B explosives, household goods as defined by the Commission and commodities in bulk), from PA, NJ, DE, to OR, WA, CA, AZ, NV, UT, ID, and MT. Restricted to traffic originating at or destined to the facilities of the members of the Delaware Valley Shippers Association, for 270 days. Supporting shipper: Delaware Valley Shippers Association, 2209 E Farraquet Ave, Bristol, PA 19007.

Note.—Applicant holds motor contract carrier authority in number MC 128813 and sub numbers thereunder, therefore dual operations may be involved.

MC 151248 (Sub-6-2TA), filed December 10, 1980. Applicant: JIMMIE D. OTT d.b.a. JIM OTT & SON TRUCKING, 3400 Wood Ln., Bakersfield, CA 93309. Representative: Earl N. Miles, 3704 Candlewood Dr., Bakersfield, CA 93306. *Commodities used in the establishment, maintenance, or dismantling of oil, gas, steam or water wells, pipe lines, refineries and cracking or casinghead plants* between points in CA and points in AZ, CO, ID, KS, MT, MO, NV, NM, OK, OR, TX, UT, WA and WY for 270 days. Supporting shipper: WKM Division, 4110 Wible Rd., Bakersfield, CA 93309.

MC 153043 (Sub-6-1TA), filed December 8, 1980. Applicant: WEST SHORES LEASING CORPORATION, 7931 N.E. Halsey St., Suite 201, Portland, OR 97213. Representative: Robert E. Goldstein, 370 Lexington Ave., New York, NY 10017. *Contract carrier,* irregular routes, *passengers and their baggage,* in the same vehicle with passengers, in charter and special operations, beginning and ending at New York, NY; San Francisco, Los Angeles, San Diego, Sacramento, Bakersfield, Santa, Barbara, Carmel and Palm Springs, CA; Miami, FL; Phoenix/Scottsdale, AZ; Las Vegas, Reno, NV and extending to points in the United States, under continuing contract with Travellers International Tour Operators, Inc., for 270 days. Supporting party: Travellers International Tour Operators, Inc., 530 Fifth Avenue, New York, NY 10036.

MC 145466 (Sub-6-1TA), filed December 4, 1980. Applicant: BERYL WILLITS, d.b.a. WILLIE'S GRAIN, 1145 33rd Avenue, Greeley, CO 80631. Representative: Richard S. Mandelson, Suite 1600, Lincoln Center, 1660 Lincoln Street, Denver, CO 80264. *Contract carrier,* irregular routes: *Meat, meat products, meat byproducts and articles distributed by meat packinghouses,* between points in Logan, Morgan and Denver Counties, CO, on the one hand, and, on the other, points in the States of CA, OR, WA, AZ, UT, ID and NV, for 270 days. Supporting shipper: Sterling Colorado Beef Company, P.O. Box 1728, Sterling, CO 80751.

MC 89684 (Sub-6-10TA), filed December 4, 1980. Applicant: WYCOFF COMPANY, INCORPORATED, P.O. Box 366, Salt Lake City, UT 84110. Representative: John J. Morrell (same address as applicant). *Sheets, pads, pillows, comforters and blankets,* between Los Angeles, CA and points in NV, UT, ID, WY, and CO, for 270 days. An underlying ETA seeks 120 days authority. Supporting shipper: L & N Custom Design, 6855 Hermosa Circle, Buena Park, CA 90620.

MC 136228 (Sub-6-1TA), filed December 10, 1980. Applicant: LUISI TRUCK LINES, INC., P.O. Box "H", Milton-Freewater, OR 97862. Representative: Philip G. Skofstad, 1525 N.E. Weidler, Portland, OR 97232. (1) *Wine and malt beverages* from points in CA to Pullman, WA and (2) *bottles, kegs and pallets,* empty returned from Pullman, WA to Irwindale and Fairfield, CA for 270 days. Supporting shipper: Danday, Inc., d.b.a. Dantini Distributing, P.O. Box 362, Pullman, WA 99163.

Agatha L. Mergenovich,

Secretary.

[FR Doc. 80-40205 Filed 12-30-80; 8:45 am]

BILLING CODE 7035-01-M

DEPARTMENT OF JUSTICE

Drug Enforcement Administration

International Drug Scheduling; Single Convention on Narcotic Drugs, 1961, Activity Concerning Dextropropoxyphene

AGENCY: Enforcement Administration, Department of Justice.

ACTION: Notice.

SUMMARY: Notice is to inform concerned parties that the Commission on Narcotic Drugs (CND) will consider the transfer of certain dextropropoxyphene preparations from Schedule II to Schedule III of the Single Convention at its February 1981 meeting; and that Spain has requested that the CND decision to schedule dextropropoxyphene in Schedule II be reversed.

FOR FURTHER INFORMATION CONTACT: William M. Lenck, Chief Counsel, Drug Enforcement Administration, telephone 202-633-1276.

SUPPLEMENTARY INFORMATION: This notice is published in order to inform interested parties that the Department of State has transmitted to the Drug Enforcement Administration notifications issued by the Secretary-General of the United Nations that the United Nations Commission on Narcotic Drugs (CND) will consider two matters which pertain to the drug, dextropropoxyphene, at the February 1981 meeting in Vienna, Austria:

The United States, as Party to the Single Convention on Narcotic Drugs, 1961, has been notified by the Secretary-General of the United Nations that the World Health Organization (WHO) in conformity with Article 3, paragraph 4 of the Single Convention has found that preparations for oral use containing not more than 150 milligrams of dextropropoxyphene per dosage unit or with a concentration of not more than 2.5 per cent in undivided preparations are not liable to abuse. If such preparations are compounded with another substance then that substance must not be one of those controlled by the Convention on Psychotropic Substances, 1971. The WHO recommends that preparations fulfilling all of the specifications mentioned above may be added to Schedule III of the Single Convention. The CND, in accordance with Article 3, paragraph 4, may consider this recommendation at the February 1981 meeting. Preparations (dosage forms) of dextropropoxyhene which could be affected by the WHO recommendation are controlled as Schedule IV narcotics under the Controlled Substances Act.

The Secretary-General of the United Nations in accordance with Article 3, paragraph 8 of the Single Convention, has also notified the Secretary of State that the Government of Spain has requested that the Economic and Social Council of the United Nations review the decision of the CND to include dextropropoxyphene in Schedule II of the Single Convention. All comments received by the U.N. Division of Narcotic Drugs will be submitted to the Council for consideration and appropriate action at its first regular session in 1981.

The Drug Enforcement Administration, and the Department of Health and Human Services are currently engaged in the preparation of comments in relations to above-described notifications received from the Secretary-General. These comments will be submitted to the Department of State to assist in developing the U.S.

Government position on these matters at the meetings of the CND and the Council.

Peter B. Bensinger,

Administrator.

December 24, 1980.

[FR Doc. 80-40683 Filed 12-30-80; 8:45 am]

BILLING CODE 4410-09-M

NATIONAL ADVISORY COMMITTEE ON OCEANS AND ATMOSPHERE

Meeting

December 24, 1980.

Pursuant to Sec. 10(a)(2) of the Federal Advisory Committee Act, 5 U.S.C. App. (1976), notice is hereby given that the National Advisory Committee on Oceans and Atmosphere (NACOA) will hold a 3-day meeting on Monday, Tuesday, and Wednesday, January 12, 13, and 14, 1981. The meetings will be held in Room 418, Page Building 1, 2001 Wisconsin Ave., NW., Washington, DC 20235. The meetings will commence at 2:00 p.m. on Monday and 9:00 a.m. on Tuesday and Wednesday.

The Committee, consisting of 18 non-Federal members, appointed by the President from academia, business and industry, State and local government, and public interest groups, was established by Congress by Public Law 95-63, on July 5, 1977. Its duties are to: (1) undertake a continuing review, on a selective basis, of national ocean policy, coastal zone management, and the status of the marine and atmospheric science and service programs of the United States; (2) advise the Secretary of Commerce on the carrying out the programs of the National Oceanic and Atmospheric Administration; and (3) submit an annual report to the President and to Congress setting forth an assessment, on a selective basis, of the status of the Nation's marine and atmospheric activities, and submit such other reports as may from time to time be requested by the President or Congress.

The tentative meeting schedule follows:

January 12, 1981

Panel Session

2:00 p.m.-5:30 p.m.
Fisheries Panel

January 13, 1981

Plenary Session

9:00 a.m.-9:30 a.m.
Opening Remarks—Acting Chairman
9:30 a.m.-10:30 a.m.
Coastal Energy Impact Program
10:30 a.m.-12:00 noon
Waste Management Report, John Knauss, Chairman, Committee review/approval
12:00 noon-1:00 p.m.
Lunch
1:00 p.m.-2:30 p.m.
Services to Ocean Operations Report Committee review/proposal

Panel Meeting

2:30 p.m.-4:30 p.m.
Hydrology, Paul Bock, Chairman
Dr. Richard E. Hallgren, Director, National Weather Service, National Oceanic and Atmospheric Administration (NOAA)
Dr. John Schaake, Chief, Hydrologic Services Division, National Weather Service, National Oceanic and Atmospheric Administration (NOAA)

Adjourn

4:30 p.m.

January 14, 1981

Panel Session

9:00 a.m.-10:00 a.m.
Support for Atmospheric Research Facilities, Louis J. Battan, Chairman

Plenary Session

10:00 a.m.-12:00 noon
Law of the Sea, Burt H. Keenan, Member; Speaker: Conrad Welling; Topic: Deep Seabed Mining

Lunch

12:00 p.m.-1:00 p.m.
1:00 p.m.-3:30 p.m.
Panel Reports

Adjourn

3:30

Persons desiring to attend will be admitted to the extent seating is available. Persons wishing to make formal statements should notify the Chairman in advance of the meeting. The Chairman retains the prerogative to impose limits on the duration of oral statements and discussions. Written statements may be submitted before or after each session.

Additional information concerning this meeting may be obtained through the Committee's Executive Director, Steven N. Anastasion, whose mailing address is: National Advisory Committee on Oceans and Atmosphere, 3300 Whitehaven Street, NW., (Room 436, Page Building #1), Washington, DC 20235. The telephone number is (202) 653-7818.

Stephanie M. Jones,

Acting Executive Director.

[FR Doc. 80-40654 Filed 12-30-80; 8:45 am]

BILLING CODE 3510-12-M

NATIONAL AERONAUTICS AND SPACE ADMINISTRATION

[Notice (80-85)]

NASA Advisory Council, Space Systems and Technology Advisory Committee (SSTAC); Meeting

AGENCY: National Aeronautics and Space Administration.

ACTION: Notice of meeting.

SUMMARY: In accordance with the Federal Advisory Committee Act, Pub. L. 92-463, as amended, the National Aeronautics and Space Administration announces the following meeting:

NAME OF COMMITTEE: NASA Advisory Council, Space Systems and Technology Advisory Committee, Informal Subcommittee on Energy Technology.

DATE AND TIME: January 28, 29, 1981, 8:30 a.m. to 5 p.m., January 30, 1981, 8:30 a.m. to 11 a.m.

ADDRESS: Jet Propulsion Laboratory, Room 903, Building 180, Pasadena, California.

TYPE OF MEETING: Open.

Agenda

January 28, 1981

8:30 a.m.—Welcome and Introductory Remarks.
9 a.m.—Update of NASA Energy Programs.
1:30 p.m.—Review of Jet Propulsion Laboratory Energy Projects.

January 29, 1981

8:30 a.m.—Continuation of Jet Propulsion Laboratory Project Reviews.

January 30, 1981

8:30 a.m.—Subcommittee Discussions and Formulation of Recommendations.
11 a.m.—Adjourn.

FOR FURTHER INFORMATION CONTACT: Mr. Donald A. Beattie, Executive Secretary, National Aeronautics and Space Administration, Washington, DC 20546 (202/755-3127).

SUPPLEMENTARY INFORMATION: The Informal Subcommittee on Energy Technology of the NASA Advisory Council, Space Systems and Technology Advisory Committee, was established to provide advice and recommendations on the overall objectives, approach, content, structure and balance of NASA energy technology efforts. The Chairperson is Dr. Robert L. Hirsch. There are currently seven members.

The meeting will be open to the public up to the seating capacity of the room (approximately 40 persons including the

Subcommittee members and participants).

Gerald D. Griffin,

Acting Associate Administrator for External Relations.

December 19, 1980.

[FR Doc. 80-40564 Filed 12-30-80; 8:45 am]

BILLING CODE 7510-01-M

Notice (80-84)]

NASA Advisory Council (NAC), Life Sciences Advisory Committee; Meeting

The NAC Life Sciences Advisory Committee (LSAC) will meet at the National Aeronautics and Space Administration Headquarters on January 16, 1981. The meeting will take place from 8:30 a.m. to 5 p.m. in Room 5026 of Federal Building 6, 400 Maryland Avenue SW, Washington, DC 20546. The meeting will be open to the public up to the seating capacity of the room (approximately 50 persons including 12 Committee members and participants).

The Life Sciences Advisory Committee consults with and advises the Council and NASA on the accomplishments and plans of NASA's Life Sciences Programs. The Committee is chaired by Dr. Richard Wurtman. Following is the approved agenda for the meeting:

Agenda

January 16, 1981

8:30 a.m.—Introductory Remarks.

9:00 a.m.—Application of Section Criteria to LS-1 Experiments.

3:30 p.m.—Payload Options and Sample Payloads.

4:00 p.m.—Discussion: Actions From Previous Meeting.

5:00 p.m.—Adjourn.

For further information please contact Dr. Paul Rambaut, Executive Secretary for the Committee, Code SBR-3, National Aeronautics and Space Administration, Washington, DC 20546, Telephone (202) 755-3723.

Gerald Griffin,

Acting Associate Administrator for External Relations.

December 19, 1980.

[FR Doc. 80-40565 Filed 12-30-80; 8:45 am]

BILLING CODE 7510-01-M

NUCLEAR REGULATORY COMMISSION

Abnormal Occurrence; Improper Use and Inadequate Control of Licensed Material (Radiopharmaceuticals)

Section 208 of the Energy Reorganization Act of 1974, as amended, requires the NRC to disseminate information on abnormal occurrences (i.e., unscheduled incidents or events which the Commission determines are significant from the standpoint of public health and safety). The following incident was determined to be an abnormal occurrence using the criteria published in the Federal Register on February 24, 1977 (42 FR 10950). Appendix A (Example I.d.3) criteria of the Policy Statement notes that a serious deficiency in management or procedural controls in major areas can be considered an abnormal occurrence. The following description of the event also contains the remedial action taken.

Date and Place.—On July 31, 1980, the Nuclear Regulatory Commission's Region III office in Glen Ellyn, Illinois received a communication indicating that patients of Lakeview Hospital in Wauwatosa, Wisconsin had routinely received double the prescribed dose of radiopharmaceuticals for diagnostic scans since 1976. The hospital currently holds an NRC license, originally issued in 1959 and most recently renewed in 1979, to possess radioactive isotopes for medical diagnostic procedures.

Nature and Probable Consequences.—Investagations revealed that the licensee's nuclear medicine staff were routinely administering more than the prescribed doses of radiopharmaceuticals to patients, most of them age 65 and over, for those diagnostic scans of brain, bone, liver, spleen and lung in which technetium-99m (Tc-99m) was incorporated as part of the scanning agent. This involved 20 to 30 patients per month. The doses administered were generally twice the prescribed; the highest dose admininstered to a patient was 42 millicuries of Tc-99m DTPA [1] for a brain scan, instead of the 15 millicuries which the hospital 's written protocol prescribed. This would have resulted in a whole body dose of 840 millirems, and a dose to the critical organ (urinary bladder) of 23 rems. (By comparison, a normal chest X-ray is equal to a whole body dose of 20 to 50 millirems.) The increased dosages were unnecessary because they did not result in any corresponding benefit to the patients.

The purposes of the dosage increases were to decrease scanning time (from about 30-45 minutes to about 15-20 minutes) and to obtain brighter images before the patients moved. This was done by administering increased dosages despite available alternative means to accomplish the same purpose without subjecting the patients to unnecessary radiation.

In addition to the misadministrations, the investigation identified several items of non-compliance with the license concerning failure to maintain accurate records, inadequate equipment calibration, and inadequate radiation surveys.

Cause or Causes.—The principal causes of the incident were the improper use of the radiopharmaceuticals by the licensee staff and inadequate procedural controls for the program. Further, the licensee's technetium utilization log was falsified to indicate that proper dosages had been administered. This prevented NRC inspectors from detecting this practice.

Actions Taken to Prevent Recurrence

Licensee.—The licensee cooperated in the investigation, took prompt action to correct deficiencies including suspension and later removal of two employees involved, and stopped all licensed activities when NRC suspended their license. Patients requiring nuclear medicine diagnostic procedures were referred to a nearby county medical complex which is authorized to perform procedures involving radiopharmaceuticals. In early September in the reply to the NRC Order to Show Cause and during a subsequent NRC-licensee management meeting, the licensee submitted new procedures aimed at correcting the identified problems. In addition, the two employees, initially suspended, were discharged.

NRC.—An NRC investigation, begun on August 1 and completed on August 7, 1980, included interviews with an authorized user and three nuclear medicine technicians, as well as a review of records. On August 11, 1980, the NRC issued an Order Suspending License, effective immediately, and an Order to Show Cause why the license should not be revoked; this was also published in the Federal Register (45 FR 56477). An investigation by the NRC Office of Inspector and Auditor is complete and has been forwarded to the Department of Justice for whatever action they deem appropriate. The licensee's response to the Order to Show Cause was reviewed by the NRC, and was determined to have shown sufficient cause why the license should not be revoked. The suspension order was rescinded and a Confirmatory Order Modifying License was issued to incorporate the licensee's corrective action in the license.

Dated at Washington, D.C., this 19th day of December, 1980.

[1] Diethylenetriamine pentaacetic acid (DTPA) labelled with Tc-99m is a radiopharmaceutical used for brain and kidney imaging.

For the Nuclear Regulatory Commission.

Samuel J. Chilk,

Secretary of the Commission.

[FR Doc. 80-40635 Filed 12-30-80; 8:45 am]

BILLING CODE 7590-01-M

[Docket Nos. 50-454 and 50-455]

Commonwealth Edison Co. (Byron Nuclear Power Station, Units 1 and 2); Request for Action

Notice is hereby given that by a request of November 21, 1980, the Rockford League of Women Voters (League) petitioned that a proceeding be instituted pursuant to 10 CFR 2.202 to consider modification, suspension or revocation of the construction permit issued to Commonwealth Edison Company for the Byron Nuclear Power Station, Units 1 and 2, to insure proper resolution of all outstanding safety problems applicable to the Byron Station. Pending a full hearing and determination of its request, the League sought an immediate halt to the construction of the Byron Station. This petition is being treated as a request for action under 10 CFR 2.206 of the Commission's regulations, and accordingly, action will be taken on the petition within a reasonable period of time.

Copies of the petition are available for inspection in the Commission's Public Document Room at 1717 H Street NW., Washington, D.C. 20555 and in the local public document room at the Byron Public Library, Third and Washington Streets, Byron, Illinois 61010.

Dated at Bethesda, Md., this 22nd day of December 1980.

For the Nuclear Regulatory Commission.

Harold R. Denton,

Director, Office of Nuclear Reactor Regulation.

[FR Doc. 80-40644 Filed 12-30-80; 8:45 am]

BILLING CODE 7590-01-M

[Docket No. 50-155]

Consumers Power Co. (Big Rock Point Plant), Director's Decision

By petition dated April 1, 1980, Christa-Maria, on behalf of Concerned Citizens for the Charlevoix Area, requested that the Big Rock Point Plant be shutdown immediately because it does not meet minimal Nuclear Regulatory Commission (NRC) requirements relating to containment integrity. This petition has been considered under the provisions of 10 CFR 2.206 of the Commission's regulations. Notice of receipt of the petition was published in the Federal Register July 7, 1980 (45 FR 45748).

The basis of Christa-Maria's petition is the contention that the steel containment at the Big Rock Point Plant is insufficient to contain radiation in the event of an accident. Petitioner asserts that continued operation of the Big Rock Point Plant with an unshielded steel containment is in direct violation of NRC requirements. Upon consideration of the information set forth in Christa-Maria's petition, it has been determined that Christa-Maria has not presented any new information or reasons which constitute a basis for shutting down the Big Rock Point Plant.

Discussion

Christa-Maria asserts that the unshielded steel containment at the Big Rock Point Plant is insufficient to contain radiation and that this is in direct violation of "requirement 2.213" of NUREG 0578, "TMI-2 Lessons Learned Task Force Status Report and Short-Term Recommendations," which states that nuclear power plants must shut down immediately in the event of a complete loss of safety function.

It is assumed that the reference to "requirement 2.213" of NUREG 0578 in Christa-Maria's petition is a typographical error and that the reference was intended to be to Section 2.2.3. In that section, the NRC Lessons Learned Task Force had originally proposed that the Technical Specifications for each reactor should provide that the reactor be placed in a hot shutdown condition within 8 hours and a cold shutdown condition within 24 hours from the time that the reactor is found to be or has been in operation with a complete loss of safety function. However, based on further review, the NRC staff determined that rather than implement the original proposal at this time a broad new rulemaking should be undertaken which would require plant shutdown for various human and procedural errors. Accordingly, the NRC's September 13, 1979 letter to all licensees indicated that no further action on section 2.2.3 would be required by the licensees pending the actions of the rulemaking process. Consequently, the "requirement" which Christa-Maria asserts the Big Rock facility is violating is not currently a requirement for NRC licensees.

The issue of adequate shielding from post-accident radiation fields is still under active review. One of the lessons learned from the TMI-2 accident is that radiation fields resulting from contained radiation sources after an accident may make it difficult to effectively perform accident recovery operations or may impair safety equipment. As a result, by letter of October 30, 1979, we asked nuclear power plant licensees to perform a design review of plant shielding by January 1, 1980 and to implement needed changes by January 1, 1981. The NRC design criteria assume a very severe accident with a very large radiation source term and assume that stringent limits on radiation exposure to personnel would be met. Consumers Power Company submitted the design review by letter of December 27, 1979 and identified areas of the plant which would need additional shielding protection if NRC design criteria were to be met.

By letters dated February 22, April 2, May 6, August 25, and September 2, 1980, Consumers Power Company had requested a delay in implementation of additional shielding protection requirements until the completion of an ongoing risk assessment of the plant, estimated to be April 1981. The requested delay was effectively mooted by the publication of NUREG-0737, "Clarification of TMI Action Plan Requirements" which modifies the implementation date for necessary changes to January 1, 1982.

As required by the staff, the licensee has completed a review of vital areas in which personnel occupancy may be limited by radiation during post-accident operations. Our safety evaluation of the implementation of "Category A" Lessons Learned requirements was issued on May 2, 1980 and stated that the control room, the interim Technical Support Center and the Operational Support Center are sufficiently shielded that they would remain accessible for continuous occupancy. The vital areas in which personnel occupancy may be limited are the backup emergency diesel, backup cooling water supply hose to the core spray heat exchanger and the emergency diesel general fuel supply. The licensee initiated work to implement changes for these three items, and two of them, the relocation of the backup emergency diesel and the modification to the emergency diesel general fuel supply, should be completed shortly. With respect to the third item, the licensee began implementation of the modifications but has recently informed us that preliminary results from the probabilistic risk assessment being conducted for the Big Rock Point plant could affect the need for the modification to the backup cooling water supply hose to core spray heat exchanger. Accordingly, they indicated that work on this third item has been stopped. Because of the delay in the

implementation of additional shielding requirements until January 1, 1982, as discussed above, the licensee had additional time to further assess this modification.

Because of the conservatism of the design requirements against which the shielding acceptability must be evaluated, it is our judgment that a deferral of implementation until 1982 will not result in exposure of plant personnel to significant risk from a loss-of-coolant accident or a greater risk to the public than previously evaluated, if such an accident should occur.

Conclusion

Based on the foregoing discussion and the provisions of 10 CFR 2.206, I have determined that there is no adequate basis for shutting down the Big Rock Point Plant. The request by the Concerned Citizens of Charlevoix Area is, therefore, *denied.*

A copy of this Decision will be placed in the Commission's Public Document Room at 1717 H Street, NW., Washington, D.C. 20555 and the Local Public Document Room for the Big Rock Point Plant, located at the Charlevoix Public Library, 107 Clinton Street, Charlevoix, Michigan 49720. A copy of this Decision will also be filed with the Secretary of the Commission for review by the Commission in accordance with 10 CFR 2.206(c) of the Commission's regulations.

In accordance with 10 CFR 2.206(c) of the Commission's regulations, this Decision will constitute the final action of the Commission twenty (20) days after the date of issuance, unless the Commission, on its own motion, institutes a review of this Decision within that time.

Dated at Bethesda, Md., this 18 day of December 1980.

Harold R. Denton,

Director, Office of Nuclear Reactor Regulation.

[FR Doc. 80-40638 Filed 12-30-80; 8:45 am]

BILLING CODE 7590-01-M

[Docket No. 50-155]

Consumers Power Co. (Big Rock Point Plant); Issuance of Director's Decision

On December 11, 1979, notice was published in the Federal Register (44 FR 71489) that by petition dated November 4, 1979, Ms. JoAnn Bier and Ms. Shirley Johns, had requested that an order be issued to delay restart of the Big Rock Point Plant Unit 1. Seven alleged safety questions identified in the petition were resolved. Six of the seven issues identified in November 4, 1979, request were repeated with clarifications, in a request of January 6, 1980. Moreover, the eighth safety issue was added in the latter submittal. The petitions were not received by the Nuclear Regulatory Commission (the Commission) before restart of the facility. Consequently, the petitions have been treated as a request for an order to show cause why Facility Operating License No. DPR-6 issued to Consumer Power Company for the Big Rock Point Plant should not be suspended pending resolution of the issues raised.

The Commission's Director of Nuclear Reactor Regulation has treated these requests as requests for action under 10 CFR 2.206. Upon review of records pertinent to the issues raised by Ms. Bier and Ms. Johns, the Director has determined that the requests do not provide an adequate basis to issue an order to show cause why License No. DPR-6 for the Big Rock Point Plant should not be suspended. Accordingly, the requests have been *denied.*

Copies of the Director's decision are available for inspection in the Commission's Public Document Room, 1717 H Street, N.W. Washington, D.C., 20555 and at the Local Public Document Room for Big Rock Point, located at the Charlevoix Public Library, 107 Clinton Street, Charlevoix, Michigan 49720. A copy of this decision will also be filed with the Secretary for the Commission's review in accordance with 10 CFR 2.206(c) of the Commission's regulations.

As provided in 10 CFR 2.206(c), the decision will constitute the final action of the Commission twenty (20) days after the date of issuance, unless the Commission, on its own motion, institutes a review of the decision within that time.

Dated at Bethesda, Md., this 18 day of December 1980.

Harold R. Denton,

Director, Office of Nuclear Reactor Regulation.

[FR Doc. 80-40639 Filed 12-30-80; 8:45 am]

BILLING CODE 7590-01-M

[Docket Nos. 50-461 OL and 50-462 OL]

Illinois Power Co., et al., (Clinton Power Station, Units 1 and 2, Application for Operating License); Memorandum and Order (Summarizing Telephone Conference and Ordering Special Prehearing Conference)

December 22, 1980.

Petitions to intervene in this operating licensing proceeding have been filed by two groups, Prairie Alliance and Bloomington-Normal Chapter of Prairie Alliance (hereinafter called "Bloomington-Normal"). Both petitioners and also the State of Illinois have requested a hearing.

A telephone conference was held on December 2, 1980 for the purpose of making sure that the petitioners understood the specificity requirements of 10 CFR 2.714(b) and to establish a date for a Special Prehearing Conference pursuant to 10 CFR 2.751(a).

The spokesman for Prairie Alliance stated that he had a copy of 10 CFR and understood the amendment requirement of 10 CFR 2.714(b). He requested postponement of the Special Prehearing Conference because he had not had access to the Application for facility operating license and the Applicants' Environmental Report. Counsel for Applicants agreed to assist the petitioner in locating these documents. The spokesman for Bloomington-Normal indicated that this petitioner intended to consolidate its efforts with Prairie Alliance. All conferees agreed upon January 29, 1981 as a date for the Special Prehearing Conference.

Order

In view of the foregoing, it is, this 22nd day of December 1980 Ordered

That the Special Prehearing Conference will be held at the Urbana Civic Center, 108 East Water Street, Urbana, Illinois on January 29, 1981 beginning at 9:30 a.m.

For the Atomic Safety and Licensing Board.

Oscar H. Pant,

Administrative Judge.

[FR Doc. 80-40634 Filed 12-30-80; 8:45 am]

BILLING CODE 7590-01-M

[Byproduct Material License No. 22-00057-06; EA-80-47]

Minnesota Mining and Manufacturing Company; Order Imposing a Civil Monetary Penalty

I

Minnesota Mining and Manufacturing Company, St. Paul, Minnesota (the "licensee"), is the holder of Byproduct Material License No. 22-00057-06 (the "license"), issued by the Nuclear Regulatory Commission (the "Commission"). The license authorizes research and development as defined in 10 CFR Part 30; manufacture and testing of products; and demonstration of sealed sources and devices containing sealed sources. This license was initially issued on February 17, 1964, and has an expiration date of May 31, 1979. A timely renewal application has been submitted.

II

An inspection was conducted on March 31, 1980, at the waste burial site in Hansford, Washington. As a result of this inspection, it appears the licensee has not conducted its activities in full compliance with the conditions of the license and with the requirements of the Nuclear Regulatory Commission's "Packaging of Radioactive Material for Transport and Transportation of Radioactive Material Under Certain Conditions," Part 71, Title 10, Code of Federal Regulations. A written Notice of Violation was served upon the licensee by letter dated August 6, 1980, specifying the item of noncompliance in accordance with 10 CFR 2.201. A Notice of Proposed Imposition of a Civil Penalty was served concurrently upon the licensee in accordance with Section 234 of the Atomic Energy Act of 1954, as amended (42 U.S.C. 2282) and 10 CFR 2.205, incorporating by reference the Notice of Violation which stated the nature of the item of noncompliance, and the provisions of the NRC and DOT regulations, with which the licensee was in noncompliance. An answer from the licensee to the Notice of Violation and the Notice of Proposed Imposition of a Civil Penalty was dated August 28, 1980.

III

Upon consideration of the answer received and the statements of fact, explanation, and argument in denial or mitigation contained therein, as set forth in the Attachment to this Order, the Director of the Office of Inspection and Enforcement has determined that the penalty proposed for the item of noncompliance designated in the Notice of Violation should be imposed.

IV

In view of the foregoing and pursuant to Section 234 of the Atomic Energy Act of 1954, as amended (42 U.S.C. 2282) and 10 CFR 2.205, it is hereby ordered that:

The licensee pay a civil penalty in the total amount of Two Thousand Dollars ($2,000) within twenty-five days of the date of this Order, by check, draft, or money order payable to the Treasurer of the United States and mailed to the Director of the Office of Inspection and Enforcement.

V

The licensee may, within twenty-five days of the date of this Order, request a hearing. A request for a hearing shall be addressed to the Secretary to the Commission, U.S.N.R.C., Washington, D.C. 20555. A copy of the hearing request shall also be sent to the Executive Legal Director, U.S.N.R.C., Washington, D.C. 20555. If a hearing is requested, the Commission will issue an Order designating the time and place of hearing. Upon failure of the licensee to request a hearing within twenty-five days of the date of this Order, the provisions of this Order shall be effective without further proceedings and, if payment has not been made by this time, the matter may be referred to the Attorney General for collection.

VI

In the event the license requests a hearing as provided above, the issues to be considered at such a hearing shall be:

a. whether the licensee was in noncompliance with the Commission's requirements as set forth in the Notice of Violation referenced in Sections II and III above; and,

b. whether on the basis of the item of noncompliance, this Order should be substained.

Dated at Bethesda, Md., this 17th day of December 1980.

For the Nuclear Regulatory Commission.

Victor Stello, Jr.,

Director, Office of Inspection and Enforcement.

Appendix A—Evaluation and Conclusion

For the item of noncompliance and associated civil penalty identified in the Notice of Violation (dated August 6, 1980) the original item of noncompliance is restated and the Office of Inspection and Enforcement's evaluation and conclusion regarding the licensee's response to the item (dated August 28, 1980) is presented.

Statement of Noncompliance

10 CFR 71.5 prohibits delivery of licensed material to a carrier for transport unless the licensee complies with applicable regulations of the Department of Transportation in 49 CFR Parts 170–189. 49 CFR 173.393(j)(2) requires that radiation levels not exceed 200 millirem per hour at any point on the external surface of the vehicle used to transport packages of radioactive material.

Contrary to the above, a shipment of licensed radioactive material was made from your Saint Paul, Minnesota facility to Richland, Washington, on March 25, 1980 in an exclusive use vehicle. A dose rate of 300 millirem per hour, was measured at contact with the bottom of the trailer upon receipt at Richland, Washington on March 31, 1980.

This a Severity II item of noncompliance.

(Civil Penalty—$2,000)

Licensee's Response

In the response dated August 28, 1980, the licensee stated, in part, "Although 3M surveyed the vehicle before it left our site, the survey was limited to the vertical surfaces of the trailer and inside the cab of the tractor. We have no radiation survey data to confirm or deny the radiation dose rates which were measured underneath the trailer when it arrived at Richland. Therefore, we accept your findings that a radiation level underneath the trailer exceeded 200 mR/hr."

"For more than 10 years, 3M shipped low level radioactive waste by exclusive use vehicle to approved disposal sites. Throughout this period, representatives of government and industry acknowledged that formal regulatory survey standards for assuring compliance with external radiation levels standards were needed. To fill this void, shippers developed practices based on verbal advice provided by federal and state agency personnel."

"The industry practices relevant here, developed with the knowledge of agency personnel, called for measuring surface dose rates on the four sides of the trailer, at a distance of six feet from the trailer and in the cab of the tractor. Routine measurements on the top and/or bottom of a trailer were not part of this accepted practice. On March 26, 1980, 3M followed this practice in belief that no additional measurements were required . . ."

"On April 1, 1980, NECO advised 3M that our March 26 shipment was in noncompliance. At the same time, NECO advised that routine surveys underneath vehicles had been conducted since the fall of 1979. At no time prior to April 1 was 3M so advised by NECO even though there were at least seven documented telephone conversations between representatives of the two companies during the previous eight months. No mention was made of a 175 mR/hr spot on the side of the truck and we were led to believe that one of the routine surveys detected the excessive dose rate. If this is correct, a finding of noncompliance is unfair to 3M becaue 3M had no knowledge that the NRC used routine surveys underneath vehicles."

Evaluation of the Licensee's Response

As you know, effective December 3, 1979, the Commission amended its regulations for packaging and transportation of radioactive materials to make compliance with the Department of Transportation (DOT) regulations explicit NRC requirements. This change did not alter any substantive requirements; it was designed to enable the NRC to inspect activities of its licensees in this area and to take enforcement actions if

warranted. But, because of the growing number of transportation incidents involving low specific activity materials and type A quantities of radioactive materials due, at least in part, to the use of defective shipping containers and improper loading and preparation of packages for shipment, the NRC determined that augmentation of the DOT inspection and enforcement efforts by those of NRC was necessary to assure compliance with applicable regulations. This change in the regulations, plus the addition of specific criteria for imposing civil penalties for transportation incidents, should have signalled Minnesota Mining & Manufacturing, as well as all licensees, that what may have been considered sufficient in industry practices to demonstrate compliance with a particular requirement in the past might no longer be adequate and certainly not in strict compliance with DOT requirements. It was incumbent on you to ascertain whether additional measures to assure strict compliance might now be necessary.

The applicable DOT requirement clearly limits the dose rate from licensed radioactive material to 200 millirem per hour *at any point* on the external surface of the car or vehicle consigned for exclusive use (49 CFR 173.393(j)(2)). Under the procedures in Nuclear Engineering Company's license, *i.e.*, Condition 31 and Appendix B, to which you referred, surveying underneath trailers is required when readings around the sides of the trailer are near allowable limits. Consequently, the NRC inspector would have surveyed under the vehicle in any event, because a spot reading 175mR/hr was found on one of the sides of the vehicle.

Conclusion

The item as stated is an item of noncompliance. The information presented by the licensee does not provide a basis for modification of this enforcement action.

[FR Doc. 80-40636 Filed 12-30-80; 8:45 am]
BILLING CODE 7590-01-M

[Docket No. 50-220]

Niagara Mohawk Power Corp.; Issuance of Amendment to Facility Operating License

The U.S. Nuclear Regulatory Commission (the Commission) has issued Amendment No. 38 to Facility Operating License No. DPR-63 to Niagara Mohawk Power Corporation (the licensee) which revised the Technical Specifications for operation of the Nine Mile Point Nuclear Station, Unit No. 1 (the facility) located in Oswego County, New York. The amendment is effective as of its date of issuance.

The amendment revises the Technical Specifications to permit plant operation for four hours with increased secondary containment allowable leakage. This interim approval allows improvement work on safety related systems.

The application for the amendment complies with the standards and requirements of the Atomic Energy Act of 1954, as amended (the Act), and the Commission's rules and regulations. The Commission has made appropriate findings as required by the Act and the Commission's rules and regulations in 10 CFR Chapter I which are set forth in the license amendment. Prior public notice of this amendment was not required since the amendment does not involve a significant hazards consideration.

The Commission has determined that the issuance of this amendment will not result in any significant environmental impact and that pursuant to 10 CFR 51.5(d)(4) an environmental impact statement or negative declaration and environmental impact appraisal need not be prepared in connection with issuance of this amendment.

For further details with respect to this action, see (1) the application for amendment dated October 29, 1980, (2) Amendment No. 38 to License No. DPR-63, and (3) the Commission's related Safety Evaluation. All of these items are available for public inspection at the Commission's Public Document Room, 1717 H Street, NW., Washington, D.C. and at the Oswego County Office Building, 46 E. Bridge Street, Oswego, New York 13126. A copy of items (2) and (3) may be obtained upon request addressed to the U.S. Nuclear Regulatory Commission, Washington, D.C. 20555, Attention: Director, Division of Licensing.

Dated at Bethesda, Md. this 12th day of December, 1980.

For the Nuclear Regulatory Commission.

Thomas A. Ippolito,

Chief, Operating Reactors Branch No. 2, Division of Licensing.

[FR Doc. 80-40640 Filed 12-30-80; 8:45 am]
BILLING CODE 7590-01-M

[Docket No. 50-220]

Niagara Mohawk Power Corp.; Issuance of Amendment to Facility Operating License

The U.S. Nuclear Regulatory Commission (the Commission) has issued Amendment No. 39 to Facility Operating License No. DPR-63 to Niagara Mohawk Power Corporation (the licensee) which revised the license and Technical Specifications for operation of the Nine Mile Point Nuclear Station, Unit No. 1 (the facility) located in Oswego County, New York. The amendment is effective as of its date of issuance.

The amendment revises the Technical Specifications to allow plant operation at reduced power with three primary coolant recirculation loops operable; i.e., N-2 loop operation.

The application for the amendment complies with the standards and requirements of the Atomic Energy Act of 1954, as amended (the Act), and the Commission's regulations. The Commission has made appropriate findings as required by the Act and the Commission's regulations in 10 CFR Chapter I which are set forth in the license amendment. Prior public notice of this amendment was not required since the amendment does not involve a significant hazards consideration.

The Commission has determined that the issuance of this amendment will not result in any significant environmental impact and that pursuant to 10 CFR 51.5(d)(4) an environmental impact statement or negative declaration and environmental impact appraisal need not be prepared in connection with issuance of this amendment.

For further details with respect to this action, see (1) the application for amendment dated September 25, 1979 supplemented by letter dated October 22, 1980, (2) Amendment No. 39 to License No. DPR-63, and (3) the Commission's related Safety Evaluation. All of these items are available for public inspection at the Commission's Public Document Room, 1717 H Street, NW., Washington, D.C. and at the Oswego County Office Building, 46 East Bridge Street, Oswego, New York 13126. A copy of items (2) and (3) may be obtained upon request addressed to the U.S. Nuclear Regulatory Commission, Washington, D.C. 20555, Attention: Director, Division of Licensing.

Dated at Bethesda, Md., this 12th day of December, 1980.

For the Nuclear Regulatory Commission.

Thomas A. Ippolito,

Chief, Operation Reactors Branch No. 2, Division of Licensing.

[FR Doc. 80-40641 Filed 12-30-80; 8:45 am]
BILLING CODE 7590-01-M

Regulatory Guide; Issuance and Availability

The Nuclear Regulatory Commission has issued a revision to a guide in its Regulatory Guide Series. This series has

been developed to describe and make available to the public methods acceptable to the NRC staff of implementing specific parts of the Commission's regulations and, in some cases, to delineate techniques used by the staff in evaluating specific problems or postulated accidents and to provide guidance to applicants concerning certain of the information needed by the staff in its review of applications for permits and licenses.

Revision 2 to Regulatory Guide 1.97, "Instrumentation for Light-Water-Cooled Nuclear Power Plants To Assess Plant and Environs Conditions During and Following an Accident," describes a method acceptable to the NRC staff for complying with the Commission's regulations to provide instrumentation to monitor plant variables and systems during and following an accident in a light-water-cooled nuclear power plant.

The guide endorses, with certain exceptions, ANSI/ANS 4.5–1980, "Criteria for Accident Monitoring Functions in Light-Water-Cooled Reactors." It has been revised as a result of lessons learned from investigations of the accident at Three Mile Island, public comment, and additional staff review.

Comments and suggestions in connection with (1) items for inclusion in guides currently being developed or (2) improvements in all published guides are encouraged at any time. Comments should be sent to the Secretary of the Commission, U.S. Nuclear Regulatory Commission, Washington, D.C. 20555, Attention: Docketing and Service Branch.

Regulatory guides are available for inspection at the Commission's Public Document Room, 1717 H Street NW., Washington, D.C. Copies of active guides may be purchased at the current Government Printing Office price. A subscription service for future guides in specific divisions is available through the Government Printing Office. Information on the subscription service and current prices may be obtained by writing to the U.S. Nuclear Regulatory Commission, Washington, D.C. 20555, Attention: Publications Sales Manager.

(5 U.S.C. 552(a))

Dated at Rockville, Maryland this 22nd day of December 1980.

For the Nuclear Regulatory Commission.

Ray G. Smith,

Acting Director, Office of Standards Development.

[FR Doc. 80-40608 Filed 12-30-80; 8:45 am]

BILLING CODE 7590-01-M

[Byproduct Material License No. 12-02370-01; EA-80-29]

Superior Industrial X-Ray Co.; Order Imposing Civil Monetary Penalties

I

Superior Industrial X-Ray Company, Blue Island, Illinois (the "licensee") is the holder of Byproduct Material License No. 12-02370-01 (the "license") issued by the Nuclear Regulatory Commission (the "Commission") which authorizes the licensee to perform industrial radiography at temporary job sites in accordance with the conditions specified therein. The license was issued on April 5, 1957, and has a termination date of November 30, 1984.

II

A routine inspection was conducted of licensed activities under the license during the period April 25 through April 30, 1980. As a result of this inspection it appears that the licensee has not conducted its activities in full compliance with the conditions of the license and with the requirements of the Nuclear Regulatory Commission's "Notices, Instructions and Reports to Workers; Inspections", Part 19, "Standards for Protection Against Radiation", Part 20, and "License for Radiographer and Radiation Safety Requirements for Radiographic Operations," Part 34, Title 10, Code of Federal Regulations. A written Notice of Violation was served upon the licensee by letter dated June 23, 1980, specifying the items of noncompliance in accordance with 10 CFR 2.201. A Notice of Proposed Imposition of Civil Penalties was served concurrently upon the licensee in accordance with Section 234 of the Atomic Energy Act of 1954, as amended (42 U.S.C. 2282), and 10 CFR 2.205, which incorporated by reference the Notice of Violation. An answer from the licensee to the Notice of Violation and the Notice of Proposed Imposition of Civil Penalties was received on July 21, 1980.

III

Upon consideration of the answers received and the statements of fact, explanation, and argument for deferral, compromise, mitigation, or cancellation contained therein, as set forth in Appendix A to this Order, the Director of the Office of Inspection and Enforcement has determined that the penalties proposed for the items of noncompliance designated in the Notice of Violation should be imposed except for Item 3(a). Item 3(a) is withdrawn and the corresponding penalty for Items 3(a) and 3(b) is mitigated by $750.00.

IV

In view of the foregoing and pursuant to Section 234 of the Atomic Energy Act of 1954, as amended (42 USC 2282), and 10 CFR 2.205, it is hereby ordered that:

The licensee pay civil penalties in the total amount of Nine Thousand Fifty Dollars ($9,050) within twenty-five days of the date of this Order, by check, draft, or money order payable to the Treasurer of the United States and mailed to the Director of the Office of Inspection and Enforcement.

V

The licensee may, within twenty-five days of the date of this Order, request a hearing. A request for a hearing shall be addressed to the Secretary to the Commission, U.S.N.R.C., Washington, D.C. 20555. A copy of the hearing request shall also be sent to the Executive Legal Director, U.S.N.R.C., Washington, D.C. 20555. If a hearing is requested, the Commission will issue an Order designating the time and place of hearing. Upon failure of the licensee to request a hearing within twenty-five days of the date of this Order, the provisions of this Order shall be effective without further proceedings and, if payment has not been made by that time, the matter may be referred to the Attorney General for collection.

VI

In the event the licensee requests a hearing as provided above, the issues to be considered at such a hearing shall be:

a. whether the licensee was in noncompliance with the Commission's regulations and the conditions of the license as set forth in the Notice of Violation referenced in Section II and III above; and,

b. whether on the basis of such items of noncompliance, this Order should be sustained.

Dated at Bethesda, Maryland this 17th day of December 1980.

For the Nuclear Regulatory Commission.

Victor Stello, Jr.,

Director, Office of Inspection and Enforcement.

Appendix A—Evaluations and Conclusions

For each item of noncompliance and associated civil penalty identified in the Notice of Violation (dated June 23, 1980) the original item of noncompliance is restated and the Office of Inspection and Enforcement's evaluation and conclusion regarding the licensee's responses to each item (received July 21, 1980) is presented.

1. Statement of Noncompliance for Item 1

10 CFR 20.207(b) requires that licensed material in a unrestricted area and not in storage be under the constant surveillance and immediate control of the licensee.

Contrary to the above, a Technical Operations Model 533 radiographic exposure device containing a 45 curie iridium-192 sealed source was left in an unrestricted area for periods up to one hour without being under the constant surveillance and immediate control of the licensee. This occurred at a field site in Bolingbrook, Illinois, on April 25 and 29, 1980.

This violation had the potential for causing an occurence related to health and safety.

(Civil Penalty—$3,000.00).

Licensee's Response to Item 1

The response from the licensee stated, in part:

We contend the radiographer did not expropriate his responsibilities to 10 CFR 20.207(b) during radiographic operations as inferred, but that he returned the source to its shielded container, surveyed it to assure its proper position and locked it. We assert that the immediate control of the licensed material was maintained through surveying and locking the exposure device. The radiographer then developed his film. This was when constant surveillance lapsed. The radiographic exposure device was not maintained under constant eyesight while the radiographer developed his film. We cannot dispute this point.

The concept constant surveillance of licensed material in an unrestricted area, however, is ambiguous. We received on a regular basis radioactive licensed material in unlocked containers which are not under the constant surveillance of a radiographer or a radiographer's assistant as they travel on common carriers and through busy airports. One of the reasons cited by the NRC for the potential occurrence detrimental to health and safety was the possibility of theft of our exposure device. The interception of the unlocked transitory licensed material would be much more probable than in our case where the surveyed and locked exposure device was left in close proximity to the licensee. We feel only an individual with a knowledge of the operation of exposure devices who had an intent to steal the source could have caused such an occurrence.

Evalutation of Licensee's Response to Item 1

10 CFR 20.207(b) states that licensed materials in an unrestricted area shall be tended under constant surveillance and immediate control of the licensee. Common dictionary definitions define surveillance as "close observation." Therefore, constant surveillance means constant close observation. The radiographer's action of leaving the exposure device unattended for periods of greater than one hour cannot be construed as meeting the requirements of 10 CFR 20.207(b). In addition, during radiographic operations, although the sealed source assembly was secured in the shielded position each time the source was returned to that position, as required by 10 CFR 34.22(a), the exposure device was not kept locked when not under the direct surveillance of a radiographer or radiographer's assistant.

NRC shares your concern about the potential problem of transporting licensed radioactive material in unlocked containers by common carriers and through busy airports. To minimize these risks, the U.S. Department of Transportation (DOT) regulations include a requirement for a security seal on the package while it is in transit. This seal, while intact, provides evidence that the package has not been illicitly opened. As you may be aware, common and contract carriers are not subject to licensing by, or requirements of the NRC; however, they are subject to the transportation requirement of DOT.

Conclusion

The item as stated is an item of noncompliance. The information presented by the licensee does not provide a basis for modification of this enforcement action.

2. Statement of Noncompliance for Item 2

10 CFR 34.42 requires areas in which radiography is being performed to be conspicuously posted with a sign or signs bearing the radiation caution symbol and words: "Caution—High Radiation Area" and "Caution Radiation Area."

Contrary to the above, no "Caution—High Radiation Area" or "Caution Radiation Area" signs were posted at a field site in Bolingbrook, Illinois, where radiographic exposures were being performed on April 25, and 29, 1980.

This is an infraction (Civil Penalty—$2,000.00).

Licensee's Response to Item 2

In the response the licensee stated, in part:

The failure to post these signs was not without contemplation and certainly was not a malicious disregard for 10 CFR 34.32 or our Operating Procedures. The field site where the above infraction occurred is frequented by automobile and truck traffic, only very rarely by pedestrians.

In these occasions we have felt that the less attention which is drawn to the area the better. This assures normal traffic flow and the prevention of gapers who might possibly accumulate an unwarranted radiation dose. Our radiographer maintained constant control through visual contact with the entire area.

Evaluation of Licensee's Response to Item 2

10 CFR 34.42 states that areas in which radiography is being performed shall be conspicuously posted with signs bearing the radiation symbol and the words: "Caution—Radiation Area" and "Caution—High Radiation Area." No provision is made in the regulations for exemption from this requirement at the whim of the radiographer or licensee.

Furthermore the radiographer stated that he seldom used warning signs on field jobs except when radiography was performed inside a building. He also stated that posting signs during pipeline work added a lot of work and slowed down production. This kind of attitude toward the requirements by a radiographer, in this case a Field Manager, shows a careless disregard for radiation safety.

Although the site where the infraction occurred is most frequented by automobile and truck traffic rather than pedestrians, it should also be noted that the pipe trench passed through the back yards of houses in a residential area and did not necessarily preclude pedestrian traffic.

In the response the licensee stated that the radiographer maintained constant control through visual contact with the entire area. This was not the case as demonstrated by the following events.

On April 25, 1980 two NRC inspectors observed the radiographer make several radiographic exposures. During these exposures they observed that a pipeline company truck occupied by two individuals was parked on the shoulder of the road along Route 53. This was about 25 feet from the exposed radiographic source. In the instant case, radiation from the exposed source was attenuated by the edge of an earth embankment and the individuals in the truck were not exposed to unnecessary radiation. When questioned about this matter the radiographer stated that he was not aware of the parked truck.

During another exposure sequence on April 25, 1980, the NRC inspectors observed a welder standing in the pipe trench about 25 feet from the exposed source. The welder was in a position where the collimator would provide maximum attenuation of the radiation field. Subsequent to this observation, the NRC inspectors made independent measurements during a re-enactment and noted the radiation level was 6 mR/hr at a position similar to where the welder was standing. When questioned

about this matter, the radiographer stated he did not see the welder standing in the pipe trench during the time the radiography source was exposed.

The licensee's contention that gapers might possibly accumulate unwarranted radiation doses is not well founded since, if the radiographic area was properly posted and the radiographer was controlling access to the area, gapers would be at a distance sufficient to assure their safety.

Conclusion

The item as stated is an item of noncompliance. The information presented by the licensee does not provide a basis for modification of this enforcement action.

3. Statement of Noncompliance for Items 3(a) and 3(b)

10 CFR 34.33(a) prohibits an individual from acting as a radiographer or a radiographer's assistant unless, at all times during radiographic operation, each such individual wears a direct reading pocket dosimeter and either a film badge or a thermoluminescent dosimeter. 10 CFR 34.33(b) requires pocket dosimeters to be read and exposures recorded daily.

a. Contrary to 10 CFR 34.33(a), a radiographer made radiographic exposures without wearing a film badge or a thermoluminescent dosimeter. Specifically, the radiographer made radiographic exposures during June 1979 while his film badge was left inside his tackle box which was left in the exposure room.

b. Contrary to 10 CFR 34.33(b), another radiographer did not read his pocket dosimeter and record the exposures on April 24, 25, and 28, 1980, days on which he made radiographic exposures.

This is an infraction. (Civil Penalty—$1,500.00).

Licensee's Response to Item 3(a)

In the response the licensee stated, in part:

The radiographer who had a high film badge reading was neither operating an exposure device nor wearing his film badge when it was exposed. The film badge in his tackle box which was adjacent to a projector which was left in what became a radiation area. The radiographer's intent was to have the film badge with him the next day to conform to 10 CFR 34.32(a). To him, the most logical place to leave his film badge was in his tackle box that was left at the shop which subsequently became the radiation area. He was not present nor was he performing radiographic operations when the exposure occurred.

Evaluation of Licensee Response to Item 3(a)

During the April 30, 1980, inspection at the home office in Blue Island, Illinois, the NRC inspectors discussed this matter with the RSO and with the President of Superior Industrial X-Ray Company. Also, on May 12, 1980, a meeting was held with the President of Superior Industrial X-Ray Company at the NRC's Region III office in Glen Ellyn, Illinois. During both meetings the occurrence was reviewed with the President and based on his statements it was NRC's understanding that the radiographer made radiographic exposures without wearing a film badge or a thermoluminescent dosimeter. However, the information supplied in the licensee's letter, received July 21, 1980, was not brought to our attention previously.

Conclusion

Since we cannot confirm that an individual acted as a radiographer without wearing a film badge or a thermoluminescent dosimeter, this apparent item of noncompliance will be deleted from our records. Accordingly, the information presented by the licensee provides a basis for mitigation of the proposed penalties for Items 3(a) and 3(b) by $750.

Licensee's Response to Item 3(b)

The licensee responded in part, that the radiographer's error was not in the failure to monitor his dosimeter daily but in his failure to record the exposure.

Evaluation of Licensee's Response to Item 3(b)

This item of noncompliance is based on statements made to two NRC inspectors by a licensee radiographer during a field inspection on April 29, 1980. On that date, the radiographer stated he did not read his dosimeter on April 24, 25 and 28, 1980. Therefore, this item of noncompliance is constituted both by the failure to read a dosimeter and for failure to maintain a record on three specific days on which the individual performed radiographic exposures. The civil penalty is imposed primarily for the failure to read the dosimeter. Reading of the dosimeter is an extremely important act for determining the safe conduct of radiographic operations. It is also important for determining the radiographer's accumulating radiation exposure.

Conclusion

The item as stated is an item of noncompliance. The information presented by the licensee does not provide a basis for modification of this enforcement action.

4. Statement of Noncompliance for Items 4(a) 4(b) and 4(c)

License Condition No. 16 requires that the licensee possess and use licensed material in accordance with statements, representations and procedures contained in certain referenced documents.

a. One of these documents, the license application dated January 22, 1979, as amended August 27, 1979, states in the licensee's Operating and Emergency Procedures that the radiographer will check the perimeter of the restricted area with a gamma radiation survey meter.

Contrary to the above, the radiographer did not check the perimeter of the restricted area using a gamma radiation survey meter, at a field site in Bolingbrook, Illinois, where radiography was performed on April 25 and 29, 1980.

This is an infraction. (Civil Penalty—$1,000.00)

B. One of these documents, the license application dated January 22, 1979, states on page 18 of the Operating and Emergency Procedures Manual, "The outside surface of the vehicle shall be monitored with a survey meter to determine that the amount of radiation is not in excess of 2 milliroentgens per hour. The cab of the vehicle shall be monitored to determine that the radiation level within the cab does not exceed 2 milliroentgens per hour."

Contrary to the above, no radiation survey was made on April 28, 1980, of a vehicle that was used to transport a radiographic exposure device from the licensee's home office in Blue Island, Illinois, to a field site in Bolingbrook, Illinois, and back to the Blue Island, Illinois location.

This is a deficiency. (Civil Penalty—$300.00)

c. One of these documents, the license application dated January 22, 1979, as amended August 27, 1979, includes in the licensee's Management and Administrative Procedures Manual a description of the licensee's internal audit system. Section 6 of this Manual states that the licensee's Internal Audit System shall be performed on the licensee's radiographers at least quarterly on an announced or unannounced basis.

Contrary to the above, a review of the licensee's Internal Audit records on April 30, 1980, showed the required audit was not made at the required interval for seven radiographers.

This is an infraction. (Civil Penalty—$2,000.00)

Licensee's Response to Item 4(a)

In the response the licensee stated, in part:

This infraction concerns the failure to perform a survey of the restricted area. We feel that this is a restatement of Item 2 of the Appendix A in which the restricted area was not posted. This item states that this unposted area was not surveyed. The radiographer however maintained constant control over the entire area in which exposures were made. We feel that there was not a potential for causing an occurrence detrimental to the health and safety of the general public.

Evaluation of Licensee's Response to Item 4(a)

The licensee stated this item of noncompliance appears to be a restatement of Item 2 of the Appendix A in which the restricted area was not posted. However, the two items of noncompliance are not related. Radiation warning signs are used to inform nonradiation workers and members of the public that a hazardous activity is in progress and the areas should be avoided. The requirement for making a survey of the perimeter of the restricted area is to assure that the boundaries are defined in accordance with radiation levels permitted in unrestricted area as defined in 10 CFR 20.105(b). In addition, the licensee's Operating and Emergency Procedures state such surveys will be made and this commitment is incorporated into the license by reference. One of the purposes of defining the boundaries of the unrestricted area is to determine the location or placement of the radiation caution signs and to determine the perimeter of the area which must be accessible only to authorized radiography personnel.

The licensee stated that the radiographer maintained constant control over the entire area. This statement is unsupported as was previously discussed in our evaluation of the licensees' response to Item 2.

Conclusion

The item as stated is an item of noncompliance. The information presented by the licensee does not provide a basis for modification of this enforcement action.

Licensee's Response to Item 4(b)

In the response the licensee stated, in part:

Our general policy is that this survey is to be made at the time the source is placed in the vehicle prior to leaving the home office. Here again is a restatement of the radiographers failure to perform proper record keeping on a daily basis.

Evaluation of Licensee's Response to Item 4(b)

The licensee stated the general policy is that the survey will be made at the time the source is placed in the vehicle and prior to leaving the home office. The response also implies that the survey was made but the radiographer failed to make a proper record of the survey. However, during a field inspection on April 29, 1980, a licensee radiographer stated to two NRC inspectors that no vehicle survey was performed on April 28, 1980. therefore, the basis of this item of noncompliance is failure to perform a required survey and not for failure to make a record of the results of a survey.

Conclusion

The item as stated is an item of noncompliance. The information presented by the licensee does not provide a basis for modification of this enforcement action.

Licensee's Response to Item 4(c)

In the response the licensee stated, in part:

Our Quality Assurance Manager performed an Internal Audit described in Section 6 of that manual. We performed this action as required in our Operating and Emergency Procedures. We appeal this Civil Penalty on the basis that it had been corrected internally prior to this audit and ask for mitigation.

Evaluation of Licensee's Response to Item 4(c)

It appears from the licensee's letter that licensee management personnel completed the audit for all radiographers and radiographer's assistants prior to the NRC Inspection which was conducted on April 25, 29 and 30, 1980. However, during the field inspection on April 29, 1980, Michael Turner, a radiographer, stated to two NRC inspectors he was the field manager and one of his duties was to perform field audits of all radiographers and radiographer's assistants. However, because of the workload he had been unable to perform the required audits. This statement was substantiated by the RSO, Helen T. Paluch, during the inspection at the home office in Blue Island, Illinois, on April 30, 1980. In addition, the licensee's records showed that three radiographers, Michael Turner, Thomas Green and Roger Hickman, had never been audited and four other radiographers had not been audited between November 5, 1979, and April 30, 1980 (the date of this inspection). The RSO, Helen T. Paluch, confirmed that these individuals all worked routinely as radiographers or radiographer's assistants during this period.

Conclusion

The item as stated is an item of noncompliance. The information presented by the licensee does not provide a basis for modification of this enforcement action.

5. Statement of Noncompliance for Item 5

10 CFR 10.13(a) requires that the licensee furnish a report of radiation exposure data to individuals on termination of employment and this report shall contain certain specified information.

Contrary to the above, reports submitted to two former employees did not contain the following statement as required by 10 CFR 19.13(a): "This report is furnished to you under the provisions of the Nuclear Regulatory Commission regulation 10 CFR Part 19. You should preserve this report for further reference."

This is a deficiency. (Civil Penalty—$0.00)

Licensee's Response to Item 5

The licensee responded in part, that the deficiency was immediately rectified by its addition to said report while NRC auditors were present at our home office.

Evaluation of Licensee's Response to Item 5

The NRC inspection substantiated that the corrective action was completed during the inspection as stated by the licensee.

Conclusion

Appropriate corrective action for this item of noncompliance was taken during the inspection. As a result, no Civil Penalty was proposed for this item of noncompliance.

6. Statement of Noncompliance for Item 6

10 CFR 34.27 requires that each licensee shall maintain current utilization logs showing for each sealed source the following information:

(a) A description of the radiographic exposure device in which the sealed source is located; (b) the identity of the radiographer to whom assigned: and, (c) the plant or site where used and the dates of use.

Contrary to the above, no utilization log was maintained for radiographic exposures performed on April 24, 25 and 28, 1960 at the Bolingbrook, Illinois, field site.

This is a deficiency. (Civil Penalty—$0.00)

Licensee's Response to Item 6

In the response the licensee stated:

This deficiency, the failure of the radiographer to complete his daily utilization log has been specifically mentioned in Items 3(b), 4(b) and here again in Item 6. The Civil Penalties proposed for our radiographer's incomplete recordkeeping of a single document amount to eighteen hundred dollars, although no Civil Penalty is proposed in this particular instance. The corrective action stated in Item 3 applies here again.

Evaluation of Licensee's Response to Item 6

In the response the licensee states that the items of noncompliance noted in Items 3(b), 4(b) and 6 all related to a single document which shows incomplete recordkeeping. However, NRC inspection findings show that Item 3(b) was a citation for failure to read and record dosimeter results on April 24, 25, and 28, 1980. The civil penalty however, was primarily for failure to read the dosimeter. Also, NRC inspection findings show that Item 4(b) was a citation for failure to perform a survey of a vehicle on April 28, 1980, and not for failure to record the results of a vehicle survey. Therefore, the significance of these citations was not for failures to maintain records but instead were citations for failure to read a dosimeter and to perform a survey as required. In the case of the item of noncompliance noted in Item 6 this is clearly a failure to maintain a record.

Conclusion

The item as stated is an item of noncompliance. However, no Civil Penalty was proposed for this item of noncompliance. It is administrative in nature and has minor safety significance.

[FR Doc. 80-40642 Filed 12-30-80; 8:45 am]

BILLING CODE 7590-01-M

[Docket No. 50-327]

Tennessee Valley Authority; Issuance of Amendment Facility Operating License No. DPR-77

The U.S. Nuclear Regulatory Commission (the Commission) has issued Amendment No. 1 to Facility Operating License No. DPR-77, issued to Tennessee Valley Authority (licensee) for the Sequoyah Nuclear Plant, Unit 1 (the facility) located in Hamilton County, Tennessee. This amendment covers the authorization given on September 23, 1980, to TVA to proceed with proposed changes to the Technical Specifications which permitted testing of certain valves in a different Mode of plant operation as well as at different leakage rates for a 30-day period.

The application for the amendment complies with the standards and requirements of the Atomic Energy Act of 1954, as amended (the Act), and the Commission's regulations. The Commission has made appropriate findings as required by the Act and the Commission's regulations in 10 CFR Chapter I, which are set forth in the license amendment. Prior public notice of this amendment was not required since the amendment does not involve a significant hazards consideration.

The Commission has determined that the issuance of this amendment will not result in any significant environmental impact and that pursuant to 10 CFR 51.5(d)(4) an environmental impact statement, or negative declaration and environmental impact appraisal need not be prepared in connection with issuance of this amendment.

For further details with respect to this action, see (1) Tennessee Valley Authority letter, dated September 24, 1980, (2) Amendment No. 1 to Facility Operating License No. DPR-77 with Appendix A Technical Specification page changes, and (3) the Commission's related Safety Evaluation.

All of these items are available for public inspection at the Commission's Public Document Room, 1717 H Street, N.W., Washington, D.C., and the Chattanooga Hamilton County Bicentennial Library, 1001 Broad Street, Chattanooga, Tennessee 37402. A copy of Amendment No. 1 may be obtained upon request addressed to the U.S. Nuclear Regulatory Commission, Washington, D.C. 20555, Attention: Director, Division of Licensing.

Dated at Bethesda, Md., this 22nd day of December 1980.

For the Nuclear Regulatory Commission.

A. Schwencer,

Chief, Licensing Branch No. 2, Division of Licensing.

[FR Doc. 80-40643 Filed 12-30-80; 8:45 am]

BILLING CODE 7590-01-M

[Docket No. 50-338]

Virginia Electric and Power Co.; Issuance of Amendment to Facility Operating License

The U.S. Nuclear Regulatory Commission (the Commission) has issued Amendment No. 22 to Facility Operating License No. NPF-4 issued to the Virginia Electric and Power Company (the licensee) for operation of the North Anna Power Station, Unit No. 1 (the facility) located in Louisa County, Virginia. The amendment is effective as of its date of issuance.

The amendment makes changes in the axial power distribution surveillance turn on power and part power axial flux difference limits. The changes ensure that the total peaking factor as a function of core height limits currently specified for the facility will continue to be met for the remainder of Cycle 2 and the forthcoming Cycle 3 operations.

The application for the amendment complies with the standards and requirements of the Atomic Energy Act of 1954, as amended (the Act), and the Commission's rules and regulations. The Commission has made appropriate findings as required by the Act and the Commission's rules and regulations in 10 CFR Chapter I, which are set forth in the license amendment. Prior public notice of this amendment was not required since this amendment does not involve a significant hazards consideration.

The Commission has determined that the issuance of this amendment will not result in any significant environmental impact and that pursuant to 10 CFR 51.5(d)(4) an environmental impact statement or negative declaration and environmental impact appraisal need not be prepared in connection with issuance of this amendment.

For further details with respect to this action, see (1) the application for amendment dated November 10, 1980; (2) Amendment No. 22 to Facility Operating License No. NPF-4; and (3) the Commission's related Safety Evaluation. These items are available for public inspection at the Commission's Public Document Room, 1717 H Street, N.W., Washington, D.C. 20555 and at the Board of Supervisor's Office, Louisa County Courthouse, Louisa, Virginia 23093 and at the Alderman Library, Manuscripts Department, University of Virginia, Charlottesville, Virginia 22901. A copy of items (2) and (3) may be obtained upon request to the U.S. Nuclear Regulatory Commission, Washington, D.C. 20555, Attention: Director, Division of Licensing.

Dated at Bethesda, Md., this 10th day of December 1980.

For the Nuclear Regulatory Commission.

Robert A. Clark,

Chief, Operating Reactors Branch No. 3, Division of Licensing.

[FR Doc. 80-40637 Filed 12-30-80; 8:45 am]

BILLING CODE 7590-01-M

SECURITIES AND EXCHANGE COMMISSION

[Release No. 34-17390]

Denial of Petition for Rulemaking Concerning the Need for Consistent Disclosure

AGENCY: Securities and Exchange Commission.

ACTION: Denial of petition.

SUMMARY: The Commission today issued a release announcing its denial of a rulemaking petition concerning the need for consistent disclosure submitted by Public Citizen.

FOR FURTHER INFORMATION CONTACT: Stephen W. Hamilton (202) 272-2390 Division of Corporation Finance, Securities and Exchange Commission, Washington, D.C. 20549.

SUPPLEMENTARY INFORMATION: The Securities and Exchange Commission today issued a release announcing its denial of the rulemaking petition submitted by Public Citizen. The proposed rules generally would have required corporations to disclose in their filings with the Commission any material information submitted to agencies or courts regarding the effect of regulations, and to file any agency or court submissions regarding the cost of regulations with the Commission. The Commission's Secretary today has transmitted a letter to counsel for Public Citizen briefly setting forth the reasons the Commission determined to deny Public Citizen's petition for rulemaking. A copy of this letter is attached.

By the Commission.

George A. Fitzsimmons,

Secretary.

December 18, 1980.

Re: Petition to Require Consistent Disclosure File No. 4-233.

Frederic Townsend, Esq.,
Alan B. Morrison, Esq.,
Counsel for Public Citizen, Suite 700, 2000 P Street, N.W., Washington, D.C.

Dear Messrs. Townsend and Morrison: This is in response to the rulemaking petition (the "petition") filed by Public Citizen on May 5, 1980, as supplemented on May 27, 1980, concerning the need to require consistent disclosure.

Briefly summarized, the petition requests that the Commission adopt three rules which would (1) require every reporting corporation to disclose in its periodic reports any material information contained in submissions by the corporation or its representative to other government entities regarding the financial impact of (2) proposed or implemented statutes, rules, regulations or proceedings; deem the above submissions to be material if the stated cost of the proposed rule or regulation, if implemented, exceeds two percent of the corporation's consolidated average net income or loss for the last three years; and (3) require all such submissions, regardless of materiality, to be filed with, and made publicly available by, the Commission. The Commission has determined to deny the petition. This letter shall constitute a brief statement of the grounds for such denial.

The Commission believes that its existing rules and regulations currently require disclosure of all material information relating to the impact of proposed or implemented statutes, rules, regulations or other actions of government entities. Whether the disclosure is required depends upon a balancing of the likelihood of a proposed rule's enactment and the magnitude of the rule's impact on the corporation if enacted in its proposed form. *See SEC* v. *Texas Gulf Sulphur Co.*, 401 F. 2d 833, 849 (2d Cir. 1968), *cert. denied*, 394 U.S. 976 (1969); *SEC* v. *Mize*, 615 F. 2d 1046 (5th Cir. 1980), *cert. denied*, 49 U.S.L.W. 3267 (Oct. 14, 1980). Inconsistent disclosures may give rise to concerns about the adequacy of the information contained in Commission filings. If it appears that material misstatements or omissions have been made in filings with the Commission or have been otherwise publicly disseminated, the Commission will pursue whatever inquiries or remedial measures are in its opinion appropriate under the circumstances. In view of the scope of the disclosure requirements of the federal securities laws, the Commission does not believe that it is necessary to adopt the specific disclosure provision or materiality standard proposed by the petition's first and second rules. Largely for these reasons, while *per se* tests may be necessary for the effective implementation of certain disclosure provisions, the Commission does not believe that an objective test (such as that proposed in rule two) is desirable in assessing the materiality of proposed regulatory actions.

With respect to the third rule proposed by the petition, the Commission does not believe that is is consistent with its statutory responsibilities to require the filing of, or to act as central depository for, all agency cost submissions. In the Commission's view, information in such submissions which is material to an informed investment decision and the protection of investors will be made publicly available through disclosures contained in filings with the Commission. It does not appear appropriate, however, to use the securities disclosure process to obtain other information, which may be primarily of interest to the general public or to particular non-investor constituencies.

Although the Commission does not believe that the rules proposed by the petition are necessary or appropriate for the effective administration of the federal securities laws, the Commission does recognize, in its capacity as one of several regulatory agencies, that to the extent corporations actually do engage in a widespread practice of making inconsistent disclosure to various government entities, this practice could well be a matter of general concern to all regulatory bodies. Therefore, the Commission is furnishing a copy of your petition and this response to the U.S. Regulatory Council, of which the Commission is a member, for its information.

The Commission thanks you for your interest in this matter.

By the Commission.

George A. Fitzsimmons,

Secretary.

[FR Doc. 40589 Filed 12-30-80; 8:45 am]
BILLING CODE 8010-01-M

[Release No. 21846; 70-6528]

Alabama Power Co., et al.; Proposed Issuance of First Mortgage Bonds for Sinking Fund Purposes

December 19, 1980.

In the Matter of Alabama Power Company, P.O. Box 2641, Birmingham, Alabama 35291; Georgia Power Company, P.O. Box 4545, Atlanta, Georgia 30302; Gulf Power Company, P.O. Box 1151, Pensacola, Florida 52520; Mississippi Power Company, P.O. Box 4079, Gulfport, Mississippi 39501.

Notice is hereby given that Alabama Power Company ("Alabama"), Georgia Power Company ("Georgia"), Gulf Power Company ("Gulf") and Mississippi Power Company (Mississippi) all of which are public utility subsidiaries of the Southern Company, a registered holding company, have filed a declaration and an amendment thereto with this Commission pursuant to the Public Utility Holding Company Act of 1935 ("Act") designating Sections 6 and 7 of the Act and Rule 50(a)(5) promulgated thereunder as applicable to the proposed transactions.

Alabama, Georgia, Gulf and Mississippi propose to obtain the authentication and delivery of certain series of their respective First Mortgage Bonds and to surrender such bonds to the trustee under their respective indentures to satisfy sinking fund (improvement fund in the case of Alabama) requirements provided for in their Indentures to be satisfied on or prior to June 1, 1981.

The indentures provide for annual sinking fund (improvement fund) payments on or before June 1 of each year in an amount equal to 1% of the principal amount of bonds authenticated under the indenture prior to the preceding January 1 (less bonds retired directly or indirectly as a result of the release of property and less bonds authenticated to refund other bonds). Payment may be made in cash or in principal amount of bonds authenticated under the indenture, whether or not such bonds have previously been disposed of by the respective company. Any cash so deposited is to be used by the trustee under the respective indenture for the redemption or other retirement of bonds of such series as may be designated by the respective company or may be

withdrawn by that company against the deposit of bonds.

The amounts and the series of bonds proposed to be issued are as follows:

Name of company	Amount	Series (pct)
Alabama	$22,014,000	3½ Due 1985.
Georgia	25,226,000	3⅛ Due 1984.
Gulf	3,609,000	3¼ Due 1984.
Mississippi	2,874,000	3½ Due 1981.

The bonds will be issued on the basis of unfunded net property additions. Under the indentures the bonds may be issued in principal amounts not exceeding 60% of the amount of unfunded net property additions. The approximate amounts of such unfunded net property additions available for the issuance of the Bonds are as follows:

Name of company	Amount	As of
Alabama	$773,000,000	Sept. 30, 1980.
Georgia	379,000,000	Sept. 30, 1980.
Gulf	45,000,000	Sept. 30, 1980.
Mississippi	39,000,000	Sept. 30, 1980.

The approximate amounts of the unfunded net property additions necessary to issue the Bonds are as follows:

Name of company	Amount
Alabama	$36,690,000
Georgia	42,043,000
Gulf	6,015,000
Mississippi	4,790,000

The surrender of the bonds in satisfaction of the respective sinking fund (improvement fund) requirements will make available for general corporate purposes cash which would otherwise have to be used to satisfy such requirements or to purchase bonds to be used for such purposes, while at the same time reducing the principal amount of bonds which they could otherwise issue under the indenture at a later time by an equal principal amount. The bonds will not be delivered by the companies in such a manner as to make them obligation for the payment of money. Therefore, they will not be included on the books or in the published statements as liabilities of the respective companies.

The fees, commissions and expenses incurred or to be incurred directly or indirectly by Alabama, Georgia, Gulf, and Mississippi in connection with the issuance of the bonds are estimated at $6,000 including $1,600 for legal fees of the companies and $4,000 for charges of the trustees and their counsel. The Alabama Public Service Commission, the Georgia Public Service Commission and the Florida Public Service Commission have jurisdiction over the issuance of the bonds by Alabama, Georgia and Gulf respectively. No other state or federal commission other than this Commission has jurisdiction over the proposed transaction.

Notice is further given that any interested person may, not later than January 12, 1981, request in writing that a hearing be held on such matter, stating the nature of his interest, the reasons for such request, and the issues of fact or law raised by said declaration which he desires to controvert; or he may request that he be notified if the Commission should order a hearing thereon. Any such request should be addressed: Secretary, Securities and Exchange Commission, Washington, D.C. 20549. A copy of such request should be served personally or by mail upon the declarants at the above-stated address and proof of service (by affidavit or, in case of any attorney at law, by certificate) should be filed with the request. At any time after said date, the declaration, as filed or as it may be amended, may be permitted to become effective as provided in Rule 23 of the General Rules and Regulations promulgated under the Act, or the Commission may grant exemption from such rules as provided in Rules 20(a) and 100 thereof or take such other action as it may deem appropriate. Persons who request a hearing or advice as to whether a hearing is ordered will receive any notices or orders issued in this matter, including the date of the hearing (if ordered) and any postponements thereof.

For the Commission, by the Division of Corporate Regulation, pursuant to delegated authority.

George A. Fitzsimmons,

Secretary.

[FR Doc. 80-40596 Filed 12-30-80; 8:45 am]

BILLING CODE 8010-01-M

[Release No. 11499; 811-2776]

American Medical Association Tax-Exempt Income Fund, Inc.; Filing of Application

December 19, 1980.

Notice is hereby given that American Medical Association Tax-Exempt Income Fund, Inc. ("Applicant"), 535 North Dearborn Street, Chicago, Illinois 60610, registered under the Investment Company Act of 1940 ("Act") as an open-end, diversified, management investment company, filed an application on October 22, 1980, and amendments thereto on October 28, 1980, and December 15, 1980, pursuant to Section 8(f) of the Act, for an order of the Commission declaring that Applicant has ceased to be an investment company as defined in the Act. All interested persons are referred to the application on file with the Commission for a statement of the representations contained therein, which are summarized below.

Applicant, a Maryland corporation, registered under the Act on September 30, 1977. Applicant's Investment Adviser is Continental Illinois National Bank and Trust Company of Chicago; its Administrator is the American Medical Association. On September 30, 1977, Applicant filed a registration statement on Form S-5 under the Securities Act of 1933 covering 5,000,000 shares of its common stock in connection with a proposed public offering of its shares. On March 3, 1978, upon the effectiveness of this 1933 Act registration statement Applicant commenced a public offering of its common stock. As of September 17, 1980, 410,276.77 shares of Applicant's common stock were outstanding with a net asset value of $7.30 per share (approximately $2,994,066 aggregate).

The application states that on July 18, 1980, Applicant's board of directors authorized and approved an Agreement and Plan of Reorganization ("Agreement") providing for the transfer of substantially all of Applicant's net assets to Nuveen Municipal Bond Fund, Inc. ("Nuveen"), an open-end, diversified, management investment company registered under the Act, in exchange for shares of Nuveen common stock. The Agreement called for distribution of Nuveen's shares to Applicant's stockholders and the subsequent dissolution of Applicant. Applicant sates that its stockholders approved the Agreement at a special meeting held on September 16, 1980, with 77.66% of the outstanding shares voting in favor.

Applicant further states that on September 18, 1980, its net assets (consisting of cash and securities valued at $2,926,921 or $7.28 per share),[1] were transferred to Nuveen, after payment of or provision for all known liabilities of Applicant, including liquidation expenses, in exchange for 395,657 shares of Nuveen common stock having a net asset value of $7.55 per share. According to the application, the Nuveen shares

[1] The net asset value per share figure of $7.28 as of September 18, 1980, calculated by Nuveen differs from the valuation figure of $7.30 per share quoted by Applicant a day earlier. Applicant attributes the difference to the fact that Nuveen utilized a different evaluation method than Applicant in arriving at the net asset value per share amount.

were thereafter distributed pro rata to Applicant's stockholders. Applicant states that it is liable for approximately $50,063.43 in legal, accounting and printing costs incurred in connection with Applicant's transfer of assets, and that these costs will be borne in full by Applicant's Investment Adviser and Administrator.

The application states that Applicant retained assets in the amount of $1,150.46 as of October 28, 1980, to pay certain accrued expenses of the Applicant unrelated to the Applicant's transfer of assets. The retained assets were not invested in any securities. Applicant further states that approximately $500 of these retained funds will not be required to meet actual billed expenses and will be paid to the Investment Adviser and Administrator because the Investment Adviser and Administrator reimbursed Applicant, pursuant to an expense limitation arrangement, an amount greater than Applicant was entitled to receive.

The application states that Applicant is not a party to any pending litigation or administrative proceeding and, further, that Applicant is not currently engaged in any business activities other than those necessary for the winding up of its affairs. Applicant is presently in good standing under the corporate laws of Maryland; however, Applicant states that it will file articles of dissolution with the state terminating its legal existence upon receipt of the requested order. Finally, Applicant states that it has not within the last eighteen months transferred any of its assets to a separate trust the beneficiaries of which were or are securityholders of Applicant.

Section 8(f) of the Act provides, in pertinent part, that whenever the Commission, on its own motion or upon application, finds that a registered investment company has ceased to be an investment company, it shall so declare by order and, upon the effectiveness of such order, the registration of such company shall cease to be in effect.

Notice is further given that any interested person may, not later than January 12, 1981, at 5:30 p.m., submit to the Commission in writing a request for a hearing on the application accompanied by a statement as to the nature of his interest, the reasons for such request, and the issues, if any, of fact or law proposed to be controverted, or he may request that he be notified if the Commission shall order a hearing thereon. Any such communication should be addressed: Secretary, Securities and Exchange Commission, Washington, D.C. 20549. A copy of such request shall be served personally or by mail upon Applicant at the address stated above. Proof of such service (by affidavit or, in the case of an attorney-at-law, by certificate) shall be filed contemporaneously with the request. As provided by Rule 0-5 of the Rules and Regulations promulgated under the Act, an order disposing of the application herein will be issued as of course following said date unless the Commission thereafter orders a hearing upon request or upon the Commission's own motion. Persons who request a hearing, or advice as to whether a hearing is ordered, will receive any notices and orders issued in this matter, including the date of the hearing (if ordered) and any postponements thereof.

For the Commission, by the Division of Investment Management, pursuant to delegated authority.

George A. Fitzsimmons,

Secretary.

[FR Doc. 80-40590 Filed 12-30-80; 8:45 am]

BILLING CODE 8010-01-M

[Release No. 21849; 70-6531]

Arkansas Power & Light Co.; Proposed Pollution Control Financing

December 22, 1980.

Notice is hereby given that Arkansas Power & Light Company ("AP&L"), First National Building, Little Rock, Arkansas 72203, a public utility subsidiary of Middle South Utilities, Inc., a registered holding company, has filed an application-declaration with this Commission pursuant to the Public Utility Holding Company Act of 1935 ("Act"), designating Sections 9(a), 10 and 12(d) of the Act and Rule 44(b)(3) promulgated thereunder as applicable to the proposed transaction. All interested persons are referred to the application-declaration, which is summarized below, for a complete statement of the proposed transaction.

AP&L is in the process of constructing two 750 MW nominally rated coal-fired generating units known as the Independence Steam Electric Generating Station ("Independence Plant") to be located near Newark, in Independence County, Arkansas ("County"). In addition, in order to comply with prescribed federal, state or local standards with respect to air or water quality or disposal of sewage or solid waste, it has been and will be necessary to construct certain facilities for pollution control purposes at the Independence Plant. AP&L has sold undivided interests aggregating 43.5% in the Independence Plant to Arkansas Electric Cooperative Corporation, the City Water and Light Plant of the City of Jonesboro, Arkansas, the City of Conway, Arkansas, the City of West Memphis, Arkansas and the City of Osceola, Arkansas.

AP&L proposes to dispose of, and to contract to acquire, (i) its anticipated undivided interest ("Pollution Control Facilities") in certain of the pollution control facilities at the Independence Plant and (ii) its anticipated undivided interest ("Industrial Facilities") in certain machinery, equipment and other facilities at the Independence Plant.

In order to effect such transactions, AP&L proposes to enter into two separate installment sale agreements ("Agreements") with the County, which will provide for the acquisition, construction and installation of the Pollution Control Facilities and the Industrial Facilities on behalf of the County. The Agreement relating to the Pollution Control Facilities will contemplate the issuance by the County under a trust indenture between the County and a trustee of not to exceed $50,000,000 aggregate principal amount of its Pollution Control Revenue Bonds, Series 1981 (Arkansas Power & Light Company Project) ("Pollution Control Bonds"), the net proceeds of which would be used to defray the cost of construction of the Pollution Control Facilities. The Agreement relating to the Industrial Facilities will contemplate the issuance by the County under a trust indenture between the County and a trustee of $1,000,000 aggregate principal amount of its Industrial Development Revenue Bonds, Series 1981 (Arkansas Power & Light Company Project) ("Industrial Bonds"), the net proceeds of which would be used to defray the cost of construction of the Industrial Facilities. The operative terms and provisions of the two Agreements and the Pollution Control Bonds and the Industrial Bonds (collectively "Bonds") and the respective indentures ("Indentures") under which they are to be issued will be substantially indentical.

The Agreements will provide for the sale of the Facilities by the County to AP&L, subject to a lien and security interest retained by the County and the payment by AP&L of the purchase price of the Facilities, together with interest thereon, in semi-annual installments over a term of years. In the Agreements, AP&L will assent to the assignment and pledge to the trustee under the Indentures of the rights of the County in the Facilities and of the County's interest in, and of the moneys receivable by the County under, the Agreements,

except for certain rights to indemnification and reimbursement of expenses.

The Agreements will provide that the purchase price of the Facilities payable by AP&L will be such amount as shall be sufficient, together with other moneys held by the trustees under the Indentures and available therefor, to pay the principal of the Bonds as the same become due and payable. AP&L will also agree to pay interest on the unpaid balance of the purchase price of the Facilities equal to the premium, if any, and interest on the Bonds. AP&L will also be obligated to reimburse the County for certain of its expenses incurred in connection with the issuance of the Bonds, including: (i) The fees and charges of the trustee and any paying agent or agents under the Indentures, (ii) all expenses incurred by the County in connection with its rights and obligations under the Agreements, and (iii) all expenses necessarily incurred by the County or the trustee under the Indentures in connection with the transfer or exchange of Bonds.

The Agreements will provide that AP&L at any time prepay all or any portion of the unpaid balance of the purchase price of the Facilities, together with interest thereon, in whole or in part, such payment to be sufficient, together with other moneys held by the trustees under the Indentures and available therefor, to redeem Bonds in the manner and to the extent provided in the Indentures.

The Agreements will also provide that, upon occurrence of certain events relating to the operation of the Independence Plant or the Facilities, AP&L may at any time prepay the entire unpaid balance of the purchase price of the Facilities together with interest thereon. It will also provide that in the case of certain events relating to the taxability of the interest on the Bonds, AP&L shall be obligated to prepay the entire unpaid balance of the purchase price of the Facilities, together with accrued interest. The payments by AP&L in such circumstances shall be sufficient (together with other moneys held by the trustee under the Indentures and available therefor) to pay the principal of all Bonds together with interest accrued or to accrue to the redemption date.

It is proposed that the Bonds will be issued as either serial bonds ("Serial Bonds") or term bonds ("Term Bonds"), or a combination thereof. The Term Bonds, if any, will mature not later than 30 years from the first day of the month in which they are initially issued and will be subject to a mandatory cash sinking fund. Serial Bonds, if any, will mature at various times prior to the maturity of the Term Bonds. The effect of the mandatory cash sinking fund of the Term Bonds, if any, together with the serial maturities of the Serial Bonds, if any, will be calculated to retire no less than 25% of the aggregate principal amount of the Bonds prior to ultimate date of maturity of the Bonds. The Indentures will provide for the application of such of the proceeds of the Bonds which, after completion of the Facilities, may remain unused for the redemption or purchase of the Bonds, at the direction of AP&L.

In order to provide security for the performance of AP&L's obligations under the Agreements. AP&L will grant to the County a lien on and security interest in ("County Lien") the Facilities. The County will assign the County Lien to the trustees pursuant to the Indentures.

The Agreements will provide that prior to the sales of the Facilities by the County to AP&L, AP&L will convey to the County such portions of the Facilities as have already been constructed or acquired by AP&L, subject to the lien of AP&L's Mortgage and Deed of Trust, dated as of October 1, 1944, made by AP&L to Morgan Guaranty Trust Company of New York and John W. Flaherty, as Trustees, as supplemented and amended.

It is contemplated that the Bonds will be sold by the County pursuant to arrangements with a group of underwriters represented by Merrill Lynch, Pierce, Fenner & Smith Incorporated, Kidder, Peabody & Co. Incorporated and Stephens Inc. In accordance with the laws of the State of Arkansas, the interest rate to be borne by the Bonds will be fixed by the County. AP&L will not be party to the underwriting arrangements; however, the Agreements provide that the terms of the Bonds and their sale by the County, shall be satisfactory to AP&L. AP&L understands that interest payable on the Bonds will be generally exempt from federal income taxes. AP&L has been advised that the annual interest rates on obligations, interest on which is tax exempt, can be expected at the time of issuance of the Bonds to be 4% to 5% lower than the rates of obligations of like tenor and comparable quality, interest on which is fully subject to federal income tax.

A statement of the fees, commissions and expenses to be incurred in connection with the proposed transactions will be filed by amendment. The proposed transactions are subject to the jurisdiction of the Arkansas Public Service Commission and the Tennessee Public Service Commission, and upon consummation of the transactions proposed in File No. 70-6376, will be subject to the jurisdiction of the Public Service Commission of Missouri. It is stated that no other state or federal regulatory authority, other than this Commission, has jurisdiction over the proposed transactions.

Notice is further given that any interested person may, not later than January 15, 1981, request in writing that a hearing be held on such matter, stating the nature of his interest, the reasons for such request, and the issues of fact or law raised by the filing which he desires to controvert; or he may request that he be notified if the Commission should order a hearing thereon. Any such request should be addressed: Secretary, Securities and Exchange Commission, Washington, D.C. 20549. A copy of such request should be served personally or by mail upon the applicant-declarant at the above-stated address, and proof of service (by affidavit or, in case of an attorney at law, by certificate) should be filed with the request. At any time after said date, the application-declaration, as filed or as it may be amended, may be granted and permitted to become effective as provided in Rule 23 of the general rules and regulations promulgated under the Act, or the Commission may grant exemption from such rules as provided in Rules 20(a) and 100 thereof or take such other action as it may deem appropriate. Persons who request a hearing or advice as to whether a hearing is ordered will receive any notices or orders issued in this matter, including the date of the hearing (if ordered) and any postponements thereof.

For the Commission, by the Division of Corporate Regulation, pursuant to delegated authority.

George A. Fitzsimmons,

Secretary.

[FR Doc. 80-40588 Filed 12-30-80; 8:45 am]

BILLING CODE 8010-01-M

[File No. 22-10813]

Esterline Corp.; Application and Opportunity for Hearing

December 19, 1980.

Notice is hereby given that Esterline Corporation (the "Company") has filed an application under Clause (ii) of Section 310(b)(1) of the Trust Indenture Act of 1939 (the "Act") for a finding by the Commission that the trusteeship of Manufacturers Hanover Trust Company ("Manufacturers") under an indenture dated as of December 20, 1974 (the "1974 Indenture"), heretofore qualified under the Act, and under a new indenture

dated as October 1, 1980 (the "1980 Indenture"), which was not qualified under the Act, is not so likely to involve a material conflict of interest as to make it necessary in the public interest or for the protection of investors to disqualify Manufacturers from acting as Trustee under such indentures.

The Company alleges that:

(1) As of July 31, 1980, there were issued and outstanding $2,267,950 principal amount of 12½% Subordinated Debentures due April 1, 1995 which were issued by the Company under the 1974 Indenture.

(2) Its wholly-owned subsidiary, Esterline International Finance N.V. ("International"), has issued under the 1980 Indenture among the Company, International and Manufacturers $20,000,000 principal amount of International's 8¼% Convertible Subordinated Guaranteed Debentures due 1995 (the "1980 Debentures"), which were guaranteed on a subordinated basis by the Company. The 1980 Debentures were not registered under the Securities Act of 1933 and the 1980 Indenture was not qualifed under the Act. The underwriters who purchased the 1980 Debentures have agreed not to offer any of the 1980 Debentures in the United States, its territories and possessions, or to nationals or residents thereof.

(3) The 1974 Indenture and the 1980 Indenture are wholly unsecured. All debentures issued under the 1974 Indenture rank equally with the guarantee to the Company of the 1980 Debentures. The Company is a party to the 1980 Indenture solely as guarantor of the 1980 Debentures. Such differences as exist between the 1974 Indenture and the 1980 Indenture are not so likely to involve a material conflict of interest as to make it necessary in the public interest or for the protection of investors to disqualify Manufacturers from acting as trustees under either of said indentures.

The Company has waived notice of hearing and has waived a hearing.

For a more detailed statement of the matters of fact and law asserted, all persons are referred to said application which is a public document on file in the offices of the Commission at 500 North Capitol Street, Washington, D.C. 20549.

Notice is further given that any interested person may, not later than January 12, 1981, request in writing that a hearing be held on such matter, stating the nature of his interest, the reasons for such request, and the issues of fact or law raised by said application which he desires to controvert, or he may request that he be notified if the Commission should order a hearing thereon. Any such request should be addressed: Secretary, Securities and Exchange Commission, Washington, D.C. 20549. At any time after said date, the Commission may issue an order granting the application, upon such terms and conditions as the Commission may deem necessary or appropriate in the public interest and the interest of investors, unless a hearing is ordered by the Commission.

For the Commission, by the Division of Corporation Finance, pursuant to delegated authority.

Shirley F. Hollis,

Assistant Secretary.

[FR Doc. 80-40633 filed 12-30-80; 8:45 am]

BILLING CODE 8010-01-M

[Release No. 11501; 811-2463]

First Ecumenical Fund, Inc.; Proposal To Terminate Registration

December 19, 1980.

Notice is hereby given that the Commission proposes, pursuant to Section 8(f) of the Investment Company Act of 1940 ("Act"), to declare by order on its own motion, that The First Ecumenical Fund, Inc. ("Fund"), 551 Fifth Avenue, New York, New York 10017, registered under the Act as an open-end, diversified management investment company, has ceased to be an investment company as defined in the Act.

Information in the files of the Commission indicates that the Fund was organized on February 7, 1974, under the laws of the State of New York, and filed a Notification of Registration as an open-end, diversified, management investment company with the Commission on March 8, 1974.

In addition, the Fund filed a registration statement (File No. 2-50378) pursuant to the Securities Act of 1933 ("1933 Act") in connection with a proposed public offering of shares of its capital stock. The Fund requested withdrawal of this registration statement, pursuant to Rule 477 under the 1933 Act, and the Commission ordered it withdrawn on June 30, 1976. Finally, information in the files of the Commission indicates that after the withdrawal of its registration statement the Fund was abandoned, and that it is not profitably engaged in any business. Thus it appears that the Fund is not currently engaged in the business of an investment company.

Section 8(f) of the Act provides, in pertinent part, that whenever the Commission, on its own motion or upon application, finds that a registered investment company has ceased to be an investment company it shall so declare by order and, upon the effectiveness of such order, the registration of such company shall cease to be in effect.

Notice is further given that any interested person may, not later than January 12, 1981, at 5:30 p.m., submit to the Commission in writing a request for a hearing on the matter accompanied by a statement as to the nature of his interest, the reasons for such request, and the issues, if any, of fact or law proposed to be controverted, or he may request that he be notified if the Commission shall order a hearing thereon. Any such communication should be addressed: Secretary, Securities and Exchange Commission, Washington, D.C. 20549. A copy of such request shall be served personally or by mail upon the Fund at the address stated above. Proof of such service (by affidavit or, in the case of an attorney-at-law, by certificate) shall be filed contemporaneously with the request. As provided by Rule 0-5 of the Rules and Regulations promulgated under the Act, an order disposing of this matter will be issued as of course following said date, unless the Commission thereafter orders a hearing upon request or upon the Commission's own motion. Persons who request a hearing, or advice as to whether a hearing is ordered, will receive any notices and orders issued in this matter, including the date of the hearing (if ordered) and any postponements thereof.

For the Commission, by the Division of Investment Management, pursuant to delegated authority.

George A. Fitzsimmons,

Secretary.

[FR Doc. 80-40594 Filed 12-30-80; 8:45 am]

BILLING CODE 8010-01-M

[Release No. 11498; 812-4765]

Mosher, Inc. and Maryland Casualty Co.; Filing of Application for an Order of the Commission Pursuant to Exempting a Proposed Transaction

December 19, 1980.

In the Matter of Mosher, Inc., 2777 Allen Parkway, Houston, Texas 77019, and Maryland Casualty Company, 2727 Allen Parkway, Houston, Texas 77019.

Notice is hereby given that Maryland Casualty Company ("Maryland Casualty"), a Maryland corporation, and a wholly-owned subsidiary of American General Insurance Company, and Mosher, Inc. (the "Fund"), registered under the Investment Company Act of 1940 (the "Act") as a closed-end, diversified management investment

company (collectively the "Applicants"), filed an application on November 10, 1980, and an amendment thereto on December 5, 1980, for an order of the Commission pursuant to Section 17(b) of the Act exempting from the provisions of Section 17(a) of the Act the proposed sale of shares of the common stock of the Fund to Maryland Casualty in exchange for cash or municipal securities having a fair market value equal to the net asset value of the shares of common stock and pursuant to Section 17(d) of the Act and Rule 17d-1 thereunder permitting the participation of the Fund in the proposed sale transaction under the provisions of the stock Purchase Agreement. All interested persons are referred to the application on file with the Commission for a statement of the representations contained therein, which are summarized below.

Applicants state that in 1972 the Fund entered into an agreement with Trinity Industries, Inc. ("Trinity") whereby the Fund would sell substantially all its assets to Trinity for cash and that this transaction was consummated in January, 1973. Applicants further state that the Fund's shareholders approved the sale and adopted a plan of liquidation, but that the Fund later terminated the plan of liquidation and entered into a merger agreement with American General Convertible Securities, Inc. ("AG Convertible"), which is registered under the Act as a closed-end, diversified management investment company. According to the application, the proposed merger of the Fund into AG Convertible was not consummated because on the day before the scheduled closing date of the merger the Fund was served a subpoena from a Federal Grand Jury investing price fixing in the steel fabrication business, the Fund's prior business. Pending completion of this investigation the Fund's possible criminal or civil liability could not be computed. The Fund then registered under the Act on March 4, 1974, as a closed-end, diversified management investment company. The Applicants further state that American General Capital Management, Inc. ("Adviser") acts as investment adviser to the Fund. No officer or director of the Fund or any affiliated person thereof serves as an officer or director of Maryland Casualty or the Adviser or is affiliated person of either of these entities.

The application states that since the sale of its steel fabrication business, the Fund has been deemed a personal holding company under Section 542 of the Internal Revenue Code of 1954, as amended (the "Code"), and as such cannot utilize the benefits afforded regulated investment companies by Subchapter M of the Code. Applicants state that the Fund's status as a personal holding company requires that its shareholders pay federal income tax on all dividends they receive. Applicants further state that since substantially all of the Fund's assets are invested in tax-exempt, municipal debt securities, the dividends paid to its shareholders would be exempt from federal income taxation if the Fund was not considered a personal holding company under the Code.

Applicants state that the management of the Fund has been interested in terminating the Fund's status as a personal holding company, which it believes to be in the best interests of the shareholders, and has explored a number of possible alternatives. Applicants further state that on October 31, 1980, they entered into a Stock Purchase Agreement (the "Agreement") which provides for the sale by the Fund of a number of shares of its common stock equal to 25 percent of the number of the Fund's shares of common stock issued and outstanding immediately prior to the sale for cash or, at the option of Maryland Casualty, municipal securities or a combination of cash or municipal securities. According to the application, the shares of common stock of the Fund will be valued at their net asset value as of the close of business on the last business date preceding the closing date. Applicants further state that any municipal securities exchanged by Maryland Casualty as part of the purchase price of the Fund's common stock will be valued at their fair market value on such date. According to the application any municipal securities contributed by Maryland Casualty will be compatible with the investment objectives of the Fund and compatible with those securities currently in the Fund's portfolio. Applicants represent that as a condition to the contribution of any municipal securities by Maryland Casualty, the Adviser will be required to represent to the Fund that any such municipal securities would have been recommended by it for investment by the Fund at that time, and that the Adviser has no present intention of recommending the sale of any such securities in the immediate future.

According to the application, each of the Applicants will pay any expenses incurred by them as a result of the stock purchase transaction except that the Adviser of the Fund will pay the expenses resulting from the preparation and mailing of proxy materials to the Fund's shareholders who are required to approve the proposed sale and recapitalization of the Fund. The plan of recapitalization of the Fund provides for an increase in the Fund's authorized common stock from 101,990 shares to 5,000,000 shares and for a 15-for-1 stock split. In addition, the proposed plan of recapitalization provides for a change in the par value of the common stock of the Fund from $20 per share to $1 per share. Applicants state that after the sale of the Fund's common stock to Maryland Casualty it is contemplated that 381,000 shares of common stock will be held by Maryland Casualty which will be approximately 20% of the then outstanding shares. Under the terms of the Agreement, the Fund has agreed to indemnify Maryland Casualty for any reduction in the net asset value of the shares of common stock being purchased by it resulting from any amounts paid by the Fund in respect of any judgment against it, or settlement by it of claims against the Fund resulting from a suit filed against the Fund in 1967 relating to its previous steel fabrication business. The Agreement further provides that the Fund cannot convert to open-end status without the consent of Maryland Casualty. Applicants state that they believe this provision is desirable in helping to prevent the Fund from returning to the status of a personal holding company within the meaning of the Code. Applicants further state that under applicable securities laws the shares of common stock to be purchased by Maryland Casualty will not be transferable except in certain limited circumstances. The Agreement also provides that any time commencing six months after the sale of the common stock to Maryland Casualty is effected, while Maryland Casualty owns at least 10 percent of the Fund's outstanding common stock, that the Fund shall register shares of its common stock for sale under the Securities Act of 1933, the Fund will, at its expense, also include any shares of common stock that Maryland Casualty desires to sell in such registration.

Section 17(a) of the Act, in pertinent part, provides that it shall be unlawful for any affiliated person of a registered investment company, or any affiliated person of such a person, acting as principal, knowingly to sell to or to purchase from such registered company any security or other property subject to certain exceptions not relevant here. Section 17(b) of the Act provides that the Commission, upon application, shall exempt a proposed transaction from the provisions of Section 17(a) if evidence establishes that the terms of the

proposed transaction, including the consideration to be paid or received, are reasonable and fair and do not involve overreaching on the part of any person concerned, and that the proposed transaction is consistent with the policy of each registered investment company involved and with the general purposes of the Act. Under Section 2(a)(3) of the Act an investment adviser to an investment company is an affiliated person of such investment company, and anyone owning more than 5% of any person's outstanding voting securities is an affiliated person of such person. Accordingly, since American General Insurance Company owns 100% of the common stock of both the Adviser and Maryland Casualty, Maryland Casualty is an affiliated person of an affiliated person of the Fund, and the proposed sale of the common stock of the Fund to Maryland Casualty falls within the provisions of Section 17(a) of the Act.

Applicants assert that the terms of the proposed sale transaction are fair and reasonable and do not involve overreaching. Applicants state that under the terms of the Agreement Maryland Casualty has the option of purchasing the shares of common stock of the Fund either for cash equal to the net asset value of such shares on the date immediately preceding the date of closing or by contributing securities compatible with the Fund's investment objectives and securities in the Fund's portfolio having an aggregate fair market value equal to the net asset value of the shares of common stock being purchased or a combination of cash and such securities.

Applicants further state that the valuation of any securities contributed by Maryland Casualty will be made on the same basis as the Fund currently follows in the valuation of securities held in its portfolio. As stated previously, Applicants represent that as a condition to the contribution of any municipal securities by Maryland Casualty, the Adviser will be required to represent to the Fund that any such municipal securities would have been recommeded by it for investment by the Fund at that time and that the Adviser has no present intention of recommending the sale of such securities in the immediate future. In addition, each of the Applicants will pay its respective expenses of the transaction except, as stated previously, the Adviser will pay those expenses resulting from the preparation and mailing of proxy materials to the Fund's shareholders who are required to approve the proposed sale and recapitalization of the fund. Finally, Applicants contend that the proposed sale transaction will benefit the shareholders of the Fund by eliminating the Fund's status as a personal holding company under the Code and will benefit Maryland Casualty by providing it with an opportunity to invest a portion of its assets in a larger pool of assets and thereby achieve greater diversity in its investments.

Thus, Applicants contend that the terms of the proposed sale are fair and reasonable and do not involve overreaching on the part of any person concerned, consistent with the Fund's investment policy and consistent with the general purposes of the Act, and therefore request that the Commission enter an order exempting the proposed sale transaction from the provisions of Section 17(a) of the Act.

Rule 17d-1, adopted by the Commission pursuant to Section 17(d) of the Act, provides, in part, that no affiliated person of any registered investment company and no affiliated person of such a person, acting as principal, shall participate in, or effect any transaction in connection with any joint enterprise or other joint arrangement in which such registered company is a participant unless an application regarding such joint enterprise or arrangement had been filed with the Commission and has been granted by an order. A joint enterpirse or other joint arrangement as used in this Rule is any written or oral plan, contract, authorization or arrangement, or any practice or understanding concerning an enterprise or undertaking whereby a registered investment company and any affiliated person of such registered investment company, or affiliated person of such a person, have a joint or a joint and several participation, or share in the profits of such enterprise or undertaking. In passing upon such application, the Commission will consider whether the participation of such registered investment company in such joint enterprise or joint arrangement on the basis proposed is consistent with the provisions, policies and purposes of the Act, and the extent to which such participation is on a basis different from or less advantageous than that of other participants. As noted above, Maryland Casualty is an affiliated person of an affiliated person of the Fund within the meaning of Section 2(a)(3) of the Act. Because the Agreement requires the consent of Maryland Casualty to allow the Fund to convert to open-end investment company status, provides for the indemnification by the Fund of Maryland casualty for liabilities in connection with the lawsuit as discussed previously, and provides for registration rights of Maryland Casualty with respect to the shares of common stock to be purchased by it as described above, the Agreement might be deemed to constitute a joint enterprise or arrangement prohibited by Section 17(d) of the Act and Rule 17d-1 thereunder without Commission approval.

As stated above, the Agreement provides that the fund may not convert to open-end investment company status without the consent of Maryland Casualty. Applicants state the Maryland Casualty requested this condition because, given the distribution of the Fund's shareholders, a conversion by the Fund to open-end investment company status followed by the redemption of shares by a relatively small number of shareholders could result in the five largest individual shareholders of the Fund (utilizing the attribution rules of the Code) owning more than 50% of the outstanding common stock of the Fund, thereby causing it to become a personal holding company within the meaning of the Code to the disadvantage of the remaining shareholders and, thus, negating the purpose of the common stock sale. Applicants also state that the management of the Fund believes that the provision in the Agreement providing for the indemnification of Maryland Casualty with respect to the 1967 suit is appropriate. Applicants state that the Fund believes it will be able to settle the case within the policy limits of the applicable insurance policy then in effect. Finally, with respect to the registration rights afforded Maryland Casualty under the Agreement, the application states that the Fund has no plans to register any of its shares for sale under the Securities Act of 1933, but, if it did so, the management of the Fund believes that the additional expense of including the Fund shares of Maryland Casualty would be negligible.

Thus Applicants represent that the terms of the proposed sale transaction are reasonable and fair to all parties, do not involve overreaching and are consistent with the investment objectives of the Fund and with the policies of the Act. As noted above, Applicants contend that the proposed sale will benefit the shareholders of the Fund by eliminating the Fund's status as a personal holding company under the Code, and will benefit Maryland Casualty by providing it with an opportunity to invest a portion of its assets in a larger pool of assets and thereby achieve greater diversity in its investments.

Accordingly, the Applicants request an order of the Commission, pursuant to Section 17(d) of the Act and Rule 17d-1 thereunder, permitting the participation of the Fund in the proposed sale transaction under the provisions of the Agreement.

Notice is further given that any interested person may, not later than January 12, 1981, at 5:30 p.m., submit to the Commission in writing a request for a hearing on the application accompanied by a statement as to the nature of his interest, the reasons for such request, and the issues, if any, of fact or law proposed to be controverted, or he may request that he be notified if the Commission shall order a hearing thereon. Any such communication should be addressed: Secretary, Securities and Exchange Commission, Washington, D.C. 20549. A copy of such request shall be served personally or by mail upon Applicants at the addresses stated above. Proof of such service (by affidavit or, in the case of an attorney-at-law, by certificate) shall be filed contemporaneously with the request. As provided by Rule 0-5 of the Rules and Regulations promulgated under the Act, an order disposing of the application herein will be issued as of course following said date unless the Commission thereafter orders a hearing upon request or upon the Commission's own motion. Persons who request a hearing, or advice as to whether a hearing is ordered, will receive any notices and orders issued in this matter, including the date of the hearing (if ordered) and any postponements thereof.

For the Commission, by the Division of Investment Management, pursuant to delegated authority.

George A. Fitzsimmons,

Secretary.

[FR Doc. 80-40589 Filed 12-30-80; 8:45 am]

BILLING CODE 8010-01-M

[Release No. 11505; 812-4713]

Narragansett Capital Corp., et al.; Filing of Application for an Order Exempting a Proposed Transaction

December 19, 1980.

In the matter of Narragansett Capital Corporation, 40 Westminster Street, Providence, Rhode Island 02903; Photo Systems, Inc., 7200 W. Huron River Drive, Dexter, Michigan 48103; Lyndon Color Labs, Inc., 7200 W. Huron River Drive, Dexter, Michigan 48103; Robert E. Thornburg, Jr., 1004 Greenhills, Ann Arbor, Michigan 48105; William P. Considine, Whispering Pines, Narragansett, Rhode Island 02882.

Notice is hereby given that Narragansett Capital Corporation ("Narragansett"), registered under the Investment Company Act of 1940 ("Act") as a closed-end, non-diversified, management investment company and licensed as a small business investment company under the Small Business Investment Act of 1958, Photo Systems, Inc. ("Photo Systems"), a company controlled by Narragansett, Lyndon Color Labs, Inc. ("Lyndon, Inc."), a newly organized company currently controlled by an affiliate of an affiliate of Narragansett, Robert E. Thornburg, Jr. ("Thornburg"), an officer and director of Photo Systems, and William P. Considine ("Considine"), Chairman and President of Photo Systems, (hereinafter Narragansett, Photo Systems, Lyndon Inc., Thornburg and Considine are collectively referred to as "Applicants") filed an application on August 11, 1980, and amendments thereto on November 14, 1980, and December 5, 1980, for an order of the Commission pursuant to Section 17(b) of the Act exempting the proposed sale of a division of Photo Systems to Lyndon, Inc., from the provisions of Section 17(a) of the Act and pursuant to Section 17(d) of the Act and Rule 17d-1 thereunder, permitting certain proposed transactions which are to be made in connection with the restructuring and refinancing of Narragansett's investment in Photo Systems. All intested persons are referred to the application on file with the Commission for a statement of the representations contained therein, which are summarized below.

Applicants propose to sell Lyndon Color Labs Division ("Lyndon Division"), a division of Photo Systems, to Lyndon, Inc., a company created for the purpose of purchasing Lyndon Division. As stated in the application, Photo Systems is a Michigan corporation with an authorized capital stock of 600,000 shares, $.10 par value, of which 460,000 shares are issued and outstanding, and none of which are publicly traded. Applicants state that Narragansett holds 230,000 shares, or 50 percent of the outstanding capital stock and, therefore, may be presumed to control Photo Systems. The remaining 230,000 shares outstanding are divided among six shareholders, all of whom are or were employed by Photo Systems or are married to such a person. According to the application, Photo Systems currently has four directors, including two (Considine and Harvey J. Sarles) who are also directors of Narragansett, and one (Thornburg) who controls Lyndon, Inc.

Applicants state that Narragansett is a Rhode Island corporation with an authorized capital stock of 2,000,000 shares of common stock, $1.00 par value, of which 1,129,867 shares were issued and outstanding as of December 31, 1979. Applicants further state that Narragansett's shares are publicly traded in the over-the-counter market and held by approximately 1,500 shareholders. In addition to the equity investment in Photo Systems, Narragansett also holds a promissory note of Photo Systems with an outstanding principal amount of $1,705,000 as of June 30, 1980, which is subordinated to Photo Systems's indebtedness to Industrial National Bank of Rhode Island ("IN Bank") pursuant to a term loan having an outstanding principal balance of $170,000 as of April 30, 1980.

As stated in the application, Narragansett's investment in Photo Systems has undergone substantial changes as Photo Systems has sought to get on a solid business and financial footing. During the seven years since the organization of Photo Systems, Narragansett's investment has been restructured and refinanced on several occasions and two of Photo Systems's divisions, the C-K Division and the DNJ Division, were sold; the C-K Division to Sound Color Corporation, a company deemed to be controlled by Narragansett (See Investment Company Act Release No. 10240 May 12, 1978), and the DNJ Division to an unrelated third party. Applicants represent that the purchase price for the disposition of both divisions was negotiated between the parties based upon a formula conceived by Considine as a basis for determining his asking price for the divisions, namely five times the after-tax earnings of the division in the prior fiscal year plus the book value of the division at the time of the sale.

Photo Systems currently has two remaining divisions: the Lyndon Division, which operates a laboratory for processing color film for professional photographers; and the Unicolor Division, which manufacturers and distributes darkroom equipment and photographic supplies. Applicants state that the Lyndon Division has been, since the reorganization of Photo Systems in 1975, under the operational control of Thornburg, who serves as the chief executive of the division. Applicants further state that Thornburg has for several years expressed his interest in acquiring the Lyndon Division from Photo Systems and his dissatisfaction with the current arrangement, since he does not directly share in the success of

the Lydon operations. Accordingly, for those and other reasons outlined below, Applicants state that Photo Systems has agreed to sell the Lyndon Division to Lyndon, Inc., a company in which Thornburg will have a substantial interest.

The application states that Lyndon, Inc., is a Rhode Island corporation organized on May 16, 1980, with authorized capital stock consisting of 4,000 shares of Class A Common Stock, $1.00 par value ("Class A Common"), and 4,000 shares of Class B Non-Voting Common Stock, $1.00 par value. Applicants state that Thornburg has subscribed for and purchased 170 shares of Class A Common for a purchase price of $17,000 and that under the terms of an investment agreement, dated May 27, 1980, between Narragansett and Lyndon, Inc. ("Investment Agreement"), Narragansett will purchase 170 shares of Class A Common for $17,000. Under the terms of the Investment Agreement, Narragansett also will lend Lyndon, Inc., up to $916,000; $816,000 to be provided at the time of the closing of the purchase of the Lyndon Division and the remaining $100,000 to be available to Lyndon, Inc., for working capital at any time during the three-year period following the purchase of the Lyndon Division ("Commitment Period"). Thus, according to the application, Narragansett will have made an aggregate investment in Lyndon, Inc., of between $833,000 and $933,000, all but $17,000 of which will be in the form of unsubordinated indebtedness.

As indicated by Applicants, the indebtedness of Lyndon, Inc., to Narragansett will be represented by a promissory note ("Note") which will bear an interest rate of 15 percent per annum and will be payable as to principal over a ten-year period based upon the earnings and anticipated cash flow of Lyndon, Inc. In addition, the Investment Agreement provides that, during the Commitment Period, Narragansett is entitled to a fee equal to one percent of the unused portion of the loan commitment. Pursuant to the Investment Agreement, which Applicants represent is in substantially the same form as that utilized by Narragansett for virtually all its portfolio investments over the past few years, Narragansett will receive certain registration rights covering the shares of Lydon, Inc., held by Narragansett and the operations of Lyndon, Inc., will be subject to certain affirmative and negative covenants designed to protect Narragansett. In addition, the Investment Agreement grants Narragansett an irrevocable option for a period of 10 years after payment in full of the Note to sell to Lyndon, Inc., all of Narragansett's equity interest in Lyndon, Inc., at a price based on a formula similar to the formula used to determine the purchase price of Lyndon Division.

Applicants represent that Narragansett and Thornburg, as sharehoders of Lyndon, Inc., will enter into an agreement ("Shareholders Agreement") providing, among other things, for restrictions on the transferability of their stock of Lyndon, Inc.; for a board of directors of four persons, of which two would be designated by Narragansett, except that in the event of a default on the Note, Narragansett would have the right to designated a majority of the directors; and for Thornburg to sell, as soon as reasonably practicable, no less than 68 shares of Class A Common to two management employees of Lyndon, Inc., selected by Thornburg and approved by the board of directors, for consideration not to exceed $10,000.

As proposed in the application, Lyndon, Inc., will purchase (pursuant to the terms of the Asset Purchase Agreement dated May 27, 1980, between Lyndon, Inc., and Photo Systems) the assets and business of the Lyndon Division of Photo Systems and assume its liabilities for a net purchase price of $925,000. As set forth in the Asset Purchase Agreement, the purchase price is payable by $850,000 in cash at or before the closing and the $75,000 balance by promissory note to Photo Systems, payable in three annual installments of $25,000 each with an interest rate of 12.5 percent per annum, payable quarterly. Applicants state that included in the assets to be purchased is $100,000 in cash, plus all additional cash collected by Lyndon Division subject to certain adjustments described below.

As stated in the application, the closing of the purchase of the Lyndon Division was scheduled for September 30, 1980. However, the Asset Purchase Agreement provides that the closing date shall be extended to a date, set by the parties, within two weeks following the issuance of an order with respect to the application, but no later than December 31, 1980. The Asset Purchase Agreement sets the effective date for all transactions covered by that agreement at the close of business on April 30, 1980. Applicants state that the effective date of April 30, 1980, was chosen for a variety of reasons, including: (1) That when the parties agreed to the transaction in late February, 1980, they felt that an April 30 date would provide adequate time for finalization of the acquisition agreements; (2) that the parties felt it was important to fix a date after which Mr. Thornburg could be assured that his efforts would be for the benefit of the new concern; and (3) that April 30 is a date which has traditionally been a transitional or slack time in the photo pocessing business and was a good time for the utilization of personnel to effect the transition. Accordingly, Applicants state that the business of the Lyndon Division will be operated for the account of Lyndon, Inc., until the date of actual closing and, therefore, Lyndon, Inc., will be obligated to pay Photo Systems interest on the $75,000 note from May 1, 1980, and that Photo Systems will be entitled to withhold from the cash being transferred to Lyndon, Inc., the following amounts: (1) $291.11 per day for each day after the effective date through the closing date; (2) the amount of actual out-of-pocket expenditures made for Lyndon Division by Photo Systems from its own funds after the effective date; and (3) all ordinary operating expenses of Lyndon Division customarily paid by Photo Systems from its own funds, whether or not paid by closing date. The Asset Purchase Agreement also provides that Photo Systems will sublease to Lyndon, Inc., a portion of the Photo Systems premises currently occupied by the Lyndon Division. Applicants represent that it is anticipated that Lyndon, Inc., will pay a pro rata share of the cost based upon the percentage of space utilized.

Applicants represent that Photo Systems will utilize the cash proceeds from the sale of the Lyndon Division to prepay $750,000 of the principal amount of its indebtedness to Narragansett ($1,705,000 as of June 30, 1980) and utilize the remaining $100,000 for working capital purposes. Applicants submit that as a result, Narragansett's aggregate investment in Photo Systems will be reduced from $1,935,000 to $1,185,000. In addition, Applicants represent that Photo Systems will refinance its outstanding indebtedness to IN Bank, replacing its current principal amount due of $170,000 with a $600,000 revolving line of credit arrangement, which will carry the same rate of interest (prime plus 1½ percent). Applicants further represent that Narragansett will agree that Photo Systems's promissory note will be subordinated with respect to only $170,000 of the refinanced indebtedness to IN Bank in the event of default or liquidation, so that while Photo Systems's indebtedness to IN Bank may increase, the indebtedness held by

Narragansett will continue to be subordinated to only $170,000.

According to the application, Considine currently divides his time between the two divisions operated by Photo Systems. Applicants state that it is anticipated that he will continue to do so, even after the assets and business of the Lyndon Division are sold, and thus, Applicants have agreed that Considine will continue to be compensated at his current rate of $45,000 per annum, of which $25,000 will be paid by Photo Systems and $20,000 will be paid by Lyndon, Inc. Applicants represent that this arrangement reflects the allocation of corporate charges made by Photo Systems to its two divisions with respect to Considine's compensation for the fiscal year ended June 30, 1980.

Section 2(a)(3) of the Act, in pertinent part, defines an affiliated person to include (a) any person directly or indirectly owning, controlling, or holding with power to vote, 5 per centum or more of the outstanding voting securities of such other person; (b) any person 5 per centum or more of whose outstanding securities are directly or indirectly owned, controlled, or held with power to vote, by such other person; (c) any person directly or indirectly controlling, controlled by, or under common control with, such other person; and (d) any officer, director or employee of such other person. Section 2(a)(9) of the Act provides, in part, that any person who owns beneficially more than 25 per centum of the voting securities of a company shall be presummed to control such company. Accordingly, Applicants acknowledge that Narragansett will be an affiliated person of both Photo Systems and Lyndon, Inc., and vice versa, and Photo Systems and Lyndon, Inc., are each affiliates of the other. Applicants also acknowledge that both Mr. Sarles and Mr. Considine are affiliated persons of Lyndon, Inc. Finally, Applicants state that Mr. Thornburg is an affiliated person of Photo Systems and Lyndon, Inc., and is an affiliate of an affiliate of Narragansett.

Section 17(a) of the Act provides, in pertinent part, that it is unlawful for any affiliated person of a registered investment company or any affiliated person of such person, acting as principal, knowingly to purchase from or sell to such registered company or any company controlled by such registered company, any security or other property except securities of which the seller is the issuer. Section 17(b) of the Act provides generally that, upon application, the Commission shall exempt a proposed transaction from the provisions of Section 17(a) of the Act if evidence establishes that the terms of the proposed transaction, including the consideration to be paid or received, are reasonable and fair and do not involve overreaching on the part of any person concerned and that the proposed transaction is consistent with the policy of the registered investment company concerned and with the general purposes of the Act. Applicants request an order pursuant to Section 17(b) of the Act, exempting the proposed sale of the Lyndon Division to Lyndon, Inc., from the provisions of Section 17(a) of the Act.

Section 17(d) of the Act and Rule 17d-1 thereunder, taken together, provide, in part, that it is unlawful for an affiliated person of a registered investment company, or an affiliated person of such person, acting as principal, to effect any transaction in which such investment company, or a company controlled by such investment company, is a joint participant, without the permission of the Commission. Rule 17d-1 provides, in part, that in passing upon applications for orders granting such permission, the Commission will consider (i) whether the participation of the investment company or the controlled company in such transaction on the basis proposed is consistent with the provisions, policies and purposes of the Act, and (ii) the extent to which such participation is on a basis different from or less advantageous than that or other participants.

Applicants state that the proposed transactions may be said to involve a joint arrangement, and that the proposed transactions could be deemed to be prohibited under Rule 17d-1 unless the Commission issues an order permitting the transaction. Accordingly, Applicants request an order of the Commission, pursuant to Section 17(d) of the Act and Rule 17d-1 thereunder, permitting the proposed joint transactions in connection with the sale of the Lyndon Division to Lyndon, Inc.

Applicants submit that the separation of the Lyndon Division from Photo Systems furthers Narragansett's long-term objective of reorganizing Photo Systems in a way that will maximize managerial ability and incentives and minimize administrative costs and organizational risks and would produce a number of benefits. Applicants assert, that the experience of the managements of Photo Systems and Narragansett has shown that photographic processing laboratories, such as that by the Lyndon Division, are most appropriately managed and operated independent of other business activities; are successful in large measure because of the personal relationships and reputation developed by the on-premise management in its relationships with it principal customers; and tend to achieve greatest financial success where the on-premise management has direct incentives for achieving that success. Accordingly, Applicants submit that the sale of the Lyndon Division will result in Thornburg's obtaining an equity interest in a business he has been operating with increasing success over the past few years, thereby increasing his incentive for further success. Applicants argue that this enhance incentive will benefit Narragansett, which will hold a 50 percent ownership interest in Lyndon, Inc.

Moreover, Applicants assert that the terms of the proposed sale of the Lyndon Division are fair and reasonable and do not involve overreaching on the part of any party. Applicants state that the price to be received by Photo Systems for the Lyndon Division ($925,000) was and is a fair and reasonable price in light of the circumstances existing at the time the agreement was made, which included the trend toward a substantial increase in the operating income of the Lyndon Division for the fiscal year ended June 30, 1980. Applicants further assert that the purchase price was negotiated on an arms-length basis among Thornburg, Considine and the shareholder-managers of Photo Systems based upon the formula which was the basis for the prior sales of two other divisions (five times after-tax divisional earnings plus divisional book value at the time of sale). Applicants state that the formula pricing method, if earnings for fiscal year ended June 30, 1979, are used, yields a formula price of $831,500 (which is 9 percent less than the actual price agreed upon) while such formula, if earnings for the fiscal year ended June 30, 1980, are used, would yield a formula price of $1,121,500. Applicants acknowledge that the use of the 1980 earnings figures in calculating the formula price results in a price approximately 20 percent above the actual price. However, Applicants submit that the actual price of $925,000 agreed upon by the parties is a reasonable and fair price for several reasons: (1) The 1980 fiscal year was not complete at the time the parties reached agreement on the price and entered into the Asset Purchase Agreement; (2) Applicants do not feel that the substantial increase in the Lyndon Division's operating earnings in 1980 adversely impacts upon the fairness of the price, which was negotiated prior to the end of the fiscal year, but with an

awareness of the posibility of such an increase; and (3) the actual price is within 6 percent of the average of the formula prices using 1979 and 1980 operating earnings. In addition, Applicants state that the sale provides an opportunity for the shareholders of Photo Systems to dispose of a business which, while currently profitable, has been a source of financial problems in the past and in which none of the shareholder-managers have a managerial interest. By disposing of Lyndon Division at this time, Applicants submit that Photo Systems will benefit in that: (a) the sale will produce a gain to Photo Systems of $370,000, representing the excess of the purchase price over book value; (b) the sale will produce cash proceeds in the amount of $850,000, $750,000 of which will be used to prepay its indebtedness to Narragansett (which bears interest at the rate of 12 percent), and which will improve sheet and enhance its future earnings potential; and (c) after the sale Photo Systems will be engaged in only one line of business, which will ease the administrative burden on its management and simplify the prospects and increase the incentives for improving both the profitability and efficiency of its remaining operation.

Applicants further assert that the proposed sale of the Lyndon Division is fair and reasonable to Narragansett. Applicants submit that Narragansett will improve its investment in Photo Systems because its net investment in Photo Systems will be reduced by $750,000, but the book value of its equity investment will be increased by $185,000 (before taxes). Furthermore, Applicants state that Narragansett will be in a better position to reduce its involvement in the day-to-day management of Photo Systems, helping Narragansett to meet Small Business Administration regulations which require Narragansett to relinquish operational control of Photo Systems at a future date.

Applicants represent that the terms of the purchase of the Lyndon Division by Lyndon, Inc., are also fair and reasonable to Lyndon, Inc. Applicants again point to the fact that the price was derived from substantially the same formula used for the sales of similar businesses. Applicants also stress that based upon projections prepared by Thornburg (which Narragansett's management believes reasonable), Lyndon, Inc., will be able to service the indebtedness incurred to finance the purchase while still providing a fair return to shareholders on their equity investment.

Applicants assert that the terms of Narragansett's investment in Lyndon, Inc., are fair and reasonable; the terms of the proposed investment are substantially similar to those of other investments by Narragansett in the recent past, and Narragansett will retain its current equity position in the Lyndon businesses. In addition, Applicants submit that while Narragansett's aggregate debt investment in the Lyndon and Unicolor Division's businesses will increase from $1,705,000 to between $1,771,000 and $1,871,000, the rate of interest on at least $816,000 (and perhaps as much as $916,000) of the aggregate debt will be increased from 12 percent to 15 percent per annum. Applicants also assert that the arrangements regarding Considine's employment are fair to all parties concerned because Considine will continue to perform the same services for the same salary, the only difference being that the Lyndon Division will be operated as a separately incorporated business.

Applicants assert that the proposed transactions are consistent with the policies of Narragansett. As stated in the application, Narragansett's board of directors has determined that the proposed transactions are in the best interests of its shareholders and that the proposed transactions would place Narragansett closer to its goal of relinguishing control of Photo Systems on or before June 30, 1982. Applicants also assert that the proposed transactions are consistent with the general purposes of the Act, in that they are in the interests of the shareholders of the participating companies and do not offer special beneifts to directors, officers or other affiliated persons. Finally, Applicants assert that the participation of each of the participants in the joint enterprise or arrangment is not on a basis less advantageous than that of other participants. Applicants state, in support of such assertion, that, among other facts, Narragansett and Thornburg will pay the same price for Lyndon, Inc., shares; Narragansett will retain its 50 percent interest in the Lyndon businesses; no special fees or compensation will be paid to any of the officers, directors or shareholders of Photo Systems in connection with the sale; and Considine and Thornburg will continue to provide the same management services at the same level of compensation.

Notice is further given that any interested person may, not later than January 13, 1981, at 5:30 p.m., submit to the Commission in writing a request for a hearing on the matter accompanied by a statement as to the nature of his interest, the reason for such request, and the issues, if any, of fact or law proposed to be controverted, or he may request that he be notified if the Commission shall order a hearing thereon. Any such communication should be addressed: Secretary, Securities and Exchange Commission, Washington, D.C. 20549. A copy of such request shall be served personally or by mail upon Applicants at the addresses stated above. Proof of such service (by affidavit or, in the case of an attorney-at-law, by certificate) shall be filed contemporaneously with the request. As provided by Rule 0-5 of the Rules and Regulations promulgated under the Act, an order disposing of the application will be issued as of course following said date unless the Commission thereafter orders a hearing upon request or upon the Commission's own motion. Persons who request a hearing, or advice as to whether a hearing is ordered, will receive any notices and orders issued in this matter, including the date of the hearing (if ordered) and any postponements thereof.

For the Commission, by the Division of Investment Management, pursuant to delegated authority.

George A. Fitzsimmons,

Secretary.

[FR Doc. 80-40591 Filed 12-30-80; 8:45 am]

BILLING CODE 8010-01-M

[Release No. 17396; SR-NASD-80-17]

National Association of Securities Dealers, Inc.; Order Approving Proposed Rule Change

December 2, 1980.

On September 30, 1980, the National Association of Securities Dealers, Inc., 1735 K Street, N.W., Washington, D.C. 20006 (the "NASD" of the "Association") filed with the Commission, pursuant to Section 19(b)(1) of the Securities Exchange Act of 1934, 15 U.S.C. 78s(b)(1) (the "Act") and Rule 19b-4 thereunder, copies of proposed rule change to amend Section C.4 of Part I of Schedule D of the Association's By-Laws to permit a market maker's initial registration in a security not previously authorized to become effective immediately. The proposed rule change would permit immediate registration of market makers during the initial week of a security's quotations on the National Association of Securities Dealers Automated Quotation System ("NASDAQ"), if the request for registration is received by the NASD within five (5) business days of authorization of the security.

Notice of the proposed rule change together with the terms of substance of the proposed rule change was given by publication of a Commission Release (Securities Exchange Act Release No. 17217 (October 14, 1980)) and by publication in the Federal Register (45 FR 69325 (1980)). Although public comments were solicited, none were received.

The Commission finds that the proposed rule change is consistent with the requirements of the Act and the rules and reguations thereunder applicable to national securities associations, and in particular, the requirements of Sections 11A and 15A and the rules and regulations thereunder.

It is therefore, ordered, pursuant to Section 19(b)(2) of the Act, that the above-mentioned proposed rule change be, and it hereby is, approved.

For the Commission, by the Division of Market Regulation pursuant to delegated authority.

George A. Fitzsimmons,

Secretary.

[FR Doc. 80-40593 Filed 12-30-80; 8:45 am]

BILLING CODE 8010-01-M

[Release No. 11504; 811-3035]

NEL Cash Management Account II, Inc.; Filing of Application

December 19, 1980.

Notice is hereby given that NEL Cash Management Account II, Inc., 501 Boylston Street, Boston, Massachusetts 02117, ("Applicant"), an open-end, diversified, management investment company registered under the Investment Company Act of 1940 ("Act"), filed an application on November 24, 1980, for an order of the Commission pursuant to Section 8(f) of the Act, and Rule 8f-1 thereunder, declaring that Applicant has ceased to be an investment company. All interested persons are referred to the application on file with the Commission for a statement of the representations contained therein, which are summarized below.

Applicant, a corporation organized under the laws of the Commonwealth of Massachusetts, registered under the Act on March 31, 1980, and filed a registration statement on Form N-1 under the Securities Act of 1933 ("1933 Act") for the public offer and sale of shares of its common stock on the same date. Applicant's 1933 Act registration statement was declared effective by the Commission on April 28, 1980, and an initial public offering of its securities commenced on April 29, 1980.

According to the application, the Boards of Directors of the Applicant and NEL Cash Management Account I, Inc. ("Account I"), a money market fund registered under the Act unanimously voted for the merger of the Applicant into Account I on July 23, 1980. Applicant states that the action of the Boards of Directors of Applicant and Account I specifically followed the procedures set forth in Rule 6c-5(T) under the Act. Applicant further states that all its portfolio securities were acquired by Account I and that no assets of Applicant were disposed of in connection with the merger. According to the application, all expenses incurred by the Applicant as a result of the merger were paid by the Applicant's investment adviser, New England Mutual Life Insurance Company.

Applicant states that it currently has no assets or outstanding liabilities, has no securityholders and is not a party to any pending litigation or administrative proceeding. Applicant further represents that it is not engaged, and does not propose to engage, in any business activities other than those necessary for the winding up of its affairs and that on July 31, 1980, it filed Articles of Merger with the secretary of State of the Commonwealth of Massachusetts. Finally, Applicant represents that within the last eighteen months it has not transferred any of its assets to a separate trust, the beneficiaries of which were or are securityholders of Applicant.

Section 8(f) of the Act provides, in part, that when the Commission upon application finds that a registered investment company has ceased to be an investment company, it shall so declare by order and, upon the taking effect of such order, the registration of such company shall cease to be in effect.

Notice is further given that any interested person may, not later than January 13, 1981, at 5:30 p.m., submit to the Commission in writing, a request for a hearing on the application accompanied by a statement as to the nature of his or her interest, the reasons for such request, and the issues, if any, of fact or law proposed to be controverted; or he or she may request that he or she be notified if the Commission shall order a hearing thereon. Any such communication should be addressed: Secretary, Securities and Exchange Commission, Washington, D.C. 20549. A copy of such request shall be served personally or by mail upon Applicant at the address stated above. Proof of such service (by affidavit or, in the case of an attorney-at-law, by certificate) shall be filed contemporaneously with the request. As provided by Rule 0-5 of the Rules and Regulations promulgated under the Act, an order disposing of the application herein will be issued as of course following said date unless the Commission thereafter orders a hearing upon request or upon the Commission's own motion. Persons who request a hearing, or advice as to whether a hearing is ordered, will receive any notices and orders issued in this matter, including the date of the hearing (if ordered) and any postponements thereof.

For the Commission, by the Division of Investment Management, pursuant to delegated authority.

George A. Fitzsimmons,

Secretary.

[FR Doc. 80-40592 Filed 12-30-80; 8:45 am]

BILLING CODE 8010-01-M

[Release No. 21847; 70-6322]

Ohio Power Company; Proposed Acquisition of Assets Related to Rail-Car Maintenance

December 19, 1980.

Notice is hereby given that Ohio Power Company ("Ohio Power"), 301 Cleveland Avenue, S.W., Canton, Ohio 44702, an electric utility subsidiary of American Electric Power Company, Inc. ("AEP"), a registered holding company, has filed with this Commission a post-effective amendment to the application in this proceeding pursuant to Sections 9(a) and 10 of the Public Utility Holding Company Act of 1935 ("Act") regarding the following proposed transaction. All interested persons are referred to the amended application, which is summarized below, for a complete statement of the proposed transaction.

By order in this proceeding dated August 3, 1979 (HCAR No. 21173), Ohio Power was authorized to acquire for approximately $510,000 certain assets related to the repair of railroad cars, consisting of rail tracks, switches, buildings, and other rail-related inventory, from Sewco, Inc., a maintenance company. Ohio Power was also authorized to make additional expenditures for equipment and accessories related to rail-car maintenance and repair in an amount not to exceed $375,000 through December 31, 1979.

The rail-repair assets were to be used to maintain 1,765 or more railroad hopper cars which transport coal from the western United States to Ohio Power's Cook Coal Terminal ("Cook"), a rail-to-river coal transfer facility located near Metropolis, Illinois. These cars are part of the AEP system operating

companies' fleet of rail hopper cars which have been acquired through lease.

The post-effective amendment states that due to the fact that Sewco, Inc.'s assets were not purchased until November 14, 1979, none of the $375,000 for additional expenditures was expended in 1979. Ohio Power now contemplates that the expenditures related to equipment and accessories during the period from January 1, 1980, through June 30, 1981, will be in an amount not exceeding $586,000. Authorization is therefore requested for the expenditure of up to a total of $586,000 to acquire equipment and accessories related to rail-car maintenance from time to time through June 30, 1981.

It is stated that no state or federal commission, other than this Commission, has jurisdiction over the proposed transaction.

Notice is further given that any interested person may, not later than January 15, 1981, request in writing that a hearing be held on such matter, stating the nature of his interest, the reasons for such request, and the issues of fact or law raised by said post-effective amendment to the application which he desires to controvert; or he may request that he be notified should the Commission order a hearing thereon. Any such request should be addressed: Secretary, Securities and Exchange Commission, Washington, D.C. 20549. A copy of such request should be served personally or by mail upon the applicant at the above-stated address, and proof of service (by affidavit or, in case of an attorney at law, by certificate) should be filed with the request. At any time after said date, the application, as now amended or as it may be further amended, may be granted as provided in Rule 23 of the General Rules and Regulations promulgated under the Act, or the Commission may grant exemption from such rules as provided in Rules 20(a) and 100 thereof or take such other action as it may deem appropriate. Persons who request a hearing or advice as to whether a hearing is ordered will receive any notices or orders issued in this matter, including the date of the hearing (if ordered) and any postponements thereof.

For the Commission, by the Division of Corporate Regulation, pursuant to delegated authority.

George A. Fitzsimmons,

Secretary.

[FR Doc. 80-40587 Filed 12-30-80; 8:45 am]

BILLING CODE 8010-01-M

SMALL BUSINESS ADMINISTRATION

[License No. 09/09—0271]

Merrill, Pickard I

On November 3, 1980, a notice was published in the Federal Register (45 FR 72854) stating that Small Business Enterprise Associates whose name was subsequently changed to Merrill, Pickard I, 555 California Street, Suite 2170, San Francisco, California 94104, had filed an application with the Small Business Administration (SBA), pursuant to § 107.102 of the Regulations governing small business investment companies (13 CFR 107.102(1980)) for a license to operate as a small business investment company under the provisions of the Small Business Investment Act of 1958, as amended (the Act).

(15 U.S.C. 661 et. seq.)

Interested persons were given 15 days to submit written comments on the application to the SBA.

Notice is hereby given that no written comments were received and, having considered the application and all other pertinent information, the Small Business Administration approved the issuance of License No. 09/09-0271, on November 26, 1980, to Merrill, Pickard I, pursuant to Section 301(c) of the Act.

(Catalogue of Federal Domestic Assistance Programs. No. 59.011, Small Business Investment Companies)

Dated: December 17, 1980.

Michael K. Casey,

Associate Administrator for Investment.

[FR Doc. 80-40581 Filed 12-30-80; 8:45 am]

BILLING CODE 8025-01-M

OFFICE OF THE UNITED STATES TRADE REPRESENTATIVE

Determination Regarding Acceptance and Application of the Agreement on Government Procurement

1. Pursuant to section 102 of the Trade Act of 1974 (19 U.S.C. 2112(b)), the President, through his duly empowered representative, on April 12, 1979, entered into the Agreement on Government Procurement negotiated in the Tokyo Round of Multilateral Trade Negotiations.

2. In accordance with sections 102 and 151 of the Trade Act of 1974 (19 U.S.C. 2112 and 2191), the Agreement on Government Procurement was submitted to Congress for its approval. Section 2 of the Trade Agreements Act of 1979 ("the Act") (93 Stat. 147, 19 U.S.C. 2503) approves the Agreement on Government Procurement and authorizes the President to accept the Agreement on Government Procurement provided that the President determines that all, or all but one, of the major industrial countries (as defined in section 126(d)) is also accepting the agreement.

3. The Memorandum of the President of December 14, 1979, "Determination Regarding Multilateral Trade Negotiations", authorized the United States Trade Representative or his designee, pursuant to the provisions of section 2 of the Act of 1979 (93 Stat. 147, 19 U.S.C. 2503) and section 301 of title 3 of the United States Code, to sign the Agreement on Government Procurement on behalf of the United States of America, subject to satisfactory completion of negotiations on entity coverage under the Agreement. Section 1-103(b) of Executive Order 12188 delegates the functions of the President under section 2(b) of the Act to the United States Trade Representative, who shall exercise such authority with the advice of the Trade Policy Committee.

Now, therefore, I, Robert D. Hormats, Acting United States Trade Representative, acting in conformity with the provisions of section 2 of the Act (93 Stat. 147, 19 U.S.C. 2503) and section 301 to title 3 of the United States Code, and Executive Code 12188, hereby determine that, with respect to the Agreement on Government Procurement,

1. in accordance with section 2(b) (1) and (3) of the Act (19 U.S.C. 2503(b) (1) and (3)) each major industrial country (as defined in section 126(d) of the Trade Act of 1974 (19 U.S.C. 2136(d)) is also accepting this agreement; and

2. negotiations with the major industrial countries concerning entity coverage under the Agreement have been satisfactorily completed, and, as to the major industrial countries, the conditions under section 2(b) of the Act (19 U.S.C. 2503(b)) on acceptance of the Agreement on Government Procurement have been fulfilled.

December 23, 1980.

Robert D. Hormats,

Acting United States Trade Representative.

[FR Doc. 80-40553 Filed 12-30-80; 8:45 am]

BILLING CODE 3190-01-M

VETERANS ADMINISTRATION

Procedures for Adjudication of Ionizing Radiation Claims

AGENCY: Veterans Administration.

ACTION: Revision of program guide.

SUMMARY: The Veterans Administration has revised a program guide for use by various regional offices in the

development and disposition of claims of veterans alleging exposure to ionizing radiation during service while participating in atmospheric testing of nuclear weapons. This guide provides background information concerning the atmospheric nuclear test program and potential health effects for veterans who participated. It is not directive.

FOR FUTHER INFORMATION CONTACT: Robert C. Macomber (202-389-2635).

SUPPLEMENTARY INFORMATION: A recent study by the Center for Disease Control, reported in the Journal of the American Medical Association issue of October 3, 1980, reported preliminary findings of the military maneuvers during the 1957 nuclear test explosion "Smoky". Because the contents of this article have a bearing upon the adjudication of claims for disabilities resulting from ionizing radiation, we have amended the program guide by making reference to it, and again give this notice as a matter of public interest.

Program guides are nondirective and non-rule or policy making. They are superseded by instructions, technical bulletins or other non-rule making issues which may be at variance on the same subject matter.

Approved: December 22, 1980.

By direction of the Administrator.

Rufus H. Wilson,

Deputy Administrator.

Rating Practices and Procedures—Disability Ionizing Radiation Exposure

1. *Claims Alleging Disabilities Attributed to Exposure to Ionizing Radiation.* From some time, claims have been received in which it is alleged that disabilities have resulted from veterans' exposure to ionizing radiation during service through their participation in atmospheric testing of nuclear devices.

Some 200,000 U.S. military personnel participated in the atmospheric testing of nuclear weapons in Nevada and the South Pacific between 1945 and 1962. Since the Limited Test Ban Treaty of 1963, all U.S. tests have been underground.

This testing and the resultant health hazard were discussed in a recent comprehensive study of the health effects of ionizing radiation by representatives of several executive agencies, including the VA, HEW, DoD, DoE, DoL, EPA, and NRC. The findings are contained in the "Report of the Interagency Task Force on the Health Effects of Ionizing Radiation," June 1979. The Interagency Task Force (hereafter referred to as "ITF") reported that an estimated 43% of the test participants received no exposure to ionizing radiation as a result of their participation; 87% received less than 1 rem of external radiation; 97% less than 3 rem; and over 99% less than 5 rem. It should be pointed out that these estimates are based upon external film badge readings of participants.

Although film badge readings are available for a large number of participants, not every participant was badged. In some cases, for units in which individuals operated in close proximity to each other (e.g., a ship's crew, and infantry squad), a representative sample of the unit was badged. In general, this was done for units which were not expected to be exposed to significant radiation. Individual badging was generally carried out for persons expected to be exposed to higher levels of radiation.

The badges measured external gamma and high energy beta radiation, as these were the types of greatest concern. They did not measure direct neutron radiation, to which few, if any, participants were exposed. Nor did the badges measure low energy beta, which would not penetrate the badge covering (just as it would not penetrate clothing or skin). Finally, the badges did not measure any dose commitment that may have occurred from inhalation or ingestion of radioactive particles. All research and analysis to date indicate that there is little likelihood that test participants inhaled or ingested any significant amounts of radiation; however additional studies are underway, and the possibility should not be entirely discounted.

Film badges and dosimeters were subject to errors that should be taken into account in assessing dose received. An error factor of ±20% is generally recognized as reasonable for the badges and dosimetes used at that time, and as high as ±50% in some instances.

2. *Health Effects of Ionizing Radiation.*

a. *Acute Somatic Effects.* Individuals exposed to high levels and rates of ionizing radiation may experience acute somatic effects within days or weeks after exposure. The ITF reported that single, wholebody doses of over 100 rem can affect bone marrow cells and cells lining the intestinal tract, causing such effects as anemia, hemorrhage, infections, nausea and diarrhea. High doses were also said to cause neural cell damage. Chromosomal damage occurs at lower dose levels, as well as high doses.

b. *Late Somatic Effects.* Although there are little positive data on the health effects of low-dose radiation, some negative data (Japanese atom bomb survivors, studies of background radiation) do exist. The failure to show positive results in these studies is attributed to the small sample sizes, since large samples are needed to reveal the relatively infrequent effects expected at low doses.

A recent study by the Center for Disease Control, reported in the Journal of the American Medical Association issue of October 3, 1980, noted preliminay findings indicating that nine cases of leukemia have occurred among 3,224 participants in military maneuvers during the 1957 nuclear test explosion "Smoky." This figure represents a statistically significant increase over the expected incidence of 3.5 cases in a population of that size. Film badge data for eight of the leukemia victims were available, with gamma doses ranging from zero to 2,977 mrem. Mean gamma dose among the eight cases was 1,167 mrem. the report noted that the dosage data were of uncertain accuracy, since the film badges may have been worn at other tests in addition to Smoky, and they recorded only external (gamma and beta) radiation without measuring possible internal exposure or neutron radiation. Further, the authors cautioned that inherent weaknesses of the study, such as the relatively small number of cases involved, make it difficult to draw useful conclusion as to the relationship between radiation exposure and subsequent health problems. Thus far, the authors have failed to note increased mortality from any form of cancer other than leukemia. A much larger group of former test participants is the subject of an extensive, Government-funded morbidity/mortality study currently being undertaken by the National Academy of Sciences.

Current estimates of low-dose health effects are based on studies of medical exposure, as well as the Japanese atom bomb survivors.

Cancer is the major disease associated with radiation exposure. Certain sites (e.g., blood-forming tissue, female breast) appear more sensitive, but other tissues also are shown to be at increased risk. It is not unlikely that eventually all tissue may be shown to be subject to radio-carcinogenesis.

Various types of cancer have been linked to radiation by epidemiological studies conducted among (1) persons exposed to atom bomb radiation and fallout, (2) persons exposed to diagnostic or therapeutic radiation, and (3) persons exposed to radiation in their occupations.

The following cancers show strong associations:

leukemia (except chronic lymphatic leukemia)

thyroid

female breast
lung
bone
liver
skin

The following cancers show associations that appear meaningful but are less striking:

lymphoma (including multiple myeloma)
stomach
esophagus
bladder
brain
salivary gland
colon
rectum

The following cancers show suggestive but unconfirmed associations:

uterus
cervix
kidney
pancreas
small intestine

The ITF acknowledged that ongoing and proposed reseach will permit a more definitive listing of late somatic effects of low-level ionizing radiation.

There are no distinguishable pathological features of the cancers induced by radiation from which they may be differentiated from cancers due to "natural" factors. It is thus impossible to say *with certainty* whether such a disease would have occurred regardless of the radiation exposure.

In the absence of acceptable hard data on the latent effects of low level radiation, the ITF reports, it has been necessary to assume that there is a directly proportional or "linear" relationship between the risks of high and low doses. This theory assumes as well that there is no threshold level of exposure below which radiation will not have any potentially carcinogenic effect. These assumptions have been criticized as both underestimating and overestimating the potential hazard of low-dose exposure, although it would appear that they currently offer a sound basis for projecting this risk.

The Work Group on Care and Benefits of the ITF reported a "natural" incidence of fatal cancer of 1,600 in any population of 10,000. They provided the estimate of one additional death for each additional rem to which the entire group was exposed; for example, if all in a group of 10,000 were exposed to one rem in addition to naturally occurring background radiation, there would be only one fatal cancer beyond the 1,600 otherwise expected. Since the 200,000 test participants received an average dose of about half a rem, some *ten* fatal cancers from among the entire group can be expected over the lifetime of the participants which might be statistically related to radiation exposure. On the other hand, some 32,000 fatal cancers *not* related to this radiation can be expected.

c. *Genetic Effects.* Experimental studies in animals have shown that radiation can produce gene mutations which can result in abnormalities in later generations. However, no genetic effects have ever been observed in humans, despite much data and extensive study.

3. *Development of Evidence.* Claims for disabilities based upon such exposure pose unique development problems for claimants and special assistance should be extended to them. Paragraph 22.05.1 of M21-1 provides for Central Office coordination of the search of Government records for exposure data, and lists the identifying information necessary for these special searches to ensue.

4. *Adjudication of Claims— Reasonable Doubt.* The problems inherent in the adjudication of claims in which there are allegations of late somatic effects of radiation are many. The records obtained may not conclusively place an individual at a test site or elsewhere, or document with certainty the dosage of exposure in a given claim. The resolution of reasonable doubt in a claimant's favor requires that, at a minimum, veterans be presumed to have been present at a test or series of tests as claimed unless the service department conclusively places them elsewhere at the time in question. Also, when an individual dosimetry reading for a claimant is not available but the service department is able to supply or estimate a range of exposure for the claimant's organizational unit, exposure at the upper limit of the range is to be conceded.

In keeping with the application of the reasonable doubt standard, even where an individual dosimeter reading is available, the reading should be carefully interpreted in light of the known variance in those readings. Further, an overall estimated exposure level for the veteran's organizational unit, if any, should be used if more beneficial to the veteran than the adjusted dosimeter reading.

The many remaining unknowns concerning the carcinogenic effects of low-level radiation make such determinations especially perplexing. It should presently be assumed, however, that there is no level of exposure below which some risk does not attach, and that the probability of radiation-induced disease increases with the intensity and duration of exposure. That is not to say that dosage should be the sole, or even controlling, criterion. Consideration should be given to such factors as the estimated date of onset of the disease in relation to the dates of exposure, and where available, to such postservice personal and occupational histories as cigarette smoking (in lung cancer cases) and significant contact with other known carcinogens (such as benzene in leukemia cases.)

Where the evidence in its entirety creates a reasonable doubt as distinguished from speculation or remote possibility, such doubt should be resolved in favor of service connection. Additionally, there should be no hesitancy in submitting claims based on malignancies to Central Office (212) for advisory opinions.

5. *Copies of Rating Sheets Furnished to Compensation and Pension Service.* The copies of rating sheets furnished in accordance with M21-1, paragraph 49.06a(6)(a), should contain the dates and branch of service; serial number; name, date and location of all A-tests attended; the military unit to which assigned at time of test; duty assignment at test; dosimetry reading or amount of radiation exposure, if known; and any other identifying information which would assist in any further search for information.

[FR Doc. 80-40823 Filed 12-30-80; 8:45 am]
BILLING CODE 8320-01-M

Sunshine Act Meetings

Federal Register
Vol. 45, No. 252
Wednesday, December 31, 1980

This section of the FEDERAL REGISTER contains notices of meetings published under the "Government in the Sunshine Act" (Pub. L. 94-409) 5 U.S.C. 552b(e)(3).

CONTENTS

	Items
Federal Deposit Insurance Corporation	1, 2
Federal Mine Safety and Health Review Commission	3
Federal Reserve System (Board of Governors)	4
Federal Trade Commission	5
International Trade Commission	6
National Science Board	7

1

FEDERAL DEPOSIT INSURANCE CORPORATION.

Changes in Subject Matter of Agency Meeting

Pursuant to the provisions of subsection (e)(2) of the "Government in the Sunshine Act" (5 U.S.C. 552b(e)(2)), notice is hereby given that at its open meeting held at 11 a.m. on Monday, December 22, 1980, the Corporation's Board of Directors determined, on motion of Chairman Irvine H. Sprague, seconded by Director William M. Isaac (Appointive), concurred in by Mr. H. Joe Selby, acting in the place and stead of Director John G. Heimann (Comptroller of the Currency), that Corporation business required the addition to the agenda for consideration at the meeting, on less than seven days' notice to the public, of the following matters:

Recommendations with respect to payment for legal services rendered and expenses incurred in connection with receivership and liquidation activities:

Bronson, Bronson & McKinnon, San Francisco, California, in connection with the receivership of United States National Bank, San Diego, California.

Schall, Boudreau & Gore, San Diego, California, in connection with the receivership of United States National Bank, San Diego, California.

Gonzalez & Alonso, Hato Rey, Puerto Rico, in connection with the liquidation of Banco Credito y Ahorro Ponceno, Ponce, Puerto Rico.

The Board further determined, by the same majority vote, that no earlier notice of the changes in the subject matter of the meeting was practicable.

Dated: December 22, 1980.

Federal Deposit Insurance Corporation.

Hoyle L. Robinson,

Executive Secretary.

[S-2363-80 Filed 12-29-80; 11:24 am]

BILLING CODE 6714-01-M

2

FEDERAL DEPOSIT INSURANCE CORPORATION.

Changes in Subject Matter of Agency Meeting

Pursuant to the provisions of subsection (e)(2) of the "Government in the Sunshine Act" (5 U.S.C. 552b(e)(2)), notice is hereby given that at its closed meeting held at 11:30 a.m. on Monday, December 22, 1980, the Corporation's Board of Directors determined, on motion of Chairman Irvine H. Sprague, seconded by Director William M. Isaac (Appointive), concurred in by Mr. H. Joe Selby, acting in the place and stead of Director John G. Heimann (Comptroller of the Currency), that Corporation business required the addition to the agenda for consideration at the meeting, on less than seven days' notice to the public, of the following matters:

Application of State Bank of India (California), a proposed new bank, to be located at United California Bank Building, Suite 1995, 707 Wilshire Boulevard, Los Angeles, California, for Federal deposit insurance.

Application of Fidelity Management Trust Company, a proposed new bank, to be located at 82 Devonshire Street, Boston, Massachusetts, for Federal deposit insurance and for consent to exercise trust powers.

Application of Banco Central y Economias, San Juan (Hato Rey), Puerto Rico, for consent to exercise trust powers.

Application of Albany Savings Bank, Albany, New York, for consent to establish a branch in the Sangertown Square Mall, in the vicinity of the junction of Routes 5 and 5A, New Hartford, New York.

Application of Home Savings Bank of Upstate New York, Albany, New York, for consent to establish a branch on Columbia Turnpike, 200 yards southwest of Sherwood Avenue, Town of East Greenbush, New York.

Application of Auburn Savings Bank, Auburn, New York, for consent to establish a branch at 34 South Main Street, Moravia, New York.

Application of The Community Savings Bank, Rochester, New York, for consent to establish a branch at the southeast corner of Muller Boulevard and Jefferson Road, Town of Henrietta, New York.

Application of Monroe Savings Bank, Rochester, New York, for consent to establish a branch at 18 State Street, Village of Pittsford, New York.

Application of The Peoples State Bank of St. Joseph, St. Joseph, Michigan, an insured State nonmember bank, for consent to consolidate under its charter and title with The First National Bank of Watervliet, Watervliet, Michigan, and for consent to establish the four offices of The First National Bank of Watervliet as branches of the resultant bank.

Application of The Home Savings Bank in Boston, Boston, Massachusetts, an insured mutual savings bank, for consent to purchase the assets of and assume the liability to pay deposits made in Boston Progressive Credit Union, Boston (P.O. Roxbury), Massachusetts, a non-Federally-insured financial institution chartered under the laws of the Commonwealth of Massachusetts, and for consent to establish the sole office of Boston Progressive Credit Union as a branch of The Home Savings Bank in Boston.

Recommendation regarding First Pennsylvania Bank, Bala-Cynwyd, Pennsylvania, and First Pennsylvania Corporation, Philadelphia, Pennsylvania.

Recommendations regarding the liquidation of a bank's assets acquired by the Corporation in its capacity as receiver, liquidator, or liquidating agent of those assets:

Case No. 44,580-L—Franklin National Bank, New York, New York

Case No. 44,584-SR—American Bank & Trust Company, New York, New York

Case No. 44,594-L—The Hamilton National Bank of Chattanooga, Chattanooga, Tennessee

Case No. 44,596-L—Franklin National Bank, New York, New York

Case No. 44,604-L—The Mission State Bank and Trust Company, Mission, Kansas

Case No. 44,608-L—The Hamilton National Bank of Chattanooga, Chattanooga, Tennessee

Case No. 44,611-L—Algoma Bank, Algoma, Wisconsin

Memorandum and Resolution re: Surety Bank and Trust Company, Wakefield, Massachusetts

Memorandum and Resolution re: American Bank & Trust Company, New York, New York

Memorandum and Resolution re: American Bank & Trust Company, New York, New York

Memorandum and Resolution re: Franklin National Bank, New York, New York

Memorandum and Resolution re: American City Bank & Trust Company, National Association, Milwaukee, Wisconsin

Reports of Committees and Officers:

Report of Director, Division of Liquidation:

Memorandum re: Reports Required Under Delegated Authority, Sale of Lots

The Board further determined, by the same majority vote, that no earlier notice of the changes in the subject matter of the meeting was practicable; that the public interest did not require consideration of the matters in a meeting open to public observation; and that the matters could be considered in a closed meeting by authority of subsections (c)(4), (c)(6), (c)(8), (c)(9)(A)(ii), (c)(9)(B), and (c)(10) of the "Government in the Sunshine Act" (5 U.S.C. 552(c)(4), (c)(6), (c)(8), (c)(9)(A)(ii), (c)(9)(B), and (c)(10)).

Dated: December 22, 1980.

Federal Deposit Insurance Corporation.

Hoyle L. Robinson,

Executive Secretary.

[S-2364-80 Filed 12-29-80; 11:26 am]

BILLING CODE 6714-01-M

3

FEDERAL MINE SAFETY AND HEALTH REVIEW COMMISSION.

December 24, 1980.

TIME AND DATE: 10 a.m., Wednesday, December 31, 1980.

PLACE: Room 600, 1730 K Street NW., Washington, D.C.

STATUS: Open.

MATTERS TO BE CONSIDERED: The Commission will consider and act upon the following:

1. Jackie Ray Hammonds v. National Mines Corp., Docket No. KENT 79-345-D. (Petition for Discretionary Review; issues include whether default was appropriate.)
2. Salt Lake County (Highway Division), Docket No. WEST 79-365-M. (Petition for Discretionary Review; issues include whether the activity involved is subject to the jurisdiction of the 1977 Mine Act.)
3. Local Union 781, District 17, United Mine Workers of America v. Eastern Associated Coal Corp., Docket No. WEVA 80-473-C. (Petition for Discretionary Review; issues include whether miners are due compensation under section III of the 1977 Mine Act.)

CONTACT PERSON FOR MORE INFORMATION: Jean Ellen, 202-653-5632.

[S-2360-80 Filed 12-29-80; 10:56 am]

BILLING CODE 6820-12-M

4

FEDERAL RESERVE SYSTEM.

Board of Governors.

TIME AND DATE: 10 a.m., Monday, January 5, 1981.

PLACE: 20th Street and Constitution Avenue NW., Washington, D.C. 20551.

STATUS: Closed.

MATTERS TO BE CONSIDERED:

1. Federal Reserve Bank and Branch director appointments.
2. Personnel actions (appointments, promotions, assignments, reassignments, and salary actions) involving individual Federal Reserve System employees.

CONTACT PERSON FOR MORE INFORMATION: Mr. Joseph R. Coyne, Assistant to the Board; (202) 452-3204.

Dated: December 29, 1980.

Theodore E. Allison,

Secretary of the Board.

[S-2062-80 Filed 12-29-80; 11:00 am]

BILLING CODE 6210-01-M

5

FEDERAL TRADE COMMISSION.

"FEDERAL REGISTER" CITATION OF PREVIOUS ANNOUNCEMENT: FR 45, December 10, 1980, p. 81353.

PREVIOUSLY ANNOUNCED TIME AND DATE OF THE MEETING: 10 a.m., Wednesday, December 17, 1980.

CHANGES IN THE AGENDA: The Federal Trade Commission has deleted this matter from the agenda of its previously announced open meeting of Wednesday, December 17, 1980.

[S-2361-80 Filed 12-29-80; 10:58 am]

BILLING CODE 6750-01-M

6

[USITIC SE-80-61]

INTERNATIONAL TRADE COMMISSION.

TIME AND DATE: 10 a.m., Wednesday January 14, 1981.

PLACE: Room 117, 701 B Street, NW., Washington, D.C. 20436.

STATUS: Open to the public.

MATTERS TO BE CONSIDERED:

1. Agenda.
2. Minutes.
3. Ratifications.
4. Petitions and complaints, if necessary:
   a. Surface grinding machines (Docket No. 701).
   b. Modular pushbutton switches (Docket No. 702).
   c. Steel rod treating apparatus (Docket No. 703).
5. Any items left over from previous agenda.

CONTACT PERSON FOR MORE INFORMATION: Kenneth R. Mason, Secretary (202) 523-0161.

[S-80-2366 Filed 12-29-80; 4:00 pm]

BILLING CODE 7020-02-M

7

NATIONAL SCIENCE BOARD.

DATE AND TIME:

January 15, 1981, 2 p.m., open session

January 16, 1981

8:30 a.m., open session

9:30 a.m., closed session

PLACE: 1800 G Street NW., Washington, D.C.

STATUS: Parts of this meeting will be open to the public. The rest of the meeting will be closed to the public.

MATTERS TO BE CONSIDERED AT THE OPEN SESSIONS: Thursday, January 15, 2 p.m.:

1. Minutes—Open Session—221st Meeting
2. Chairman's Items
3. Director's Report
   a. Report on Grant & Contract Activity—11/20/80-1/14/81
   b. Organizational and Staff Changes
   c. Congressional and Legislative Matters
   d. NSF Budget for Fiscal Year 1981
   e. Status Report on NSF Reorganization
   f. Other Items
4. Board Committees—Reports on Meetings (continued on January 16)
5. Representation at Future NSF Advisory Groups
6. Faculty Effort Reporting Under OMB Circular No. A-21
7. Other Business
8. Next Meeting National Science Board—February 19-20, 1981

Friday, January 16, 8:30 a.m.:

4. Board Committees—Reports on Meetings (continued from January 15)
9. Grants, Contracts, and Programs

MATTERS TO BE CONSIDERED AT THE CLOSED SESSION: Friday, January 16, 9:30 a.m.:

A. Minutes—Closed Session—221st Meeting
B. Grants, Contracts, and Programs
C. NSF Budgets for Fiscal Year 1982 and Subsequent Years
D. NSB Annual Reports
E. NSB and NSF Staff Nominees
F. Personnel Implications of Proposed Reorganization of NSF

CONTACT PERSON FOR MORE INFORMATION: Miss Vernice Anderson Executive Secretary, (202) 357-9582.

[S-2365-80 Filed 12-29-80; 4:00 pm]

BILLING CODE 7555-01-M

Reader Aids

Federal Register
Vol. 45, No. 252
Wednesday, December 31, 1980

INFORMATION AND ASSISTANCE

PUBLICATIONS

Code of Federal Regulations

CFR Unit	202-523-3419 523-3517
General information, index, and finding aids	523-5227
Incorporation by reference	523-4534
Printing schedules and pricing information	523-3419

Federal Register

Corrections	523-5237
Daily Issue Unit	523-5237
General information, index, and finding aids	523-5227
Public Inspection Desk	633-6930
Scheduling of documents	523-3187

Laws

Indexes	523-5282
Law numbers and dates	523-5282 523-5266
Slip law orders (GPO)	275-3030

Presidential Documents

Executive orders and proclamations	523-5233
Public Papers of the President	523-5235
Weekly Compilation of Presidential Documents	523-5235

Privacy Act Compilation	523-3517
United States Government Manual	523-5230

SERVICES

Agency services	523-3408
Automation	523-3408
Dial-a-Reg	
Chicago, Ill.	312-663-0884
Los Angeles, Calif.	213-688-6694
Washington, D.C.	202-523-5022
Magnetic tapes of FR issues and CFR volumes (GPO)	275-2867
Public briefings: "The Federal Register—What It Is and How To Use It"	523-5235
Public Inspection Desk	633-6930
Regulations Writing Seminar	523-5240
Special Projects	523-4534
Subscription orders and problems (GPO)	783-3238
TTY for the deaf	523-5239

FEDERAL REGISTER PAGES AND DATES, DECEMBER

79407-79740 1
79741-80096 2
80097-80266 3
80267-80462 4
80463-80806 5
80807-81022 8
81023-81198 9
81199-81528 10
81529-81724 11
81725-82150 12
82151-82618 15
82619-82908 16
82909-83188 17
83189-83464 18
83465-84004 19
84005-84754 22
84755-84952 23
84953-85434 24
85435-85650 29
85651-86406 30
86407-87012 31

CFR PARTS AFFECTED DURING DECEMBER

At the end of each month, the Office of the Federal Register publishes separately a list of CFR Sections Affected (LSA), which lists parts and sections affected by documents published since the revision date of each title.

1 CFR

51 ..... 79489, 81484, 86672
302 84953
305 ..... 84953, 86407

3 CFR

Administrative Orders:
Notice of Intent of November 28, 1980 (Request for comments) 79407
Memorandums:
December 3, 1980 80465
December 17, 1980 83467
Presidential Determinations:
No. 73-10 of January 2, 1973 (Amended by Presidential Determination No. 80-29 of December 4, 1980) 82619
No. 80-29 of December 4, 1980 82619
No. 80-30 of December 9, 1980 83465
Executive Orders:
Executive Order of November 24, 1903 (Revoked in part by PLO 5787) 80828
July 19, 1915 (Revoked in part by PLO 5795) 85024
12254 80463
12255 80807
12256 83189
12257 84005
Proclamations:
4807 80809
4808 82151
4809 83469
4810 85435

4 CFR

Ch. III 79409
31 84954
33 84954
34 84954
82 84954

5 CFR

Ch XIV 80467
213 ..... 81023-81029, 81725, 82621, 83471, 84755
214 83471
317 80467
330 85651
351 ..... 81725, 83471, 85651
352 83471
359 80467
412 80468
536 85654
551 85659
581 85666
734 83472
831 85684
870 ..... 80472, 84955, 85685
871 ..... 84955, 85685
872 ..... 84955, 85685
873 ..... 84955, 85685
890 ..... 81728, 85695
930 81029
1001 83473
1304 84007
Proposed Rules:
1 79846
213 84808
890 81764

7 CFR

2 ..... 80477, 82153, 85696
20 83191
28 86673
31 86673
32 86673
46 81529
201 86673
210 ..... 82621, 82886
215 82621
220 82621
225 85437
250 82892
271 ..... 81030, 85697
272 ..... 81030, 85697
273 ..... 79741, 83473
275 81030
277 85699
300 86673
301 86673
319 81530
330 80267
331 ..... 81728, 86673
419 ..... 81531, 85438
430 85438
713 79743
725 80477
729 80479
730 79745
795 79746
800 ..... 79736, 83182
802 80985
905 ..... 80269, 81199, 82909, 83192
907 ..... 80269, 81532, 83193, 84966
910 ..... 80481, 81731, 83474, 85717
911 80270
912 82909
913 82909
915 80270
928 81731
965 82909
966 80270
979 82911

982....86673
984....83475
987....83194
989....81532
1133....81199
1421....81533, 81534, 84009
1423....84009
1427....84009
1490....83194
1701....81732, 82623, 83475, 84756, 86673
1901....79747
2851....84755, 86680
2858....86680
Proposed Rules:
250....82888
273....80790, 84810
282....80804
631....81210
907....80117, 84070
959....80533, 84070
982....79818
989....81058
1001....85767
1002....85767
1004....85767
1006....85767
1007....85767
1011....85767
1012....85767
1013....85767
1030....85767
1032....85767
1033....85767
1036....85767
1040....85767
1044....85767
1046....85767
1049....85767
1050....85767
1062....85767
1064....85767
1065....85767
1068....85767
1071....85767
1073....85767
1075....85767
1076....85767
1079....85767
1093....85767
1094....85767
1096....85767
1097....85767
1098....85767
1099....85767
1102....85767
1104....85767
1106....85767
1108....85767
1120....85767
1124....85767
1125....85767
1126....85767
1131....85767
1132....85767
1133....85767
1134....85767
1135....79818, 85767
1136....85767
1137....85767
1138....85767
1139....85767
1280....80535
1421....85039
1425....85041
1435....82270
1438....79492
1446....85039
1924....83244
1942....81211
1951....83244
1955....82653
2859....79819

8 CFR

204....84010
238....81535, 82154, 84011, 86409
292....81732, 86409
335....83195
341....84011

9 CFR

51....86409
53....86410
77....86680
78....85718, 86680
82....80097, 80813, 81535, 83476
83....84966
91....86411
92....80098, 85438, 85720
113....86680
319....86680
325....86680
Proposed Rules:
91....85767
94....82654
201....87002
203....87002
308....79819
312....81764
316....81764
381....79819

10 CFR

Ch. II....82572
1....80270
20....86682
30....79409
35....86680
40....79409, 84967
50....79409, 84967, 86681
72....80271
73....79410, 80271, 83195, 86681
75....84967
110....86682
150....79409, 80271, 84967
170....84967
210....86682
211....82586, 84757, 86682
212....80482, 81008, 86682
378....84928
420....86683
430....86683
436....86684
440....86684
455....85610
456....86684
475....86687
503....84967
504....84967
903....86976
Proposed Rules:
Ch. I....79819
2....86459
50....79820, 81602, 86500
51....79820
70....79409, 84967, 85459
71....81058
73....79492, 81060
100....79820
212....84920
436....84810
455....85610
599....81012
745....80830

12 CFR

Ch. VI....81733
201....82623
203....80813
204....79748, 81536
205....79750
211....81537
225....81537
262....81541, 81543
303....79410
309....79410
522....81545
541....82154
544....82154
545....82154, 82161, 83196
550....82162
556....83196
561....82154
563....82154, 82168, 84985
563c....82154
563f....84012
569a....82154
571....82162
577....82154
578....82154
701....79412, 81032, 85723, 86687
1204....84987
Proposed Rules:
Ch. VII....85052
5....85042
8....85045
29....79493
204....84070
217....84070
220....83510
226....80648, 84074
545....79493, 82270, 85048
590....86500
701....79494, 82955
721....84811
741....82955
1204....85056–85059

13 CFR

113....81734, 86687
122....80483
124....79413, 82912
Proposed Rules:
115....85059
124....79496, 80117

14 CFR

11....80815, 85559
21....80972, 85559
23....80972, 85600, 86688
25....85600, 86687
27....86688
29....86687
36....80972, 86687
39....79415, 79416, 80271, 81545–81547, 82169, 83200–83202, 84013–84018, 86688
45....85597
71....80272, 81548, 82170, 83203, 83204, 84019, 85439–85411
73....85442
75....80273, 83205, 85441, 85443
91....80972, 86687
93....85604
95....81549
97....81554, 85444, 86688
121....80972, 86687
125....84020
127....86687
135....80460, 80972, 86687
139....80972
152....86689
203....86413
221....87008, 87010
252....83206
298....83207, 84989
322....79750
323....84990
325....79751
374a....80098
385....79752, 80816, 83207, 87010
399....82624
1208....86414
Proposed Rules:
21....80434, 80450
23....80450
25....80450
27....83424
29....80450, 83424
39....80434, 80830, 84075
43....80450
45....80450
61....80450
63....80450
65....80450
67....80295, 80296
71....80831–80833, 81603, 82270, 84075, 85467
73....82270, 85467
91....80434, 80450
93....83252, 84380
121....80450
129....80450
135....80450
211....80117
215....80117
218....80117
221....80124, 82656, 87012
233....83510
241....85064
271....83254
294....80117
296....80124, 85075
297....80124, 85075
300....81604
302....83510, 85076
380....80117
385....80117
399....80117

15 CFR

4b....82102
363....84020
368....84021
369....84021
370....84021
371....84021
372....84021
373....84021
374....84021
375....84021, 84760
376....80484, 84021

377 ... 84021
378 ... 84021, 85446
379 ... 80484, 84021
385 ... 85916
386 ... 84021
387 ... 84021
388 ... 84027
389 ... 85447
399 ... 85446, 85916

Proposed Rules:
923 ... 85769
931 ... 85769
1001 ... 81062

16 CFR
13 ... 79753, 81036, 81555, 82625, 82913, 84034
1000 ... 80816, 86415
1030 ... 82914
1201 ... 86691
1205 ... 86416
1402 ... 86691
1505 ... 86691
1512 ... 82625
1615 ... 86691
1632 ... 86691

Proposed Rules:
4 ... 82956
13 ... 80301, 82656, 84076
441 ... 80307
444 ... 85076
456 ... 79823, 80833
1011 ... 82066
1012 ... 82066
1013 ... 82066
1020 ... 85772
1201 ... 85777
1508 ... 82659
1509 ... 82659

17 CFR
1 ... 79416, 79753, 80485, 84761
3 ... 80485, 82915, 84761
229 ... 86422
239 ... 86422
240 ... 79425, 80834, 81556, 83477
241 ... 81558
249 ... 83478, 84992
270 ... 83479

Proposed Rules:
1 ... 79498, 79831, 84082, 84084
3 ... 80539
145 ... 80539
147 ... 80539
210 ... 83517
230 ... 83259
239 ... 83517
270 ... 83517
274 ... 83517

18 CFR
1 ... 80816
271 ... 80273, 84034–84036
282 ... 79427, 80817, 80818, 82171, 82915, 86423

Proposed Rules:
35 ... 82272
125 ... 82957
225 ... 82957
260 ... 81062
271 ... 81063, 84814, 85779
282 ... 80125, 81211, 84823
292 ... 80308, 80551

19 CFR
6 ... 80099
162 ... 84993
177 ... 80100
201 ... 80275
353 ... 84994

Proposed Rules:
10 ... 83260
12 ... 79730
18 ... 85780
101 ... 82665
127 ... 79730
132 ... 85781
141 ... 85781
142 ... 85781
200 ... 82957
212 ... 81605

20 CFR
Ch. I ... 81160
Ch. IV ... 81160
Ch. V ... 81160
Ch. VI ... 81160
Ch. VII ... 81160
397 ... 86423
398 ... 86423
656 ... 83926
903 ... 84994

Proposed Rules:
Ch. III ... 83816
208 ... 81064
210 ... 81064
216 ... 81064
217 ... 81064
219 ... 81064
221 ... 81064
230 ... 81064
232 ... 81064
237 ... 81064
238 ... 81064
404 ... 79501, 84086
416 ... 79501, 84087
689 ... 81768

21 CFR
14 ... 85724
73 ... 85725
81 ... 85725
102 ... 80497
131 ... 81734
145 ... 84761
146 ... 80499
173 ... 85726
176 ... 80500
178 ... 85726
500 ... 86272
510 ... 79757, 81037, 81737, 83484, 85727
520 ... 81738, 84761
522 ... 79757, 81037, 83483
540 ... 81738
548 ... 81038
558 ... 83483, 83484, 84762
607 ... 85727
640 ... 80500
1005 ... 81739
1030 ... 80501

Proposed Rules:
Ch. I ... 83816
106 ... 86362
109 ... 79856
110 ... 79856
137 ... 81064
165 ... 84837
180 ... 82666, 84837
182 ... 82666, 84837
225 ... 79856
226 ... 79856
310 ... 81154
351 ... 82014
358 ... 80551, 84836
436 ... 84836
446 ... 84836
500 ... 79856
509 ... 79856
546 ... 84836
600 ... 81065, 84837, 85785
606 ... 81065, 84837
610 ... 81065, 84837
620 ... 81065, 84837
630 ... 81065, 84837
640 ... 81065, 84837
660 ... 81065, 84837
814 ... 81769
872 ... 85962

22 CFR
3 ... 80818
41 ... 80834, 81560, 81739

Proposed Rules:
22 ... 81778
121 ... 83970
122 ... 83970
123 ... 83970
124 ... 83970
125 ... 83970
126 ... 83970
127 ... 83970
128 ... 83970
129 ... 83970
130 ... 83970
181 ... 81606

23 CFR
771 ... 85449
1217 ... 84037

Proposed Rules:
635 ... 80836

24 CFR
42 ... 81740
201 ... 79427
203 ... 79427
205 ... 79427
207 ... 79427
213 ... 79427
215 ... 84046
221 ... 79427
234 ... 79427
235 ... 79427
236 ... 79427
241 ... 79427, 80276
244 ... 79427
841 ... 80012
888 ... 82171
3282 ... 82854
3400 ... 84048
3610 ... 81743

Proposed Rules:
51 ... 83261
201 ... 81781
207 ... 82958
213 ... 82958
215 ... 80836
221 ... 82958
232 ... 82958
235 ... 82667
241 ... 80836, 82958
242 ... 82958
510 ... 80308
570 ... 82272, 82273
885 ... 80836
891 ... 82273
1800–1835 ... 83267
3500 ... 80308

25 CFR
43b ... 82918
43c ... 82921
233 ... 81560

Proposed Rules:
23 ... 81781
72 ... 82667, 84088

26 CFR
1 ... 81743, 84048, 85730, 86428, 86433, 86438
7 ... 84048
150 ... 81561

Proposed Rules:
1 ... 80837, 81066, 84088, 84089, 85077, 85786, 85787
48 ... 80309
51 ... 80551, 80554, 81606
142 ... 80309
144 ... 80309
301 ... 85788

27 CFR

Proposed Rules:
4 ... 82275, 83530
5 ... 83530
7 ... 83530
9 ... 82470, 82472

28 CFR
0 ... 79758, 81201, 81745, 82631
2 ... 84052–84054
16 ... 83208
17 ... 81490
58 ... 82631
524 ... 83920

Proposed Rules:
2 ... 81212, 84090

29 CFR
1601 ... 81039
1606 ... 85632
1910 ... 85736
1952 ... 83484, 83485, 85739
2602 ... 80822
2610 ... 82172

Proposed Rules:
Subtitle A ... 81160
Ch. II ... 81160
Ch. IV ... 81160
Ch. V ... 81160
Ch. XVII ... 81160
Ch. XXV ... 81160
Ch. XXVI ... 84090
4 ... 81785
452 ... 80555
505 ... 83914
530 ... 80555
1910 ... 80078
2520 ... 85793

30 CFR
71 ... 80746
75 ... 80501
90 ... 80760

211 ... 84762
221 ... 84762
231 ... 84762
250 ... 81562
270 ... 84762
716 ... 83166
850 ... 82084
906 ... 82173
920 ... 79431
931 ... 86459
934 ... 82214
950 ... 84765

Proposed Rules:

Ch. I ... 81160
Ch. VII ... 81526
250 ... 84824
602 ... 82669
915 ... 82276
916 ... 84824
935 ... 85797
936 ... 80837
944 ... 84824
948 ... 83544
950 ... 82675

31 CFR

128 ... 83213

32 CFR

1-39 ... 81402
46 ... 84766
62a ... 84995
143 ... 84055
159 ... 79759
166 ... 83486
286 ... 80502
299a ... 80106
354 ... 84996
505 ... 83214
553 ... 80521
581 ... 82925
700 ... 80277

Proposed Rules:

Ch. I ... 79508
Ch. V-VII ... 79508
Ch. XVI ... 80125
294a ... 82960

33 CFR

148 ... 85644
150 ... 85644
157 ... 82248
161 ... 84057
165 ... 82251, 85449
183 ... 85449

Proposed Rules:

Ch. II ... 79508
82 ... 83267
88 ... 85468
89 ... 85468
117 ... 80839, 81607
155 ... 83268
161 ... 85471
162 ... 81607
179 ... 85475
181 ... 85476
320 ... 79836
321 ... 79836
322 ... 79836
323 ... 79836
324 ... 79836
325 ... 79836
326 ... 79836
327 ... 79836
328 ... 79836
329 ... 79836
330 ... 79836

34 CFR

Subtitle A ... 86296
Subtitle B ... 86296
Ch. I ... 86296
Ch. II ... 86296
Ch. III ... 86296
Ch. IV ... 86296
Ch. V ... 86296
Ch. VI ... 86296
Ch. VII ... 86296
3 ... 86490
75 ... 84058
76 ... 84058
104 ... 86390
240 ... 80988
241 ... 84058
300 ... 86390
385 ... 86378
386 ... 86378
387 ... 86378
388 ... 86378
389 ... 86378
390 ... 86378
604 ... 83220
655 ... 86872
656 ... 86872
658 ... 86872
660 ... 86872
667 ... 86872
668 ... 86854
674 ... 84768
675 ... 84768
676 ... 84768
690 ... 86394
773 ... 84058
776 ... 85422
778 ... 85430
797 ... 86372

Proposed Rules:

78 ... 86502
104 ... 85082
201 ... 86306
206 ... 86333
222 ... 86311
280 ... 83269
300 ... 85082
350 ... 86317
351 ... 86317
352 ... 86317
353 ... 86317
354 ... 86317
355 ... 86317
356 ... 86317
385 ... 86315
386 ... 86315
387 ... 86315
388 ... 86315
389 ... 86315
390 ... 86315
605 ... 86308
606 ... 86315
617 ... 86340
618 ... 86340
619 ... 86340
620 ... 86340
621 ... 86340
629 ... 86328
631 ... 86932
632 ... 86932
633 ... 86932
634 ... 86932
635 ... 86932
639 ... 86890
642 ... 86922
643 ... 86908
644 ... 86894
645 ... 86914
646 ... 86900
648 ... 86886
650 ... 86928
651 ... 86331
655 ... 86504
656 ... 86504
658 ... 86504
660 ... 86504
667 ... 86504
690 ... 86333
692 ... 86304
703 ... 86336
773 ... 84950
774 ... 86306
777 ... 86312
805 ... 80150

35 CFR

Proposed Rules:

60 ... 86278
103 ... 80313, 85480

36 CFR

7 ... 85741
50 ... 84997
1120 ... 80976
1208 ... 83488
1212 ... 81184

Proposed Rules:

Ch. III ... 79508
7 ... 82278, 85480
223 ... 80526
1150 ... 82080
1190 ... 84826

38 CFR

17 ... 80529
36 ... 79802, 79803

Proposed Rules:

Ch. I ... 83270
3 ... 81787
21 ... 81068, 81213, 84096

39 CFR

10 ... 82925
111 ... 79804, 81563, 84060
3001 ... 83222

Proposed Rules:

111 ... 81787, 84826, 86504

40 CFR

Ch. I ... 81746, 81752
22 ... 79808
35 ... 81567, 83497, 84998
51 ... 80084, 80824
52 ... 79451, 79808, 80279, 80530, 81041, 82251, 82252, 82632, 82926, 82927, 83227, 84769, 84999-85007, 85744, 85748
56 ... 85400
57 ... 85009
60 ... 79452, 83228, 85016, 85416
62 ... 80826
81 ... 80826, 84769
86 ... 81202
87 ... 86946
120 ... 81042
122 ... 86966
123 ... 81757, 81758, 83229, 83498, 85016
180 ... 82633, 82927, 85021, 86492
205 ... 86694
228 ... 79809, 81042
230 ... 85336
261 ... 80286
262 ... 85022, 86968, 86970
263 ... 85022, 86966, 86970
264 ... 86966, 86968, 86970
265 ... 86966, 86968, 86970
422 ... 82253
432 ... 82253
707 ... 82844

Proposed Rules:

Ch. 1 ... 85084
52 ... 79513, 79514, 79836, 80314-80316, 80556-80559, 81069, 81070, 81214, 81608, 81789, 81792, 81793, 82280, 82675-82678, 82964, 83546, 84096-84099, 85481, 86506
55 ... 79838
57 ... 85084
60 ... 83126, 85085, 85099, 86278
61 ... 83448, 83952, 84827
81 ... 81070, 82964, 85100
86 ... 82616
111 ... 84942
123 ... 80317-80319, 85101
162 ... 85800
180 ... 85101-85105
205 ... 86732
230 ... 85360
264 ... 82964
265 ... 82964
266 ... 80561
401 ... 79692, 81180, 82679
423 ... 81070
707 ... 79726
720 ... 81214, 81615
761 ... 80320, 84828

41 CFR

3-7 ... 84061
5-9 ... 81044
5-10 ... 81045
5A-9 ... 81044
5A-10 ... 81045
5-19 ... 82928
5A-19 ... 82928
5-26 ... 82932
5A-26 ... 82932
5B-10 ... 81045
29-70 ... 82828
60-1 ... 86216
60-2 ... 86216
60-4 ... 85750, 86216
60-20 ... 86216
60-30 ... 86216
60-50 ... 86216
60-60 ... 86216
60-250 ... 86216
60-741 ... 86216
101-20 ... 86493
101-35 ... 81202
101-36 ... 81202
101-37 ... 81202
101-40 ... 85751
109-40 ... 80287

Proposed Rules:

Ch. 51 ... 79516
29 ... 81160
29-1 ... 83548

29-15 ... 83998
60-1 ... 86206
60-250 ... 86206
60-741 ... 86206
60 ... 81160

42 CFR

110 ... 80531
405 ... 79453, 80827, 84061
435 ... 82254
436 ... 82254
Proposed Rules:
Ch. I ... 83816
Ch. II ... 83816
Ch. III ... 83816
Ch. IV ... 83816
36 ... 82840
51c ... 83554
56 ... 83566
65 ... 83579
405 ... 79658, 83579
420 ... 79658
431 ... 86850
435 ... 86850
436 ... 86850
455 ... 83772

43 CFR

14 ... 85376
35 ... 80258
428 ... 86495
3800 ... 82933
Proposed Rules:
4 ... 81074
14 ... 85106
1600 ... 82679
3100 ... 84390
3500 ... 84390
4100 ... 79516, 83580
5400 ... 84102
Public Land Orders:
706 (Revoked in part by PLO 5785) ... 80828
2409 (Revoked in part by PLO 5780) ... 80291
2555 (Amended by PLO 5784) ... 80827
3796 (Revoked by PLO 5796) ... 86495
5747 (Corrected in part by PLO 5782) ... 80291
5752 (Corrected in part by PLO 5789) ... 82934
5778 ... 80290
5779 ... 80290
5780 ... 80291
5781 ... 80291
5782 ... 80291
5783 ... 80291
5784 ... 80827
5785 ... 80828
5786 ... 80828
5787 ... 80828
5788 ... 82934
5789 ... 82934
5790 ... 85023
5791 ... 84788
5792 ... 85023
5793 ... 85023
5794 ... 85024
5795 ... 85024
5796 ... 86495

44 CFR

64 ... 79810, 82259-82261, 84789, 85024
65 ... 79455, 79456, 82263
67 ... 79466-79479, 79810, 82935, 84061, 84791
70 ... 82634-82652
Proposed Rules:
67 ... 82965-82971, 83272, 84103, 84104, 84829-84832, 85106-85110
205 ... 81215

45 CFR

801 ... 84798
1357 ... 86812
Proposed Rules:
Subtitle A ... 83172, 83816
Ch. II ... 83772
Ch. III ... 83772
Ch. XIII ... 83772
80 ... 82972
206 ... 82681
233 ... 82681, 86507
1020 ... 85485
1801 ... 81047
1226 ... 80840
1355 ... 85124, 86817
1356 ... 85124, 86817
1357 ... 85124, 86817
1612 ... 86511

46 CFR

31 ... 86692
54 ... 86692
93 ... 86692
167 ... 86692
183 ... 86692
310 ... 81567
Proposed Rules:
3 ... 84104
10 ... 80843
12 ... 83290
13 ... 83290
14 ... 84104
24 ... 84104
30 ... 83290
31 ... 83290
33 ... 81616
35 ... 83290
50 ... 85488
54 ... 85488
56 ... 85488
58 ... 85488
61 ... 85488
70 ... 83290
75 ... 81616
78 ... 81616
90 ... 83290
94 ... 81616
97 ... 81616
98 ... 83290
105 ... 83290
108 ... 81616
151 ... 83290
153 ... 83290
157 ... 83290
160 ... 81616
167 ... 81616
188 ... 84104
189 ... 84104
192 ... 81616
196 ... 81616
525 ... 84832

47 CFR

0 ... 84798, 85027
1 ... 79486
2 ... 83231
15 ... 81568, 83502, 83504
63 ... 82944
64 ... 81759, 82944
68 ... 79486
73 ... 81203, 84799-84802
90 ... 81204, 83231, 84802
97 ... 80106
Proposed Rules:
Ch. I ... 81619, 82280, 83580, 85125, 85491
2 ... 79516
13 ... 79518
22 ... 79516
67 ... 82281
73 ... 79516, 79841, 79842, 80561, 81078-81080, 81215, 81796, 81797, 82282, 82283, 82973, 82975, 84833-84835
76 ... 81217
97 ... 83592

48 CFR

Proposed Rules:
8 ... 79843
38 ... 79843

49 CFR

1 ... 83402
106 ... 81569
107 ... 81569
171 ... 80829, 81484, 81569
172 ... 81484, 81569
173 ... 81484, 81569
174 ... 81484, 81569
175 ... 81484, 81569
176 ... 81484, 81569
177 ... 81484, 81569
178 ... 81484, 81569
179 ... 81484
301 ... 81573
511 ... 81574
533 ... 81593
535 ... 83233
571 ... 82264, 85450
572 ... 82265
1000 ... 80292
1002 ... 86747, 86761, 86771
1003 ... 86771
1011 ... 84069, 86771
1033 ... 79487, 80292, 83236, 85454
1039 ... 85640
1042 ... 86741
1080 ... 86740
1100 ... 80109, 80110, 86771
1108 ... 79810
1109 ... 83237
1111 ... 79488, 79816, 84803
1128 ... 83506
1136 ... 86761
1137 ... 86747
1262 ... 81050
1300 ... 85029, 85640, 86740
1308 ... 86740
1331 ... 86736
Proposed Rules:
172 ... 80843, 82681, 83300, 84108
392 ... 81621
395 ... 82284, 82291
531 ... 84108
571 ... 81624, 81625, 82292, 84111
574 ... 82293
644 ... 79669
1039 ... 83300, 85133, 85641
1048 ... 82296
1051 ... 81799
1056 ... 82297, 83642
1090 ... 85133
1102 ... 81217
1109 ... 80150, 83302
1300 ... 83300, 85133, 85641, 86738
1301 ... 83300
1310 ... 81799

50 CFR

14 ... 86496
20 ... 80293
23 ... 80444, 83238
26 ... 80112, 83239, 85030
33 ... 80114, 80531, 81600, 82953, 83242, 85456, 85765
351 ... 85031
611 ... 81056, 82267, 84805, 86497
652 ... 82269
661 ... 79817
810 ... 80444
Proposed Rules:
12 ... 86511
17 ... 82474, 82480
20 ... 82975
29 ... 86512
32 ... 81081
285 ... 79844
410 ... 83412
611 ... 79846, 80845, 81633, 82297, 82682, 86518
643 ... 86518
671 ... 80847

AGENCY PUBLICATION ON ASSIGNED DAYS OF THE WEEK

The following agencies have agreed to publish all documents on two assigned days of the week (Monday/Thursday or Tuesday/Friday). This is a voluntary program. (See OFR NOTICE 41 FR 32914, August 6, 1976.)

Monday	Tuesday	Wednesday	Thursday	Friday
DOT/SECRETARY	USDA/ASCS		DOT/SECRETARY	USDA/ASCS
DOT/COAST GUARD	USDA/FNS		DOT/COAST GUARD	USDA/FNS
DOT/FAA	USDA/FSQS		DOT/FAA	USDA/FSQS
DOT/FHWA	USDA/REA		DOT/FHWA	USDA/REA
DOT/FRA	MSPB/OPM		DOT/FRA	MSPB/OPM
DOT/NHTSA	LABOR		DOT/NHTSA	LABOR
DOT/RSPA	HHS/FDA		DOT/RSPA	HHS/FDA
DOT/SLSDC			DOT/SLSDC	
DOT/UMTA			DOT/UMTA	
CSA			CSA	

Documents normally scheduled for publication on a day that will be a Federal holiday will be published the next work day following the holiday. Comments on this program are still invited. Comments should be submitted to the Day-of-the-Week Program Coordinator. Office of the Federal Register, National Archives and Records Service, General Services Administration, Washington, D.C. 20408

NOTE: As of September 2, 1980, documents from the Animal and Plant Health Inspection Service, Department of Agriculture, will no longer be assigned to the Tuesday/Friday publication schedule.

REMINDERS

The "reminders" below identify documents that appeared in issues of the **Federal Register** 15 days or more ago. Inclusion or exclusion from this list has no legal significance.

Rules Going Into Effect Today

COMMODITY FUTURES TRADING COMMISSION

79416 12-1-80 / Minimum financial and related reporting requirements

DEPOSITORY INSTITUTIONS DEREGULATION COMMITTEE

68644 10-16-80 / Maximum rate of interest payable on negotiable order of withdrawal accounts

68641 10-16-80 / Use of premiums, finders fees, and prepayment of interest by depository institutions

ENERGY DEPARTMENT

Federal Energy Regulatory Commission—

57708 8-29-80 / Electric utilities; discontinuing reporting requirements R0211. "Report of impending emergencies, load reductions, and/or service interruptions in bulk electric power supply and related power supply facilities"

[Originally published at 45 FR 38354, 6-9-80]

80817 12-8-80 / Revised alternative fuel price ceilings for the month of April 1980

ENVIROMENTAL PROTECTION AGENCY

79451 12-1-80 / Approval and promulgation of implementation plans; Ohio

FEDERAL DEPOSIT INSURANCE CORPORATION

79410 12-1-80 / Public access to application files

FEDERAL HOME LOAN BANK BOARD

66781 10-8-80 / Issuance of nationwide NOW accounts and overdraft authority

72631 11-3-80 / NOW Accounts, Give-aways, return on savings accounts and finders fee; interest rates

73466 11-5-80 / NOW account forms; requirements for Federal and other FSLIC-insured institutions

GENERAL SERVICES ADMINISTRATION

81045 12-9-80 / Bonds and insurance policies and procedures; transfer of provisions

76438 11-19-80 / Federal, State, and local taxes; transfer policies and procedures

HEALTH AND HUMAN SERVICES DEPARTMENT

Health Care Financing Administration—

79453 12-1-80 / Collection of unpaid Medicare premiums

Rules Going Into Effect Thursday, January 1, 1981

AGRICULTURE DEPARTMENT

Agricultural Marketing Service—

81529 12-11-80 / Perishable Agricultural Commodities Act of 1930; increase in license fees

78619 11-26-80 / Cherries grown in Michigan, New York, Wisconsin, Pennsylvania, Ohio, Virginia, West Virginia, and Maryland; revision of interest rate

Food and Nutrition Service—

79741 12-2-80 / Food stamp program: Standard deductions, dependent care/excess shelter expense deductions and thrifty food plan amounts for the 48 states and the District of Columbia, Alaska, Hawaii, Guam, the Virgin Islands, and Puerto Rico

64068 9-26-80 / School lunch program and State administrative expense funds; assessment, improvement and monitoring system

Food Safety and Quality Service—

76965 11-21-80 / Processing operations at official establishments, change in reporting frequency from weekly to quarterly

CIVIL AERONAUTICS BOARD

79750 12-2-80 / Automatic market entry procedures for first and second round applications

48867 7-22-80 / Elimination of certain reporting requirements and changes in monthly financial reporting for certificated carriers; amendment of statistical reporting requirements for small carriers and new entrants

67656 10-14-80 / Passenger origin-destination survey

COMMERCE DEPARTMENT

International Trade Administration—

79025 11-28-80 / Certain fish from Canada; revocation of countervailing duty orders

National Oceanic and Atmospheric Administration—

82267 12-15-80 / Permit application fees

COMMODITY FUTURES TRADING COMMISSION

79753 12-2-80 / Commodity Futures transactions; records requirements

ENERGY DEPARTMENT

Federal Energy Regulatory Commission—

76664 11-20-80 / Sales of natural gas; intrastate gas

FEDERAL COMMUNICATIONS COMMISSION

59880 9-11-80 / System of temporary licensing for multiple licensed mobile relay systems operating in the Business Radio Service

FEDERAL DEPOSIT INSURANCE CORPORATION

77411 11-24-80 / Employee responsibilities and conduct; maintenance of credit cards by bank examiners

67627 11-27-79 / Securities of insured state nonmember banks; proxy statements, reports and other matters

FEDERAL HOME LOAN BANK BOARD

82162 12-15-80 / Trust powers of Federal savings and loans associations

HEALTH, EDUCATION, AND WELFARE DEPARTMENT

Health Care Financing Administration—

29420 5-18-79 / Medicaid, State child health screening programs; effective for § 441.56(a)(3)

Social Security Administration—

37604 6-28-79 / Federal old-age, survivors, and disability insurance (1950-....); coverage of employees of State and local governments; annual wage reporting

72110 10-31-80 / Requirements for coverage of employees of state and local governments

[Corrected at 45 FR 78633, 11-26-80]

HOUSING AND URBAN DEVELOPMENT DEPARTMENT

Federal Housing Commissioner, Office of Assistant Secretary for Housing—

54198 8-14-80 / Housing programs; previous participation review and clearance procedures

Interstate Land Sales Registration Office—

40474 6-13-80 / Land registration, purchaser's revocation rights, sales practices and standards, and formal procedures and rules of practice

INTERIOR DEPARTMENT

Indian Affairs Bureau—

81560 12-11-80 / San Carlos Indian Irrigation Project, Arizona; Revision of power rates

Land Management Bureau—

74722 11-12-80 / Modification of certain withdrawals: Arizona, California, Colorado, Idaho, Montana, Nevada, New Mexico, Utah, Wyoming

78902 11-26-80 / Surface management of public lands under U.S. mining laws

[Corrected at 45 FR 82933, 12-17-80]

NUCLEAR REGULATORY COMMISSION

38340 6-9-80 / New requirements for labeling of gas and aerosol detectors, including smoke detectors, and labeling the point-of-sale packaging for these detectors

PENSION BENEFIT GUARANTY CORPORATION

82172 12-15-80 / Valuation of plan benefits; amendment adopting additional PBGC rates

81728 12-12-80 / Federal Employees Health Benefits Program; amendments concerning benefits for medically underserved areas

POSTAL SERVICE

82925 12-17-80 / International express mail rates to Argentina

SECURITIES AND EXCHANGE COMMISSION

73906 11-7-80 / Amendment of requirements applicable to filing by self-regulatory organizations of proposal rule changes and certain other materials

79425 12-1-80 / Self-regulatory organizations; record retention, production, and destruction; requirements extended to registered clearing agencies and Municipal Securities Rulemaking Board

76982 11-21-80 / Uniform and integrated reporting requirements: Management remuneration; final amendments

TRANSPORTATION DEPARTMENT

Coast Guard—

77434 11-24-80 / Casualty reporting requirements for deepwater ports and diving

77439 11-24-80 / Casualty reporting requirements for vessels

82248 12-15-80 / Design and equipment standards for tank vessels transferring Outer Continental Shelf oil

45269 7-3-80 / Equipment requirements for boat operators; acceptance of hand red flares as visual distress signals [Corrected at 45 FR 54042, 8-14-80]

73021 12-17-79 / Visual distress signal requirements

Federal Aviation Administration—

71919 10-30-80 / Limited IFR operations of rotorcraft

Federal Highway Administration—

25456 5-1-79 / Motor carriers and motor vehicles; parts and accessories necessary for safe operation to resolve inconsistencies between Federal safety standards

[Corrected at 44 FR 31981, 6-4-79]

Federal Railroad Administration—

72664 11-3-80 / Accident/incidents reports; biennial adjustment of reporting threshold

National Highway Traffic Safety Administration—

72131 12-13-79 / Child restraint systems; seat belt assemblies and anchorages

[Effective date changed at 45 FR 29045, 5-1-80]

Research and Special Programs Administration—

80829 12-8-80 / Change in mailing address for hazardous materials incident report

73682 11-6-80 / Elimination of certain reporting requirements

Deadlines for Comments on Proposed Rules for the Week of January 4 Through January 10, 1980

ACTION

80840 12-8-80 / Prohibitions on electoral and lobbying activities; comments by 1-7-81

AGRICULTURE DEPARTMENT

Animal and Plant Health Inspection Service—

73079 11-4-80 / Revision of tetanus toxoid potency test; comments by 1-5-81

Food Safety and Quality Service—

73947 11-7-80 / Accredited laboratory program for meat and poultry products inspection; comments by 1-6-81

71365 10-28-80 / Net weight labeling; meat and poultry; comments by 1-5-81

[Originally published at 45 FR 53002, 8-8-80]

Soil Conservation Service—

81210 12-10-80 / Great Plains Conservation Program, evaluation; comments by 1-5-81

CIVIL AERONAUTICS BOARD

73087 11-4-80 / Classification and exemption of air taxi operators; dual authority; comments by 1-5-81

73092 11-4-80 / Rules of conduct in Board proceedings; comments by 1-5-81

DEFENSE DEPARTMENT

Office of the Secretary—

81213 12-10-80 / Education assistance eligibility, character of discharge; comments by 1-7-81

EDUCATION DEPARTMENT

73963 11-7-80 / Provisions for election to local advisory committees of oveseas dependents' schools; comments by 1-6-81

ENERGY DEPARTMENT

Conservation and Solar Energy Office—

73684 11-6-80 / Electric and hybrid vehicle research, development, and demonstration program; equivalent petroleum-based fuel economy calculation; comments by 1-5-81

71746 10-29-80 / Price support loans for municipal waste energy projects; comments by 1-5-81

Federal Energy Regulatory Commission—

80125 12-3-80 / Natural Gas Policy Act of 1978; alternative fuel price ceilings for incremental pricing; comment period extended to 1-9-81

[Originally published at 45 FR 74505, 11-10-80]

81211 12-10-80 / Natural Gas Policy Act of 1978; alternative fuel price ceilings for incremental pricing; comments by 1-9-81

[*See also* 45 FR 74505, 11-10-80]

81063 12-9-80 / Procedures for jurisdictional agencies to submit recommendations of areas for designation as tight formations; comments by 1-5-81

ENVIRONMENTAL PROTECTION AGENCY

73696 11-6-80 / California State implementation plan revision: Amador, El Dorado, Nevada, Placer, and Tuolumne Counties; comments by 1-5-81

73971 11-7-80 / Consideration of approval of revision to New Jersey State Implementation Plan; comments by 1-6-81

81069 12-9-80 / Consideration of deadlines for revision of Illinois State Implementation plan; comments by 1-8-81

73967 11-7-80 / Consideration of revisions to California State Implementation Plan; comments by 1-6-81

73702 11-6-80 / Designation of areas for air quality planning purposes; State of Iowa; comments by 1-5-81

80558 12-5-80 / Idaho Implementation Plan; proposed revision; comments by 1-5-81

80314 12-4-80 / Implementation plans; North Carolina: air quality surveillance plan; comments by 1-5-81

80315 12-4-80 / Implementation plans; North Carolina: approval of plan revisions; comments by 1-5-81

80319 12-4-80 / Maine application for interim authorization, phase I, hazardous waste management program; comments by 1-10-81

80559 12-5-80 / Oregon Implementation Plan, proposed revision; comments by 1-5-81

66726 10-7-80 / Zone-depleting Chlorofluorocarbons; proposed production restriction; comments by 1-5-81

79117 11-28-80 / South Carolina's application for interim authorization, phase I, hazardous waste management program; comments by 1-6-81

73696 11-6-80 / State Implementation Plans; approval of 1982 ozone and carbon monoxide plan revisions for areas needing an attainment date extension; comments by 1-5-81

79118 11-28-80 / Tennessee's application for interim authorization, phase I, hazardous waste management program; comments by 1-5-81

FEDERAL COMMUNICATIONS COMMISSION

81797 12-12-80 / AM stereo broadcasting proceeding; comments by 1-9-81

[Originally published at 45 FR 59350, 9-9-80]

59350 9-9-80 / AM stereophonic broadcasting; reply comments by 1-8-81

63011 9-23-80 / Cable television systems and divestiture requirement; comments by 1-8-81

[Comment period extended at 45 FR 81217, 12-10-80]

71628 10-20-80 / Changes in the corporate structure and operations of COMSAT; reply comments by 1-9-81

79842 12-2-80 / FM broadcast station in Santa Barbara, Calif.; reply comments period extended to 1-5-81

[*See also* 45 FR 28770, 4-11-80]

71393 10-28-80 / FM broadcast station in South Lake Tahoe, Calif., table of assignments; reply comments by 1-9-81

55491 8-20-80 / FM quadraphonic broadcasting; reply comments by 1-9-81

70023 10-22-80 / Improvements to UHF television reception; comments by 1-5-81

79518 12-1-80 / Inquiry relating to the Commission's radio operator licensing program; reply comments extended to 1-5-81

[Originally published at 45 FR 54778, 8-18-80]

65639 10-3-80 / Maritime radio services; public coast stations operating on frequencies below 27,500 kHz, establishment limitation removed; reply comments by 1-9-81

79516 12-1-80 / Radio broadcast services TV channels 5 and 6 and FM channels 251-300 in the State of Hawaii; reply comments by 1-9-81

74946 11-13-80 / TV broadcast station in East St. Louis, Ill.; changes in table of assignments; reply comments by 1-4-81

70921 10-27-80 / TV broadcast station in Victoria, Tex., changes in table of assignments; reply comments by 1-4-81

HEALTH AND HUMAN SERVICES DEPARTMENT

Food and Drug Administration—

73092 11-4-80 / Canned sardines and sardine-type products; establishment of standards; comments by 1-5-81

59540 9-9-80 / Establishment of conditions under which over-the-counter (OTC) anthelmintic drugs products, which destroy pinworms, are generally recognized as safe and effective and not misbranded; reply comments by 1-7-81

[Corrected at 45 FR 65609, 10-3-80]

71366 10-28-80 / Food labeling; net weight labeling requirements; comments by 1-5-81

[Originally published at 45 FR 53023, 8-8-80]

73095 11-4-80 / Frozen lobsters, rock lobsters, spiny lobsters and slipper lobsters; establishment of standards; comments by 1-5-81

74374 11-7-80 / Intent to amend performance standards for laser products; comments by 1-6-81

74158 11-7-80 / Restrictions on sale, use and distribution of alpha-fetoprotein test kits; comments by 1-6-81

Public Health Service—

76497 11-19-80 / Indian health; revision of regulations; comments by 1-5-81

Health Care Financing Administration—

74174 11-7-80 / Clinical laboratories: quality control standards for alpha-fetoprotein test kits; comments by 1-6-81

HOUSING AND URBAN DEVELOPMENT DEPARTMENT

Office of the Secretary—

73454 11-4-80 / Nondiscrimination rules on basis of age in programs or activities receiving Federal financial assistance from HUD; comments by 1-5-81

INTERIOR DEPARTMENT

Fish and Wildlife Service—

81081 12-9-80 / Proposed addition of national wildlife refuges to the list of open areas for migratory bird hunting, upland game hunting and big game hunting; comments by 1-8-81

66410 10-6-80 / Proposed threatened status for the Madison Cave Isopod; comments by 1-5-81

Land Management Bureau—

83580 12-19-80 / Grazing regulations amendments; comments by 1-9-81

Surface Mining and Reclamation Enforcement Office—

81526 12-10-80 / Coal processing waste banks performance standards; comments by 1-10-81

83544 12-19-80 / West Virginia Permanent Regulatory Program (resubmitted); comments by 1-6-81

INTERSTATE COMMERCE COMMISSION

76718 11-20-80 / Railroad cost accounting system compliance with uniform system of accounts; comments by 1-5-81

81217 12-10-80 / Railroad cost recovery index, general rate increases; comments by 1-9-81

NATIONAL AERONAUTICS AND SPACE ADMINISTRATION

74499 11-10-80 / Space transportation system, insurance and indemnification of NASA space vehicle users; comments by 1-9-81

NUCLEAR REGULATORY COMMISSION

73080 11-4-80 / Electric Utilities; petition for rulemaking published; comments by 1-5-81

PANAMA CANAL COMMISSION

80313 12-4-80 / Order of passage of vessels through the Panama Canal; comments by 1-5-81

POSTAL SERVICE

79104 11-28-80 / Proposed expansion of ZIP Code system by adding a hyphen and four new numbers; comments by 1-5-81

RAILROAD RETIREMENT BOARD

74510 11-10-80 / Statutory lien where sickness benefits paid; comments by 1-9-81

SECURITIES AND EXCHANGE COMMISSION

69479 10-21-80 / Individualized investment management services; comments by 1-9-81

TRANSPORTATION DEPARTMENT

Federal Aviation Administration—

80460 12-4-80 / Commuter pilot-in-command operating experience requirements and extension of compliance date for instrument rating requirement; comments by 1-5-81

67283 10-9-80 / Flight crewmember flight and duty time limitations and rest requirements; reply comments period extended to 1-10-81

[*See also* 44 FR 53316, 8-11-80]

67103 10-9-80 / Joint petition for rulemaking by Transamerica Airlines, Inc. and World Airways, Inc. to allow certificate holders' operations to be conducted under a flight operations control system; comments by 1-7-81

73688 11-6-80 / Petitions for rulemaking, summary of petitions received and dispositions of petitions denied; comments by 1-6-81

TREASURY DEPARTMENT

Alcohol, Tobacco and Firearms Bureau—

73692 11-6-80 / Finger Lakes Viticultural Area, establishment; comments by 1-5-81

73692 11-6-80 / "Tied-house" regulations, credit to retailers in arrears; comments by 1-5-81

Internal Revenue Service—

73512 11-5-80 / Crude oil windfall tax; tax deposits and refunds based on the net income limitation; comments by 1-5-81

VETERANS ADMINISTRATION

81213 12-10-80 / Educational assistance eligiblity, character of discharge; comments by 1-7-81

81787 12-12-80 / Government-furnished headstones or markers; increase in payment; comments by 1-9-81

81068 12-9-80 / Payment of educational assistance allowance to participants in the Veterans' Educational Assistance Program on active duty; comments by 1-7-81

Deadlines for Comments On Proposed Rules for the Week of January 11 Through January 17, 1981

AGRICULTURE DEPARTMENT

Agricultural Marketing Service—

75218 11-14-80 / Official Standards of the U.S. for the grades of sea island cotton and tentative standards for the preparation of long-staple cotton; comments by 1-15-81

Agricultural Stabilization and Conservation Service—

77035 11-21-80 / 1981 National Marketing quotas for burley tobacco; comments by 1-16-81

[Comments closing date corrected at 45 FR 79078, 11-28-80]

75219 11-14-80 / Proposed determinations of marketing quotas for the 1981-82, 1982-83 and 1983-84 marketing years for fire-cured, dark air-cured, virginia sun-cured, cigar-binder, and cigar-filler and binder tobacco, comments by 1-13-81

Food and Nutrition Service—

74725 11-12-80 / Food Stamp Program; criteria for authorizing wholesalers; comments by 1-12-81

COMMERCE DEPARTMENT

National Oceanic and Atmospheric Administration—

77038 11-21-80 / Licensing of ocean thermal energy conversion facilities and plantships; comments by 1-16-81

DEFENSE DEPARTMENT

Defense Investigative Service—

82960 12-17-80 / Financial privacy; policies and procedures for obtaining information from financial institutions; comments by 1-16-81

ENVIRONMENTAL PROTECTION AGENCY

82964 12-17-80 / Air quality implementation plan, New Mexico; variance for Phelps Dodge Corp., Playas, N. Mex.; comments by 1-16-81

81789 12-12-80 / Colorado nonattainment area plans; comments by 1-12-81

76906 11-20-80 / Guideline for Federal procurement of cement and concrete containing fly ash; comments by 1-15-81

76076 11-17-80 / Hazardous waste management system; wastewater treatment tanks, neutralization tanks, containers, transport vehicles, etc.; comments by 1-16-81

80318 12-4-80 / Maryland application for interim authorization, phase 1; hazardous waste management program; comments by 1-15-81

75241 11-14-80 / Ocean dumping, proposed designation of sites; comments by 1-13-81

81792 12-12-80 / Ohio State Implementation Plan for sulfur dioxide; coments by 1-12-81

80317 12-4-80 / Pennslyvania application for interim authorization, phase 1; hazardous waste management program; comments by 1-13-81

81608 12-11-80 / Proposed revision of the State Implementation Plan for Kansas; comments by 1-12-81

[Corrected at 45 FR 84099, 12-22-80]

82675 12-16-80 / Proposed removal of revisions to Massachusetts State Implementation; comments by 1-15-81

81608 12-11-80 / Proposed revision of the State Implementation Plan for Kansas; comments by 1-12-81

78970 1-26-80 / Toxic substances; significant new uses; comments by 1-12-81

82678 12-16-80 / Receipt of request from State of New York to revise its State Implementation Plan; comments by 1-15-81

81793 12-12-80 / West Virginia State Implementation Plan; proposed revision; comments by 1-12-81

FEDERAL COMMUNICATIONS COMMISSION

46121 7-9-80 / American Telephone and Telegraph Co.; longterm cost allocation procedures; comments by 1-11-81

79841 12-2-80 / FM broadcast station in Ainsworth, Nebr.; proposed changes in table of assignments; comments by 1-13-81

78189 11-25-80 / FM broadcast station in Spirit Lake, Iowa; proposed changes in table of assignments; comments by 1-13-81

78190 11-25-80 / FM broadcast station in Wiggins, Miss.; proposed changes in table of assignments; comments by 1-13-80

68178 10-17-80 / Inquiry into the future role of low-power television broadcasting and television translators in the National Telecommunications System; comments by 1-15-81

74523 11-10-80 / MTS and WATS market structure; interstate telecommunications services; Alaska submarket, reply comments extended to 1-14-81

82280 12-15-80 / Overseas Communications Services; Comments extended to 1-16-81

[Originally published at 45 FR 82280, 11-19-80]

73718 11-6-80 / TV broadcast station in Sierra Vista, Ariz., proposed changes in table of assignments; reply comments by 1-12-81

FEDERAL TRADE COMMISSION

85076 12-24-80 / Credit practices; comments extended to 1-16-81

[*See also* 45 FR 56070, 8-22-80]

HEALTH AND HUMAN SERVICES DEPARTMENT

Food and Drug Administration—

69128 10-17-80 / Establishment of a monograph for ingrown toenail relief drug products for over-the-counter human use; comments by 1-14-81

69122 11-17-80 / Establishment of monograph for nailbiting and thumbsucking deterrent drug products for over-the-counter human use; comments by 1-14-81

75229 11-14-80 / General biological products standards; pyrogen test requirements; comments by 1-13-81

75226 11-14-80 / Provisionally listed color additives; Proposal to postpone the closing date for the provisional list of certain color additives; comments by 1-13-81

79093 11-28-80 / Restricted devices; comments period extended to 1-16-81

[*See also* 45 FR 65619, 10-3-80]

81734 12-12-80 / Stabilizers and emulsifiers in lowfat and skim milk; consumer interest regulations; objections by 1-12-81

HOUSING AND URBAN DEVELOPMENT DEPARTMENT

Community Planning and Development, Office of the Assistant Secretary—

74940 11-13-80 / Community Development Block Grants; community development disaster assistance program; comments by 1-12-81

INTERIOR DEPARTMENT

Fish and Wildlife Service—

82975 12-17-80 / Migratory bird hunting annual regulations, special procedures; comments by 1-16-81

68975 10-17-80 / Proposed endangered status and antical habitat for the Kentucky cave shrimp; comments by 1-15-81

Indian Affairs Bureau—

82667 12-16-80 / Attorney contracts with Indian tribes; Payments of tribal attorney fees with appropriated funds; comments by 1-15-81

[Corrected at 45 FR 84088, 12-22-80]

81781 12-12-80 / Grants under Indian Child Welfare Act; comments by 1-12-81

Mines Bureau—

82669 12-16-80 / Revision of provisions for purchases of helium by Federal agencies; comments by 1-15-81

National Park Service—

82278 12-15-80 / Gulf Islands National Seashore; Off-road vehciles; comments by 1-14-81

INTERNATIONAL TRADE COMMISSION

82957 12-17-80 / Ethics rules, proposed amendments; comments by 1-15-81

INTERSTATE COMMERCE COMMISSION

85133 12-24-80 / Improvement of trailer on flatcar and container on flatcar service regulations; comments by 1-12-81

LABOR DEPARTMENT

Employment and Training Administration—

81768 12-12-80 / Grant awards; migrant and other seasonally employed farmworkers program under Comprehensive Employment and Training Act; comments by 1-12-81

Office of the Secretary—

81785 12-12-80 / Labor standards for Federal service contracts; comments by 1-12-81

NUCLEAR REGULATORY COMMISSION

75536 11-14-80 / Fracture toughness requirements for nuclear power reactors; comments by 1-13-81

[Corrected at 45 FR 77450, 11-24-80]

79820 12-2-80 / Intent to prepare environmental impact statement for reactor siting criteria; comments by 1-16-81

79492 12-1-80 / Searches of individuals at Power Reactor facilities; comments by 1-15-81

POSTAL SERVICE

81787 12-12-80 / Enclosures with special fourth-class matter; amendments to Domestic Mail Manual; comments by 1-11-81

RAILROAD RETIREMENT BOARD

78704 11-26-80 / Annuities under the Railroad Retirement Act; comments by 1-12-81

SECURITIES AND EXCHANGE COMMISSION

70890 10-27-80 / Equity securities; purchases by issuer and others; comments by 1-15-81

83259 12-18-80 / Exemption from registration of interests and participations in certain H.R. 10 plans; comments by 1-14-81

69911 10-22-80 / Net capital requirement for brokers and dealers; comments by 1-15-81

69915 10-22-80 / Net capital requirements for brokers and dealers; comments by 1-15-81

69909 10-22-80 / Proposed comprehensive revision to system for registration of securities offerings; comments by 1-15-81

STATE DEPARTMENT

75687 11-17-80 / International agreements, coordination and reporting; comments by 1-16-81

Consular Affairs Bureau—

81778 12-12-80 / Change in fees for consular services; comments by 1-12-81

Office of the Legal Adviser—

75687 11-17-80 / Coordinating and reporting of international agreements; comments by 1-16-81

[Corrected at 45 FR 81666, December 11, 1980]

TRANSPORTATION DEPARTMENT

Coast Guard—

77439 11-24-80 / Casualty reporting requirements for vessels; comments by 1-15-81

81607 12-11-80 / Drawbridge operation regulations; Skull Creek, S.C.; comments by 1-12-81

Federal Aviation Administration—

75138 11-13-80 / Air carrier; carry-on baggage; accessible storage of flexible travel canes carried by blind passengers; comments by 1-12-81

TREASURY DEPARTMENT

Alcohol, Tobacco, and Firearms Bureau—

74942 11-13-80 / Multivantage dates under the labeling and advertising regulations for wine under the Federal Alcohol Administration Act; comments by 1-12-81

Internal Revenue Service—

75695 11-17-80 / Foreign oil and gas taxes; limitation on foreign tax credit; comments by 1-16-81

75695 11-17-80 / Foreign taxes, credibility; comments by 1-16-81

75709 11-17-80 / Limited liability companies, classification, comments by 1-16-81

75692 11-17-80 / Oil and gas not considered taxes; payments to foreign counties; comments by 1-16-81

75231 11-14-80 / Windfall profit tax; Clarification of rules relating to base prices of Tier 2 and Tier 3 oil; comments by 1-13-81

WATER RESOURCES COUNCIL

76701 11-20-80 / Protection and management of historic and cultural environment; comments by 1-12-81

Next Week's Meetings:

AGRICULTURE DEPARTMENT

80852 12-8-80 / Written contracts for the motor transportation of exempt agricultural commodities, Newark, N.J. (open), 1-5-81

ARTS AND HUMANITIES, NATIONAL FOUNDATION

79204 11-28-80 / Humanities Panel, Washington, D.C. (closed), 1-8-81

81133 12-9-80 / Humanities Panel, Washington, D.C. (closed), 1-6-81

81904 12-12-80 / Humanities Panel, Washington, D.C. (closed), 1-5 and 1-6, 1-8 and 1-9-81

83068 12-17-80 / National Council on the Arts, Media Arts Panel (Film/Video Production), Washington, D.C (closed), 1-5 through 1-7-81

83068 12-17-80 / National Council on the Arts, Special Projects Panel (Inter-Arts Program), Washington, D.C. (partially open), 1-5 and 1-6-81

CIVIL RIGHTS COMMISSION

82687 12-16-80 / New Jersey Committee press conference on domestic violence, Newark, N.J. (open) 1-8-81

COMMERCE DEPARTMENT

National Oceanic and Atmospheric Administration—

81803 12-12-80 / Gulf of Mexico Fishery Management Council, Metairie, La. (open), 1-7-81

81249 12-10-80 / Mid-Atlantic Fishery Management Council, Surf Clam/Ocean Quahog Resources Subpanel, Dover, Del. (open), 1-9-81

81249 12-10-80 / Mid-Atlantic Fishery Management Council, Scientific and Statistical Committee, Philadelphia, Pa. (open), 1-7-81

81249 12-10-80 / North Pacific Fishery Management Council, Scientific and Statistical Committee, Advisory Panel, and Alaska Board of Fisheries, Seatle, Wash. (open), 1-5 and 1-6-81

[Changed at 45 FR 84115, 12-22-80]

Office of the Secretary—

84841 12-23-80 / Commerce Technical Advisory Board, Washington, D.C., 1-6-81

DEFENSE DEPARTMENT

Army Department—

82986 12-17-80 / Army Science Board, Washington, D.C. (open), 1-8 and 1-9-81

Office of the Secretary—

78194 11-25-80 / Wage Committee, Washington, D.C. (partially open), 1-6-81

EDUCATION DEPARTMENT

National Advisory Council on Indian Education—

81645 12-11-80 / Meeting, Washington, D.C. (open), 1-9 and 1-10-81

ENERGY DEPARTMENT

84844 12-23-80 / Radioactive Waste Management State Planning Council, Phoenix, Ariz. (open), 1-8 and 1-9-81

Energy Research Office—

84138 12-22-80 / Energy Research Advisory Board, Direct Heat Subpanel, Burlingame, Calif. (open), 1-9-81

Federal Energy Regulatory Commission—

81211 12-10-80 / Natural Gas Policy Act of 1978; alternative fuel price ceilings for incremental pricing, Washington, D.C., 1-6-81

[*See also* 45 FR 74505, 11-10-80]

80125 12-3-80 / Natural Gas Policy Act 1978; alternative fuel price ceilings for incremental pricing; informal technical conference, Washington, D.C., 1-6-81

[*See also* 45 FR 74505, 11-10-80]

ETHICAL PROBLEMS IN MEDICINE AND BIOMEDICAL AND BEHAVIORAL RESEARCH, PRESIDENT'S COMMISSION FOR THE STUDY OF

81907 12-12-80 / Compensation of subjects injured in research, et al., Washington, D.C. (open), 1-9 and 1-10-81

FEDERAL COMMUNICATIONS COMMISSION

80902 12-8-80 / Radio Broadcasting Advisory Committee, Technical and Allocations Subgroups, Washington, D.C. (open), 1-6-81

83328 12-18-80 / Radio Technical Commission for Marine Services, Washington, D.C. (open), 1-7-81

HEALTH AND HUMAN SERVICES DEPARTMENT

Alcohol, Drug Abuse, and Mental Health Administration—

85158 12-24-80 / Community Alcoholism Services Review Committee, Bethesda, Md. (partially open), 1-10 and 1-11-81

Centers for Disease Control—

83330 12-18-80 / Alpha-Fetoprotein Work Group, Atlanta, Ga. (open), 1-8 and 1-9-81

80906 12-8-80 / Work Group on Tuberculosis Therapy, Atlanta, Ga. (open), 1-8 and 1-9-81

[Date corrected at 45 FR 81282, 12-10-80 and at 45 FR 83331, 12-18-80]

Human Development Services Office—

84153 12-22-80 / White House Conference on Aging, Technical Committee on Age—Intergrated Society: Implications for Governmental Structure, Washington, D.C. (open), 1-8-81

National Institutes of Health—

79386 11-28-80 / Recombinant DNA Advisory Committee, Bethesda, Md. (partially open), 1-8-81

80357 12-4-80 / Recombinant DNA Advisory Committee, Working Group, Bethesda, Md. (open), 1-7-81

Office of the Secretary—

83172 12-17-80 / Adoption Assistance and Child Welfare Act of 1980, implementation; demonstration project assisting those wishing to comment on proposed regulations: Boston, Mass., 1-9-81, and Atlanta, Ga., 1-9-81 (both sessions open)

Public Health Service—

85159 12-24-80 / Health Care Technology National Council, Criteria Subcommittee, New York, N.Y. (open), 1-9-81

INTERGOVERNMENTAL RELATIONS ADVISORY COMMISSION

83677 12-19-80 / Grants policymaking meeting, Chicago, Ill. (open), 1-8 and 1-9-81

INTERIOR DEPARTMENT

Fish and Wildlife Service—

82474 12-15-80 / Chihuahua Chub, Silver City, N. Mex. (open), 1-6-81

Land Management Bureau—

81890 12-12-80 / Carson City District Multiple Use Advisory Council, Carson City, Nev. (open), 1-9-81

83332 12-18-80 / Minnesota Land Use Planning, Fergus Falls, Minn. (open), 1-6-81

83332 12-18-80 / Minnesota Land Use Planning, International Falls, Minn. (open), 1-5-81

83332 12-18-80 / Minnesota Land Use Planning, St. Paul, Minn. (open), 1-8-81

81672 12-11-80 / Multiple Use Advisory Council, Ely, Nev. (open), 1-6-81

79172 11-28-80 / Phoenix District Multiple Use Advisory Council, Phoenix, Ariz. (open), 1-9-81

82366 12-15-80 / Rock Springs District Advisory Council, Rock Springs, Wyo. (open), 1-8-81

81129 12-9-80 / Arizona Ship District Multiple Use Advisory Council, St. George, Utah (open), 1-8-81

83332 12-18-80 / Minnesota Land Use Planning, Brainerd, Minn. (open), 1-7-81

81129 12-9-80 / Multiple Use Advisory Council, Moab, Utah (open), 1-9-81

81673 12-11-80 / Salt Lake District Office, Utah; Preparation of Box Elder County Resource Management Plan, Brigham City, Utah (open), 1-6-81

80190 12-3-80 / Yuma District Multiple Use Advisory Council, Yuma, Ariz. (open), 1-8 and 1-9-81

[*See also* 45 FR 73807, 11-6-80]

National Park Service—

81892 12-12-80 / Santa Monica Mountains National Recreation Area Advisory Commission, Ventura, Calif. (open), 1-6-81

Office of the Secretary—

21273 12-10-80 / Regional Oil Shale Coal Team, Denver, Colo. (open), 1-6-81

INTERSTATE COMMERCE COMMISSION

80853 12-8-80 / Written contracts for the motor transportation of exempt agricultural commodities, Newark, N.J. (open), 1-5-81

NATIONAL SCIENCE FOUNDATION

83069 12-17-80 / Social and Economic Science Advisory Committee, Executive Committee, Washington, D.C. (closed), 1-9 and 1-10-81

NUCLEAR REGULATORY COMMISSION

79955 12-2-80 / Screening Committee for Technical Vacancies on the Atomic Safety and Licensing Board Panel (closed), 1-6-81

84181 12-22-80 / Reactor Safeguards Advisory Committee, Washington, D.C. (partially open), 1-8 through 1-10-81

84183 12-22-80 / Reactor Safeguards Advisory Committee, Metal Components Subcommittee, Washington, D.C. (open), 1-7-81

84185 12-22-80 / Reactor Safeguards Advisory Committee, NRC Safety Research Program Subcommittee, Washington, D.C. (open), 1-7-81

84183 12-22-80 / Reactor Safeguards Advisory Committee, Regulatory Activities Subcommittee, Washington, D.C. (open), 1-6-81

84184 12-22-80 / Reactor Safeguards Advisory Committee, Safety Philosophy, Technology and Criteria Subcommittee, Washington, D.C. (open), 1-6-81

84184 12-22-80 / Reactor Safeguards Advisory Committee, Sequoyah Nuclear Plant Subcommittee, Washington, D.C. (open), 1-6-81

79955 12-2-80 / Screening Committee for Lawyer Vacancies on the Atomic Safety and Licensing Board, Bethesda, Md. (closed), 1-7-81

SOCIAL SECURITY NATIONAL COMMISSION

83734 12-19-80 / Meeting to discuss drafts for final report, Washington, D.C. (open), 1-6 and 1-7-81

TRANSPORTATION DEPARTMENT

Federal Aviation Administration—

83375 12-18-80 / Alternative Separation Concepts, Atlantic City, N.J. (open), 1-7-81

75040 11-13-80 / Alternative Strategies for the Implementation of Microwave Landing Systems, El Segundo, Calif., 1-5-81; Denver, Colo., 1-7-81; Rosemont, Ill., 1-9-81 (all sessions open)

National Highway Traffic Safety Administration—

84195 12-22-80 / Biomechanics Advisory Committee, Washington, D.C. (open), 1-8-81

TREASURY DEPARTMENT

Comptroller of the Currency—

80948 12-8-80 / Fair housing lending enforcement, Washington D.C. (open), 1-7-81

VETERANS ADMINISTRATION

82785 12-16-80 / Wage Committee, Washington, D.C. (closed), 1-8-81

Next Week's Public Hearings

COMMERCE DEPARTMENT

National Oceanic and Atmospheric Administration—

77038 11-21-80 / Licensing of ocean thermal energy conversion facilities and plantships, Washington, D.C., 1-7-81

Office of the Secretary—

83306 12-18-80 / National Voluntary Laboratory Accreditation Program; acoustical testing services; Washington, D.C., 1-9-81

ENERGY DEPARTMENT

Economic Regulatory Administration—

84920 12-23-80 / Amendments to propane pricing regulations, Washington, D.C., 1-7-81

Western Area Power Administration—

80349 12-4-80 / Compliance with Title II of the Public Utility Regulatory Policies Act, Denver, Colo., 1-6-81

ENVIRONMENTAL PROTECTION AGENCY

78980 11-26-80 / Beverage can surface coating industry, Research Triangle Park, N.C., 1-6-81

76906 11-20-80 / Guideline for Federal procurement of cement and concrete containing fly ash, Washington, D.C., 1-8-81

80316 12-4-80 / Intent to promulgate a maintenance of pay provision as part of the Idaho State Implementation Plan, Kellogg, Idaho, 1-6-81

80319 12-4-80 / Maine application for interim authorization, phase 1, hazardous waste management program, Portland, Maine, 1-5-81

80318 12-4-80 / Maryland application for interim authorization, phase 1; hazardous waste management program, Baltimore, Maryland, 1-8-81

80317 12-4-80 / Pennsylvania application for interim authorization, phase 1; hazardous waste management program, Harrisburg, Pa., 1-6-81

79390 11-28-80 / Standards of performance for new stationary sources, Research Triangle Park, N.C., 1-9-81

INTERIOR DEPARTMENT

Land Management Bureau—

81127 12-9-80 / Consideration of proposed wilderness designation of Scab Creek Area, Sublette County, Rock Springs District, Wyo., Pinedale, Wyo., 1-6-81

Surface Mining Reclamation and Enforcement Office—

84824 12-23-80 / Resubmitted Utah permanent regulatory program, Salt Lake City, Utah, 1-7-81

83544 12-19-80 / West Virginia Permanent Regulatory Program (resubmitted), Charleston, W. Va., 1-5-81

TRANSPORTATION DEPARTMENT

Federal Aviation Administration—

80295 12-4-80 / Issuance of airman medical certificates for certain conditions, Washington, D.C., 1-6 and 1-7-80

Office of the Secretary—

83252 12-18-80 / Special Air Traffic Rules and Airport Traffic Patterns Slot Allocation at Washington National Airport, Washington, D.C., 1-8-81

TREASURY DEPARTMENT

Internal Revenue Service—

80837 12-8-80 / Imputed interest rates, Washington, D.C., 1-8-81

List of Public Laws

Last Listing December 30, 1980

This is a continuing listing of public bills from the current session of Congress which have become Federal laws. The text of laws is not published in the Federal Register but may be ordered in individual pamphlet form (referred to as "slip laws") from the Superintendent of Documents, U.S. Government Printing Office, Washington, D.C. 20402 (telephone 202-275-3030).

H.R. 7709 / Pub. L. 96-578 To amend the Tariff Schedules of the United States to increase the quantity of cigarettes that may be accorded duty-free treatment if acquired in the insular possessions and entered by returning United States residents (Dec. 23, 1980; 94 Stat. 3358) Price $1.

H.R. 7626 / Pub. L. 96-579 Military Pay and Allowances Benefits Act of 1980 (Dec. 23, 1980; 94 Stat. 3359) Price $1.25.

H.R. 8195 / Pub. L. 96-582 To amend the Railroad Retirement Act of 1974 to extend certain cost-of-living increases (Dec. 23, 1980; 94 Stat. 3374) Price $1.

S. 1985 / Pub. L. 96-581 To authorize the Secretary of Agriculture to convey certain lands in the State of Arizona, to authorize the Secretary of the Interior to convey certain interests in lands in the State of Arizona, to amend the Act of March 14, 1978 (92 Stat. 154), and for other purposes (Dec. 23, 1980; 94 Stat. 3371) Price $1.

S. 3096 / Pub. L. 96-580 To amend the Wild and Scenic Rivers Act to authorize the acquisition of certain lands in Douglas County, Wisconsin (Dec. 23, 1980; 94 Stat. 3370) Price $1.

H.R. 6796 / Pub. L. 96-583 To amend and extend title VII of the Comprehensive Employment and Training Act (Dec. 23, 1980; 94 Stat. 3375) Price $1.

H.R. 7682 / Pub. L. 96-584 To amend title 10, United States Code; to provide greater flexibility for the Armed Forces in ordering Reserves to active duty, and for other purposes (Dec. 23, 1980; 94 Stat. 3377) Price $1.

H.R. 7814 / Pub. L. 96-585 To designate certain lands of the Fire Island National Seashore as the "Otis Pike Fire Island High Dune Wilderness", and for other purposes (Dec. 23, 1980; 94 Stat. 3379) Price $1.

H.R. 7306 / Pub. L. 96-586 To provide for the orderly disposal of certain Federal lands in Nevada and for the acquisition of certain other lands in the Lake Tahoe Basin, and for other purposes (Dec. 23, 1980; 94 Stat. 3381) Price $1.

S. 1142 / Pub. L. 96-587 Authorizing appropriations to the Secretary of the Interior for services necessary to the nonperforming arts functions of the John F. Kennedy Center for the Performing Arts, and for other purposes (Dec. 23, 1980; 94 Stat. 3387) Price $1.

Documents Relating to Federal Grant Programs

This is a list of documents relating to Federal grant programs which were published in the Federal Register during the previous week.

RULES GOING INTO EFFECT

84998 12-24-80 / EPA—Grants for construction of treatment works; Clean Water Acts effective 12-16-80

84037 12-22-80 / DOT/NHTSA—Highway Safety innovative project grants program; effective 12-22-80

DEADLINES FOR COMMENTS ON PROPOSED RULES

85082 12-24-80 / ED—Education of handicapped children—Implementation of the Handicapped Act; Nondiscrimination on the basis of handicap in programs and activities receiving or benefiting from Federal financial assistance; comments by 2-9-81

APPLICATIONS DEADLINES

84195 12-22-80 / DOT/NHTSA—Safety innovative project grants program; preapplications accepted until 2-1-81

85145 12-24-80 / ED—College library resources program; apply by 3-23-81

85144 12-24-80 / ED—Library Career training program; apply by 3-2-81

85144 12-24-80 / ED—Strengthening research library resources program; apply by 3-16-81

84843 12-23-80 / ED—State educational agencies; special needs of migratory children; apply by 4-15-81

84843 12-23-80 / ED—State Student Incentive Grant (SSIG) Program; apply by 1-26-81

84154 12-22-80 / HHS/Sec'y—Poverty Research Center grant applications; apply by 2-16-81

APPLICATIONS DEADLINES

84898 12-23-80 / Labor/ETA—Comprehensive Employment and Training Act programs; youth community conservation and improvement projects and employment and training programs; members of migrant and other seasonally employed farmworker families; preapply by 1-9-81

MEETINGS

85158 12-24-80 / HHS/ADAMHA—Community Alcoholism Service Review Committee, Bethesda, Md. (partially open), 1-10 and 1-11-80

85158 12-24-80 / HHS/ADAMHA—Mental Health Small Grant Review Committee, Washington, D.C. (partially open), 1-29 through 1-31-81

85158 12-24-80 / HHS/ADAMHA—Psychiatry Education Review Committee, Rockville, Md. (partially open), 1-28 through 1-30-81

OTHER ITEMS OF INTEREST

84768 12-23-80 / ED—College Work-Study; supplemental educational opportunity grant; annual revision of sample cases and benchmark figures

84058 12-22-80 / ED—Education Department General Administrative Regulations (EDGAR)—Grant programs without specific regulations

85422 12-24-80 / ED—Library career training program (Title II—BHEA)

85430 12-24-80 / ED—Strengthening research library resources program (Title II-C HEA)

84147 12-22-80 / FMCS—Labor-Management Cooperation Program; comments by 1-18-81

84899 12-23-80 / Labor/ETA—Employment transfer and business competition determinations; list of applications filed

THE FEDERAL REGISTER: WHAT IT IS AND HOW TO USE IT

FOR: Any person who uses the Federal Register and Code of Federal Regulations.

WHO: The Office of the Federal Register.

WHAT: Free public briefings (approximately 2½ hours) to present:

1. The regulatory process, with a focus on the Federal Register system and the public's role in the development of regulations.
2. The relationship between Federal Register and the Code of Federal Regulations.
3. The important elements of typical Federal Register documents.
4. An introduction to the finding aids of the FR/CFR system.

WHY: To provide the public with access to information necessary to research Federal agency regulations which directly affect them, as part of the General Services Administration's efforts to encourage public participation in Government actions. There will be no discussion of specific agency regulations.

WHEN: January 16 and 30; February 13 and 27; at 9 a.m. (identical sessions).

WHERE: Office of the Federal Register, Room 9409, 1100 L Street NW., Washington, D.C.

RESERVATIONS: Call King Banks, Workshop Coordinator, 202-523-5235.

12-31-80
Vol. 45—No. 252
BOOK 2:
Pages
86669-87012

federal register

Book 2 of 2 Books
Wednesday, December 31, 1980

86672 Part II—OFR:
Approved Incorporations by Reference in Titles 1-16 and Title 46

86694 Part III—EPA:
Noise Emission Standards for Transportation Equipment; Motorcycles and Motorcycle Exhaust Systems; Final Rule

86732 Part IV—EPA:
Noise Emission Standards for Transportation Equipment; Additional Testing Requirements for Motorcycles and Motorcycle Exhaust Systems; Proposed Rulemaking

86736 Part V—ICC:
Motor Carrier Rate Bureaus; Tariffs Containing Joint Rates and Through Routes; Freight Forwarder Contract Rates; Elimination of Gateway Restrictions and Circuitous Route Limitations; Removal of Restrictions From Authorities of Motor Carriers of Property; Intercorporate Hauling Reform; Lease of Equipment and Drivers to Private Carriers; Interpretation—Intercorporate Hauling; Applications and Acceptable Forms of Request for Operating Authority

86812 Part VI—HHS/HDSO/HCFA:
Foster Care

86854 Part VII—ED:
Student Assistance General Provisions; Final Regulations and Request for Comments

86872 Part VIII—ED:
International Education Programs; Final Regulations and Request for Comments

86886 Part IX—ED:
Institutional Grants for Graduate and Professional Study; Proposed Rulemaking

86890 Part X—ED:
Law School Clinical Experience Program; Proposed Rulemaking

86894 Part XI—ED:
Educational Opportunity Centers Programs; Propose Rulemaking

86900 Part XII—ED:
Special Services for Disadvantaged Students Progra

86908 Part XIII—ED:
Talent Search Program

86914 Part XIV—ED:
Upward Bound Program

CONTINUED INSIDE

86922	Part XV—ED: Training Program for Special Programs Staff and Leadership Personnel
86928	Part XVI—ED: National Graduate Fellows Program
86932	Part XVII—ED: Cooperative Education Program
86946	Part XVIII—EPA: Control of Air Pollution From Aircraft; Standards Amended
86950	Part XIX—OMB/FPPO: Research and Development Procurement; Control of Management Systems and Data Required of Contractors; Proposed Policy Letters
86966	Part XX—EPA: Hazardous Waste Management System; Storage by Transporters; Shipments From Treatment, Storage, or Disposal Facilities; Transportation by Rail
86976	Part XXI—DOE: Procedures for Public Participation in Power and Transmission Rate Adjustments and Extensions*
86988	Part XXII—DOE-WAPA: Colorado River Storage Project; Order Confirming, Approving, and Placing Increased Power Rates in Effect on an Interim Basis
87002	Part XXIII—USDA/AMS: Regulations and Policy Statements Under the Packers and Stockyards Act
87008	Part XXIV—CAB: Pre-Filing Tariff Approval Procedures and Special Tariff Permission

federal register

Wednesday
December 31, 1980

Part II

Office of the Federal Register

Approved Incorporations by Reference in Titles 1-16 and Title 46

Title 7	Chapter I, Agricultural Marketing Service, Department of Agriculture
	Chapter III, Animal and Plant Health Inspection Service, Department of Agriculture
	Chapter IX, Agricultural Marketing Service, Department of Agriculture
	Chapter XVII, Rural Electrification Administration, Department of Agriculture
	Chapter XXVIII, Food Safety and Quality Service, Department of Agriculture
Title 9	Chapter I, Animal and Plant Health Inspection Service, Department of Agriculture
	Chapter III, Food Safety and Quality Service, Department of Agriculture
Title 10	Chapter I, Nuclear Regulatory Commission
	Chapter II, Department of Energy
Title 12	Chapter VII, National Credit Union Administration
Title 13	Chapter I, Small Business Administration
Title 14	Chapter I, Federal Aviation Administration, Department of Transportation
Title 16	Chapter II, Consumer Product Safety Commission
Title 46	Chapter I, Coast Guard, Department of Transportation

OFFICE OF THE FEDERAL REGISTER

1 CFR Part 51

Approval of Incorporations by Reference

AGENCY: Office of the Federal Register.

ACTION: Approval of incorporations by reference.

SUMMARY: The Director of the Federal Register has received requests from several agencies to approve materials incorporated by reference into Titles 1 through 16 of the Code of Federal Regulations (CFR). This document contains a table of items that have been approved by the Director for Titles 1 through 16 as well as some material for Title 46 of the CFR.

EFFECTIVE DATE: The Director approves the following incorporations by reference for one year effective January 1, 1981, unless otherwise noted.

FOR FURTHER INFORMATION CONTACT: Rose Anne Lawson, (202) 523–4534.

SUPPLEMENTARY INFORMATION:

Authority

Each agency that wishes material incorporated by reference in the CFR to remain effective must annually submit to the Director a list of that material and the date of the applicable edition (1 CFR 51.13).

The materials included on the table below are incorporated by reference in the CFR under 5 U.S.C. 552(a) and 1 CFR Part 51. These procedures provide that material approved for incorporated by reference by the Director of the Federal Register has the same legal status as if it were published in full in the Federal Register.

Availability

Before an agency may incorporate by reference any material into the Code of Federal Regulations, it must make the material reasonably available to the class or persons affected by it.

Agencies have indicated where each item included in the table may be obtained. The materials approved for incorporation by reference are available for inspection and copying at the Office of the Federal Register, 1100 L Street, NW, Washington, D.C. (202) 633–6930.

Amendments

If the producer of materials approved for incorporation by reference changes or updates the material and the agency wishes to enforce the changed or updated version, the agency must publish an amendatory document in the Federal Register indicating that the material is amended. The agency also is responsible for making this material reasonably available to the affected public, and must indicate where the material may be obtained. Amendments are not properly incorporated until the amendatory document is published in the Federal Register, and the amended material is filed at the Office of the Federal Register and is made available to the public.

Extensions

The Director has granted extensions of approval with respect to some material. These extensions are necessary in order to complete the review process under 1 CFR 51.13. Materials to which an extension applies are marked in the table.

Other CFR Titles

For materials approved for incorporation by reference in Titles 28 through 41 of the CFR, see documents published on June 30, 1980 at 45 FR 44090; on July 14, 1980 at 45 FR 47111; and on September 9, 1980 at 45 FR 59297.

For materials approved for incorporation by reference in Titles 42 through 50 of the CFR, see documents published on September 30, 1980 at 45 FR 64816; on October 31, 1980 at 45 FR 72464; on December 1, 1980 at 45 FR 79489; and on December 10, 1980 at 45 FR 81484. In addition, this document announces some final approvals for incorporation by reference into Title 46 of the CFR.

For material approved for incorporation by reference in Titles 17 through 27 of the CFR, a document will be published on March 31, 1981.

Problems

If there is a problem getting the material, notify the agency. If the material is not available at all, notify the Director of the Federal Register (NARS), Washington, D.C. 20408, or call (202) 523–4534.

Dated: December 18, 1980.

John E. Byrne,

Director of the Federal Register.

7 CFR Parts 28, 31, 32, 201, 982—Agricultural Marketing Service, U.S. Department of Agriculture

	CFR citation
Association of Official Seed Analysts (AOSA)	
Secretary Treasurer, AOSA, c/o U.S. Department of Agiculture, Seed Standardization Branch, Rm. 213, Bldg. 306 Agricultural Research Center, Beltsville, Maryland 20705	
Contribution No. 26, "Microbiological Assay of Fungicide—Treated Seeds," revised May, 1964.	201.58c
Contribution No. 28, "A Standardized Phenol Mehod for Testing Wheat Seed for Varietal Purity," revised June 1965.	201.58a(c)
NOTE: All contributions listed are to the *AOSA Handbook* on *Seed Testing*	
American Society for Testing and Materials (ASTM)	
1916 Race Street, Philadelphia, Pennsylvania 19103	
ASTM D584 Standard Method of Test for Wool Content of Raw Wool (1972).	31.204 (a)(5)(i)
ASTM D1060 Standard Method of Core Sampling of Raw Wool in Packages for Determination of Percentages of Clean Wool Fiber Present (1971).	31.204 (a)(5)(i) and 32.204 (b)(4)(i)
ASTM D2255 Standards for Appearance Grade Yarn on Bobbins. (1979).	28.956 (Item 17.1)
Federal-State Inspection Service	
Oregon Department of Agriculture, Agriculture Bldg., Salem, Oregon 97310.	
Extensions granted to Feb. 1, 1981 for the following publications:	
Oregon Grade Standards Filberts in Shell (August 25, 1975 Edition).....	932.45; 51; 453
Oregon Grade Standards for Filberts (Hazelnut) Kernels (July 20, 1976 Edition).	982.50; 101

7 CFR CHAPTER III (Parts 300 to 399)—Animal and Plant Health Inspection Service, U.S. Department of Agriculture

U.S. Department of Agriculture

	CFR Citation
Regulatory Support Staff, Plant Protection and Quarantine Programs, Animal and Plant Health Inspection Service, USDA, Room 635, Federal Bldg., Hyattsville, MD 20782	
Japanese Beetle Program Manual-APHIS M-301-48 (June 1979).....	300.3(b) 301.48-1
Plant Protection & Quarantine Programs Treatment Manual-January 1976 (revised as of December 1980).	300.3(a) 301.348-1 331.7(a)

7 CFR CHAPTER XVII (Parts 1700-1799)—Rural Electrification Administration, U.S. Department of Agriculture

Copies of Appendix A Bulletins will be available upon request in person or by mail to the Management Service Division, Room 4024-S, Washington, D.C. 20250 (Alll REA Bulletins are contained in 7 CFR 1701)

Rural Electrification Administration	
1-7—General Funds 12/77 with/all supplements to 3/79.....	Citation 1701
2-1—Guiding Statement of REA Policy Concerning Its Relationship with Borrowers 8/69.	
5-1—Joint Use of REA Borrowers' Facilities by Electric and Telephone Systems 3/54 with/all supplements to 2/72.	
2-1—Guiding Statement of REA Policy Concerning Its Relations with Borrowers 8/69.	
20-2—Electric Loan Policies and Application Procedures 6/77 with/all supplements to 4/79.	
20-3—Obtaining Adequate Right-of-Way and Submission of Title Evidence by Electric Borrowers 7/56 with/all supplements to 10/76.	
20-5—Extensions of Payments of Principal and Interest 5/72	
20-6—Loans for Generation and Transmission 5/69	
20-8—Purchase of Real Estate by Electric Borrowers 7/63	
20-9—Notes, Interest Computation, Payments, and Loan Account Statements 10/76 with/all supplements to 1/78.	
20-14—Supplemental Financing for Loans Considered Under Section 4 of the Rural Electrification Act 2/71 with/all supplements to 8/78.	
20-15—Equal Employment Opportunity in Construction Financed with REA Loans 7/70.	
20-19—Nondiscrimination Among Beneficiaries of REA Programs 7/78.	
20-20—Deferment of Principal Repayments for Investment in Supplemental Lending Institutions 1/71.	

7 CFR CHAPTER XVII (Parts 1700–1799)—Rural Electrification Administration, U.S. Department of Agriculture—Continued

Copies of Appendix A Bulletins will be available upon request in person or by mail to the Management Service Division, Room 4024–S, Washington, D.C. 20250 (Alll REA Bulletins are contained in 7 CFR 1701)

20–21—Environmental Policies and Procedures 1/80.....

20–22—Guarantee of Loans for Bulk Power Supply Facilities 4/77.....

24–1—Electric Loan Policy for Section 5 Loans 3/69.....

26–1—Budgetary Control and Advance of Loan Funds 5/71 with/all supplements to 10/79.

40–1—Payments to Architects, Engineers, Contractors, and Suppliers 3/69.

40–2—Insurance Coverage for Borrower's Contractors, Engineers, and Architects and Bond Requirements for Borrowers' Contractors 4/76 with/all supplements to 6/79.

40–5—Common Use of Poles for Distribution and Transmission Lines 1/70.

40–6—Construction Methods and the Purchase of Materials and Equipment 8/70 with/all supplements to 4/79.

40–7—National Electrical Safety Code-ANSI C2, 1977 Edition 4/77 .....

40–8—Construction Specifications, Drawings, and Contract Forms for Distribution, Transmission, and Generation Facilities 5/73 with/all supplements to 10/77.

41–1—Engineering Services for Electric Borrowers 5/67 with/all supplements to 11/78.

42–1—Architectural Services for Electric Borrowers 8/69 .....

43–5—List of Materials Acceptable for Use on Systems of REA Electrification Borrowers 7/78 with/all supplements to 4/79.

43–6—Selection and Inspection of Materials and Equipment, Electrification Borrowers 12/76.

43–9—"Buy American" Requirement 7/55 .....

44–1—Specifications and Standards for Materials and Equipment 10/78.

44–2—Specification for Wood Poles, Stubs and Anchor Logs, and for Preservative Treatment of These Materials to be Purchased by REA Borrowers, Electric and telephone 11/76 with/all supplements to 11/77.

44–3—Specification for Wood Crossarms, Solid and Laminated Transmission Timbers, to be Purchased by REA Borrowers, Electric and Telephone 1/72 with/all supplements to 12/75.

44–4—Quality Control and Inspection of Timber Products 11/76.....

44–5—List of Authorized Independent Inspection Agencies (Timber Products) 6/76.

44–7—Acceptance of Standards, Standard Specifications, Drawings, Materials, and Equipment for the Electric and Telephone Programs 4/71.

60–1—Circuit Diagrams, Electrical Data Sheets and Other Drawings for Systems of Electric Borrowers 8/55.

60–10—Construction Work Plans, Electric Distribution Systems 12/67...

61–10—Powerline Contacts by Eagles and Other Large Birds 3/79 .....

62–1—Transmission Line Manual 8/80 with/all supplements to 7/78.....

62–3—Narrow Profile Electric Transmission Line Structure Designs 11/72.

80–8—Construction, Operation, and Maintenance of Electric Lines on Land Administered by the U.S. Forest Service 5/56 with/all supplements to 1/64.

80–11—Reports of Progress of Construction and Engineering Services 5/77.

81–4—Payment to Contractors for Materials Delivered 8/62.....

81–6—Close-Out Procedures and Documents for Contract Construction of Distribution and Transmission Facilities 7/77.

81–7—Changes or Corrections in Line Construction 11/58.....

81–8—Bidders' Qualifications 6/59.....

81–9—Preparation of Plans and Specifications for Distribution and Transmission Facilities 7/74.

83–1—Adequate Grounding of Primary Distribution Lines 3/77.....

85–1—Closeout Procedure and Documents for the Contract Construction of Generating Facilities and Associated Buildings 8/78.

86–1—Closeout Procedure and Documents for the Construction of Buildings Other Than Generating Plants 12/78.

86–2—Pre-Construction Activities for Headquarters Facilities for Electric Borrowers 5/72.

7 CFR CHAPTER XVII (Parts 1700–1799)—Rural Electrification Administration, U.S. Department of Agriculture—Continued

Copies of Appendix A Bulletins will be available upon request in person or by mail to the Management Service Division, Room 4024–S, Washington, D.C. 20250.(Alll REA Bulletins are contained in 7 CFR 1701)

86–3—Headquarters Facilities for Electric Borrowers 4/72.....

86–5—Contract to Construct Buildings, REA Form 257 6/73.....

100–1—Selection of an Attorney by an REA Borrower 4/60.....

100–2—Minutes of the Meetings of Boards of Directors, Members or Stockholders 3/60.

100–4—Financial Security of REA Distribution Borrowers 4/72 with/all supplements to 2/75.

101–1—Constitution and Operations of the Board of Directors of a Power Supply Cooperative Borrower 8/77.

102–2—Waiver of Security Instrument Provisions Relating to Certain Retirements of Capital by Distribution Borrowers 7/71.

103–2—Use and Approval of General Funds in Extensions and Additions to Plant 6/71.

103–9—5 Percent Treasury Certificates of Indebtedness—REA Series and 2 Percent Treasury Bonds—REA series 10/77.

105–5—Financial Forecast—Electric Distribution Systems 11/73 with/all supplements to 1/75.

107–1—Data Processing Systems 2/79.....

108–1—Electric Distribution Borrowers' Financial and Statistical Reports 12/79.

108–2—Operating Reports—Power Supply Borrowers and Distribution Borrowers with Generating Facilities 12/79.

109–4—Selecting a Qualified Manager 6/70.....

111–1—Wholesale Contracts for Purchase and Sale of Electric Equipment 4/69; Supplement 3/70.

111–3—Power Supply Surveys 4/78.....

111–4—Electric Wholesale Rates—Power Supply Borrowers 3/72.....

112–2—Electric Retail Rates 4/71.....

112–3—Area Coverage Service 9/58.....

112–6—Large Power Rates and Contracts, and Sales for Resale 9/72.....

114–2—Minimum Insurance and Fidelity Coverages for Electric and Telephone Borrowers 4/73 with/all supplements to 2/79.

115–1—Sales of Capital Assets by Electric Borrowers 12/72.....

115–2—Merger and Consolidation of Electric Distribution Borrowers 11/72.

115–3—Removal or Relocation of Electric Facilities Resulting from the Exercise of Rights by Government Agencies 2/58.

120–1—Estimates of KWH Consumption and Power Requirements 3/74 with/all supplements to 1/78.

140–1—Load Management Program 1/77.....

145–1—Development, Approval, and Use of Irrigation Studies 1/77.....

161–5—Electric System Review and Evaluation 10/78.....

180–2—Manual for Preservation of Borrowers' Records (Electric) 6/72...

180–6—Selection of Depositories for Funds of REA Borrowers 4/71.....

181–1—Uniform System of Accounts 3/78 with/all supplements to 1/79

181–2—Standard List of Retirement Units 5/68.....

181–3—Accounting Interpretations for Rural Electric Borrowers 2/72; Interpretations 113 and 617 9/73.

182–1—Evaluation and Enforcement of Internal Control of Borrowers' Enterprises 1/65.

183–1—Depreciation Rates and Procedures 10/77.....

184–2—Suggested Work Order Procedure for Electric Borrowers of the Rural Electrification Administration 9/73 with/all supplements to 3/76.

184–3—Guide for Establishing Continuing Property Records 9/61.....

185–1—Audit of REA Borrowers' Accounting Records 1/72.....

185–2—Audit Working Paper Guide 11/72.....

300–5—General Funds, 8/69.....

300–7—Member Service Program—Telephone 5/65.....

301–1—Guiding Statement of REA Policy Concerning Its Relationship with Borrowers 8/69.

305–1—Joint Use of Facilities for Telephone and Electric Service 3/54, with all supplements to 2/72.

Extension granted to Feb. 1, 1981.

320–2—Extension of Payments of Principal and Interest 5/72.....

320–3—Working Capital in Loans to Telephone Borrowers 1/59.....

7 CFR CHAPTER XVII (Parts 1700–1799)—Rural Electrification Administration, U.S. Department of Agriculture—Continued

Copies of Appendix A Bulletins will be available upon request in person or by mail to the Management Service Division, Room 4024–S, Washington, D.C. 20250 (All REA Bulletins are contained in 7 CFR 1701)

320–4—Preloan Procedures for Telephone Loan Applicants 6/62.....

320–5—Headquarters Facilities for Telephone Borrowers 5/72.....

320–9—Organization and Capital Structure of Telephone Borrowers 3/65.

320–12—Notes, Interest Computation, Payments and Loan Account Statement 10/76, with all supplements to 7/78.

Extention granted to Feb. 1, 1981.

320–13—Loans for Switched Facilities 2/60.....

320–14—Loans for Telephone System Improvements and Extensions 5/71, with all supplements to 5/77.

320–15—Equal Employment Opportunity in Construction Financed with REA Loans 7/70.

320–19—Nondiscrimination Among Beneficiaries of REA Programs 7/78.

320–21—Environmental Policies and Procedures 1/80.....

320–22—Guarantee of Loans for Telephone Facilities 2/75, with all supplements to 9/75.

320–23—Construction Certification Procedures for Designated Telephone Borrowers 12/77.

321–2—Loan Security Requirements for Telephone Loans 9/75.....

322–1—Area Coverage Survey 5/71.....

322–2—Rural Area Coverage—Telephone Loans 4/67.....

323–1—Determination by Administrator with Respect to Non-Duplication of Lines, Facilities, or Systems 10/54.

324–1—Loans for Refinancing Outstanding Indebtedness of Telephone Borrowers 10/60.

325–1—Financing Lines, Facilities, or Systems Outside of Rural Areas 11/60.

326–1—Acquisitions of Telephone Facilities and Systems 5/69.....

327–1—Advance of Telephone Loan Funds 6/72, with all supplements to 7/75.

328–1—CATV Financing Under the Consolidated Farm and Rural Development Act 6/79.

Extensions granted to Feb. 1, 1981.

340–1—Final Payments to Contractors, Engineers, and Architects—Telephone Program 8/63.

340–2—Payments to Architects, Engineers, and Suppliers 3/69.....

340–3—Coordination of Borrowers' Activities and those of Connecting Systems 2/72.

340–5—Insurance Coverage for Borrowers' Contractors, Engineers, and Architects and Bond Requirements for Borrowers' Contractors 4/76.

341–1—Final Statement of Engineering Fee and Certificate of Engineer, Telephone Engineering Service Contract 12/71.

341–3—Engineering Services for Telephone Borrowers 12/75, with all supplements to 7/77.

342–1—Architectural Services for Telephone Borrowers 7/67.....

344–1—Methods of Purchasing Materials and Equipment for Use on System of Telephone Borrowers 1/58, with all supplements to 4/78.

344–2—List of Materials Acceptable for Use on Telephone Systems of REA Borrowers 1/79, with all supplements to 9/80.

344–3—"Buy American" Requirement 7/55.....

345–1—Specifications for Wood Poles, Stubs, and Anchor Logs, and for Preservative Treatment of These Materials to be Purchased by REA Borrowers (PE–9) 1/77, with all supplements to 11/77.

345–2—List of Authorized Independent Inspection Agencies (Timber Products) 6/76.

345–3—Acceptance of Standards, Standard Specifications, Drawings, Materials, and Equipment for the Electric and Telephone Programs 4/71.

345–4—Specification for Wood Crossarms, Construction Lumber, and Pole Keys, and for the Preservative Treatment of These Materials to be Purchased by REA Borrowers (PE–16) 1/72, with all supplements to 12/75.

345–5—Defective and Non-Standard Materials and Equipment 9/58.....

345–6—REA Standard for Splicing Plastic-Insulated Cables (PC–2) 1/78

7 CFR CHAPTER XVII (Parts 1700–1799)—Rural Electrification Administration, U.S. Department of Agriculture—Continued

Copies of Appendix A Bulletins will be available upon request in person or by mail to the Management Service Division, Room 4024–S, Washington, D.C. 20250 (Alll REA Bulletins are contained in 7 CFR 1701)

345–7—REA Standard for Splicing Plastic-Insulated Cables to Paper-Insulated Cables (PC–3) 7/66.

345–8—Splicing Standard for Joining Paper or Pulp-Insulated, Lead-Sheathed Cables to Paper or Pulp-Insulated Cables, Lead-Sheathed Cables (PC–1) 7/66.

345–9—Quality Control and Inspection of Timber Products 1/77.....

345–13—REA Specification for Aerial and Underground Telephone Cable (PE–22) 6/78, with all supplements to 4/79.

345–14—REA Specifications Telephone Cables (Air Core) for Direct Burial (PE–23) 7/78, with all supplements to 4/79.

345–16—REA Specification for Reinforced Heavy Duty Point Type Transportation Brackets (PE–18) 9/62.

345–18—REA Specification for Plastic-Insulated, Plastic-Jacketed Station Wire (PE–20) 3/73.

345–19—REA Specification for Figure 8 One-Pair Distribution Wire (PE–27) 3/66.

345–20—REA Specification for Figure 8 Multipair Distribution Wire (PE–28) 7/68.

345–21—REA Specification for Polyethylene Raw Material (PE–200) 5/80, with all supplements to 9/80.

345–22—REA Specification for Voice Frequency Loading Coils (PE–26) 10/78.

345–23—REA Specification for Building-Out Capacitors (PE–30) 10/73...

345–24—REA Specification for Spindle-Threaded, Steel Communication Insulator Pins and Associated Plastic Bushing (PE–34) 9/62.

345–25—REA Specification for Deadend Clevis Assembly for use with Open Wire Telephone Conductors (PE–36) 12/62.

345–26—REA Specification for Buried Plant Housings (PE–35) 7/76.....

345–27—REA Specification for D–66/H–88 Junction Impedance Compensators (PE–31) 2/74.

345–28—REA Specification for Seven Wire Galvanized Steel Strand (PE–37) 1/63.

345–30—REA Specification for Ringing Generator Equipment (PE–40) 2/71, with all supplements to 2/73.

345–31—REA Specification for Polyethylene-Insulated Bridle Wire (PE–19) 2/65.

345–36—REA Specification for Parallel Conductor Drop Wire (PE–7) 11/66.

345–38—REA Specification for Wood Crossarms Brace (PE–13) 11/63....

345–39—REA Specification for Telephone Station Protectors (PE–42) 5/80.

345–42—REA Specification for Low Loss Buried Distribution Wire (PE–44) 3/71.

Extension granted to Feb. 1, 1981.

345–44—REA Specification for Figure 8 Drop Wire (PE–46) 3/64.....

Extension granted to Feb. 1, 1981.

345–45—Field Trials of Telephone Construction Materials and Equipment 10/76, with all supplements to 2/79.

345–46—REA Specification for Clamps to Support Figure 8 Distribution Wire (PE–48) 7/68.

Extension granted to Feb. 1, 1981.

345–47—REA Specification for Seven Wire Aluminum Clad Steel Strand (PE–49) 4/66.

Extension granted to Feb. 1, 1981.

345–50—REA Specification for Trunk Carrier Systems (PE–60) 9/80.....

345–51—REA Specification for Crystalline Proplylene/Ethylene Copolymer Raw Material (PE–210) 4/67.

345–52—REA Standard for Service Entrance and Station Protector Installations 1/80.

345–53—REA Specification for Encapsulations, Splice Closure, and Pressure Blocks (PE–70) 3/71.

345–54—REA Specification for Telephone Cable Splicing Connectors (PE–52) 12/71.

345–55—REA Specification for Central Office Loop Extenders & Loop Extender voice Frequency Repeater Combinations (PE–61) 12/73.

7 CFR CHAPTER XVII (Parts 1700-1799)—Rural Electrification Administration, U.S. Department of Agriculture—Continued

Copies of Appendix A Bulletins will be available upon request in person or by mail to the Management Service Division, Room 4024-S, Washington, D.C. 20250 (Alll REA Bulletins are contained in 7 CFR 1701)

345-57—REA Specification for Microwave Radio Equipment (PE-63) 6/69.

345-58—REA Specification for Flexible and Semirigid Polyvinyl Chloride Raw Material (PE-220) 7/69.

Extension granted to Feb. 1, 1981.

345-59—REA Specification for Inside Wiring Cable (PE-71) 3/71, with all supplements to 3/78.

345-60—REA Specification for Coaxial Drop Cable for ETV and Other Wide Band Applications (PE-73) 10/69.

345-61—REA Specification for Switchboard Cable (PE-72) 3/71, with all supplements to 3/78.

345-63—REA Standard PC-4 for Acceptance Tests and Measurements of Telephone Plant 5/76.

Extension granted to Feb. 1, 1981.

345-64—REA Specification for Ringers (PE-47) 4/7 .....

345-65—REA Specification for Cable Shield Bonding Connectors (PE-33) 6/78.

345-66—REA Specification for Subscriber Carrier Systems (PE-64) 9/79 with all supplements to 8/80.

345-67—REA Specification for Filled Telephone Cables (PE-39) 11/76, with all supplements to 4/79.

345-69—REA Specification for Two-Wire Voice Frequency Repeater Equipment (PE-29) 1/78.

345-70—REA Specification for Filled Buried Wire (PE-54) 8/74, with all supplements to 3/80.

345-72—REA Specification for Filled Splice Cases (PE-74) 5/75 .....

Extension granted to Feb. 1, 1981.

345-73—REA Specification for All-Weather Pressure-Sensitive Vinyl Tape (PE-68) 11/76.

345-74—REA Specification for Improved 500 Type Telephone Sets (PE-41) 7/78, with all supplements to 12/79.

345-75—REA Specification for Electronic Trunk Circuits (PE-65) 1/77 ...

345-76—REA Specification for Spring Action Bonding Connectors Within Buried Plant Housing (PE-57) 5/77.

345-77—REA Specification for Serving Area Interface Housings (PE-79) 1/78.

345-78—REA Specification for Carbon Arrestor Assemblies for Use in Protectors (PE-78) 2/80 with all supplements to 7/80.

345-79—REA Specification for Electronic Equipment Housings (PE-69) 5/78, with all supplements to 7/80.

345-80—REA Specification for Flat Oval Telephone Cords (PE-75) 7/78

345-81—REA Specification for Modular Telephone Set Hardware (PE-76) 8/78.

Extension granted to Feb. 1, 1981.

345-82—REA Specification for Wood Telephone Pedestal Stubs (PE-82) 6/80.

345-83—REA Specification for Gas Tube Surge Arresters (PE-80) 7/79..

345-84—REA Specification for Expanded Dielectric Coaxial Cable (PE-84) 9/80.

360-1—Checklist for Review of a Supplemental Loan Proposal or an Area Coverage Design 10/78.

360-2—Area Coverage Design 5/67 .....

380-1—Right-of-Way and Title Procedure—Telephone 7/56, with all supplements to 1/77.

380-3—Weekly Progress Report of Telephone Constr. & Engr. Service 7/63, with all supplements to 2/64.

Extension granted to Feb. 1, 1981.

381-1—Tabulation of Bids for Contract Construction of Telephone Outside Plant Facilities 5/64.

381-2—Telephone System Construction Contract, Labor and Material, REA Form 515 2/80.

381-4—Closeout Documents, Telephone Construction Contract, Labor and Materials (Outside Plant) 10/63.

381-6—Payment to Contractors for Material Delivered 8/62 .....

381-7—Methods of Construction of Telephone Borrowers' Initial System Outside Plant Facilities 6/57

7 CFR CHAPTER XVII (Parts 1700-1799)—Rural Electrification Administration, U.S. Department of Agriculture—Continued

Copies of Appendix A Bulletins will be available upon request in person or by mail to the Management Service Division, Room 4024-S, Washington, D.C. 20250 (Alll REA Bulletins are contained in 7 CFR 1701)

381-8—Contract Construction, Telephone Borrowers' Initial System Outside Plant Facilities 9/63, with all supplements to 7/77.

381-9—Amendments to Contracts for Construction or Installment of Telephone Borrowers' Facilities 8/53.

381-10—Subcontracts Under Contracts for Construction or Installation of Telephone Borrowers' Facilities 10/61.

381-11—Changes or Corrections in Line Construction 11/58.....

381-13—Bidders' Qualifications 6/59.....

382-1—Force-Account Construction, Telephone Borrowers' Initial System 2/58.

382-2—Construction of Telephone System Improvements & Extensions by Work Order or Contract 11/75.

382-3—Final Inventory Documents, Force Account Construction, Telephone Borrowers' Initial System 11/53, with all supplements to 7/60.

383-1—Preparation of Plans and Specifications for Construction of Outside Plant 5/67, with all supplements to 6/77.

383-4—Postloan Engineering Design Requirements for Supplemental Loans 11/74.

384-1—Purchasing and Installing Central Office Equipment 5/77.....

384-2—Closeout Documents for Central Office Equipment Contracts 10/65 with all supplements to 10/80.

Extension granted to Feb. 1, 1981.

384-3—Central Office Equipment Contracts and Specifications 10/79....

385-1—Preloan Procedures and Requirements for Service 12/62.....

385-2—Purchasing and Installing Special Electronic Equipment 2/69.....

385-3—Closeout Documents for Special Equipment Contracts 4/64.....

385-5—Loans to Finance Radio Equipment for Subscriber Service 4/66.

385-6—Preloan Procedure and Requirements for Radio Paging Service 12/75..

387-1—Preparation of Plans and Specifications for Construction of Telephone Borrowers' Buildings 12/61, with all supplements to 2/65..

387-2—Contract to Construct Buildings, REA Form 257 6/73.....

387-3—Final Documents Required to Closeout Construction of Buildings, Telephone Program 3/61..

387-5—Contract Construction, Telephone Borrowers' Buildings 4/61.....

388-1—Inventory and Appraisal of Existing Telephone Plant Retained as Part of New System 5/57..

400-2—Selection of an Attorney by an REA Borrower 4/60.....

400-4—Payment of Legal Fees From Loan and Equity Funds 12/65.....

400-5—Operating Conditions Endangering Loan Security 1/64.....

402-1—Mortgage Restrictions on Dividends and Other Distributions—Telephone Borrowers 12/62..

402-2—Partial Waiver of Security Instruments Provisions Relating to Distribution of Capital by Cooperatives 11/60..

403-3—Minutes of Meetings of Directors, Stockholders, or Members (Telephone) 10/59, with all supplements to 9/77..

403-4—5 Percent Treasury Certificates of Indebtedness—REA Series and 2 Percent Treasury Bonds—REA Series 10/77..

404-1—Approval of Connecting Company & Special Service Contracts and Leases 7/62..

407-1—Data Processing Systems 2/79.....

408-1—Telephone Borrowers Financial and Statistical Reports 11/70, with all supplements to 2/79..

409-1—Selection of a Manager by Telephone Borrower 5/72.....

411-1—Extended Area Service (EAS) 6/61.....

414-1—Minimum Insurance and Fidelity Coverages for Electric and Telephone Borrowers 4/73, with all supplements to 2/79..

415-1—Sale of Property by Telephone Borrowers 8/60, with all supplements to 7/79..

440-1—Telephone Borrowers' Technical Operation and Maintenance Activities 3/62..

460-2—Selection of Depositories for Funds of REA Borrowers 4/71.....

461-1—Accounting System Requirements for Telephone Borrowers of the Rural Electrification Administration 2/72, with all supplements to 1/76..

7 CFR CHAPTER XVII (Parts 1700–1799)—Rural Electrification Administration, U.S. Department of Agriculture—Continued

Copies of Appendix A Bulletins will be available upon request in person or by mail to the Management Service Division, Room 4024–S, Washington, D.C. 20250 (Alll REA Bulletins are contained in 7 CFR 1701)

462–1—Evaluation and Enforcement of Internal Control of Borrowers' Enterprises 1/65..

463–1—Depreciation Rates for Telephone Borrowers' 4/67.....

464–1—Accounting for Damages Resulting from Delayed Completion of Construction 2/59..

464–2—Accounting and Reporting Procedures Covering Large Investments in Special Communications Facilities 6/65..

465–1—Audit of REA Borrowers' Accounting Records 1/72.....

465–2—Audit Working Paper Guide 11/72.....

7 CFR Chapter XXVIII (Parts 2800 to 2899) Food Safety and Quality Service, Department of Agriculture

Munsell Color Company

CFR Citation

2411 North Calvert Street, Baltimore, MD 21218

CFR Citation

USDA Walnut Color Chart: (Shelled Walnuts), (Walnuts in the Shell) ... 2851.2276; 2946

American Public Health Association

1015 18th Street, NW., Washington, DC 20036

Standard Methods for the Examination of Dairy Products, 14th ed..... 2858.2726; .2728; .2730; .2732.

9 CFR CHAPTER I (PARTS 0 TO 199) Animal and Plant Health Inspection Service, U.S. Department of Agriculture

U.S. Department of Agriculture

CFR Citation

Veterinary Services, Animal and Plant Health Inspection Service, USDA, Federal Bldg., Hyattsville, MD 20782.

Recommended Brucellosis Eradication Uniform Methods & Rules (APHIS 91–1; July 1977).. 78.1; 78.8; 78.9; 78.29

Uniform methods & Rules-Bovine Tuberculosis Eradication (March 1980 Edition).. 77.1; 77.4; 77.5

World Health Organization

World Health Organization, Distribution and Sales Service, 1211 Geneva 27, Switzerland

United Nations Book Shop, New York, NY 10017

Laboratory Techniques in Rabies, Third Edition (1973) Edited by Martin M. Kaplan and Hilary Kaprowski. 113.129

9 CFR CHAPTER III (PARTS 300 TO 399) Food Safety and Quality Service, Department of Agriculture

CFR Citation

Association of Official Analytical Chemists

1111 N. 19th Street,

Suite 210, Arlington, VA 22209

Official Methods of Analysis of the Association of Official Analytical Chemists, 1980 ed.. 319.5

United States Department of Agriculture

Food Safety and Quality Service, Meat and Poultry Inspection Program, 14th and Independence Avenue, SW.; Washington, DC 20250

Diagram 1 of the Meat Denaturing Guide (MP Form 91)..... 325.13

Copies of MP Form 91 may also be obtained without charge, by writing to the Food Safety and Quality Service, U.S. Department of Agriculture, Compliance Program, Evaluation and Enforcement Division, Washington, DC 20250

10 CFR Chapter I (Parts 0—199)—Nuclear Regulatory Commission

Each of the following documents is available for inspection at the Nuclear Regulatory Commission's Library, 7920 Norfolk Avenue, Bethesda, Maryland. The individual documents are available through the sources listed below.

CFR Citation

American Association of Physicists in Medicine

335 E. 45th Street, New York, New York 10017

"Scientific Committee on Radiation Dosimetry of the American Association of Physicists in Medicine", Physics in Medicine and Biology, Volume 16, No. 3, 1971, 379–396. 35.21(c)

10 CFR Chapter I (Parts 0—199)—Nuclear Regulatory Commission—Continued

Each of the following documents is available for inspection at the Nuclear Regulatory Commission's Library, 7920 Norfolk Avenue, Bethesda, Maryland. The individual documents are available through the sources listed below.

	CFR Citation
American Nuclear Society (ANS)	
555 North Kensington Avenue, La Grange Park, Illinois 60525	
Proposed American Nuclear Society Standard—"Decay Energy Release Rates Following Shutdown of Uranium Fueled Thermal Reactors," Approved by Subcommittee ANS-5, ANS Standards Committee, October 1971.	Part 50, App. K, I.A.4
American National Standards Institute	
1430 Broadway, New York, New York 10018	
American Standard Code for Pressure Piping ASA B31.1 1955 Edition....	50.55a
U.S.A. Standard Code for Pressure Piping USAS B31.1.0 1967 Edition, Addenda A, B & C.	50.55a
U.S.A. Standard Code for Pressure Piping USAS B31.7 1969 Edition, Addenda A, B & C.	50.55a
ANSI N45.4-1972, "Leakage Rate Testing of Containment Structures for Nuclear Reactors, March 16, 1972.	Part 50, App. J, III.A.3.a
ANSI Standard MH5.1 "Basic Requirements for Cargo Containers" (1971).	73.26
Extension granted to Feb. 1, 1981	
International Standards Organization (ISO) 1496 "General Cargo Containers" 1978.	73.26
Extension granted to Feb. 1, 1981	
International Standards Organization (ISO) 389 "Standard Reference Zero for the Calibration of Puretone Audiometer" (1965).	73, App. B, I.B.b(2)
Extension granted to Feb. 1, 1981	
ANSI S3.6, "Specifications for Audiometers" (1979)	Part 73, App. B, I.B.b(2)
Extension granted to Feb. 1, 1981	
American Society of Mechanical Engineers (ASME)	
United Engineering Center, 345 East 47th Street, New York, New York 10017	
ASME Boiler and Pressure Vessel Code Section III	50.55a
Edition 1963: Addenda Summer 64; Winter 64	
Edition 1965: Addenda Summer 65; Winter 65; Summer 66; Winter 66; Summer 67; Winter 67.	
Edition 1968: Addenda Summer 68; Winter 68; Summer 69; Winter 69; Summer 70; Winter 70.	
Edition 1971: Addenda Summer 71; Winter 71; Summer 72; Winter 72; Summer 73; Winter 73.	
ASME Boiler and Pressure Vessel Code Section III, Division 1	50.55a
Edition 1974: Addenda Summer 74; Winter 74; Summer 75; Winter 75; Summer 76; Winter 76.	
Edition 1977: Addenda Summer 77; Winter 77; Summer 78	
ASME Boiler and Pressure Vessel Code Section XI, Division 1	50.55a
Edition 1970: Addenda Winter 70	
Edition 1971: Addenda Summer 71; Winter 71; Summer 72; Winter 72; Summer 73; Winter 73.	
Edition 1974: Addenda Summer 74; Winter 74; Summer 75; Winter 75; Summer 76; Winter 76.	
Edition 1977: Addenda Summer 77; Winter 77; Summer 78	
Draft ASME Code for Pumps and Valves for Nuclear Power dated November 1968 and 1 addenda dated 1970.	50.55a
American Society of Mechanical Engineers	
United Engineering Center, 2nd Flood Library, 345 East 47th Street, New York, New York 10017	
F. J. Moody, "Maximum Flow Rate of a Single Component, Two-Phase Mixture," Journal of Heat Transfer, Trans American Society of Mechanical Engineers, 87, No. 1, February 1965.	Part 50, App. K, I.C.1.b.
American Society for Testing Materials (ASTM)	
1916 Race Street, Philadelphia, Pennsylvania 19103	
ASTM E-185-73 and E-185-79 Standard Recommended Practice for Surveillance Tests for Nuclear Reactor Vessels.	Part 50, App. H, II.B
U.S. Department of Commerce National Technical Information Service	
5285 Port Royal Road, Springfield, Virginia 22161	

10 CFR Chapter I (Parts 0—199)—Nuclear Regulatory Commission—Continued

Each of the following documents is available for inspection at the Nuclear Regulatory Commission's Library, 7920 Norfolk Avenue, Bethesda, Maryland. The individual documents are available through the sources listed below.

	CFR Citation
Baker-Just, "Studies of Metal Water Reactions at High Temperatures, III. Experimental and Theoretical Studies of the Zirconium-Water Reaction," ANL-6548, page 7, May 1962.	Part 50, App. K, I.A.5
"PWR FLECHT (Full Length Emergency Cooling Heat Transfer) Final Report," Westinghouse Report WCAP-7665, April 1971.	Part 50, App. K, I.D.5
Federal Specifications	
Naval Publications and Forms Center, 5801 Tabor Road, Philadelphia, PA 19120	
GSA Interim Federal Specification W-A-00450B (GSA-FSS): Alarm Systems, Interior, Security, Components For.	73.50
General Electric Company	
Nuclear Energy Business Group, Technical Support Services, MC-211, 175 Curtner Avenue, San Jose, CA 95125	
"Loss-of-Coolant Accident and Emergency Core Cooling Models for General Electric Boiling Water Reactors." General Electric Company Report NEDO-10329, April 1971.	Part 50, App. K, I.D.7.c
International Atomic Energy Agency (IAEA)	
(Available from: Assistant Director for Export/Import and International Safeguards, Office of International Progams, Nuclear Regulatory Commission, Washington, DC 20555)	
IAEA INFCICR/225 Rev. 1, "The Physical Protection of Nuclear Material".	110.43(a)(1)
Institute of Electrical and Electronic Engineers (IEEE)	
United Engineering Center, 345 East 47th Street, New York, New York 10017	
IEEE-279, "Criteria for Protection Systems for Nuclear Generating Stations," dated August 30, 1968 and June 3, 1971.	50.55a(h)
National Rifle Association (NRA)	
Competitions & Training Division, 1600 Rhode Island Avenue, N.W., Washington, D.C. 20036	
NRA Target Manufacturers Index, December 1976	Part 73, App. B, IV.C.2-n.2
Nuclear Regulatory Commission	
Office of Standards Development, Washington, DC 20666	
Regulatory Guide 8.15 "Acceptable Programs for Respiratory Protection" October, 1976.	20.103(c)

10 CFR Chapter II (Parts 200-699)—Department of Energy

Part 210-General allocation and price rules

	CFR Citation
American Society for Testing and Materials	
1916 Race Street, Philadelphia, PA 19103	
ASTM D-288-61 (R 1973) Standard Definition of terms Relating to Petroleum.	210.34

Part 211-Mandatory petroleum allocation regulations

American Society for Testing and Materials	
1916 Race Street, Philadelphia, Pennsylvania 19103	
ASTM Standard D 396-73 "Standard Specification for Fuel Oils"	211.51
ASTM Standard D 975-74 "Standard Specification for Diesel Fuel Oils".	211.51
Gas Processors Association	
1812 First Place, Tulsa, Oklahoma 74103	
GPA Publication 2140 (1977) "Gas LPG Specification and Test Methods".	211.51; 211.82
GPA Publication 3132 (1974) "GPA Natural Gasoline Specifications and Test Methods".	211.82

Part 212 Mandatory petroleum price regulations

American Society for Testing and Materials	
1916 Race Street, Philadelphia, Pennsylvania 19103	
ASTM D 86-67 "Standard Method of Test for Distillation of Petroleum Products".	212.31
ASTM Standard D 910-70 "Standard Specifications for Aviation Guidelines".	212.31

10 CFR Chapter II (Parts 200–699)—Department of Energy—Continued

Part 212 Mandatory petroleum price regulations—Continued

American Society for Testing and Materials

	CFR Citation
ASTM Standard D 1655–74 "Standard Specification for Aviation Turbine Fuels".	212.31
ASTM Test Method D 2699–70 "Standard Method of Test for Knock Characteristics of Motor Fuels by the Research Method". Extension Granted to Feb. 1, 1981.	212.31
ASTM Test Method D 2700–70 "Standard Method of Test for Knock Characteristics of Motor and Aviation Type Fuels by the Motor Method". Extensions granted to Feb. 1, 1981.	212.31
Military Specifications	
Naval Publication and Forms Center, 5801 Tabor Road, Philadelphia, PA 19120	
MIL–T–5624 J "Department of Defense Military Specifications for Turbine Fuel, Aviation, Grade JP–4 and JP–5".	212.31

Part 420 State energy conservation plans

American Society of Heating, Refrigerating and Air Conditioning Engineers, Inc.
345 East 47th Street, New York, NY 10017

Standard 90, Energy Conservation in New Building Design, Sections 4–9 (Aug. 11, 1975).	420.2; 420.7

Part 430-Energy conservation program for consumer products

All standards incorporated into Part 430 are contained in Subpart B, Appendix A–O.

Association of Home Appliance Manufacturers
20 N. Wacker Drive, Chicago, IL 60606

AHAM HRF–2–ECFT—1975 Test Procedures to Determine the Temperature and Energy Consumption of Household Refrigerators, Combination Refrigerator-Freezers, and Freezers.

AHAM ER–4–MWO—1977 Performance Evaluation for Microwave Cooking Appliances.

AHAM ER–5–EC—1976 Proposed AHAM Standard Test Method for Measuring Energy Consumption of Electric and Gas Ovens and Surface Units and Microwave Ovens.

AHAM HWL–1, Dec. 1971 Household Washer Performance Evaluation Procedure. (ANSI Z 224.1–1971).

AHAM HLD–1, June 1974 Performance Evaluation Procedure for Household Tumble Type Clothes Dryers.

AHAM HLD–2EC, Dec. 1975 Test Method for Measuring Energy Consumption of Household Tumble Type Clothes Dryers.

AHAM HLW–2EC, Dec. 1975 Test Method for Measuring Energy Consumption of Household Clothes Washers.

AHAM HU–1—72, Appliance Humidifier Standard (ANSI Z 235.1–1972).

American National Standards Institute
1430 Broadway, New York, NY 10018

B38.1—1970, Method of testing for Household Refrigerators, Combination Refrigerator Freezers and Household Freezers.

B149.1—1972, Dhumidifiers .....

C16.13—1961, Monochrome Television Broadcast Receivers .....

C71.1—1972, Household Electric Ranges .....

C72.1—1972, ANS for Household Automatic Electric Storage-Type Water Heater.

Z11.182—1965 (R 1971), Standard Method of Test for Smoke Density in the Flue Gases from Distillate Fuels.

Z21.1—1974, As amended by Z21.1a—1974 and Z21.1b—1976—Household Cooking Gas Appliances.

Z21.10.1—1975, Gas Water Heaters .....

Z21.11.1—1974, ANS for Gas-Fired Room Heaters, Vol. 1, Vented Room Heaters.
Extension granted to Feb. 1, 1981.

Z21.13—1974, ANS for Gas-Fired Low Pressure Steam and Hot Water Heating Boilers.
Extension granted to Feb. 1, 1981.

Z21.44—1973, Gas Fired Gravity and Fan Type Direct Vent Wall Furnaces.

Z21.47—1978, Gas Fired Central Furnaces .....

Z21.48—1976, Gas Fired Gravity and Fan Type Floor Furnaces .....
Extension granted to Feb. 1, 1981.

Z21.49—1975, Gas Fired Gravity and Fan Type Vented Wall Furnace ....

10 CFR Chapter II (Parts 200–699)—Department of Energy—Continued

Part 430-Energy conservation program for consumer products—Continued

American National Standards Institute—Continued

	CFR Citation
Z91.1—1972, ANS Performance Requirements for Oil-Powered Central Furnaces.	
Z224.1—1971, Performance Evaluation Procedures for Household Washers.	
Z234.1—1972, Room Air Conditioners	
Z235.1—1972, Appliance Humidifier Standard (AHAM HU-1-72)	
Air-Conditioning and Refrigeration Institute	
1815 N. Fort Myer Drive, Arlington, VA 22209	
ARI 210—79, Standard for Unitary Air Conditioning Equipment	
ARI 240—77, Standard for Air-Source Unitary Heat Pump Equipment	
ARI 280—74, Standard for Central Forced-Air Electric Heating Equipment.	
ARI 320—76, Standard for Water Source Heat Pumps	
ARI 610—74, Standard for Central system Humidifiers	
American Society of Heating, Refrigerating and Air-Conditioning Engineers, Inc	
345 East 47th Street, New York, NY 10017	
ASHRAE Standard 16—69 Method of Testing for Rating Room Air Conditioners.	
ASHRAE Standard 37—78 Method of Testing for Rating Unitary Air Conditioning and Heat Pump Equipment. Extension granted to Feb. 1, 1981.	
American Society for Testing and Materials	
1916 Race Street, Philadelphia, PA 19103	
D396—78, Standard Specification for Fuel Oils	
D2156—65, Method of Test for Smoke Density in Flue Gases from Distillate Fuels (ANSI Z 11.182-1965 (R 1971)).	
Hydronics Institute	
35 Russo Place, Berkeley Heights, NJ 07922	
Testing and Rating Standards for Cast Iron and Steel Heating Boilers, Jan. 1977.	
International Electrotechnical Commission	
(Available from: American National Standards Institute, 1430 Broadway, New York, NY 10018)	
IEC Publication 335-25—1976 Method of Measuring Performance of Microwave Cooking Appliances for Household and Similar Purposes. Extension granted to Feb. 1, 1981.	
Underwriters' Laboratories, Inc.	
207 East Ohio Street, Chicago, IL 60611	
UL 729—1976, Std. for Safety: Oil-Fired Floor Furnaces	
UL 730—1974, Std. for Safety: Oil-Fired Wall Furnaces Extension granted to Feb. 1, 1981.	
UL 858—1974 Household Electronic Ranges	
UL 896—1973, Std. for Safety: Oil-Burning Stoves	
Part 436—Federal energy management and planning programs	
American Society of Heating, Refrigerating and Air-Conditioning Engineers, Inc.	
345 East 47th Street, New York, NY 10017	
Standard 93-77, Methods of Testing to Determine the Thermal Performance of Solar Collectors.	436.76
Part 440—Weatherization assistance for low-income persons	
An extension to Feb. 1, 1981 has been granted for all standards incorporated by reference in Part 440 to complete the review process under 1 CFR 51.13.	
Part 456—Residential energy conservation program	
American National Standards Institute	
1430 Broadway, New York, NY 10018	
ANSI/AAMA 1002.9—1977 Voluntary Specification for Aluminum Combination Storm Windows for External Applications.	456.813
ANSI/AAMA 1102.7—1977 Voluntary Specifications for Aluminum Storm Doors.	456.813
ANSI/ASTM B 152-79 Standard Specification for Copper Sheet, Strip, Plate, and Rolled Bar.	456.810
ANSI/ASTM B 446-75 Standard Specification for Nickel-Chromium-Molybdenum-Columbium Allow (UNSO6625) Rod and Bar.	456.810
ANSI/ASTM D 2156-65 (1975) ANSI Standard Method of Tests for Smoke Density in the Flue Gases from Distillate Fuels.	456.913
ANSI Z21.13-1977 Gas-Fired Low Pressure Steam Hot Water Heating Boilers..	456.814; 456.914

10 CFR Chapter II (Parts 200–699)—Department of Energy—Continued

Part 456—Residential energy conservation program—Continued

American National Standards Institute—Continued

	CFR Citation
ANSI Z21.20—1979 ANSI Standard for Automatic Gas Ignition Systems and Components.	456.814
ANSI Z21.47–1978 ANSI Standard for Gas-fired Central Furnaces	456.814; 456.914
ANSI Z21.59—Gas-fired High Pressure Steam and Hot Water Heating Boilers.	456.814
ANSI Z21.66–1978 ANSI Standard for Electrically-Operated Automatic Vent Damper Devices for Use with Gas-fired Appliances.	456.814; 456.914
ANSI Z21.67–1978 ANSI Standards for Mechanically-Actuated Automatic Vent Damper Devices for Use with Gas-fired Appliances.	456.814; 456.914
ANSI Z21.68–1978 ANSI Standard for Thermally-Actuated Automatic Vent Damper Devices for Use with Gas-fired Appliances.	456.814; 456.914
ANSI Z91.2–1976 Performance Requirements for Automatic Pressure Oil Burners of the Mechanical Draft Type.	456.814; 456.914
ANSI Z96.1–1978/UL 727 Oil-fired Central Furnaces	456.814
ANSI Z96.2–1974/UL 296 "Oil Burners"	456.814
ANSI Z96.3–1975/UL 726 "Oil-fired Boiler Assemblies"	456.814
ANSI/NWMA I.S. 2–73 "Industry Standard for Wood Windows"	456.813
ANSI/NWMA I.S. S–73 "Ponderosa Pine Doors"	456.813
American Society for Testing and Materials 1916 Race Street, Philadelphia, PA 19103	
ASTM C–177–76 "Standard Test Method for Steady State Thermal Transmission Properties by Means of the Guarded Hot Plate.	456.810
ASTM C–236–66 (Reapproved 1971) "Standard Test Method for Thermal Conductance and Transmittance of Built-up Sections by Means of the Guarded Hot Box".	456.810
ASTM C–516–75 "Standard Specification for Vermiculite Loose Fill"	456.806
ASTM C–518–76 "Standard Test Method for Steady State Thermal Transmission Properties by the Means of Heat Flow Meter".	456.810
ASTM C–520–65 (Reapproved 1975) "Standard Method for Density of Granular Loose-fill Insulation".	456.806; 456.807
ASTM C–570–72 "Specification for Oil and Resin Based Caulking Compound for Building Construction".	456.812
ASTM C–578–69 "Standard Specification for Preformed, Block-Type Cellular Polystyrene Thermal Insulation".	456.808
ASTM E–737–80 "Standard Practice for the Installation of Storm Windows, Replacement Windows, Multi-Glazing, Storm Doors and Replacement Doors".	456.911
ASTM C–755–73 "Standard Recommended Practice for Selection for Vapor Barriers for Thermal Insulation".	456.903
ASTM C–790–74 "Standard Recommended Practices for Use of Latex Sealing Compounds".	456.916
ASTM C–797–75 "Standard Recommended Practices and Terminology for Use of Oil- and Resin-Based Putty and Glazing Compounds".	456.916
ASTM C–804–75 "Standard Recommended Practices for Use of Solvent Release Type Sealants".	456.916
ASTM C–834–76 "Specification for Latex Sealing Compounds"	456.812
ASTM D–257–78 "Test for DC resistance or Conductance of Insulating Materials".	456.810
ASTM D–1622–63 (Reapproved 1975) "Standard Method of Test for Apparent Density of Rigid Cellular Plastics".	456.810
ASTM E–84–79B "Standard Test Method for Surface Burning Characteristics of Building Materials".	456.808; 456.809; 456.810; 456.812
ASTM E–96–66 (Reapproved 1972) "Standard Test Method for Water Vapor Transmission of Materials in Sheet Form".	456.805
ASTM E–119–79 "Standard Methods of Fire Tests of Building Construction and Materials".	456.906; 456.907
ASTM E–136–79 "Test for Non-Combustibility of Elementary Materials".	456.905; 456.906
ASTM E–283–73 "Standard Test Method for Rate of Air Leakage Through Exterior Windows, Curtain Walls and Doors".	456.813
ASTM E–576–76 "Standard Test Method for Dew/Frost Point of Sealed Insulating Glass Units in Vertical Position".	456.813
ASTM G–1–72 (Reapproved 1979) "Standard Recommended Practice for Preparing, Cleaning, and Evaluating Corrosion Test Speciments".	456.810
Building Officials and Code Administrators, International Inc. 17926 S. Halsted Street, Chicago, IL 60430	
BOCA Research Report No. 72–23	456.813
Environmental Protection Agency CERI–SB–53, Cincinnati, OH 45268	
EPA Report No. 600/2–75–069a "Guidlines for Residential Oil Burner Adjustments".	456.913

10 CFR Chapter II (Parts 200–699)—Department of Energy—Continued

Part 456—Residential energy conservation program—Continued

	CFR Citation
Federal Specifications	
Naval Publication and Forms Center, 5801 Tabor Avenue, Philadelphia, PA 19120	
HH-I-515D (6/78) "Insulation, Thermal (loose-fill for Pneumatic or Poured Application): Cellulosic or Wood Fiber".	456.803; 456.804; 456.805
HH-I-524B (11/72—Interim Amendment, 1/76) "Insulation, Board, Thermal (Polystyrene)".	456.808
HH-I-530A (1971 and Interim Amendment 3, 5/76) "Insulation, Board, Thermal (Polyurethane and Polyiscocynurate)".	456.809
HH-I-558B (1971 and Interim Amendment 3, 5/76) "Insulation Blocks, Boards, Blankets, Felts, Sleeving, and Pipe Fitting Coverings".	456.812
HH-I-573B (1968 and Interim Amendment, 1976) "Insulation Thermal, (Flexible Unicellular Sheet and Pipe Covering)".	456.812
HH-I-574B (1974 and Interim Amendment 1, 9/76) "Insulation, Thermal (Perlite)".	456.807
HH-I-585C (1974 and Interim Amendment 1, 9/76) "Insulation, Thermal (Vermiculite)".	456.806
HH-I-1030A (1973 and Interim Amendment 1, 9/76) "Insulation, Thermal (Mineral Fiber for Pneumatic or Poured Application)".	456.804; 456,805
HH-I-1252B (1976) "Insulation, Thermal Reflective (Aluminum Foil)"....	456.810
TT-S-001543A (1971) "Sealing Compound, Silicone Rubber Base (for Caulking, Sealing, and Glazing in Buildings and Other Structures)".	456.812
TT-S-00227E (1969 and Amendment 3, 10/70) "Sealing Compound, Elastomeric Type, Multi-Component (for Caulking, Sealing, and Glazing in Buildings and Other Structures)".	456.812
TT-S-001657 (COM-NBS) (1970) "Sealing Compound, Single Component Butyl Rubber Base, Solvent Release Type (for Buildings and Other Types of Construction)".	456.812
TT-S-00230C (COM-NBS) (1970 and Amendment 2, 10/70) "Sealing Compound, Elastomeric Type, Single-Component, (for Caulking, Sealing, and Glazing in Buildings and Other Structures)".	456.812
TT-C-00598C (COM-NBS) (1970) "Caulking Compound, Oil and Resin Type, (for Building Construction)".	456.812
TT-P-00791B (GSA-FSS) (1969 and Amendment 2, 1970) "Putty Linseed-Oil Type, (for Wood-Sash-Glazing)".	456.812
Fir and Hemlock Door Association	
Yeon Building, Portland, OR 92704	
FHDA 6-79 "Industry Standard for Douglas Fir, Western Hemlock, and Sitka Spruce Doors and Blinds"..	456.813
Department of Housing and Urban Development	
Office of Technical and Credit Standards, Room 6156, 451 Seventh Street, SW., Washington, DC 20410	
HUD Intermediate MPS Supplement 4930.2-1977 "Solar Heating and Domestic Hot Water Systems".	456.702; 456.703; 456.704
Department of Commerce, National Bureau of Standards	
Washington, DC 20234	
NBS/PS 26-70 "Rigid Polyvinyl-chloride Profile Extrusions".....	456.813
National Fire Protection Administration	
470 Atlantic Avenue, Boston, MA 02210	
NFPA-31-1978 "1978-National Fire Code," Standard for the Installation of Oil and Burning Equipment".	456.905; 456.906; 456.907; 456.909; 456.913
NFPA-54/ANSI Z223.1-1-1974 National Fuel Gas Code, Part I, "Installation of Gas Piping and Gas Equipment on Non-Industrial Premises".	456.905; 456.906; 456.907; 456.909; 456.914
NFPA-70-1978 "National Electric Code," 1978.....	456.914; 456.705
NFPA-211-1977 "National Fire Code" Standard for Chimneys, Fireplaces, and Vents.	456.905; 456.906; 456.907; 456.909; 456.912
Sandia Laboratory	
Environmental Research Division-5333, Albuquerque, NM 87185	
Sandia Laboratories Report SAND 77-1375-1978—Peformance Evaluation of Wind Energy Conversion Systems Using the Method of Bins".	456.705
Underwriter Laboratory	
Publication Stock, 333 Pfingston Road, Northbrook, IL 60612	
UL 599, 3rd Ed.-1975, Amendments through 1978 "Standard for Heat Pumps".	456.814

10 CFR Chapter II (Parts 200-699)—Department of Energy—Continued

	CFR Citation
Part 475 Electric and hybrid vehicle research, development, and demonstration project	
Society of Automotive Engineers 400 Commonwealth Drive, Warrendale, PA 15096	
SAE J227a, as revised Feb. 1976, Electrical Vehicle Test Procedure	475.3; 475.10; 475.11

12 CFR Chapter VII (Parts 700-799)—National Credit Union Administration

National Credit Union Administration
1776 G Street, NW., Washington, D.C. 20456

	CFR Citation
NCUA 8022—Accounting Manual for Federal Credit Unions (Jan. 1975 edition reprinted with changes in July 1980).	701.2(d)(1); 701.14(a)
NCUA 8001—Federal Credit Union Bylaws (August 1972 & Dec. 1977, July 1978, and August 1980 changes).	701.2(d)(2); 701.14(b)
NCUA 8009—Data Processing Guidelines for Federal Credit Unions (Sept. 1972).	701.2(d)(3); 701.14(c)

These documents are also available from:
NCUA Region I
441 Stuart Street, 6th Floor, Boston, MA 02116
NCUA Region II
New Federal Building, 228 Walnut Street, Box 926, Harrisburg, PA 17108
NCUA Region III
1365 Peachtree Street, N.E., Suite 500, Atlanta, GA 30367
NCUA Region IV
Federal Office Building, Room 704, 234 N. Summit Street, Toledo, Ohio 43604
NCUA Region V
515 Congress Avenue, Suite 1400, Austin, Texas 78701
NCUA Region VI
Two Embarcadero Center, Suite 1830, San Francisco, CA 94111

13 CFR Chapter I (Parts 100 to 199)—Small Business Administration

	CFR Citation
American National Standards Institute (ANSI) 1430 Broadway, New York, New York 10018	
American National Standard Specifications for Making Buildings and Facilities Accessible to and usable by, the Physically Handicapped (ANSI A-117.1—1980).	113.3-3(c)

14 CFR Chapter I (Parts 23, 25, 27, 29, 36, 91, 121, 127, 135)—Federal Aviation Administration, Department of Transportation

	CFR Citation
American National Standards Institute 1430 Broadway, New York, NY 10018	
IEC Publication No. 179, "Precision Sound Level Meters", (1973)	36, Appendix A, Section A36.3
IEC Publication No. 225, "Octave, Half-Octave, Third-Octave Band Filters Intended for the Analysis of Sounds and Vibrations", (1966).	36, Appendix A, Sec. A36.3
Department of Transportation 400 7th Street, S.W., Washington, D.C. 20590 Extensions granted to Feb. 1, 1981 for the following publications:	
Advisory Circular 20-110—Index of Aviation Technical Standard Orders.	
TSO-C77, "Gas Turbine Auxiliary Power Units" (May 20, 1963)	25.1522; 29.1522
TSO-C91, "Emergency Locator Transmitters". (October 21, 1971)	25.1415; 29.1415; 91.52; 121.339; 121.353; 135.167
TSO-C74, Airborne ATC "Transponder Equipment" (February 20, 1973).	91.24; 121.345; 127.123; 135.143
TSO-10b, "Aircraft, Altimeter, Pressure, Actuated, Sensitive Type" (September 1, 1959).	91.36; 127.103
TSO-C88, Automatic Pressure Altitude Dicitizer Equipment" (February 10, 1967).	91.36; 127.103
TSO-C92B, "Ground Proximity Warning-Glide Slope Deviation Alerting Equipment" (August 19, 1976).	121.360
International Civil Aviation Organization (Attention: Distribution Officer), P.O. Box 400, Succursale: Place de l'Aviation Internationale, 1000 Sherbrooke Street West, Montreal, Quebec, Canada, H3A 2R2	
Annex 2 to the Convention on International Civil Aviation, Rules of the Air, 6th Edition (1970), with amendments through Amendment 20 (August 1976).	91.1 and 135.3(b)

14 CFR Chapter I (Parts 23, 25, 27, 29, 36, 91, 121, 127, 135)—Federal Aviation Administration, Department of Transportation—Continued

	CFR Citation
Pratt & Whitney Aircraft Co.	
400 East Main Street, East Hartford, CT 06108	
Engineering Change No. 197707	11–SFAR 27, Sec. 14(b); 91–SFAR 27, Sec. 14(b).
Service Bulletin 2531	11–SFAR 27, Sec. 14(b); 91–SFAR 27, Sec. 14(b).
Service Bulletin 2417	11–SFAR 27, Sec. 14(b); 91–SFAR 27, Sec. 14(b).
Radio Technical Commission for Aeronautics (RCTA)	
2000 K Street, N.W., Washington, D.C. 20006	
RTCA Paper 23–63/DO–117 (March 14, 1963), "Standard Adjustment Criteria for Airborne Localizer and Glide Slops Receivers".	91, Appendix A, Para 3(a)
Society of Automotive Engineers, Inc.	
400 Commonwealth Drive, Warrenton, PA 15096	
SAE ARP 866A—Standard Values at Atmospheric Absorption as a Function of Temperature and Humidity for Use in Evaluating Aircraft Flyover Noise, (March 15, 1975).	36, Appendix A, Sec A36.9
U.S. Government Printing Office	
Washington, D.C. 20402, Superintendent of Documents	
ANC–18 Bulletin "Design of Wood Aircraft Structures" (June 1951, Second Edition).	23.613; 25.613; 27.613; 29.613.
Military Handbook MIL–HDBK–5C, Vol 1 & Vol 2 "Metallic Materials and Elements for Flight Vehicle Structures", (September 15, 1976, as amended through December 15, 1978).	23.613; 23.615; 25.693; 27.613; 29.613; 29.685.
Military Handbook MIL–HDBK–17A "Plastics for Aerospace Vehicles" (January, 1971).	23.613; 25.613; 27.613; 29.613.
Military Handbook MIL–HDBK–23A "Structural Sandwich Composites" (December 30, 1968).	23.613; 25.613; 27.613; 29.613.

14 CFR Chapter I (Part 39)—Federal Aviation Administration, Department of Transportation

(All Manufacturer's Service Bulletins in Airworthiness Directives are contained in 14 CFR 39.13. Manufacturer's Service Bulletins in Airworthiness Directives are available from the Manufacturer, or from the addresses listed at the end of this table.)

Extension for Manufacturer's Service Bulletins in Airworthiness Directives has been granted to March 1, 1981.

	CFR Citation
Manufacturer's Service Bulletins In Airworthiness Directives	39.13

Available for public inspection at:

Office of The Chief Council Rules Docket, Federal Aviation Administration, 800 Independence Avenue SW., Washington, D.C. 20590.

Available from:

New England Regional Office, 12 New England Executive Park, Burlington, Massachusetts

Eastern Regional Office, Federal Building, John F. Kennedy (JFK) International Airport, Jamaica, N.Y.

Southern Regional Office, 3400 Whipple Street, East Point, Georgia

Great Lakes Regional Office, 2300 East Devon, Des Plaines, Illinois

Central Regional Office, 601 East Twelfth Street, Kansas City, Missouri

Southwest Regional Office, 4400 Blue Mound Road, Ft. Worth, Texas

Rocky Mountain Regional Office, 10255 East 25th Avenue, Aurora, Colorado

Northwest Regional Office, FAA Building, 9010 East Marginal Way South, King County International Airport (Boeing Field), Seattle, Washington

Western Regional Office, 15000 Aviation Boulevard, Hawthorne, California

Alaskan Regional Office, 632 Sixth Avenue, Anchorage, Alaska

Pacific Asia Regional Office, 1833 Kolakoua Avenue, Honolulu, Hawaii

European Regional Office, Tour Madou Building 1, Place Madou, 1020 Brussels, Belgium

14 CFR Chapter I (Part 97)—Federal Aviation Administration, Department of Transportation

(All Standard Instrument Approach Procedures are contained in 14 CFR Part 97.)

Federal Aviation Administration

National Flight Data Center, 800 Independence Avenue SW., Washington, D.C. 20590

14 CFR Chapter I (Part 97)—Federal Aviation Administration—Department of Transportation

	CFR Citation
Standard Instrument Approach Procedures (SIAPS)	97

14 CFR Chapter I (Part 152)—Federal Aviation Administration—Department of Transportation

(All Advisory Circulars are contained in 14 CFR 152.11. Copies of FAA Advisory Circulars are available from the addresses listed at the end of this table.)

Federal Aviation Administration Advisory Circulars	
(a) Circulars available free of charge.	
	152
150/5100-12 Electron Navigational Aids Approved for Funding Under the Airport Development Aid Program (ADAP).	
150/5190-3A Model Airport Hazard Zoning Ordinance.	
150/5210-7A Aircraft Fire and Rescue Communications.	
150/5210-10 Airport Fire and Rescue Equipment Building Guide.	
150/5300-2C Airport Design Standards—Site Requirements for Terminal Navigational Facilities.	
150/5300-4B Utility Airports—Air Access to National Transportation.	
150/5300-6 Airport Design Standards—General Aviation Airports—Basic and General Transport.	
150/5300-8 Planning and Design Criteria for Metropolitan STOL Ports.	
150/5320-6B Airport Pavement Design and Evaluation.	
150/5320-10 Environmental Enhancement at Airports—Industrial Waste Treatment.	
150/5320-12 Methods for the Design, Construction, and Maintenance of Skid Resistant Airport Pavement Surfaces.	
150/5325-2C Airport Design Standards—Airports Served by Air Carriers—Surface Gradient and Line-of-Sight.	
150/5325-4 Runway Length Requirements for Airport Design.	
150/5325-6A Airport Design Standards—Effect and Treatment of Jet Blast.	
150/5325-8 Compass Calibration Pad.	
150/5335-1A Airport Design Standards—Airports Served by Air Carriers—Taxiways.	
150/5335-2 Airport Aprons.	
150/5335-3 Airport Design Standards—Airports Served by Air Carriers—Bridges and Tunnels on Airports.	
150/5335-4 Airport Design Standards—Airports Served by Air Carriers—Runway Geometrics.	
150/5340-1D Marking of Paved Areas on Airports.	
150/5340-4C Installation Details for Runway Centerline and Touchdown Zone Lighting Systems.	
150/5340-5A Segmented Circle Airport Marker System.	
150/5340-8 Airport 51-foot Tubular Beacon Tower.	
150/5340-14B Economy Approach Lighting Aids.	
150/5340-17A Standby Power for Non-FAA Airport Lighting System.	
150/5340-18 Taxiway Guidance Sign System.	
150/5340-19 Taxiway Centerline Lighting System.	
150/5340-20 Installation Details and Maintenance Standards for Reflective Markers for Airport Runway and Taxiway Centerlines.	
150/5340-21 Airport Miscellaneous Lighting Visual Aids.	
150/5340-22 Maintenance Guide for Determining Degradation and Cleaning of Centerline and Touchdown Zone Lights.	
150/5340-23A Supplemental Wind Cones.	
150/5340-24 Runway and Taxiway Edge Lighting System.	
150/5340-25 Visual Approach Slope Indicator (VASI) Systems.	
150/5345-1E Approved Airport Lighting Equipment.	
150/5345-2 Specifications for L-810 Obstruction Light.	
150/5345-3C Specification for L-821 Panels for Remote Control of Airport Lighting.	
150/5345-4 Specification for L-829 Internally Lighted Airport Taxi Guidance Sign.	
150/5345-5 Specification for L-847 Circuit Selector Switch, 5,000 Volt 20 Ampere.	
150/5345-7C Specification for L-824 Underground Electrical Cable for Airport Lighting Circuits.	
150/5345-10C Specification for L-828 Constant Current Regulators.	
150/5345-11 Specification for L-812 Static Indoor Type Constant Current Regulator Assembly; 4 KW and 7½ KW, With Brightness Control for Remote Operation.	
150/5345-12A Specification for L-801 Beacon.	

14 CFR Chapter I (Part 152)—Federal Aviation Administration—Department of Transportation

CFR Citation

150/5345-13 Specification for L-841 Auxiliary Relay Cabinet Assembly for Pilot Control of Airport Lighting Circuits.
150/5345-18 Specification for L-811 Static Indoor Type Constant Current Regulator Assembly, 4 KW; With Brightness Control and Runway Selection for Direct Operation.
150/5345-21 Specification for L-813 Static Indoor Type Constant Current Regulator Assembly; 4 KW and 7½ KW; for Remote Operation of Taxiway Lights.
150/5345-26A Specification for L-823 Plug and Receptacle, Cable Connectors.
150/5345-27A Specification for L-807 Eight-foot and Twelve-foot Unlighted or Externally Lighted Wind Cone Assemblies..
150/5345-28C Specification L-851 Visual Approach Slope Indicators and Accessories.
150/5345-36 Specification for L-808 Lighted Wind Tee.....
150/5345-39A FAA Specification for L-853, Runway and Taxiway Retroreflective Markers.
150/5345-42A FAA Specification L-857, Airport Light Bases, Transformer Housings, and Junction Boxes..
150/5345-43B FAA/DOD Specification L-856, High Intensity Obstruction Lighting Systems.
150/5345-44A Specification for L-858 Retroreflective Taxiway Guidance Sign.
150/5345-45 Lightweight Approach Light Structure.....
150/5345-46 Specification for Semiflush Airport Lights.....
150/5345-47 Isolation Transformers for Airport Lighting Systems.....
150/5345-48 Specification for Runway and Taxiway Edge Lights.....
150/5360-6 Airport Terminal Building Development with Federal Participation.
150/5360-7 Planning and Design Considerations for Airport Terminal Building Development.
150/5370-7 Airport Construction Controls to Prevent Air Water Pollution.
150/5370-9 Slip-Form Paving—Portland Cement Concrete.....
150/5370-11 Use of Nondestructive Testing Devices in the Evaluation of Airport Pavements.

(b) Circulars for sale.

150/5320-5B Airport Drainage; $1.30.....
150/5370-10 Standards for Specifying Construction of Airports; $7.25. ...
150/5390-1A Heliport Design Guide; $1.50.] .....

Address Table

FAA Distribution Unit, M-443.1, Department of Transportation Warehouse, 1725 15th Street NE., Washington, D.C. 20002
Airports Division, ANE-600, Federal Aviation Administration, 12 New England Executive Park, Burlington, Massachusetts 01803
Airports Division, AEA-600, Federal Aviation Administration, Federal Building, Room 329, John F. Kennedy International Airport, Jamaica, New York 11430
Airports District Office, ADO-NYC, Federal Aviation Administration, Colonial Building, 181 S. Franklin Avenue, Valley Stream, New York 11581
Airports District Office, ADO-HAR, Federal Aviation Administration, Terminal Building, Capital City Airport, New Cumberland, Pennsylvania 17070
Airports District Office, ADO-WASH, Federal Aviation Administration, 900 South Washington Street, Falls Church, Virginia 22046
Airports Field Office, Federal Aviation Administration, Route 9—Box 31-C, Beaver, West Virginia 25813
Airports Division, ASO-600, Federal Aviation Administration, 3400 Whipple Street, East Point, Georgia 30344
Airports District Office, ADO-ATL, Federal Aviation Administration, Suite C, Room 116, 1568 Willingham Drive, College Park, Georgia 30337
Airports District Office, ADO-MIA, Federal Aviation Administration, FAA/NWS Building, Miami International Airport, Miami, Florida 33159
Airports District Office, ADO-MEM, Federal Aviation Administration, 3973 Knight Arnold Rd., Suite 103, Memphis, Tennessee 38118
Airports District Office, ADO-JAN, Federal Aviation Administration, FAA Building—Municipal Airport, Jackson, Mississippi 39208
Airports Division, AGL-600, Federal Aviation Administration, 2300 East Devon Avenue, Des Plaines, Illinois 60018
Airports District Office, CHI-ADO, Federal Aviation Administration, 2300 East Devon Avenue, Des Plaines, Illinois 60018
Airports District Office, DET-ADO, Federal Aviation Administration, Building 358, Detroit Metropolitan Airport, Detroit, Michigan 48242

14 CFR Chapter I (Part 152)—Federal Aviation Administration—Department of Transportation

Airports District Office, MSP-ADO, Federal Aviation Administration, 6301 34th Avenue South, Minneapolis, Minnesota 55450

Airports Division, ACE-600, Federal Aviation Administration, Federal Building, 601 East 12th Street, Kansas City, Missouri 64106

Airports Division, ASW-600, Federal Aviation Administration, 4400 Blue Mound Road, Fort Worth, Texas 76131

Airports District Office, ASW-HOU-ADO, Federal Aviation Administration, Wm. P. Hobby Airport, 8800 Paul B. Koonce Dr., Houston, Texas 77061

Airports District Office, ASW-ABQ-ADO, Federal Aviation Administration, NWS/FAA Building, Albuquerque International Airport, P.O. Box 9253, Albuquerque, New Mexico 87119

Airports District Office, ASW-OKC-ADO, Federal Aviation Administration, FAA Building, Room 204, Wiley Post Airport, Bethany, Oklahoma 73008

Airports Division, ARM-600, Federal Aviation Administration, 10455 East 25th Avenue, Aurora, Colorado 80010

Airports Field Office, BIS-662, Federal Aviation Administration, 2000 Airport Road, Bismarck, North Dakota 58501

Airports Field Office, HLN-662, Federal Aviation Administration, FAA Building, Room 2, Helena County Airport, Helena, Montana 59601

Airports Division, ANW-600, Federal Aviation Administration, FAA Building, Boeing Field, King County International Airport, Seattle, Washington 98108

Airports Division, AWE-600, Federal Aviation Administration, 15000 Aviation Boulevard, Lawndale, California 90261

Airports Field Office, AWE-680, Federal Aviation Administration, 15000 Aviation Boulevard, Lawndale, California 90261

Airports Field Office, SFO-680, Federal Aviation Administration, 831 Mitten Road, Burlingame, California 94010

Airports Division, AAL-600, Federal Aviation Administration, Anchorage Federal Office Building, P.O. Box 14, 701 C. Street, Anchorage, Alaska 99513

Airports Division, APC-600, Federal Aviation Administration, Prince Jonah Kuhio Kalanianaole Bldg., 300 Ala Moana Boulevard, Honolulu, Hawaii 96813

Title 16—Chapter II (Parts 1000 To End)—CONSUMER PRODUCT SAFETY COMMISSION

American Association of Textile Chemists and Colorists (AATCC)
Post Office Box 12215, Research Triangle Park, North Carolina 27709

	CFR Citation
AATCC Test Method 124-1969, "Appearance of Durable Press Fabrics After Repeated Home Laundering".	1615.4; 1615.32; 1616.5; 1616.32; 1632.5

American National Standards Institute
1430 Broadway, New York, New York 10018

ANSI Standard C101.1-1971, "American National Standard for Leakage Current for Applicances".	1505.6(e)(3)(iv)
ANSI Z53.1-1971, "Safety Color Code for Marking Physical Hazards" ...	1402.4(a)(1)(i)
ANSI Z97.1-1972 or 1975, "Performance Specifications and Methods of Test for Safety Glazing Material Used in Buildings".	1201.7

American Society for Testing and Materials (ASTM)
1916 Race Street, Philadelphia, Pennsylvania 19103

ASTM C96.1-1964, "American Standard for Temperature Measurement Thermocouples, approved June 9, 1964..	1505.6
ASTM D256-73, "Test for Impact Resistance of Plastics and Electrical Insulating Materials", Method B, November 27, 1973.	1201.4
ASTM D785-65 "Standard Method of Test for Rockwell Hardness of Plastics and Electrical Insulating Materials", August 31, 1975, (Reapproved 1970).	1201.4
ASTM D790-71, "Standard Method of Test for Flexural Properties of Plastics", October 29, 1971.	1201.4
ASTM D1535-68, "Specifying Color by the Munsell System"	1402.4
ASTM D2565-70. "Standard Recommended Practice for Operating Xenon-Arc Type (Water Cooled) Light- and Water Exposure Apparatus for Exposure of Plastics", Procedure B, June 12, 1970.	1201.4
ASTM G-26-70, "Standard Recommended Practice for Light- and Water Exposure Apparatus (Xenon-Arc Type) for Exposure of Nonmetallic Materials," April 13, 1970, as augmented for plastics by ASTM.	1201.4

National Fire Protection Association
470 Atlantic Avenue, Boston, Mass. 02210

NFPA No. 70-1978, 1978 Edition of National Electrical Code, Article 400, Flexible Cords and Cables, pp. 70-230—70-241.	1505.5
NFPA No. 70-1971, 1971 National Electrical Code, Article 400, Flexible Cords and Cables, pp. 70-184—70-194.	1505.5

Title 16—Chapter II (Parts 1000 To End)—CONSUMER PRODUCT SAFETY COMMISSION

46 CFR—U.S. Coast Guard, Department of Transportation

The Director approves the following incorporations by reference from December 10, 1980 through September 30, 1981.

	CFR Citation
Compressed Gas Association, Inc. (CGA) 500 Fifth Avenue, New York, N.Y. 10036	
S-1.2, Pressure Relief Device Standards, Part 2—Cargo and Portable Tanks for Compressed Gases, 1979.	54.15-25
Inter-Governmental Maritime Consultative Organization (IMCO) IMCO Sales, New York Nautical Instrument and Service Corp., 140 West Broadway, New York, N.Y. 10013	
A.264 (VIII), Amendment to Chapter VI of the International Convention for the Safety of Life at Sea (Carriage of Grain), 1960, adopted 1973.	31.10-33; 93.20-5
Institute of Electrical and Electronics Engineers, Inc. (IEEE) 345 East 47th Street, New York, N.Y. 10017	
IEEE Std 45-1977 IEEE Recommended Practice for Electric Installations on Shipboard.	167.40-1
Tubular Exchanger Manufacturers Association, Inc. 707 Westchester Avenue, White Plains, N.Y. 10604	
Mechanical Standards for Heat Exchangers, Class "B," "C," or "R," 1978.	54.01-2
Underwriters Laboratories (UL) 333 Pfington Rd., Northbrook, Ill. 60062	
UL-595, Marine-Type Electric Lighting Fixtures, 1979	183.01-15; 183.10-20

[FR Doc. 80-39745 Filed 12-30-80; 8:45 am]

BILLING CODE 6820-26-M

federal register

Wednesday
December 31, 1980

Part III

Environmental Protection Agency

Noise Emission Standards for Transportation Equipment; Motorcycles and Motorcycle Exhaust Systems; Final Rule

ENVIRONMENTAL PROTECTION AGENCY

40 CFR Part 205

[N-FRL—1517-8]

Noise Emission Standards for Transportation Equipment; Motorcycles and Motorcycle Exhaust Systems

AGENCY: U.S. Environmental Protection Agency (EPA).

ACTION: Final rule.

SUMMARY: The Environmental Protection Agency (EPA) hereby establishes noise emission standards for newly manufactured motorcycles and motorcycle exhaust systems. This action is taken under the authority of the Noise Control Act of 1972 (42 U.S.C. 4901 et seq.). The regulation also incorporates an enforcement program which includes production verification requirements, selective enforcement auditing, compliance labeling, provisions for maintenance instructions, and anti-tampering provisions.

The Administrator has determined that the standards are feasible and represent those noise limits requisite to protect the public health and welfare taking into account the magnitude and conditions of use of the products, the degree of noise reduction achievable through the application of the best available technology, and the cost of compliance as required by Section 6(c)(1) of the Noise Control Act.

Compliance with the standards is expected to cause an average 5 decibel reduction in noise levels of new street motorcycles and a 2 to 7 decibel reduction in noise levels of new off-road motorcycles by 1986. In addition the standards for motorcycle exhaust systems are expected to cause significant reductions in motorcycle noise impact by controlling the availability of ineffective motorcycle exhaust systems. Without establishing these noise standards, the public's health and welfare would continue to be adversely affected by high levels of motorcycle noise. Lowering motorcycle noise levels is expected to result in approximately a 55–75 percent reduction in interference with human activities, and a 7–11 reduction in the extent and severity in overall traffic noise impact.

EFFECTIVE DATES: Effective January 1, 1983, all street and off-road motorcycles with an engine displacement of 170 cc and less manufactured after this date must not emit a noise level (A-weighted) in excess of 83 decibels (dB) when measured in the manner prescribed in the regulation; the not-to-exceed level is reduced to 80 decibels for vehicles manufactured after January 1, 1986. All off-road motorcycles with an engine displacement greater than 170 cc manufactured after January 1, 1983, must not emit a noise level in excess of 86 decibels; this not-to-exceed level is reduced to 82 decibels for vehicles manufactured after January 1, 1986. All moped-type street motorcycles manufactured after January 1, 1983 must not emit a noise level in excess of 70 decibels.

After the effective dates, all original equipment and replacement exhaust systems designed to be installed on Federally-regulated motorcycles must not cause those motorcycles to exceed the noise emission standards above.

ADDRESS: A copy of the Regulatory Analysis can be obtained from Mr. Charles Mooney, U.S. Environmental Protection Agency, EPA Public Information Center (PM-215), Room 2194 D—Waterside Mall, Washington, D.C. 20460.

FOR FURTHER INFORMATION, CONTACT: Mr. Fred Newberry, Project Officer, Standards and Regulations Division (ANR 490), U.S. Environmental Protection Agency, Washington, D.C. 20460; or phone (202) 557-7666.

SUPPLEMENTARY INFORMATION:

1.0 Introduction

On March 15, 1978, EPA proposed noise standards for newly-manufactured motorcycles and motorcycle exhaust systems (43 FR 10822). The purpose of the present notice is to establish final noise emission standards for motorcycles and motorcycle exhaust systems by adding Subpart D and Subpart E to amend Part 205 of Title 40 of the Code of Federal Regulations.

The legal basis and factual conclusions which support promulgation of this regulation were set forth in substantial detail in the proposed rule. In addition the Agency solicited public participation and established a comment period from March 15, 1978 through June 14, 1978. During this time, issues related to the proposed regulation were addressed in public hearings held in Anaheim, California, April 28–May 1, 1978; in St. Petersburg, Florida, May 5, 1978; and in Washington, D.C. May 9, 1978. All public comments submitted with respect to the proposed regulation have been given careful review and consideration. As a result a number of changes have been made to the regulation as proposed. The principal issues that emerged from the public comments, EPA's responses, and the resulting changes to the proposed regulation are discussed in § 3.0. Other changes to the proposed regulation are discussed in § 4.0.

All questions, comments, and issues raised in the public testimony and in written submissions to the docket, as well as other information supporting the regulation, are addressed in detail in the EPA document accompanying this rulemaking entitled "Regulatory Analysis of the Noise Emission Regulations for Motorcycles and Motorcycle Exhaust Systems."

Materials relevant to this rulemaking, as well as the written comments received during the comment period and transcripts of the public hearings, are available to the public at the EPA Headquarters Public Information Center, 401 M Street, SW., Washington, D.C. 20460. Transcripts of the public hearings are also available for inspection at each of EPA's 10 regional offices.

2.0 Summary of the Regulation

The regulation establishes noise emission standards for newly manufactured motorcycles and motorcycle exhaust systems. EPA evaluated several test procedures for measuring motorcycle noise and concluded that a test procedure developed by modifying the SAE J-331a test is the most appropriate for the final rule. This test procedure measures noise emissions of motorcycles under full throttle acceleration at specified percentages of the motorcycle's maximum rated engine speed, and at a fixed point in relation to a microphone location. For a comprehensive description of the test procedures, refer to Appendix I of the regulation. A detailed technical discussion is in the Regulatory Analysis.

Table 2-1

[Motorcycle Standards and Effective Dates]

Motorcycle type	Not-to-exceed a-weighted noise level (dB)	Effective date
1. Street Motorcycles	83	Jan. 1, 1983.
	80	Jan. 1, 1986.
2. Moped type street motorcycles.	70	Jan. 1, 1983.
3. Off-road motorcycles:		
a. Displacement 170cc and below.	83	Jan. 1, 1983.
	80	Jan. 1, 1986.
b. Displacement more than 170 cc.	86	Jan. 1, 1983.
	82	Jan. 1, 1986.

Effective on the dates listed, newly manufactured motorcycles must not produce noise levels in excess of those listed in Table 2-1 for a specified period, when tested and evaluated according to the methodology provided in Appendix I of Subpart D and E.

After the above effective dates original equipment and replacement exhaust systems designed and installed on Federally-regulated motorcycles shall not cause those motorcycles to produce noise levels in excess of the new vehicle standards listed in Table 2-1.

To ensure lasting benefits from this regulation, the Agency requires that manufacturers design and build each product so that, when properly maintained and used, its noise level will not degrade (increase) above the applicable levels in Table 2-1 for a specified period of time or use, from the date of the product's sale to the ultimate purchaser. This period is called the Acoustical Assurance Period (AAP). For street motorcycles and street motorcycle exhaust systems the AAP is 1 year or 6,000 km (3,730 mi.), whichever occurs first. The AAP for off-road motorcycles and off-road motorcycle exhaust systems is 1 year or 3,000 km (1,865 mi.), whichever occurs first.

In §§ 205.162-4 of Subpart D and 205.173-5 of Subpart E, a manufacturer must establish records regarding the anticipated increase in the noise level of his product during the AAP. These records may consist of a statement of engineering judgment, the results of durability testing or other information which the manufacturer deems adequate to support the fact that his products comply with the standard for the AAP.

Under the authority of Section 15 of the Act, § 205.152 of this regulation specifies the levels for a product to qualify as a Low Noise Emission Product (LNEP). Effective January 1, 1982, the following LNEP levels are specified: 75 dB for off-road motorcycles with engine displacements greater than 170 cc; 73 dB for street motorcycles with engine displacements greater than 170 cc; 71 dB for street motorcycles and off-road motorcycles with engine displacements 170 cc and lower; and 60 dB for moped-type street motorcycles. Effective January 1, 1989, the LNEP level for street motorcycles with engine displacements greater than 170 cc is lowered to 71 dB.

The regulation also incorporates an enforcement program which includes production verification requirements, selective enforcement auditing, compliance labeling, provisions for maintenance instructions, and anti-tampering warnings to consumers.

3.0 Discussion of Major Issues and Resolutions

The following is a summary of the major issues raised in the public hearings and in the written submissions during the public comment period, and the Agency's decision on those issues. See the Docket Analysis for a detailed discussion of all the substantive issues raised by the commenters.

3.1 Issue

What should be the most stringent noise standard for street motorcycles?

Comments

Several motorcycle manufacturers and motorcycle trade groups commented that they were strongly in favor of Federal regulations at the 83 dB level which would preempt state and local regulations, but argued that the increased costs of meeting the 80 and 78 dB levels were not justified by the increased health and welfare benefits. Most state and local governments urged EPA to adopt standards at least as stringent as 78 dB.

Decision

EPA has set 80 dB as the most stringent noise standard for street motorcycles. In examining this issue the Agency recognized four factors, (1) that motorcycles are a major source of noise in the environment and regulations to restrict their noise must be issued, pursuant to the statute, if feasible; (2) Federal action is essential for motorcycle noise because of a number of differing state and local standards on new motorcycles impacting on commerce, thus necessitating national uniformity of treatment; (3) a major part of the national motorcycle noise problem can be attributed to the offering for sale and subsequent use of aftermarket exhaust systems which cause the otherwise conforming motorcycle to make substantially more noise than when the motorcycle was first offered for sale; and (4) that primary responsibility for control of noise rests with state and local governments, and therefore the Federal government's actions should complement and aid, where practicable, the efforts of state and local governments to meet their responsibilities.

Studies indicate that the 78 dB level is representative of best available technology. Although the 78 dB standard is affordable, cost effectiveness at the 78 dB level diminishes markedly from the 80 dB level. After a product has been identified as a major source of noise, Section 6(c) of the Act requires EPA to set noise levels requisite to protect public health and welfare taking into account the extent to which it is operated in the presence of other noise sources, what is achievable through application of best available technology and the cost of compliance. As mentioned above studies indicate that the level representative of "best available technology" for street motorcycles is 78 dB as measured by the proposed test procedure. No significant differences in quieting technology appear to exist between large and small motorcycles at this level so subcategorization of street motorcycles was not pursued. The 78 dB not-to-exceed regulatory level (estimated to require 76 dB production level motorcycles) would have probably required liquid cooling or other major engine changes for many motorcycles above 200 cc displacement. These changes would have also resulted in weight increases, performance penalties, and some styling difficulties as well as an increase in purchase prices (sales-weighted estimated 8% or $120). Aftermarket replacement (Non-OEM) exhaust systems which would have been manufactured to comply with regulations at a 78dB level would be expected to lose performance and styling advantages over the original equipment and have purchase prices rise about 50% ($60 increase). Similar performance and styling penalties are also expected for these exhaust sytems at the 80 dB level. However, purchase prices should now rise about 25% or $30.

Although most manufacturers have expressed opposition to a 78 dB standard, most also stated during the public comment period that they were in favor of the Federal regulations since they will provide preemption against the states and localities regulating this industry, thereby providing national uniformity of treatment. Many states and localities have such motorcycle noise ordinances now and, in some cases, have regulations projected to the future which are more stringent than the 80 dB standard, which EPA is promulgating under this rulemaking, or the 78 dB standard that was proposed.

A large part of the current motorcycle noise problem is attributable to vehicles with modified exhaust systems. This is demonstrated in Table 1 which compares the benefits of increasingly stringent noise standards for newly manufactured motorcycles and the benefits of reducing the percentage of motorcycles with modified exhaust systems.

An initial standard is necessary to implement the replacement exhaust system standards, and the labeling and anti-tampering provisions of the regulations as rapidly as possible (most new street motorcycles currently being produced already meet the 83 dB level). These provisions, together with the non-availability of noisy replacement exhaust system for new motorcycles, are

expected to lower the rate of exhaust system modifications from the current 12% of the motorcycle population of 7%. This is expected to result in a total reduction in noise impact at the 83 dB level of 17–36% (See Table 1). It is believed that more effective enforcement programs at the state and local level which make use of the labeling and the anti-tampering provisions in these regulations could reduce the incidence of exhaust system modifications to as low as 3% of the motorcycle population. This would be expected to bring a total 24–62% reduction in impact at the 83 dB level.

After the initial 83 dB standard for new motorcycle and replacement exhaust systems has been established, any further reduction in noise impact must come either from such reduction in the rate of exhaust modifications or from further reducing the noise levels of newly manufactured motorcycles. The benefit to be derived from an 80 dB standard, regardless of the level of exhaust modifications, is an additional 24% reduction in impact. At 78 dB there would have been an additional 8% reduction.

Table 1.—*Benefits and Costs*

EPA regulatory level	Reduction in impact [1]			Motorcycle price increase	Total annualized cost [5]
	With current 12% modifications [2]	With current 7% modifications [3]	With current 3% modifications [4]		
83 dB	4–9%	17–36%	24–62%	6 (0.3%)	$12 M
80 dB	15–43%	47–56%	61–75%	36 (2.0%)	94 M
78 dB	22–57%	53–67%	78–83%	120 (7.6%)	218 M

[1] Percentage reduction in noise impact shown here apply to interferences with human activities. The range of values is attributable to differences in the impact of the regulation on various types of human activities (e.g., sleep, speech.) These measurements are used as an indicator of people's adverse reaction to noise intrusions.

[2] Effect of reducing noise level of new motorcycles only.

[3] Combined expected effect of exhaust system regulations, tampering and labeling provisions, and new motorcycle standards.

[4] With effective program at the state and local level.

[5] 1978 dollars.

Compared to the incremental benefits achievable through strong enforcement efforts at the state and local level the incremental benefits of setting a 78 dB standard over an 80 dB standard are small. Before the 80 dB level was selected as the final standard, the Agency had already started directing considerable efforts to working with states and localities under the Quiet Communities Act to establish complementary programs. EPA is hopeful that, through these and continued efforts, the additional projected reduction in modifications will be possible, although the Act gives EPA no authority to require communities to adopt and then enforce complementary ordinances. However, even if such a further reduction in modifications is not forthcoming, the 80 dB standard is expected to achieve at least a 33% reduction in motorcycle noise impact.

The Agency also considered the cost-effectiveness of a 78 dB level as compared to an 80 dB level. Namely, if the projected reduction in the number of modified motorcycles due solely to the Federal regulation is achieved, about 90% of the benefits provided by a 78 dB standard could be achieved by an 80 dB standard at less than one-half the costs, as shown in Table 1. It is not surprising, of course, that the marginal costs go up as standards become more stringent. This is a natural consequence of the way in which manufacturers are expected to apply noise abatement techniques. First, the manufacturers will apply those noise abatement techniques which can be done with least expense. Then the manufacturers will apply the next most expensive techniques and so on, until they achieve the necessary noise level reduction. A 78 decibel regulation would have made motorcycles cost an average of eight percent more while the price increase for motorcycles at the 80 dB level will be about two percent.

EPA also examined whether setting a 78 dB standard rather than an 80 dB standard with the associated increased performance losses would have been accompanied by an increased incidence in consumer modification of the exhaust system to regain performance, thereby more than offsetting the projected additional health and welfare benefits. The motorcycle exhaust system regulation will make it illegal to manufacture or sell non-complying exhaust systems for regulated motorcycles, thereby precluding many of the consumer modifications. Of course, some motorcyclists may buy exhaust systems for pre-regulation motorcycles and install them on their regulated motorcycles. Others may use straight pipes or attempt to remove the baffles from the complying exhaust system. It is possible that more consumers would have made such modifications to their exhaust system at a 78 dB level than at an 80 dB level in an attempt to regain any associated loss of performance. In any event, setting the final standard at 80 dB decreases the risk that such modifications might increase.

The Agency also examined the potential impact of the regulations on motorcycle manufacturers. Most motorcycle manufacturers are expected to meet the 80 dB level with little difficulty. Harley-Davidson has indicated that, although they can build a motorcycle which can meet a 78 dB standard, to do so they would have been forced to drop their air-cooled V-twin engine upon which their current unique niche in the market is substantially based. Thus, a 78 dB standard would have posed a serious marketing problem for Harley-Davidson. For Bombardier of Canada and many of the European manufacturers, a 78 dB standard could have caused some of them to discontinue exporting some of their models of street motorcycles to the U.S.

Although the primary responsibility for control of noise rests with state and local governments, the Agency plans to assist states and localities by effectively enforcing these regulations as to manufacturers of motorcycles and aftermarket exhaust systems, and providing them with strong support for adopting complementary programs. As mentioned earlier, the Agency is already directing considerable efforts to working with states and localities under the Quiet Communities Act. EPA believes that through such efforts, the projected reductions in aftermarket exhaust system modifications (Table 1) will be possible, resulting in significant health and welfare benefits at the 80 dB level.

The Agency also believes it needs to be cognizant of the fact that, with the preemptive features of the Act, it is taking away the state and local jurisdictions' power to regulate manufacturers and must in return make sure the Federal regulations are sufficiently stringent. In the latest amendments to the Noise Control Act, Congress expressed some real concern about the extent to which the Agency was preempting states and localities without providing them protection comparable to that which they could

provide themselves. Congress added a provision in 1978 which will allow states to petition EPA for more stringent standards, should the Agency set ones which are less stringent than they would like.

The Agency believes, as discussed above, that a large part of the current motorcycle noise problem can be attributed to vehicles with modified exhaust systems. To give the public relief from this noise problem the Agency is issuing these regulations with provisions to control the number of modified notorcycles, in addition to setting noise limits on newly manufactured motorcycles. The regulations will not only provide for national uniformity of treatment for manufacturers, but will also assist states and localities in their efforts in reducing the number of modified motorcycles.

In conclusion, although a 78 dB standard is affordable, we believe that 80 dB represents a more reasonable choice for the Agency. The costs of reaching a 78 dB standard are twice the costs of the 80 dB standard. Although this factor, standing alone, would not necessarily cause EPA to select 80 dB as the final standard, this in combination with other factors argues for an 80 dB level. Specifically, an 80 dB standard will avoid much of the performance penalties and the resulting possibility of increased consumer modifications at the 78 dB level, and will also avoid the potential economic dislocation to Harley-Davidson and foreign manufacturers discussed above. Moreover, ther 80 dB standard retains 90% of the benefits compared to the 78 dB level. EPA intends to further maximize the benefits of the 80 dB standard with a vigorous Federal enforcement effort and support for complementary state and local programs aimed at reducing the rate of modifications. In these circumstances, EPA has decided to set 80 dB as the most stringent noise standard for street motorcycles.

The Agency believes that to make these regulations highly effective, it will need additional support from the motorcycle public. EPA solicits the sincere efforts of the motorcycle industry including motorcycle and exhaust system manufacturers, distributors and dealers, motorcycle trade associations, motorcyle enthusiast associations, and motorcycle publications, to work with EPA, states, and communities to discourage illegal modifications to motorcycle exhaust systems. For example, in advertisements and elsewhere, the quietness of new motorcycles and replacement exhaust systems could be promoted as a positive factor. Trade associations and other interested parties could support public awareness programs to increase the sensitivity of motorcyclists to the viewpoint that excessive noise is an unwanted intrusion to the community and a public relations problem for motorcyclists and the motorcycle industry. Also, the motorcycle manufacturers could warn their dealers against offering for sale or installing illegal exhaust systems. The motorcycle manufacturers could provide salient warnings to purchasers that their warranty is voided by improper modifications. Peer pressure against making modifications which increase a motorcycle's noise level could also go a long way toward reducing this problem. Finally, the industry could work closely with states and localities in the design and implementation of fair and effective local noise control ordinances aimed at reducing illegal modification of these vehicles.

3.2 Issue

What should be the final-step standard for off-road motorcycles?

Comments

Several manufacturers commented that the proposed standards for off-road motorcycles are too stringent and will result in performance penalties. Manufacturers and trade associations questioned the Agency's justification for setting different standards for small and large displacement off-road motorcycles. One manufacturer stated that small off-road motorcycles are more difficult to quiet than large off-road motocycles because the smaller motorcycles have greater sensitivity to weight increases and less space for modifications. State and local governments and several interest groups, on the other hand, argued that the large off-road motorcycles should have to meet the same standards as street motorcycles and small off-road motorcycles. The statutory requirements, as discussed for street motorcycles, will apply here as well.

Decision

The standards proposed by the Agency for small and large off-road motorcycles are based on technology, cost, and health and welfare considerations. The Agency still finds that small displacement off-road motorcycles require substantially different degrees of treatment to reach reduced noise levels, with substantially lower costs and performance penalties then large displacement motorcycles. The factors discussed above in support of the 80 dB standard for street motorcycles apply here, as well.

The Agency has reason to believe that small off-road motorcycles, the most populous class of off-road motorcycles, are more likely to be operated in and around urban fringe areas where noise level reductions and significant noise impact relief could be achieved at a 78 dB or an 80 dB level. Although some small off-road motorcycles already meet the proposed levels, small displacement semi-competition models often exceed 90 dB.

The 82 dB regulatory level is selected for large off-road motorcycles because technology is available at reasonable costs with acceptable associated performance penalties. Studies indicate that levels stricter than 82 dB for large off-road motorcycles would exact severe performance penalties that would have a substantial impact on the character of the sport of off-road motorcycling as it is known today. Stricter levels could also increase the tendency of users either to modify their off-road motorcycles or to abuse the intended distinction between genuine competition and non-competition motorcycles by using uncontrolled competition off-road motorcycles for recreational riding.

Since some new off-road motorcycles are extremely loud, any reasonable Federal regulation, with its tampering, replacement muffler and labeling provisions, can help reduce the impact of off-road motorcycling noise considerably. However, even with the most stringent Federal noise standards for large off-road motorcycles, incompatible land use will continue to exist, and restrictions on the use of off-road motorcycles in wilderness areas and in residential areas will still be necessary in many jurisdictions.

3.3 Issue

Are the proposed lead times sufficient?

Comments

Several motorcycle manufacturers and two motorcycle trade associations reported that the proposed lead times are too short, making compliance with the standards difficult and possibly unattainable. A motorcycle interest group commented that the proposed lead times are very generous. A citizen's group against noise suggested lead times are more stringent than the proposed lead times.

Decision

The Agency has extended the compliance lead times in response to the industry comments. Since the replacement exhaust system standards

and tampering and labeling enforcement tools in these regulations are expected to have the largest initial impact in reducing motorcycle noise, an initial, essentially status quo standard of 83 dB for street motorcycles and small off-road motorcycles (engine displacement 170 cc and less) and an 86 dB standard for large off-road motorcycles (engine displacement greater than 170 cc) will go into effect as quickly as possible (January 1, 1983). Most of these motorcycles already meet this level, although a few will need limited additional quieting.

Based on submissions during the public comment period, the short lead times (three years for the 80 dB standards and 6 years for the 78 dB standard) in the proposed rule could pose problems for AMF/Harley-Davidson, the only major U.S. manufacturer, and for other smaller motorcycle manufacturers (mostly European). Similarly, some manufacturers of large off-road motorcycles contended that the 82 dB standard would be difficult to meet in a three year lead time. In the final rule, street motorcycles and small off-road motorcycles will be required to meet the 80 dB standard, effective Janaury 1, 1986 (five years lead time.) Large off-road motorcycles (engine displacement greater than 170 cc) will be required to meet an initial standard of 86 dB, effective January 1, 1983, and a final standard of 82 dB, effective January 1, 1986 (5 years lead time). The standards can be achieved by the four largest manufacturers in the industry (all Japanese—accounting for 90% of the U.S. market) on an orderly basis. The standards are achievable by the smaller manufacturers provided they are willing to make the necessary investments in research and development to redesign their engines. For these manufacturers the extended effective dates should allow them ample time to develop, retool, and manufacture their redesigned, complying products.

It is relevant that several States, with more stringent standards than the Federal standards, have given the motorcycle industry notice that quieted products would be required by them in the near future, assuming Federal standards were not issued. Thus, the industry has known for several years that increasingly more stringent noise levels would be required in the 1980's.

3.4 Issue

Should the stationary test value on the motorcycle label be used as the noise standard by replacement exhaust system manufacturers?

Comments

Several exhaust system manufacturers commented that the correlation between stationary tests and pass-by tests is poor. One manufacturer stated that exhaust system manufacturers will be forced to use the pass-by test procedure to demonstrate compliance because of the poor correlation of the stationary test.

Decision

The Agency agrees that the poor correlation of the proposed F50 stationary test with the proposed pass-by test makes the use of the F50 label value as a standard for exhaust system manufacturers undesirable. In reviewing the test data, EPA found that an F50 test, which shows that an aftermarket system exceeds the level on the motorcycle label, provides no assurance that the aftermarket system fails to comply with the Federal pass-by standard. Likewise, an F50 test, which shows that an aftermarket system complies with the level on the F50 label on the motorcycle, provides inadequate assurance that the aftermarket system complies with the Federal pass-by standard. This lack of correlation argued against the adoption of this scheme in the final rulemaking.

The purpose of the proposed F50 test was to provide a means by which manufacturers could certify that their exhaust systems meet the Federal standard, using a less complicated and less expensive test procedure than the Federal pass-by test procedure. The Agency investigated the possible substitution of a high-correlation stationary test for the F50 test. A significant amount of work towards the development of such a test procedure has been done. This test is called the "stationary ignition disable," or SID, test procedure.

The preliminary study of the feasibility of such a test was conducted by McDonnell Douglas under contract to EPA prior to the publication of the proposed regulation. The results of that study were summarized in Appendix J of the Background Document for the proposed regulation. The data were encouraging, showing a correlation coefficient with the pass-by test procedure of .97 to .98. This stationary test procedure differs substantially from the F50 stationary test procedure. The F50 test procedure is a static test in which the motorcycle engine is run at a constant 50% of max rated RPM for the noise measurement. The SID test, on the other hand, requires that the motorcycle engine be accelerated at full throttle to the same closing RPM as is required in the pass-by test. This is conducted with the motorcycle in a stationary position and the transmission in neutral.

Prior to publication of the proposed regulation, consideration was given to proposing this SID test as the Federal test procedure. However, the availability of only relatively limited data, and the inexperience with this test procedure, and its possible limitations caused the Agency to ask for comment on the procedure in the proposed regulation while not formally proposing it for regulatory compliance.

Because the subsequent comments indicated significant problems with the F50 test procedure, the Agency further investigated the SID test. Improved "ignition disable" instrumentation was developed by EPA for a special evaluation of this test procedure. The results of this evaluation were encouraging but the instrumentation for the test procedure required further refinement to be useful to small replacement exhaust system manufacturers and to state and local enforcement agencies. In addition, several of the motorcycles in the test program were not compatible with the instrumentation for the SID test procedure. These problems remain to be solved.

The Agency encourages further work towards the development of a suitable stationary test by voluntary consensus standards organizations, or by manufacturers or manufacturer associations which may see potential cost savings in doing so. EPA would consider adopting such a stationary test procedure in the future, in addition to or in lieu of the Federal pass-by test procedure for motorcycles and replacement exhaust systems, if adequate correlation can be demonstrated and the test is compatible with all types of motorcycles. Section 205.167 was added to Subpart E of the final rule to provide for the Agency's consideration of alternative test procedures.

The Agency also recognizes that a stationary test procedure with good correlation to the Federal pass-by procedure is desirable for use by state and local governments in enforcing against illegal modifications and in identifying those motorcycle exhaust systems which degrade rapidly in their noise attenuation capability. Also, the Agency is interested in using a stationary test procedure in surveillance testing of products in use. Namely, the stationary test would be used to screen products in use for subsequent testing by the Federal pass-by procedure to determine compliance during the Acoustical Assurance Period. The Agency has already done preliminary

work on a stationary test procedure and welcomes the participation of other interested parties in the continued development of a suitable procedure.

Because no currently available stationary test shows adequate correlation with the Federal pass-by test procedure, the final rulemaking requires the exhaust system manufacturers to use the Federal pass-by test procedure to demonstrate compliance with the standards. EPA anticipates that most of the aftermarket exhaust system manufacturers will have to hire an independent contractor with the required facility to conduct the testing. The Federal pass-by procedure is not a highly complicated test procedure requiring special "test facilities." Rather, the only major additional requirement of the pass-by test over a stationary test is a 50 foot by 100 foot flat section of pavement. The cost difference between using a short test and using the Federal pass-by test is expected to cause a 1 to 2 percent price increase in replacement exhaust systems.

3.5 Issue

Should motorcycle manufacturers be required to label their motorcycles with F50 stationary test values for use by state and local officials to detect tampering and the use of ineffective or faulty exhaust systems. (Note: The previous issue addressed only the use of the F50 test by exhaust system manufacturers for demonstrating compliance with the Federal standards.)

Comment

Two motorcycle trade associations questioned the usefulness of the stationary test values on the motorcycle label because of correlation difficulties. One representative of a state government commented that the F50 stationary test value stamped on the motorcycle frame only applies to the original equipment muffler. Further, he commented that unless the F50 labeling scheme is linked to the exhaust rather than to the motorcycle, in-use enforcement will not be workable. Many commented that the label needed to be simplified.

Decision

The primary purpose of the F50 label was to provide a guide for State and local in-use enforcement in their efforts to detect tampering and the use of ineffective or faulty exhaust systems. In the proposed regulation, we proposed that the motorcycle manufacturers label each of the motorcycles that they sell with a F50 value that corresponds to that particular model of motorcycle. However, the Agency agrees that this F50 value is correct only for the original equipment manufacturer's (OEM) exhaust system. Our tests show that motorcycles with aftermarket exhaust systems, even though those systems may in fact not cause that motorcycle to exceed the Federal pass-by standard, can have F50 levels considerably in excess of or considerably below the level on the motorcycle label.

As a result, motorcyclists riding in those jurisdictions which looked to the F50 label value on each motorcycle as the in-use noise standard could have experienced the following: when tested by state or local officials, some motorcyclists could have been ticketed for operating excessively loud exhaust systems even though they would pass the Federal pass-by standard; other motorcyclists who had tampered with their replacement exhaust system could have passed the F50 test even though they would have failed a pass-by test by a considerable margin. Thus, the Agency agrees that the proposed F50 labeling program is undesirable.

In fact, for the F50 label scheme to be workable, each different exhaust system, whether OEM or aftermarket, would have to be lableled with an F50 value on the label for each motorcycle that it fits. However, this scheme would require aftermarket manufacturers to place a relatively complex label on each replacement exhaust system intended for regulated motorcycles. And, the Agency would need an extensive enforcement effort to determine whether the manufacturers had labeled correctly. A final consideration is that state and local enforcement officials are unlikely to make use of such a complex label. These considerations, taken together, ruled against this approach.

Another possibility that the Agency considered was not to require any F50 values on either the motorcycle or muffler label, but rather to set a single F50 standard for use by state and local enforcement which would hopefully provide detection of at least the more serious instances of tampering. Preliminary analysis has indicated, however, that to avoid incorrectly citing motorcycles which would pass the Federal pass-by standard, the single F50 standard would have to be set fairly high. And if the standard were set at this level, enforcement officials would be able to cite only one-fourth of the loud motorcycles which they stopped. Further, the 25% which would be cited would not necessarily be the truly noisiest motorcycles (as determined by the pass-by test). Thus, this approach is also in doubt.

How an F50 labeling scheme relates to other approaches that might be taken by state and local governments to deal with the motorcycle modification problem affects the need for the proposed stationary test value to be on the label as well as the likelihood of state and local utilization of such a scheme. There are essentially three approaches that state and local governments can use to address a motor vehicle noise problem.

One approach is the street noise standard. This usually consists of a not-to-exceed level measured at curb side or some specified distance from the roadway. The specified not-to-exceed level may be different for various roadway situations. For example, in several states on streets with speed limits less than 35 mph, it is illegal for a motorcycle to exceed one specified noise level, and on streets with speed limits greater than 35 mph, it is illegal for a motorcycle to exceed a higher specified noise level. Some jurisdictions differentiate between streets with less than 1% grade and streets with more than 1% grade with regard to allowable noise levels. As provided by Section 6(e)(2) of the Act, state and local governments are not preempted by Federal regulations from establishing and enforcing such controls on environmental noise.

The fundamental difference between this type of standard and an F50 standard is that the way a motorcyclist operates his motorcycle (i.e., whether he accelerates rapidly or slowly) strongly affects the street level measurement. By contrast, the F50 standard is an equipment standard as opposed to an environment standard and is unaffected by whether a particular motorcyclist may be more aggressive or less aggressive than the norm in operating his motorcycle. Thus, it is possible for a person with a very loud modified motorcycle to operate it in such a way as to pass the street standard even though he would certainly fail an F50 test. Likewise, it is possible for a complying motorcycle to be operated so aggressively as to violate a stringent street standard.

A second approach available to state and local jurisdictions is to adopt and enforce the Federal labeling and anti-tampering provisions provided by these final regulations. For example, competition exhaust systems are required to be labeled as proper for use on competition motorcycles only; all other exhaust systems intended for regulated or unregulated motorcycles must be labeled as such. State and local jurisdictions will thereby have a means of keeping the competition type exhaust systems off the street and out of non-competition events in off-road riding.

and of keeping unregulated exhaust systems off the quieter regulated motorcycles.

The third approach is the in-use equipment standard, be it a stationary test standard or a pass-by test standard. The pass-by test established by this regulation is intended for use by manufacturers. Because of its complexity, it is not generally suitable for state and local enforcement purposes. The simple stationary tests usually offer such a poor correlation that they would seem to be highly ineffective in actual use.

The scheme of requiring a label on the muffler with an F50 value for each different motorcycle that it fits does significantly reduce the correlation problem. But it is complex because of the need for the enforcement officer to determine the RPM for the test from the label on the motorcycle frame, to identify which model of the motorcycle he is inspecting and to interpret which levels should be applied to this motorcycle from the several different levels on the muffler label. It also relies on an expansive enforcement program or on the good faith of many exhaust system manufacturers and still suffers, albeit to a reduced extent, from correlation-related difficulties.

Few of the comments received from state and local governments mentioned either criticisms of or support for the proposed F50 label scheme. Of 84 written submissions by state and local governments, only 12 specifically mentioned labeling. Eleven of the 12 endorsed the labeling concept, but only 2 of the 11 specifically mentioned the stationary test. The one submission that did not endorse the labeling concept specifically did not support the stationary test.

In summary, it is likely that most state and local governments would not utilize a Federal F50 labeling scheme. Other approaches to controlling motorcycle noise at the state and local level, such as the street noise standard and enforcement of the Federal labeling and anti-tampering provisions, are more workable at the present time.

As a result of these considerations, the requirement for motorcycle manufacturers to conduct F50 stationary tests and place the resulting measurement on a label is deleted in the final rulemaking. Product labeling, however, is still required. To respond to comments that the proposed label needed to be simplified and to remove the F50 stationary sound level information from the label format, the label wording has been substantially condensed. See § 205.158 and § 205.169 and definitions in § 205.151(a)(8) and (20).

3.6 Issue

Should mopeds be omitted from the final motorcycle noise regulation?

Comments

Several moped manufacturers, a moped trade association, and an individual commented that EPA does not have the statutory authority to regulate mopeds since EPA has not identified mopeds as a major source of noise either individually or as a part of a class. A moped trade association and two moped manufacturers contended that regulating mopeds will not provide health and welfare benefits to the public because mopeds are currently quiet and are likely to remain quiet. One manufacturer stated that it will be difficult to get a test site for mopeds that has an acceptable ambient noise level.

Decision

EPA has retained mopeds in the final motorcycle noise regulation. Motorcycles were identified under the authority of Section 5(b)(1) of the Act as a major source of noise on May 28, 1975 (40 FR 23105). The intent of that notice was to identify the class of motorcycles as a major source of noise; and the identification was based on the total impact of motorcycle operations. The identification did not specify which types of motorcycles or motorcycle operations were responsible or further define at that time all of the various vehicles which are included in the class of vehicles known as motorcycles.

States refer to mopeds as motorized bicycles, bicycles with helper motors, class "C" motorcycles (New York), and simply as mopeds. The noise standards of the International Standards Organization (ISO) refer to mopeds as "motorcycles" with an engine capacity which does not exceed 50 cc's. The National Highway Traffic Safety Administration (NHTSA) refers to mopeds as motor driven cycles with specified limits on maximum speed, horsepower, and engine displacement. However, "most mopeds cannot be considered truly pedalable because of their heavy weight (100 lbs. compared to 20 to 40 lbs. for bicycles) and extremely low gearing which means the rider has to pedal fast and hard" (Consumer Guide Magazine). The pedals and other special attributes, such as a top speed of 25 to 30 mph and a maximum engine power rating of 1 to 2 hp, are designed to qualify the moped for less restrictive operator licensing restrictions, nominal state registration fees, and exclusion from otherwise mandatory helmet and insurance requirements. By function, they are small motorcycles with limited engine displacement. For these reasons, the Agency considers mopeds to be a part of the motorcycle class.

Although most new mopeds are quieter than other new motorcycles during acceleration, their noise levels are comparable to new motorcycles during low speed cruising because the moped must operate at or near full throttle to maintain its top speed of 25 or 30 mph. The average A-weighted noise level of current new larger motorcycles at a cruising speed of 25 mph is about 68 dB while the level of 7 mopeds that were tested, at their maximum speed of 25 to 30 mph varied from 60 to 69 dB (based on a 50 foot microphone distance from the vehicle's path). Notably, the average new automobile has an average noise level at a cruising speed of 25 mph of only 61 dB, which is lower than the average moped at the same speed.

EPA has identified a day-night sound level (L_{dn}) of 55 dB as the environmental noise level below which no significant adverse impact on public health and welfare occurs. The Agency therefore desires, from a health and welfare perspective, to quiet all noise sources substantially below the 70 dB level in order to bring about an acceptable environmental noise level. Standards have not been set this low in regulations for trucks and other sources because of the limits of available technology and the cost of compliance. Although new mopeds may be quiet when compared to new trucks, EPA does not believe that new mopeds should be permitted to have increased noise levels in the future especially when there are no costs (other than the small cost of showing compliance to EPA) associated with meeting the 70 dB standard. All mopeds that the Agency has tested, which are being sold in the U.S., easily comply with the standard.

In Europe where mopeds are much more numerous than in the United States, mopeds with ineffective exhaust systems contribute significantly to the motor vehicle noise problem. This noise problem can be attributed to the removal of mufflers to make the moped engine sound more powerful and the failure to replace faulty exhaust systems. EPA believes that the European experience with mopeds, similar in many respects to the current motorcycle noise problem in the U.S., is also likely to be repeated in this country as the moped population continues to grow. One aftermarket company is already marketing parts and services to increase moped horsepower and performance. A substantial market for such performance

products as racing exhaust pipes for mopeds can be expected. The use of such exhaust systems can increase vehicle noise levels by as much as 20 dB. Modified mopeds would be considerably noisier than larger motorcycles meeting the noise standards. Because mopeds are likely to be operated on local residential streets and in back yards where ambient noise levels are lower than more highly trafficked areas, such modified mopeds would stand out and would likely be quite annoying to the residents exposed to the noise.

However, if mopeds and moped replacement exhaust systems are regulated, sales of replacement exhaust systems designed specifically to increase the noise levels of mopeds will be curbed. Without such a regulation, sales of these noise producing products could be expected to continue to grow as the moped population increases, and similar problems caused by noisy replacement exhaust systems for larger motorcycles would result.

In the absence of a Federal rule for mopeds and moped replacement exhaust systems, the resources required by state and local governments to counter the moped noise problem could be substantial. By including mopeds in this rulemaking, state and local governments will receive significant benefits even if they take no further steps. With this rulemaking, coupled with anti-tampering efforts by state and local officials, a serious moped noise problem in this country could be substantially avoided.

Those moped manufacturers that find it difficult to locate test sites with acceptable ambient noise levels will be allowed to test with the microphone at 7.5 meters from the vehicle path, rather than 15 meters specified in the moped test procedure, and subtract a correction factor of 6 dB from their measurements. Since the tested noise levels would then be higher, the problem of finding a test site with an ambient level 10 dB below the regulatory level should be effectively eliminated.

The intent of the final rule is the same as originally proposed; that is, to set a not-to-exceed standard for mopeds, to prevent replacement exhaust systems from causing mopeds to exceed that noise emission standard, to institute the anti-tampering provisions of the Noise Control Act, and to require product labeling.

The specified administrative requirements in the final rule for moped manufacturers to show compliance with the standard are the same as for other motorcycles. However, the manufacturers of mopeds are expected to use the carry-over provision to reduce the production verification testing requirements in subsequent model years. The Agency believes that moped manufacturers can make effective use of this carry-over provision because the standard is a one time standard and because mopeds are expected to have noise levels well below the standard. Furthermore, moped manufacturers will have a limited number of models which must be production verified in the first year.

The final rule has been changed to clarify that "nopeds" (mopeds without pedals) are covered by the regulation. Paragraph 205.151(a)(2)(ii)(D) has been deleted from the proposed definition of mopeds, so that mopeds with and without pedals are included in the moped definition and will be required to comply with the not-to-exceed noise standard.

3.7 Issue

How should EPA deal with the problem posed by exhaust systems with removable baffles and highly degradable components? In the proposed regulation, the Agency asked for comments on the feasibility of establishing design criteria for exhaust systems to determine whether systems would be able to meet the applicable noise standard for the duration of the Acoustical Assurance Period (AAP).

Comments

Manufacturers and trade associations opposed the establishment of design criteria on the basis of lack of statutory authority and, in the words of one manufacturer, because "design criteria restrict innovation, reduce competition, and foster the continuation of obsolete technology." One major manufacturer commented that insufficient data were available to evaluate muffler durability by design criteria.

A motorcycle interest group and a public interest group suggested that EPA require that replacement exhaust systems be sealed with no removable fibrous packing or baffles.

Decision

It is of paramount importance to the success of these final regulations that motorcycle exhaust systems retain their noise suppression performance in actual use. Exhaust systems which lose their noise attenuation characteristics, whether due to removal of baffles or degradation of components, will seriously diminish the health and welfare benefits that would otherwise be derived from this rulemaking. To deal with the problem of highly degradable components in motorcycle exhaust systems, the motorcycle and motorcycle exhaust system noise emission regulation includes an Acoustical Assurance Period (AAP). Products must, when properly maintained and used, continue to meet the applicable standard for the duration of the AAP.

In the proposed regulation, EPA solicited comments concerning a program by which exhaust systems' potential compliance with the standards for the AAP would be judged based on design characteristics. It was thought that conformance to design criteria rather than noise levels might make it easier for manufacturers to demonstrate and for EPA to ensure compliance with the applicable Federal performance standards over the specified AAP. However, based on the unfavorable public comments and upon further analysis, the Agency has decided against establishing design criteria for exhaust systems.

Also in the proposed regulation, manufacturers were required to develop a Sound Level Degradation Factor (SLDF). The SLDF was the manufacturer's estimate of the increase in noise emissions during the AAP expected when the exhaust system was installed on a motorcycle for which it was designed and marketed. In the proposed regulations, EPA required that manufacturers design products which, when installed on the intended motorcycle, limited noise emission at the time of sale to levels no greater than the standard set by the regulations minus the manufacturer's SLDF for the product. The requirement that manufacturers compute and use an SLDF, as described in the proposed rule, has been deleted from the final rule. However, as discussed later, each manufacturer must retain records containing the information or statements of engineering judgments upon which the manufacturer relied in determining that his product will meet the standards throughout the acoustical assurance period.

The Agency deleted the requirement for several reasons. First, degradation of noise emission components and the removal of baffles is not expected to be a uniformly serious problem for all types of exhaust systems. Noise suppression performance of properly designed motorcycle mufflers and silencers generally does not degrade significantly over the life of the product when used and maintained in a proper manner, and some manufacturers produce internally baffled or sealed exhaust systems which present little opportunity or incentive to owners or users of the product to remove baffling material. Second, the

Agency is considering action, described below, more directly focused on the problem of removable baffles. Finally, EPA believes adequate enforcement activity with respect to highly degradable components can be conducted without requiring manufacturers to compute a discrete SLDF, and to report it to EPA. Therefore, the SLDF has been deleted from this regulation.

The requirement remains that manufacturers design and build products that will meet the standard for the AAP. Manufacturers must take whatever steps they find necessary to assure their products' compliance. The Agency will conduct noise emission testing of products after those products have been in use to determine if the products are meeting the standard for the AAP. If it appears from the results of surveillance testing, from state and local enforcement activity, or from other information that particular products are exceeding the standard during the AAP, the Agency may order individual manufacturers to perform such testing (including reasonable durability testing) as EPA determines is necessary to demonstrate whether the products are in compliance with the regulation. EPA may order that the manufacturer report the results of such testing to EPA, or in the alternative, the agency may itself conduct such testing. The authority for this testing is Section 13(a) of the Act.

The final regulation also provides for maintenance of records by the manufacturer concerning durability of the noise attenuation characteristics of the product during the AAP. Although the manufacturer determines how much analysis or testing will provide him with adequate assurance that his products meet the standard, the information upon which he relies is required to be maintained and is subject to inspection by EPA. Because of the difference in the durability of currently marketed products, the Agency expects that the types and volume of records will differ considerably among the mufffler categories. In some cases, a brief statement of engineering judgment may suffice. In other cases, more extensive noise emission testing and analysis may be necessary for the manufacturer to be confident of compliance.

Finally, there is the problem of removable baffles. EPA is aware of several four-stroke exhaust systems currently available which have easily removable baffles. Removal of these baffling units can cause a motorcycle's acceleration noise level to increase by as much as twenty decibels. Although the removal of baffles from a Federally-regulated motorcycle exhaust system would constitute a tampering violation of Federal law under the provisions of the Noise Control Act, this is and can be expected to remain a major noise problem unless the Agency takes further action.

To deal directly with the problem of removable baffles, elsewhere in today's Federal Register, the Agency is proposing an amendment to these regulations. The proposed amendment would require that manufacturers conduct the testing required to demonstrate compliance with the noise standards *with all easily removable components of the exhaust system removed.* An "easily removable component" is defined as "any part (not to include header pipes, expansion chanbers, or the muffler shell) that can be removed without causing highly visible damage to the exterior of the exhaust system by removing bolts, screws, or similar fastening devices, or by shearing spot welds with hammer and chisel, or by other simple means of dislodgement." The purpose of this proposed amendment is to encourage manufacturers to design exhaust systems which will reduce the incidence of tampering by consumers. Comments are solicited in the preamble to the proposed amendment and will be analyzed prior to the adoption of a final rule.

4.0 Other Changes to the Proposed Regulation

205.151 Definitions

The following definitions were added to clarify the wording changes in the labeling Sections (205.158 and 205.169): (13) "Closing rpm," (25) "Noise Emission Standard," (30) "Serial Number."

Wording changes were made to clarify the definition of (11) "Closed course competition event."

Subpart E Title

The word "Replacement" was removed from the title of Subpart E to made it clear that the provisions of the subpart apply to original equipment exhaust systems as well as replacement exhaust systems.

Subparts D and E

[Changes related to litigation of other EPA noise emission regulations.]

Parts of other EPA noise regulations have been challenged in court. A case with particular relevance to this final motorcycle noise emissions regulation is *Chrysler Corp. v. EPA* (600 F.2d 904 (D.C. Cir. 1979)). Pursuant to stipulations between the parties to that case, parts of the New Medium and Heavy Trucks Noise Emission Standards involving production verification, selective enforcement auditing, recordkeeping and labeling requirements, and testing by the Administrator were amended (42 FR 61457, December 5, 1977). Where EPA has deemed the changes relevant to this regulation, the changes have been incorporated.

A change to the warranty section of the truck regulation was mandated by the decision in the *Chrysler* case. A similar change to this final regulation is discussed in detail below.

Sections 205.160 and 205.171 Selective Enforcement Audit (SEA)

The proposed SEA provisions have been changed in order to decrease the amount of time needed to perform an SEA. The changes also more efficiently accommodate categories and configurations with low production volumes.

Overall, the new SEA procedure requires fewer manufacturer and EPA resources to perform, yet it does not change in any way the risk of SEA failure for the manufacturer.

Sections 205.157 and 205.168 Production Verification

A new parameter, "amount of absorption materials," was added. Since the amount of absorption material plays a major part in the noise level of exhaust systems, it was added as a parameter to assure that aftermarket exhaust system manufacturers would consider it when they assemble and rank their test configurations.

Sections 205.157-2 and 205.168-2 Production Verification Procedures

Sections 205.157-2(f) and 205.168-2(g) are revised to state that EPA Enforcement Officers or other employees of the Agency may be present to monitor or conduct testing in lieu of the manufacturer. Such observance will be contingent upon the Agency obtaining the manufacturer's consent or valid warrant in the absence of his consent. This change imposes no additional burdens on the manufacturer and is made to allow the Agency more flexibility in the use of its available resources to ensure compliance by all regulated manufacturers with the production verification procedures which are described in the preceding paragraphs of these sections.

Sections 205.157-4 and 205.168-3 Production Verification Report; Required Data

Paragraph (b) of each of these sections is revised to require that the production verification report include

for each category and configuration subject to a noise emission standard a sample of a compliance label which is completed with all information required by § 205.158 or § 205.169 as the case may be.

Sections 205.157–9 and 205.168–10 Production Verification Based on Data from Previous Years

The proposed carry-over provisions in Subparts D and E have been revised to allow with certain restrictions the manufacturers to have automatic carry-over in subsequent years when the initial production verification noise emission level is at least 2 dB below the applicable standard. However, in any year when a more stringent standard becomes effective, the manufacturers must conduct the required production verification tests for all categories and configurations.

Also, § 205.168–10 has been revised to clarify the fact that a manufacturer who continues in subsequent years to produce replacement exhaust systems for earlier model years of Federally-regulated motorcycles need not conduct production verification tests in those subsequent years unless design changes which reduce the noise attenuating ability of those replacement systems are made.

Sections 205.162–1 and 205.173–1 Warranty

The warranty statement in § 205.162–1 has been reserved. The proposed motorcycle warranty was similar to the new medium and heavy truck warranty (40 CFR 205.58–1(a)) which was recently invalidated by the U.S. Court of Appeals for the D.C. Circuit (*Chrysler Corp. v. EPA*, 600 F.2d 904 (D.C. Cir. 1979)). Manufacturers must still submit their proposed warranty provisions to EPA. However, at this time, we are not prescribing the exact wording of the warranty statement. Manufacturers may refer to the alternate warranty statement for trucks as an example of acceptable wording. (See 44 FR 67659, November 27, 1979.)

EPA is preparing a new warranty provision for trucks, buses, and motorcycles to be proposed in the Federal Register which will be consistent with the *Chrysler* decision. Comments on the proposal will be solicited and studied before a final warranty provision is published for trucks, buses, and motorcycles.

The proposed warranty language in § 205.173–1 is retained because subsequent manufacturing operations do not usually occur on aftermarket exhaust systems. Therefore, the situation in the *Chrysler* case is not analogous to that of the aftermarket motorcycle exhaust system manufacturers.

5.0 Estimated Effects of the Regulation

5.1 Health and Welfare

EPA estimates that approximately 93 million people are currently exposed to traffic noise levels equal to or greater than a day-night sound level (L_{dn}) of 55 dB. Since motorcycles are a component of the urban noise problem, the Agency assessed the health and welfare benefits associated with this regulation for street motorcycles and off-road motorcycles.

1. Street Motorcycles

Two different methods of assessing the current noise impact and impact reductions due to Federal regulation of street motorcycles were studied by the Agency. The reduction in the impact of single event motorcycle pass-bys was assessed, as was the effect of lowered motorcycle noise levels and exhaust modifications on total urban/suburban traffic noise levels and the associated general adverse response.

Assessment of the intrusive nature of motorcycle noise pass-bys led the Agency to a single event activity interference analysis as the most meaningful measure for assessing the health and welfare impact of motorcycle noise. Interference with everyday human activities is very closely related to the dissatisfaction and objection that the public feels towards noise. For example, at the final-step 80 dB regulatory level, the Agency estimates that the extent and severity of interference with human activities attributable to motorcycle noise will be reduced from current levels by 47–75 percent. These figures assume that regulation of replacement exhaust systems will reduce the numbers of exhaust-modified motorcycles from the currently estimated 12 percent of the street motorcycle population (nationwide) to between 3 and 7 percent.

Motorcycles account for less than 2 percent of total vehicular traffic mileage. However, because they are presently among the noisiest vehicles in the traffic stream, reductions of overall traffic noise levels and associated reductions in the extent and severity of traffic noise impact due to Federal motorcycle noise regulation are greater than what otherwise would be expected. From current levels, with medium and heavy trucks regulated to 80 dB, this regulation of motorcycle noise is expected to reduce the impact from overall traffic noise by 7–11 percent. In the year 2000, with an expected U.S. population of 285 million, this regulation is expected to reduce the number of persons exposed to a day-night level of traffic noise greater than 55 dB from 129 million persons to between 113 and 117 million persons.

2. Off-Road Motorcycles

The reductions in the noise impact achieved by Federal regulations for off-road motorcycles are less easily quantified in terms of population impact. This is because the vehicles are used in many areas that are not densely populated. However, it is these same areas where quiet is valued as a national resource, and the sheer aural detectability of a vehicle may create an adverse impact. Nevertheless, reductions in land area and the number of people exposed above the aural detectability level by off-road motorcycle noise can be estimated using an aural detectability criterion and reasonable assumptions about the locations of off-road motorcycle operations. At noise level standards of 82 dB and 80 dB for large and small off-road motorcycles, respectively, the Agency estimates that the number of people exposed to off-road motorcycle noise will be reduced from 3.1 million to approximately 2.3 million persons. This figure assumes a 80 dB regulatory level for street motorcycles which are sometimes used off-road, and a reduction in the proportion of exhaust system modifications from the currently estimated 26 percent of the off-road population to between 8 and 16 percent.

5.2 Cost and Economic Impact

Costs of applying noise reduction technology to meet the regulatory levels, and the associated increases in retail prices, vary according to the type and size of the specific motorcycle model. Expected unit purchase price increases at the 80 db regulatory level range from 0.2 percent for street motorcycles with a displacement less than 100 cc, to 4 percent for medium size street motorcycles, to 2 percent for large street motorcycles (average retail price increase). Unit prices of large off-road motorcycles are projected to increase 2 percent at the 82 dB level, while unit price increases of small off-road motorcycles are projected to increase ar average of less than one percent at the final-step 80 dB level.

The total annualized cost of the noise emission standards for street and off-road motorcycles is estimated to be approximately $95 million per year. This figure, projected through the year 2010, accounts for increases in retail prices and the increased cost of operating and

maintaining the vehicle due to noise control regulation.

Federal noise standards for replacement exhaust systems are expected to cause retail prices of current quiet systems (meeting California's 83 dB requirement) to rise to levels comparable to those predicted for stock replacement systems for 80 dB motorcyles, or approximately 25 percent more than the average price of current original equipment systems, a $30 price rise. Additionally, over time, a shrinkage of the total market for replacement systems is forecast, provided that such replacement exhaust system manufacturers fully comply with the standards established by these regulations, since styling and performance advantages of many current systems will largely disappear. The total annualized cost of the motorcycle replacement exhaust system standards is estimated to be $3.4 million per year at the final 80 dB level.

The assessed costs and impacts of this regulation will be in addition to those costs and impacts attributed to EPA's motorcycle air emission regulations (42 FR 1122, January 5, 1977). EPA studies, using information supplied by various manufacturers, indicated that the cost of compliance with the air emission standards for 1978 would result in an average retail cost increase of $47 per motorcycle. This cost would be partially offset by an average discounted lifetime fuel savings in maintenance and improved reliability of the product. The average incremental cost increase for 1980 air emission standards was estimated to be $9, which included a small additional improvement in fuel economy. The manufacturers estimated that fuel economy improvements associated with the 1978 emission standards would range as high as 65 percent with an average increase of 20 percent. No significant decrease in sales or shift in market share (between manufacturers) was expected to result from the implementation of that regulation.

Several economic impacts were studied by EPA to determine the possible effects of noise control regulations on the various segments of the motorcycle industry. These impacts are summarized as follows:

1. Impact of Motorcycle Manufacturers

A net reduction in motorcycle demand is expected as a result of the noise standards. Forecasting based on historical price-demand relationships indicates that the demand for street and off-road motorcycles combined would be about 2.1 percent below expected demand in the absence of noise regulations. It should be noted, however, that this demand forecast would have resulted in part even in the absence of these Federal rules because of the State motorcycle noise laws planned to take effect. Significant shifts in historic market shares due to Federal noise standards, however, are not expected to occur among the major Japanese motorcycle manufacturers. Their profitability is likewise not expected to be impacted to any large extent since cost increases due to noise control are expected to be passed on to consumers. Although higher retail prices will result in some lost sales, total industry sales in terms of both units and dollars are projected to significantly expand in the next decade.

For AMF/Harley-Davidson to achieve as 80 dB standard, major redesigning of its current large engine types incorporating current engine quieting techniques will be necessary. One attraction of Harley-Davidson motorcycles is a uniquely identifiable exhaust tone that must dominate other subsources to be heard. Engine redesign to meet 80 dB could change tonal characteristics and cause performance penalties that may reduce the demand for Harley-Davidson motorcycles. The economic impact of a 78 dB standard on AMF/Harley-Davidson, the principal domestic manufacturer, would have been manifested primarily in terms of the ability of the firm to manufacture large displacement motorcycles which would conform to EPA standards. Therefore, Harley-Davidson does not consider compliance with a 78 dB regulatory level achievable with modification to current engine designs. Complete engine redesigns, in addition to major exhaust and intake treatment, would likely have been necessary for Harley-Davidson to meet a 78 dB level.

AMF/Harley-Davidson motorcycles occupy a unique position in the U.S. motorcycle market with a devoted following, and are expected to be relatively insensitive to small price changes. Consequently, if engine designs acceptable to the consumer can be developed which meet the standards, the firm is expected to be able to sell the new designs at little sacrifice in profitability.

The other North American manufacturer of street motorcycles is Canada's Bombardier, Ltd., which manufactures high performance dual purpose motorcycles based on their off-road and competition models. The remaining street motorcycle manufacturers are predominantly European firms which export large displacement models on a limited scale to the United States, although several export a sizable portion of their production to this country. Most of these firms are considered capable of producing motorcycles at the 80 dB regulatory level. Bombardier and some of the European manufacturers may or may not be able to continue exporting street motorcycles to the United States if a 78 dB standard took effect.

Although AMF/Harley-Davidson and several of the other smaller manufacturers are capable of designing motorcycles that will comply with the standards, they argued, in comments to the proposed regulation, that the proposed lead time would make it extremely difficult or impossible for them to produce motorcycles that would meet the noise standards by the effective dates. The Agency carefully evaluated these comments, and extended the effective dates in the final rule, in part to allow these manufacturers more lead time to introduce new motorcycles in parallel with existing products.

Japanese manufacturers of off-road motorcycles are not expected to experience serious technical difficulty producing off-road motorcycles which comply with these noise standards since the quieting technology is well understood. Overcoming weight and horsepower penalties to produce high performance motorcycles, however, will be a challenge. The smaller, predominantly European manufacturers, which often rely on superior performance for marketing advantages, are expected to experience difficulty in maintaining their present market positions at these regulatory levels, due to the considerable impact to the performance of current models. The 82 dB regulatory level for large off-road motorcycles is considered to be technically achieveable for almost all current manufacturers without requiring conversion to four-stroke engines. However, the performance and cost impacts of this level may make it unprofitable for some of the smaller firms to remain in the U.S. market.

Moped-type street motorcycles will be required to meet a 70 dB standard. All mopeds that the Agency tested, which are sold in the U.S., comply with the 70 dB standard. The costs of compliance with this rule for these vehicles are the administrative costs of production verification testing, recordkeeping and labeling, which are expected to be minimal as a result of the anticipated use of the carry-over provision by moped manufacturers.

2. Impact on Replacement Exhaust System Manufacturers

The regulations are expected to have a substantial impact on the replacement exhaust system industry. To meet the 80 dB standard, aftermarket replacement exhaust system manufacturers will need to incorporate relatively sophisticated noise attenuation techniques into the design of their mufflers and exhaust systems. Of the more than 150 firms currently in the market, most are small, low volume enterprises devoted exclusively to manufacturing motorcycle exhaust systems, with little or no capability for innovative product design or development. To produce complying systems for post-1980 (regulated) motorcycles, these firms are expected to copy the designs of other manufacturers, a common practice at present. The ten to twenty leading firms in the industry are expected to be able to design and produce their own complying systems, although at similar price and performance penalties associated with replacement systems sold by the original equipment manufacturer (OEM).

The demand for non-OEM exhaust systems is expected to be severely impacted. The price of a typical "4 into 1" or "2 into 1" replacement exhaust system, both OEM and non-OEM, is expected to increase by 20 to 25 percent to meet the 80 dB motorcycle regulatory level. And the differences in styling, performance characteristics, tonal quality, and noise levels between non-OEM and OEM replacement exhaust systems is expected to become less. Since an exhaust system maufacturer's success is very dependent on the special styling, performance, and tonal characteristics, and often high noise level, of his product, the impacts on demand due to changes in these factors are believed to be extremely significant, perhaps more significant than the price change. Based on discussions with aftermarket manufacturers, a 25% reduction in demand for aftermarket exhaust systems is forecast by the year 2000 when regulated motorcycles at the 80 dB level will have replaced most unregulated motorcycles in use.

The adverse impact of the regulations on aftermarket manufacturers will be gradual since the standards are phased in over a five-year period and since firms can continue to produce systems for motorcycles manufactured prior to the applicability of each noise standard. However, in the longer term, as unregulated motorcycles are gradually scrapped, and as the demand for complying non-OEM systems falls, many of the small volume manufacturers are likely to switch to alternate product lines, or go out of business. While the revenues of the ten to twenty leading firms are expected to also decrease as a result of this regulation, these larger firms are expected to continue manufacturing replacement exhaust systems. In fact, although a net shrinkage in the replacement exhaust system is forecast, these larger firms may actually experience increased sales as other manufacturers exit from the market. This adverse impact on aftermarket manufacturers is not projected on the basis of technical incapability or the cost of compliance testing which is a small fraction of total price increase. Rather, these impacts are expected to result as the special characteristics of increased performance, gutteral tone, higher noise level, and styling provided by non-complying exhaust systems on which sales are substantially dependent are partially eliminated by the requirement to produce quiet exhaust systems.

The expected impacts are based upon the implementation of a successful national Federal enforcement program along with complementary enforcement programs by some state and local jurisdictions to identify manufacturers who continue to sell loud non-complying exhaust systems for regulated motorcycles (discussed in section 3.7).

To minimize the burden posed by the compliance testing requirements, the Agency will provide technical assistance to small manufacturers in the testing and certification of their exhaust systems with all provisions of the regulation. The Agency will also actively support manufacturers in their sharing of test facilities for compliance demonstration.

3. Impact on Foreign Trade

Since motorcycles comprise substantially less than 1 percent of total U.S. foreign trade with Europe and North America, the impact of a Federal motorcycle noise regulation on the balance of trade with these areas is expected to be negligible. Motorcycles currently account for some 15 percent of the approximately $10 billion in annual imports from Japan. EPA does not, however, anticipate any substantial changes in net revenue to Japanese motorcycle manufacturers resulting from these noise standards, and thus no appreciable change in the U.S.-Japan balance of trade is forecast.

4. Impact on Exports

The small percentage of AMF/Harley-Davidson's domestic motorcycle production that is currently exported is not expected to change significantly as a result of noise regulations.

5. Impact on Employment

If demand reduction forecasts based on historical relationship are applicable, eventual reductions in current U.S. motorcycle industry employment resulting from the final Federal noise standards could be approximately 1,760 positions from future levels in the absence of noise regulations. This impact would occur at least in part in the absence of Federal regulations because of the more stringent State regulations that would otherwise go into effect. However, projected growth in the industry is expected to more than compensate for any employment losses that do occur.

If these standards prevent AMF/Harley-Davidson from being able to remain in the market, its 3,300 motorcycle-related jobs in Milwaukee, Wis. and York, Pa. would be affected. However, as is discussed earlier, EPA does not expect these regulations to force Harley-Davidson out of the market. The aftermarket exhaust system industry is the only segment of the total industry predicted to experience an actual net decline in employment, possibly impacting some 500 positions, assuming compliance with these standards.

6. Impact on Gross National Product

The proposed regulations are not expected to have nay consequential effect either direct or indirectly, on the U.S. Gross National Product (GNP).

7. Impact on Energy Consumption

Additional weight and increased backpressure due to noise suppression components are expected to negatively impact motorcycle fuel economy by an estimated 2 percent. The average fuel consumption of current street motorcycles is 47 m.p.g. Off-road motorcycles are estimated to currently have an average fuel consumption of 60 m.p.g. Based on an average of 2300 miles per year for street motorcycles, and 1200 miles per year for off-road motorcycles, increased fuel consumption of about one gallon per year for street motorcycles and less that one gallon per year for off-road motorcycles is expected. By the year 2000, when the majority of motorcycles in use will have been manufacturered to comply with the 80 dB standard, the current population of motorcycles is projected to have more than doubled to approximately 16 million vehicles. The fuel penalty translates to about 15 million gallons of gasoline in the year 2000, or one-half million barrels of crude oil, which would represent less than one-tenth of one

percent of the total U.S consumption of crude oil at that time.

6.0 Enforcement

The enforcement strategy encompasses both time of sale and in-use compliance requirements.

1. Time of Sale Requirements

Manufacturers of new motorcycles and new replacement exhaust systems must produce products which comply with the standard at the time of their distribution in commerce. The process of testing these products is called production verification (PV). Manufacturers performing PV must report the test results to EPA to demonstrate compliance.

Production verification is required yearly of all manufacturers. However, manufacturers may apply to EPA for carry-over of the prior year's PV to a new year. EPA's decision to allow or not allow carry-over will be based on the standard for that year, number and level of PV and quality control tests reported to EPA, changes made in the design and construction of the units from the prior year, and other information acquired by or provided to EPA and relevant to the overall industry, the particular manufacturer, and the subject product. Particularly in the case of the moped noise emission standard, the Agency anticipates that it may be possible to approve many of the carry-over requests from manufacturers since information available to the Agency shows that mopeds are, in general, well below the standard.

The Selective Enforcement Audit (SEA) provisions of this regulation are intended to provide EPA with an additional tool to verify manufacturers' compliance by requiring manufacturers to test or to allow EPA to test a sample of vehicles or exhaust systems of a certain category or configuration. If a manufacturer fails an SEA, EPA may take corrective action such as ordering the manufacturer to cease distribution of that product or to recall those products determined not to be in compliance.

The SEA procedures have been revised such that SEA's can be completed more quickly and with less burden on manufacturers and EPA. EPA does not expect any additional burden on manufactures from this change to the regulation.

2. In-Use Requirements

The warranty provisions are intended to provide consumers with a remedy if products purchased by them do not meet the applicable standard at the time of sale. Part of the warranty provisions for this final rule was reserved, in response to a U.S. Court of Appeals decision. For a more complete discussion on this topic, refer to Section 4 of this preamble.

The in-use provisions containing the requirement that a tampering warning and maintenance instructions be provided to the purchaser remain unchanged from those proposed. These provisions provide additional assurance that the products will remain quiet during use.

3. Civil Penalty Policy

Under Sections 10(a) and 11(a) of the Noise Control Act, as amended, a manufacturer who distributes in commerce any new product after the effective date of an applicable regulation prescribed under Section 6, other than in conformity with that regulation, is subject to civil or criminal penalties. Civil penalties under Section 11(a)(2) shall not exceed $10,000 per day of violation. The EPA is adopting a Civil Penalty Policy for assessment of judicial civil penalties for violations of regulations promulgated under Section 6 and Section 8. A notice of this policy is planned to be published in the Federal Register in the near future.

It had been EPA's experience with other noise emission regulations that the overwhelming majority of manufacturers subject to those regulations have complied with applicable noise emission standards. The Civil Penalty Policy is designed to encourage continued compliance and to deter violations by ensuring that appropriate penalties will be sought in cases of violation and by seeking to require the manufacturer to achieve compliance as quickly as possible.

The Civil Penalty Policy does not limit the authority of the Administrator to take administrative action under Section 11(d) of the Act to protect the public health and welfare. EPA will also seek injunctions or pursue other remedies, as appropriate, to assure full compliance with the regulations promulgated under the Noise Control Act. Payment of a civil penalty will in no case excuse a violator or substitute for other available remedies which the Administrator, in exercising his authority under Section 11(d), or the courts, in exercising their authority under Sections 11(a)(1) and 11(c), determine to be necessary to protect the public health or to restrain violations.

7.0 Preemption

Under Subsection 6(e)(1) of the Noise Control Act, after the effective date of a Federal regulation limiting noise emissions from a new product, no state or political subdivision may adopt or enforce any law or regulation which sets a limit on noise emissions from such new product, or components of such new product, which is not identical to the standard prescribed by the Federal regulation. Subsection 6(e)(2), however, provides that nothing in Section 6 precludes or denies the right of any state or political subdivision to establish and enforce control on environmental noise (or one or more sources thereof) through the licensing, regulation or restriction of the use, operation or movement of any product or combination of products.

The noise controls which are reserved to state and local authority by Section 6(e)(2) include, but are not limited to, the following:

1. Controls on the manner of operation of products.
2. Controls on the time of day or night in which products may be operated.
3. Controls on the places in which products may be operated.
4. Controls on the number of products which may be operated together.
5. Controls on noise emissions from the property on which products are used.
6. Controls on the licensing of products.
7. Controls on environmental noise level.

EPA stronly encourages state and local authorities to adopt and enforce laws and ordinances which complement this Federal motorcycle noise rulemaking. The Agency specifically urges in-use noise regulations which are consistent with reasonable operation of Federally-regulated vehicles. Restrictions on the registration of off-road motorcycles for highway operations are also encouraged, as are vehicle inspection programs which involve either stationary sound level testing or visual inspection of motorcycle exhaust systems.

8.0 Future Intent

EPA is pursuing a strategy through which products that are major contributors to overall environmental noise will be identified and subsequently controlled. This coordinated approach is necessary because a number of different noise sources may be operating in residential neighborhoods at the same time, and the quieting of only one such source may not in itself be sufficient to reduce the environmental noise to a level the Agency believes is requisite to protect the public health and welfare.

As indicated in the first EPA Report on Identification of Major Sources of Noise (39 FR 22297–99, June 21, 1974), the principal candidates for potential future regulatory efforts are known.

Surface tranportation noise is considered by EPA as one of the major contributors to environmental noise levels on a national basis. To further reduce this major national noise source, the Agency intends to continue its investigations pursuant to noise regulatory actions for other surface transportation vehicles. Consequently, the levels specified for the standard in this rulemaking are consistent with the Agency's objective of ultimately reducing the total noise emitted from all surface tranportation vehicles.

The Agency also plans further regulatory action on other noise sources. These include wheel and crawler tractors, pavement breakers and rock drills, and lawnmowers.

EPA believes that the motorcycle standards are necessary to protect the public health and welfare and are achievable through use of best available technology, taking into account the cost of compliance. However, as technological advances occur, lower levels may be achievable. EPA will consider all new information and data which become available or are presented to it, and may subsequently revise this regulation. The Agency, however, has no current plans to further lower the noise standards for motorcycles and does not foresee doing so in the near future.

9.0 Reporting and Recordkeeping Requirements

The reporting and recordkeeping requirements of this regulation are detailed in §§ 205.161 and 205.172.

Under the EPA's new "sunset" policy for reporting requirements in regulations, the reporting requirements in this regulation will automatically expire five years after implementation of the January 1, 1986 standard unless the Administrator extends them. This provision is prescribed in §§ 205.161(c) and 205.172(c).

10.0 Evaluation Plan

EPA intends to review the effectiveness and need for continuation of the provisions contained in this action no more than five years after the effective date of the final step standard of this regulation. In particular, the Agency will solicit comments from affected parties with regard to actual costs incurred and other burdens associated with compliance and will also review noise data to evaluate the effectiveness of the regulation after it has gone into effect.

11.0 Supporting Information

EPA has determined that promulgation of this regulation constitutes a significant action. Accordingly, the Agency has prepared the Regulatory Analysis required by Executive Order 12044. This analysis is entitled "Regulatory Analysis of the Noise Emission Regulation for Motorcycles and Motorcycle Exhaust Systems," EPA 550/9-80-217. Included with this Regulatory Analysis is an Environmental Impact Statement which presents the effects of the regulation. These documents may be obtained from Mr. Charles Mooney, U.S. Environmental Protection Agency, EPA Public Information Center (PM-215), Room 2194 D, 401 M Street SW., Washington, D.C. 20460.

This regulation is promulgated under the authority of Sections 6, 10, 11, 13, and 15 of the Noise Control Act. (Pub. L. 92-574, 86 Stat. 1237, 1242, 1244, and 1245 (42 U.S.C. 4905, 4909, 4910, 4912, and 4914)).

Dated: December 19, 1980.

Douglas M. Costle,

Administrator.

PART 205—TRANSPORTATION EQUIPMENT NOISE

In consideration of the foregoing, 40 CFR Part 205 is amended by adding Subparts D and E as follows:

Subpart D—Motorcycles

Sec.
205.150 Applicability.
205.151 Definitions.
205.152 Noise emission standards.
205.153 Engine displacement.
205.154 Consideration of alternative test procedures.
205.155 Motorcycle class and manufacturer abbreviation.
205.156 [Reserved]
205.157 Production verification.
205.157-1 General requirements.
205.157-2 Production verification procedures.
205.157-3 Configuration identification.
205.157-4 Production verification report; required data.
205.157-5 Test vehicle selection.
205.157-6 Test preparation.
205.157-7 Testing.
205.157-8 Changes to, addition of and deviation from a vehicle configuration during the model year.
205.157-9 Production verification based on data from previous model years.
205.157-10 Order to cease distribution.
205.158 Labeling requirements.
205.159 Testing by the Administrator.
205.160 Selective enforcement auditing (SEA) requirements.
205.160-1 Test request.
205.160-2 Test sample selection.
205.160-3 Test sample preparation.
205.160-4 Testing procedures.
205.160-5 Reporting of the test results.
205.160-6 Passing or failing under SEA.
205.160-7 Continued testing.
205.160-8 Prohibition of distribution in commerce; manufacturer's remedy.
205.161 Maintenance of records: submittal of information.
205.162 In-use requirements.
205.162-1 Warranty.
205.162-2 Tampering.
205.162-3 Instructions for maintenance, use, and repair.
205.162-4 Rentention of durability records.
205.163 Recall of noncomplying motorcycles; relabeling of mislabeled motorcycles.

Authority: Sec. 6 of the Noise Control Act (42 U.S.C. 4905) and additional authority as specified.

Subpart E—Motorcycle Exhaust Systems.

205.164 Applicability.
205.165 Definitions.
205.166 Noise emission standards.
205.167 Consideration of alternative test procedures.
205.168 Production verification.
205.168-1 General requirements.
205.168-2 Production verification procedures.
205.168-3 Production verification report; required data.
205.168-4 Test exhaust system selection.
205.168-5 Test exhaust system preparation.
205.168-6 Test motorcycle selection.
205.168-7 Test motorcycle preparation.
205.168-8 Testing.
205.168-9 Changes to, addition of, and deviation from an exhaust system category or motorcycle class during the model year.
205.168-10 Production verification based on data from previous model years.
205.168-11 Order to cease distribution.
205.169 Labeling requirements.
205.170 Testing by the Administrator.
205.171 Selective enforcement auditing (SEA) requirements.
205.171-1 Test request.
205.171-2 Test exhaust system sample selection.
205.171-3 Test motorcycle sample selection.
205.171-4 Test exhaust system preparation.
205.171-5 Test motorcycle preparation.
205.171-6 Test procedures.
205.171-7 Reporting of the test results.
205.171-8 Passing or failing under SEA.
205.171-9 Continued testing.
205.171-10 Prohibition on distribution in commerce; manufacturer's remedy.
205.172 Maintenance of records; submittal of information.
205.173 In-use requirements.
205.173-1 Warranty.
205.173-2 Tampering.
205.173-3 Warning statement.
205.173-4 Information sheet.
205.173-5 Retention of durability records.
205.174 Remedial orders.
Appendix I Motorcycle Noise Emission Test Procedure
Appendix I-1 Test Procedure for Street and Off-road Motorcycles
Appendix I-2 Test Procedure for Street Motorcycles That Meet the Definition of § 205.151(a)(2)(ii) (Moped-type street motorcycles)
Appendix II Sampling Tables

Authority: Sec. 6 of the Noise Control Act (42 U.S.C. 4905) and additional authority as specified.

Subpart D—Motorcycles

§ 205.150 Applicability.

(a) Except as otherwise provided in these regulations, the provisions of this subpart apply to 1983 and subsequent model year motorcycles manufactured after December 31, 1982, which meet the definition of "new product" in the Act.

(b) The provisions of this subpart do not apply to electric or battery-powered motorcycles.

(c) Except as provided in § 205.158, the provisions of this subpart do not apply to competition motorcycles as defined in § 205.151(a)(3).

§ 205.151 Definitions.

(a) As used in this subpart and in Subpart E, all terms not defined herein shall have the meaning given them in the Act or in Subpart A of this part.

(1) "Motorcycle" means any motor vehicle, other than a tractor, that:

(i) Has two or three wheels;

(ii) Has a curb mass less than or equal to 680 kg (1499 lb); and

(iii) Is capable, with an 80 kg (176 lb) driver, of achieving a maximum speed of at least 24 km/h (15 mph) over a level paved surface.

(2) "Street motorcycle" means:

(i) Any motorcycle that:

(A) With an 80 kg (176 lb) driver, is capable of achieving a maximum speed of at least 40 km/h (25 mph) over a level paved surface; and

(B) Is equipped with features customarily associated with practical street or highway use, such features including but not limited to any of the following: stoplight, horn, rear view mirror, turn signals: or

(ii) Any motorcycle that:

(A) Has an engine displacement less than 50 cubic centimeters;

(B) Produces no more than two brake horse power;

(C) With a 80 kg (176 lb) driver, cannot exceed 48 km/h (30 mph) over a level paved surface.

(3) "Competition motorcycle" means any motorcycle designed and marketed solely for use in closed course competition events.

(4) "Off-road motorcycle" means any motorcycle that is not a street motorcycle or competition motorcycle.

(5) "Acceleration test procedure" means the measurement methodologies specified in Appendix I.

(6) "Acceptable quality level" (AQL) means the maximum allowable average percentage of vehicles or exhaust systems that can fail sampling inspection under a Selective Enforcement Audit.

(7) "Acoustical Assurance Period" (AAP) means a specified period of time or miles driven after sale to the ultimate purchaser during which a newly manufactured vehicle or exhaust system, properly used and maintained, must continue in compliance with the Federal standard.

(8) "Advertised Engine Displacement" means the rounded off volumetric engine capacity used for marketing purposes by the motorcycle manufacturer.

(9) "Category" means a group of vehicle configurations which are identical in all material aspects with respect to the parameters listed in § 205.157–2 of this subpart.

(10) "Class" means a group of vehicles which are identical in all material aspects with respect to the parameters listed in § 205.155 of this subpart.

(11) "Closed course competition event" means any organized competition event covering an enclosed, repeated or confined route intended for easy viewing of the entire route by all spectators. Such events include short track, dirt track, drag race, speedway, hillclimb, ice race, and the Bonneville Speed Trials.

(12) "Closing rpm" means the engine speed in Figure 2 of Appendix I.

(13) "Configuration" means the basic classification unit of a manufacturer's product line and is comprised of all vehicle designs, models or series which are identical in all material aspects with respect to the parameters listed in § 205.157–3 of this subpart.

(14) "Engine displacement" means volumetric engine capacity as defined in § 205.153.

(15) "Exhaust system" means the combination of components which provides for the enclosed flow of exhaust gas from the engine exhaust port to the atmosphere. "Exhaust system" further means any constituent components of the combination which conduct exhaust gases and which are sold as separate products. "Exhaust System" does not mean any of the constituent components of the combination, alone, which do not conduct exhaust gases, such as brackets and other mounting hardware.

(16) "Failing vehicle" means a vehicle whose noise level is in excess of the applicable standard.

(17) "Maximum rated RPM" means the engine speed measured in revolutions per minute (RPM) at which peak net brake power (SAE J–245) is developed for motorcycles of a given configuration.

(18) "Model specific code" means the designation used for labeling purposes in §§ 205.158 and 205.169 for identifying the motorcycle manufacturer, class, and "advertised engine displacement," respectively.

(19) "Model year" means the manufacturer's annual production period, which includes January 1 of any calendar year, or if the manufacturer has no annual production period, the term "model year" shall mean the calendar year.

(20) "Motorcycle noise level" means the A-weighted noise level of a motorcycle as measured by the acceleration test procedure.

(21) "Noise control system" means any vehicle part, component or system, the purpose of which includes control or the reduction of noise emitted from a vehicle, including all exhaust system components.

(22) "Noise emission standard" means the noise levels in § 205.152 or § 205.166.

(23) "Noise emission test" means a test conducted pursuant to a measurement methodology specified in this subpart.

(24) "Production verification vehicle" means any vehicle selected for testing, tested or verified according to the production verification requirements delineated in this subpart.

(25) "Serial number" means the identification number assigned by the manufacturer to a specific production unit.

(26) "Tampering" means the removal or rendering inoperative by any person, other than for purposes of maintenance, repair, or replacement, of any device or element of design incorporated into any product in compliance with regulations under Section 6, prior to its sale or delivery to the ultimate purchaser or while it is in use; or the use of a product after such device or element of design has been removed or rendered inoperative by any person.

(27) "Test vehicle" means a vehicle in a Selective Enforcement Audit test sample or a production verification vehicle.

(28) "Tractor" means for the purposes of this subpart, any two or three wheeled vehicle used exclusively for agricultural purposes, or for snow plowing, including self-propelled machines used exclusively in growing, harvesting or handling farm produce.

(29) "Vehicle" means any motorcycle regulated pursuant to this subpart.

(30) "Warranty" means the warranty required by Section 6(d)(1) of the Act.

§ 205.152 Noise emission standards.

(a) *Noise emission standards.* (1) Street motorcycles of the following and subsequent model years must not produce noise emissions in excess of the levels indicated:

(i) Street motorcycles other than those that meet the definition of § 205.151(a)(2)(ii):

	A-weighted noise level (dB)
Model Year:	
(A) 1983	83
(B) 1986	80

(ii) Street motorcycles that meet the definition of § 205.151(a)(2)(ii) (moped-type street motorcycles):

	A-weighted noise level (dB)
Model Year:	
(A) 1983	70

(2) Off-road motorcycles of the following and subsequent model years must not produce noise emissions in excess of the levels indicated:

(i) Off-road motorcycles with engine displacements of 170 cc and lower:

Motorcycle model year	A-weighted noise level (dB)
(A) 1983	83
(B) 1986	80

(ii) Systems designed and marketed for use on off-road motorcycles with

	A-weighted noise level (dB)
Model Year:	
(A) 1983	86
(B) 1986	82

(3) Street motorcycles must be designed, built and equipped so that, when properly maintained and used, they will not produce noise emissions in excess of the levels specified in paragraph (a)(1) of this section, for an Acoustical Assurance Period of one year or a distance of 6000 km (3730 mi) after the time of sale to the ultimate purchaser, whichever occurs first.

(4) Off-road motorcycles must be designed, built and equipped so that, when properly maintained and used, they will not produce noise emissions in excess of the levels specified in paragraph (a)(2), of this section, for an Acoustical Assurance Period of one year or a distance of 3000 km (1865 mi) after the time of sale to the ultimate purchaser, whichever occurs first.

(5) At the time of sale to the ultimate purchaser, all products must comply with the standards set forth in paragraphs (a) (1) and (2) of this section.

(b) *Measurement procedure.* (1) The standards set forth in paragraph (a) of this section refer to noise emissions as measured in accordance with the measurement methodology specified in Appendix I-1 for all motorcycles except those street motorcycles that meet the definition of § 205.151(a)(2)(ii).

(2) The standards set forth in paragraph (a) of this section for street motorcycles that meet the definition of § 205.151(a)(2)(ii) (moped-type street motorcycles) refer to noise emissions measured in accordance with the measurement methodology specified in Appendix I-2.

(c) *Low noise emission product standard.* For the purpose of Low-Noise-Emission Product certification pursuant to 40 CFR Part 203, motorcycles procured by the Federal government after the following dates must not produce noise emissions in excess of the noise levels indicated:

(1) For street motorcycles with engine displacement greater than 170 cc:

Motorcycle model year	A-weighted noise level (dB)
Date:	
(i) January 1, 1982	73
(ii) January 1, 1989	71

(2) For off-road motorcycles with engine displacements greater than 170 cc:

Motorcycle model year	A-weighted noise level (dB)
Date:	
(i) January 1, 1982	75

(3) For off-road motorcycles with engine displacement 170 cc and lower and street motorcycles with engine displacement 170 cc and lower that do not meet the definition of § 205.151(a)(2)(ii):

Motorcycle model year	A-weighted noise level (dB)
Date:	
(i) January 1, 1982	71

(4) For street motorcycles that meet the definition of § 205.151(a)(2)(ii) (moped-type street motorcycles):

Motorcycle model year	A-weighted noise level (dB)
Date:	
(i) January 1, 1982	60

These levels refer to noise emissions as measured in accordance with the measurement methodologies specified in Appendix I. LNEP's must also meet all requirements contained in paragraphs (a) (3), (4), and (5), of this section.

(Secs. 10 and 15 of the Noise Control Act, (42 U.S.C. 4909, 4914))

§ 205.153 Engine displacement.

(a) Engine displacement must be calculated using nominal engine values and rounded to the nearest whole cubic centimeter, in accordance with American Society for Testing Materials (ASTM) E 29-67.

(b) For rotary engines, displacement means the maximum volume of a combustion chamber between two rotor tip seals minus the minimum volume of that combustion chamber between those two rotor seals times three times the number of rotors.

cc=(Maximum chamber volume−minimum chamber volume) × 3 × number of rotors.

§ 205.154 Consideration of alternative test procedures.

The Administrator may approve applications from manufacturers of motorcycles for the approval of test procedures which differ from those contained in this subpart so long as the alternative procedures have been demonstrated to correlate with the prescribed procedure. To be acceptable, alternative test procedures must be such that the test results obtained will identify all those test motorcycles which would not comply with the noise emission standards prescribed in § 205.152 when tested in accordance with the measurement methodology specified in Appendix I. After approval by the Administrator, testing conducted by manufacturers using alternative test procedures will be accepted by the Administrator for all purposes including, but not limited to, production verification testing, and selective enforcement audit testing.

§ 205.155 Motorcycle class and manufacturer abbreviation.

(a) Motorcycles must be grouped into classes determined by separate combinations of the following parameters:

(1) Engine type:

(i) Gasoline—two stroke.

(ii) Gasoline—four stroke.

(iii) Gasoline—rotary.

(iv) Other.

(2) Engine displacement.

(3) Engine configuration:

(i) Number of cylinders.

(ii) Cylinder arrangement (i.e., in line, opposed, etc.)

(4) Exhaust system:

(i) Muffler: (A) Type, (B) Location, (C) Number.

(ii) Expansion chambers: (A) Location, (B) Size.

(iii) Spark arrestors.

(iv) Other exhaust system components.

(Sec. 13 of the Noise Control Act (42 U.S.C. 4912))

§ 205.156 [Reserved]

§ 205.157 Production verification (PV).

§ 205.157-1 General Requirements.

(a) Each manufacturer of vehicles manufactured for distribution in commerce in the United States which are subject to the standards prescribed in this subpart and not exempted in accordance with Subpart A, § 205.5:

(1) Must verify each vehicle in accordance with the production verification procedures described in this subpart;

(2) Must submit a product verification report, as required by § 205.157-4 of this subpart;

(3) Must label each vehicle in accordance with the requirements of § 205.158 of this subpart; and

(4) Must ensure that each vehicle conforms to the applicable noise emission standard establishd in § 205.152 of this subpart.

(b) The requirements of paragraph (a) of this section apply to new products which conform to the definition of vehicles in these regulations and at the time such new products are assembled to that state of completeness in which the manufacturer sends them to a subsequent manufacturer or otherwise distributes them in commerce.

(c) A subsequent manufacturer of a new vehicle need not fulfill the requirements of paragraphs (a) (1), (2) or (3) of this section where such requirements have already been complied with by a prior manufacturer.

(d) The manufacturer who is required to conduct product verification testing to demonstrate compliance with a particular standard, must satisfy all other provisions of this subpart applicable to that standard, including but not limited to, record keeping, reporting and in-use requirements.

(Secs. 10 and 13 of the Noise Control Act (42 U.S.C. 4909 and 4912))

§ 205.157-2 Production verification procedures.

(a)(1) Prior to distribution in commerce of vehicles of a specific configuration, the first manufacturer of the vehicles shall verify the configuration in accordance with this subpart.

(2) Notwithstanding paragraph (a)(1) of this section, the manufacturer may distribute in commerce vehicles of that configuration for up to 90 days if weather or other conditions beyond the control of the manufacturer make production verification of a configuration impossible and if the following conditions are met:

(i) The manufacturer performs the tests required under paragraphs (b) or (c) of this section on such configuration as soon as conditions permit;

(ii) The manufacturer maintains records of the conditions which make production verification impossible; and

(iii) If on the 45th day following distribution in commerce of vehicles of that configuration, the manufacturer has not performed the tests required by paragraphs (b) or (c) of this section, the manufacturer within 5 days notifies the Administrator in writing that such vehicles have been distributed in commerce and provides to the Administrator documentation of the conditions which have made production verification impossible.

(3) At any time following receipt of notice under paragraph (a)(2)(iii) of this section with respect to a configuration, the Administrator may require that the manufacturer ship test vehicles to an EPA test facility for the required production verification testing.

(b) The production verification requirements with regard to each vehicle configuration consist of:

(1) Testing in accordance with § 205.157-7 of a vehicle selected in accordance with § 205.157-5;

(2) Compliance of the test vehicle with the applicable standard, when tested in accordance with Appendix I; and

(3) Submission of a production verification report pursuant to § 205.157-4.

(c)(1) In lieu of testing vehicles of every configuration as described in paragraph (b) of this section, the manufacturer may elect to verify the configuration based on representative testing. The requirements of representative testing are:

(i) Grouping configurations into categories where each category is determined by a separate combination of at least the following parameters (a manufacturer may use more parameters):

(A) Engine type: (*1*) Gasoline-two stroke; (*2*) gasoline-four stroke; (*3*) gasoline-rotary; and (*4*) other.

(B) Engine displacement.

(C) Engine configuration: (*1*) Number of cylinders; and (2) cylinder arrangement (i.e., in line, opposed, etc.)

(ii) Identifying the configuration within each category which emits the highest A-weighted sound level (in dB).

(iii) Testing in accordance with Appendix I of a vehicle of the configuration identified pursuant to paragraph (c)(1)(ii) of this section selected in accordance with § 205.157-5.

(iv) Demonstrating compliance of that vehicle with the applicable standard when tested in accordance with the test procedure specified in Appendix I; and

(v) Submission of a production verification report pursuant to § 205.157-4.

(2) If there has been compliance with the requirements of paragraph (c)(1), of this section, all those configurations contained within a category are considered to be represented by the tested vehicle and are considered to be production verified.

(3) If there has been compliance with all other requirements of paragraph (c)(1) of this section, except that the manufacturer tests a configuration which does not have the highest noise level in a category (as identified in paragraph (c)(1)(ii) of this section), all those configurations in the category which have noise levels no greater than that of the tested configuration are considered to be production verified. However a manufacturer must production verify according to the requirements of paragraphs (b) or (c) of this section any configurations in the category which have a higher noise level than that of the configuration tested.

(d) A manufacturer may elect to production verify all or part of his product line using representative testing pursuant to paragraph (c) of this section.

(e) The manufacturer has the following alternatives if any test vehicle is determined to not be in compliance with applicable standards:

(1) Delete the configuration from which the test vehicle was selected from the production verification report. Configurations so deleted may be included in a later report under § 205.157-4. However, in the case of representative testing, a new test

vehicle from another configuration must be selected and production verified according to the requirements of paragraph (c) of this section, in order to production verify the other configurations in that category originally represented by the vehicle that did not comply; or

(2) Modify the test vehicle and demonstrate by testing that it meets applicable standards. All modifications and test results must be reported in the production verification report. The manufacturer must modify all production vehicles of the same configuration in the same manner as the test vehicle before distribution into commerce.

(f) Upon request by the Director of the Noise and Radiation Enforcement Division, the manufacturer shall notify the Director of any production verification testing scheduled by the manufacturer pursuant to this section so that EPA Enforcement Officers or other employees of the Agency may be present to monitor or conduct the testing in lieu of the manufacturer.

(Secs. 10 and 13 of the Noise Control Act (42 U.S.C. 4909, 4912))

§ 205.157-3 Configuration identification

(a) A separate vehicle configuration shall be determined by each combination of the following parameters:

(1) Exhaust system (engine): (i) Mufflers; (ii) expansion chambers; (iii) spark arrestors; and (iv) other exhaust system components.

(2) Air induction system (engine): (i) Intake muffler; (ii) intake ducting; and (iii) air cleaner element.

(3) Vehicle drive train: (i) Chain; and (ii) shaft.

(4) Transmission gear ratio: (i) Standard transmission; and (ii) automatic transmission.

(5) Cooling system configuration: (i) Natural air cooled; (ii) liquid cooled; and (iii) forced air cooled.

(6) Category parameters listed in § 205.157-2.

(b) [Reserved]

(Sec. 13 of the Noise Control Act (42 U.S.C. 4912))

§ 205.157-4 Production verification report; required data.

(a) Before the distribution in commerce of any product to which this regulation applies, the manufacturer must submit a production verification report to the Director, Noise and Radiation Enforcement Division (EN-387), U.S. Environmental Protection Agency, Washington, D.C. 20460.

(b) The report must be signed by an authorized representative of the manufacturer and must include the following:

(1) The name, location, and description of the manufacturer's noise emission test facilities which meet the specifications of Appendix I and are used to conduct testing pursuant to this subpart. A test facility that has been described in a previous submission under this subpart need not be described again, but must be identified as such.

(2) A description of normal predelivery maintenance procedure.

(3) A description of all vehicle configurations, including the model specific code applicable for each configuration, as determined in accordance with § 205.158, to be distributed in commerce by the manufacturer. This description must include a list identifying or defining any device or element of design (including its location and method of operation) incorporated into vehicles for the purpose of noise control and any device that affects noise emission from the vehicle and does not operate during the normal operating modes of the vehicle. The manufacturer may satisfy the vehicle configuration description requirements of this paragraph by submitting as part of the production verification report a copy of sales literature that describes the product line including options and supplementing this literature with any additional information necessary to fulfill the requirements of this paragraph. If a manufacturer elects to production verify pursuant to § 205.157-2(c), the configuration within each category which is estimated to have the highest A-weighted noise level at the end of the Acoustical Assurance Period must be identified. The manufacturer may estimate the noise level based on his best technical judgment, test data, or both. The criteria used to estimate each noise level must be stated with the estimates.

(4) The following information for each noise emission test conducted:

(i) The individual record for the test vehicles required by § 205.161(a)(2) for all official tests conducted in accordance with § 205.157-7 including, for each invalid test, the reason for invalidation.

(ii) A complete description of any preparation, maintenance or testing which could affect the noise emissions of the vehicle, and which was performed on the test vehicle but will not be performed on all other production vehicles, and

(iii) The reason for replacement where a replacement vehicle was necessary, and test results, if any, for replaced vehicles.

(5) A complete description of the sound data acquisition system if other than those specified in Appendix I.

(6) For each configuration a sample of the completed label which is required under § 205.158 of this Subpart. The label must be completed in accordance with § 205.158(a)(5).

(7) The following statement and endorsement:

"This report is submitted pursuant to Section 6 and Section 13 of the Noise Control Act of 1972. To the best of (company name) knowledge, all testing for which data are reported here was conducted in strict conformance with applicable regulations under 40 CFR Parts 205 *et seq.*, all the data reported here are a true and accurate representation of such testing and all other information reported here is true and accurate. I am aware of the penalties associated with violations of the Noise Control Act of 1972 and the regulations thereunder. (authorized representative)."

(c) Where a manufacturer elects to submit separate production verification reports for portions of his product line as provided in paragraph (a) of this section, information provided in previous reports need not be resubmitted. Information necessary to update or make current previously submitted information must be submitted.

(d) Any change with respect to information reported under this section must be reported as soon as the information becomes available.

(Secs. 10 and 13 of the Noise Control Act (42 U.S.C. 4909 and 4912))

§ 205.157-5 Test vehicle selection.

Test vehicles of a configuration for which production verification testing is required by § 205.157-1 must be assembled using the manufacturer's normal production processes and intended for distribution in commerce.

(Secs. 10, 13 of the Noise Control Act (42 U.S.C. 4909, 4912))

§ 205.157-6 Test preparation.

(a) Before the official test, the test vehicle selected in accordance with § 205.157-5 must not be prepared, tested, modified, adjusted, or maintained in an manner unless such preparation, tests, modifications, adjustments or maintenance (1) are part of the manufacturer's prescribed manufacturing and inspection procedures, and are documented in the manufacturer's internal vehicle assembly and inspection procedures, (2) are required or permitted under this

subpart, or (3) are approved in advance by the Administrator.

(b) For purposes of this section and § 205.157-5, prescribed manufacturing and inspection procedures include quality control testing and assembly procedures normally performed by the manufacturer on like products during early production if the resulting testing is not biased by this procedure. In the case of imported products, the manufacturer may perform adjustments, preparations, modification or tests normally performed at the port of entry by the manufacturer to prepare the vehicle for delivery to a dealer or customer.

(c) Equipment or fixtures necessary to conduct the test may be installed on the vehicle if such equipment or fixtures have no effect on the noise emissions of the vehicle, as determined by the measurement methodology.

(d) In the event of a vehicle malfuction (i.e., failure to start, etc.) the manufacturer may perform the maintenance that is necessary to enable the vehicle to operate in a normal manner. This maintenance must be documented and reported in the PV report on that vehicle's configuration prepared and submitted by the manufacturer.

(e) No quality control, quality assurance testing, assembly or selection procedures may be used on the test vehicle or any portion of the test vehicle including parts and subassemblies, unless such quality control, quality assurance testing, assembly or selection procedures (1) are used normally during the production and assembly of all other vehicles of this configuration which will be distributed in commerce, (2) are required or permitted under this subpart or (3) are approved in advance by the Administrator.

(Sec. 13 of the Noise Control Act (42 U.S.C. 4912))

§ 205.157-7 Testing.

(a) The manufacturer shall conduct one valid test in accordance with the test procedures specified in Appendix I of this subpart for each vehicle selected for production verification testing.

(b) The manufacturer shall not perform any maintenance on the test vehicle, except as provided for by § 205.157-6.

(c) If a vehicle is unable to complete the noise test, the manufacturer may replace the vehicle. Any replacement vehicle must be a production vehicle of the same configuration as the replaced vehicle or a noisier configuration and will be subject to all the provisions of these regulations. Any replacement must be reported in the production verification report including the reason for the replacement.

(d) If a vehicle fails to comply with the standards of this subpart when tested in accordance with the procedures specified in paragraph (a) of this section, the manufacturer must proceed in accordance with § 205.157-2(e) of this subpart.

(Sec. 13 of the Noise Control Act (42 U.S.C. 4912))

§ 205.157-8 Changes to, addition of, and deviation from a vehicle configuration during the model year.

(a) Any change to a configuration with respect to any of the parameters stated in § 205.157-3 constitutes the addition of a new and separate configuration or category to the manufacturer's product line.

(b) (1) When a manufacturer introduces a new category or configuration to his product line, he must proceed in accordance with § 205.157-2.

(2) Where the configuration to be added can be grouped within a verified category and is estimated to have a lower A-weighted noise level than a previously verified configuration within the same category then the manufacturer may submit a report according to § 205.157-4 with respect to the new configuration, and the configuration will be considered verified.

(Sec. 13 of the Noise Control Act (42 U.S.C. 4912))

§ 205.157-9 Production verification based on data from previous model years.

(a)(1) Except as provided in paragraph (a)(2) of this section, production verification of each configuration will not be required for subsequent model years when the manufacturers' initial production verification noise emission level is at least 2 dB below the noise emission standard in effect for that model year and when the manufacturer has not made any changes (which increase the noise emission level) to the noise control components or elements of design used on that configuration.

(2) Production verification of each configuration will be required for those model years when the more stringent noise emission standards become effective.

(b) For those configurations whose initial PV noise emission level is less than 2 dB below the standard in effect, production verification will be required when production of that configuration commences each model year, unless the Administrator, upon request by the manufacturer, permits the use of production verification data for specific configurations from previous production verification reports. Considerations relevant to the Administrator's decision to permit production verification carry-over on these configurations may include, but are not limited to:

(1) The level of the standard in effect for the year in question.

(2) Performance based on production verification data from previous years.

(3) Performance based on data obtained from selective enforcement testing during previous years.

(4) The number and type of changes in the design of noise control features incorporated in the new models that affect the noise emission level.

(5) Any other noise emission test data that the manufacturer may wish to submit to support his request.

(Sec. 13 of the Noise Control Act (42 U.S.C. 4912))

§ 205.157-10 Order to cease distribution.

(a) If a category or configuration is found not to comply with this subpart because it has not been verified properly pursuant to § 205.157-2, the Administrator may issue an order to the manufacturer to cease distribution in commerce vehicles of that category or configuration. This order will not be issued if the manufacturer has made a good faith attempt to properly production verify the category or configuration and can establish such good faith.

(b) Any such order shall be issued after notice and opportunity for a hearing which will be held in accordance with 5 U.S.C. 554.

(Sec. 11 of the Noise Control Act (42 U.S.C. 4910))

§ 205.158 Labeling requirements.

(a)(1) The manufacturer of any vehicle subject to the production verification requirements of this subpart must, at the time of manufacture, affix a label, of the type specified in paragraph (a)(2), (3), and (4) of this section, to all such vehicles to be distributed in commerce.

(2) The label must be plastic or metal and be welded, riveted, or otherwise permanently attached in a readily visible position.

(3) The label must be affixed by the vehicle manufacturer who has production verified the vehicle, in such a manner that the label cannot be removed without destroying or defacing it, and must not be affixed to any piece of equipment that is easily detached from such vehicle.

(4) The label must be lettered in the English language in legible block letters and numerals, which must be of a color that contrasts with the background of the label.

(5) The label must contain the following information:

(i) The label heading: Motorcycle Noise Emission Control Information;

(ii) The statement:

This —— (model year) ——— (model specific code) motorcycle, —— (serial number), meets EPA noise emission requirements of —— (noise emission standard) dBA at —— (closing rpm) rpm by the Federal test procedure. Modifications which cause this motorcycle to exceed Federal noise standards are prohibited by Federal law. See owner's manual.

(6) The model specific code is limited to ten spaces which includes three spaces for the manufacturer's abbreviation (see paragraph 7 of this section), three spaces for the class identification, and four spaces for the advertised engine displacement respectively.

(7) All motorcycle manufacturers shall use the following abbreviations in their model specific code.

BMW	BMW
Bultaco	BUL
Can-Am Bombardier	CAB
Chaparral	CHA
Cheeta	CHE
Ducati	DUC
Fox	FOX
Harley Davidson	HAR
Heald	HEA
Hercules	HER
Hodaka	HOD
Honda	HON
Husqvarna	HUS
JAWA/CZ	JAW
Kawasaki	KAW
KTM	KTM
Laverda	LAV
Moto Benilli	BEN
Moto Guzzi	GUZ
Moto Morini	MOR
MV Agusta	MVA
Norton Triumph	TRI
Rokon	ROK
Suzuki	SUZ
Yamaha	YAM

(8) Moped manufacturers only shall use the following abbreviations in their model specific code.

AMF	AMF
Benelli	BEL
Califfo	CAL
Carabela	CAR
Cimatti	CIM
Columbia	COL
E-Z Rider	EZR
Flying Dutchman	FLY
Foxi	FOI
Gadabout	GAD
Garelli	GAR
Gitane	GIT
Honda	HON
Indian	IND
Intramotor	INT
Italvelo	ITA
Kreidler	KRE
Lazer	LAZ
Malagati	MAL
Morini	MOI
Motobecane/Solex	MBE
Moto Guzzi	GUZ
Negrini	NEG
Odyssey	ODY
Pacer	PAC
Pack-A-Way	PAK
Peugeot	PEU
Puch	PUC
Riviera	RIV
Sachs	SAC
Safari	SAF
Scorpion	SCO
Smity	SMI
Snark	SNA
Sori II	SON
Speed Bird	SPE
Sprinter	SPR
SuVega	SUV
Tomas	TOM
Vaespa	VES
Yankee Peddler	YAN

(9) If a new motorcycle manufacturer begins production of vehicles subject to this regulation, the Administrator will assign him a 3-letter manufacturer abbreviation as soon as reasonably practical after his existence is known to the Agency.

(b) Any vehicle manufactured in the United States solely for use outside the United States must be clearly labeled in accordance with the provisions of paragraphs (a)(2), and (3) and (4) of this section with the statement: "For Export Only".

(c) Any competition motorcycle as defined in § 205.151(a)(3), shall be labeled in accordance with the provisions of paragraphs (a)(1), (2), (3), and (4) of this section with the statement:

This motorcycle is designed for closed course competition use only. It does not conform to U.S. EPA motorcycle noise standards.

(d) It will be permissible for manufacturers to meet the requirements of this section by consolidating these labeling requirements with other government labeling requirements in one or more labels, provided the provisions of paragraphs (a) (2), (3) and (4) of this section are met.

(e) The manufacturer must maintain and provide to the Administrator upon request, such records which enable the Administrator to ascertain the month of manufacture.

(Secs. 10 and 13 of the Noise Control Act (42 U.S.C. 4909 and 4912))

§ 205.159 Testing by the Administrator.

(a)(1) In order for the Administrator to determine whether such vehicles or a manufacturer's test facility conform to applicable regulations, the Administrator may require that vehicles to be tested pursuant to the Act be submitted to him, at such place and time as he reasonably designates. He may designate the quantity of vehicles and the duration of time he reasonably requires for the purpose of conducting tests in accordance with test procedures described in Appendix I. The manner in which the Administrator conducts such tests, the EPA test facility, and the test procedures employed will be based upon good engineering practice and meet or exceed the requirements of Appendix I of the regulations.

(2) If the Administrator specifies that he will conduct such testing at the manufacturer's facility, the manufacturer shall make available instrumentation and equipment of the type required for test operations by these regulations. The Administrator may conduct such tests with his own equipment, having specifications equal to or exceeding the performance specifications of the instrumentation and equipment required in these regulations.

(3) The manufacturer may observe tests conducted by the Administrator pursuant to this section on vehicles produced by the manufacturer and may copy the data accumulated from such tests. The manufacturer may inspect any of the vehicles before and after testing by the Administrator.

(b)(1) If, based on tests conducted by the Administrator, or on other relevant information, the Administrator determines that the test facility does not meet the requirements of Appendix I (or the requirements for an alternative test procedure approved under 205.154), the Administrator will give notice to the manufacturer in writing of his determination and the reasons underlying it.

(2) The manufacturer may, at any time within 15 days after receipt of a notice issued under paragraph (b)(1) of this section, request a hearing conducted in accordance with 5 U.S.C. 554 on the issue of whether his test facility met the requirements as specified in Appendix I (or the alternative procedure). Such notice will not take effect until 15 days after its receipt by the manufacturer or, if a hearing is requested under this paragraph, until adjudication by the Administrative law judge.

(3) After any notice issued under paragraph (b)(1) of this section has taken effect, no data thereafter derived from that test facility will be acceptable for purposes of this subpart.

(4) The manufacturer may request in writing that the Administrator reconsider his determination under paragraph (b)(1) of this section based on data or information which indicates that changes have been made to the test facility and that those changes have resolved the reasons for disqualification.

(5) Within 10 working days after receipt of the manufacturer's request for reconsideration pursuant to paragraph (b)(4) of this section, the Administrator will notify the manufacturer of his determination and of the reasons underlyng it with regard to the requalification of the test facility.

(c) The Administrator will assume all reasonable costs associated with shipment of vehicles to the place designated pursuant to paragraph (a) of this section except with respect to:

(1) Any production verification testing performed at a place other than the manufacturer's facility as provided in § 205.157-2(a), or as a result of the manufacturer's not owning or having access to a test facility;

(2) Testing of a reasonable number of vehicles (i) for purposes of selective enforcement auditing under § 205.160, (ii) or if the manufacturer has failed to establish that there is a correlation between its test facility and the EPA test facility, (iii) or the Administrator has reason to believe, and provides the manufacturer with a statement of such reason, that the vehicles to be tested would fail to meet the standard prescribed in this subpart if tested at the EPA test facility even though they would meet such standard if tested at the manufacturer's test facility;

(3) Any testing performed during a period when a notice issued pursuant to paragraph (b) of this section is in effect;

(4) Any testing performed at a place other than the manufacturer's facility as a result of the manufacturer's failure to permit the Administrator to conduct or monitor testing as required by this subpart; and

(5) Testing of up to 10 percent of the manufacturer's production verification test vehicles for a model year if the Administrator determines testing these vehicles at the EPA test site is necessary to assure that a manufacturer has acted or is acting in compliance with the Act.

(Secs. 11 and 13 of the Noise Control Act (42 U.S.C. 4910 and 4912))

§ 205.160 Selective enforcement auditing (SEA) requirements.

§ 205.160-1 Test request.

(a) The Administrator will request all testing under § 205.160 by means of a test request addressed to the manufacturer.

(b) The test request will be signed by the Assistant Administrator for Enforcement or his designee. The test request will be delivered to the plant manager or other responsible official as designated by the manufacturer.

(c) The test request will specify the vehicle category, configuration or configuration subgroup selected for testing, the manufacturer's plant or storage facility from which the vehicles must be selected, and the time at which the vehicles must be selected. The test request will also provide for situations in which the selected category, configuration, or configuration subgroup is unavailable for testing. The test request may include an alternative category, configuration, or configuration subgroup designated for testing in the event that vehicles of the first specified category, configuration, or configuration subgroup are not available for testing because the vehicles are not being manufactured at the specified plant, are not being manufactured during the specified time, or are not being stored at the specified plant or storage facility.

(d)(1) If the manufacturer projects a yearly production of fewer than 50 vehicles of the specified category, configuration or configuration subgroup to be tested, then within five (5) days of receipt of the request, the manufacturer must notify the Administrator of such low volume production. The Administrator will then provide a revised test request specifying a testing plan which imposes no greater risk of failure (5%) at the acceptable quality level (10%) than the plan in Appendix II. Upon receipt of the revised test request, the manufacturer must select and test a sample of vehicles from the category, configuration or configuration subgroup specified in the test request in accordance with this subpart and the conditions specified in the test request.

(2) If the manufacturer produces 50 or more vehicles of the specified category, configuration or configuration subgroup per year, then upon receipt of the test request, the manufacturer must select and test a sample of vehicles from the category, configuration or configuration subgroup specified in the test request in accordance with this subpart and the conditions specified in the test request.

(e)(1) Any testing conducted by the manufacturer under a test request must be initiated within the time period specified in the test request; except that initiation may be delayed for increments of 24 hours or one business day where ambient test site weather conditions, or other conditions beyond the control of the manufacturer, in that 24-hour period, do not permit testing. The manufacturer must record the conditions for this period.

(2) The manufacturer must complete noise emission testing on a minimum of ten vehicles per day unless otherwise provided by the Administrator or unless ambient test site conditions permit only the testing of a lesser number in which case the ambient test site weather conditions for that period must be recorded.

(3) The manufacturer is allowed 24 hours to ship vehicles from a sample from the assembly plant to the testing facility if the facility is not located at the plant or in close proximity to the plant. The Administrator may approve more time based upon a request by the manufacturer accompanied by a satisfactory justification.

(f) The Administrator may issue an order to the manufacturer to cease distribution in commerce of vehicles of a specified category, configuration, or configuration subgroup being manufactured at a particular facility, if:

(1) The manufacturer refuses to comply with the provisions of a test request issued by the Administrator under this section; or

(2) The manufacturer refuses to comply with any of the requirements of this section.

(g) A cease distribution order will not be issued under paragraph (f) of this section if the manufacturer's refusal is caused by conditions and circumstances outside his control which render compliance with the provisions of a test request or with any other requirements of this section impossible. Conditions and circumstances outside the control of the manufacturer include, but are not limited to, the temporary unavailability of equipment and personnel needed to conduct the required tests caused by uncontrollable factors, such as equipment breakdown or failure or illness of personnel. Failure of the manufacturer to adequately plan for and provide the equipment and personnel needed to conduct the tests do not constitute uncontrollable factors. The manufacturer must bear the burden of establishing the presence of the conditions and circumstances required by this paragraph.

(h) Any order to cease distribution will be issued only after a notice and opportunity for a hearing in accordance with 5 U.S.C. 554.

(Secs. 11 and 13 of the Noise Control Act (42 U.S.C. 4910 and 4912))

§ 205.160-2 Test sample selection.

(a) Vehicles comprising the sample which are required to be tested under a test request in accordance with this subpart must be selected consecutively as they are produced. The provisions of § 205.157-7 (b) and (c) also pertain to this section.

(b) The Acceptable Quality Level (AQL) is 10 percent. The appropriate sampling plans associated with the designated AQL are contained in Appendix II or the test request.

(c) The vehicles of the category, configuration or configuration subgroup selected for testing must be assembled by the manufacturer for distribution in commerce using the manufacturer's normal production process.

(d) Unless otherwise indicated in the test request, the manufacturer must initiate testing with the vehicles of the

category, configuration or configuration subgroup specified in the test request which are next scheduled for production after receipt of the test request.

(e) The manufacturer must keep on hand all products in the test sample until the sample is accepted or rejected in accordance with § 205.160–6; except that vehicles actually tested and found to be in conformance with this regulation need not be kept.

(Sec. 13 of the Noise Control Act (42 U.S.C. 4912))

§ 205.160–3. Test sample preparation.

Prior to the official test, each test vehicle selected in accordance with § 205.160–2 must be prepared in accordance with § 205.157–6.

(Sec. 13 of the Noise Control Act (42 U.S.C. 4912))

§ 205.160–4 Testing procedures.

(a) The manufacturer must conduct one valid test in accordance with the appropriate test procedures specified in Appendix I, on each vehicle selected for testing under this subpart.

(b) No maintenance may be performed on test vehicles except as provided by § 205.160–3. In the event a vehicle is unable to complete the noise emission test, the manufacturer may replace the vehicle. Any replacement vehicle must be a production vehicle of the same category, configuration or subgroup as the vehicle which it replaced, and it is subject to all the provisions of this subpart.

(Sec. 13 of the Noise Control Act (42 U.S.C. 4912))

§ 205.160–5 Reporting of the test results.

(a)(1) The manufacturer must submit a copy of the test report for all testing conducted pursuant to § 205.160 at the conclusion of each 24-hour period during which testing is done.

(2) For each test conducted the manufacturer must provide the following information:

(i) Category, configuration or configuration subgroup identification where applicable;

(ii) Year, make, assembly date, and model of vehicle;

(iii) Vehicle serial number; and

(iv) Test results by serial numbers.

(b) In the case where an EPA Enforcement Officer is present during testing required by this subpart, the written reports requested in paragraph (a) of this section may be given directly to the Enforcement Officer.

(c) Within 5 days after completion of testing of an SEA, the manufacturer must submit to the Administrator a final report which will include the following:

(1) The name, location, and description of the manufacturer's noise emission test facilities which meet the specifications of Appendix I, and were utilized to conduct testing reported under this section, except, that a test facility that has been described in a previous submission under this subpart need not again be described, but must be identified as that facility.

(2) The following information for each noise emission test conducted:

(i) The individual records for the test vehicles required by § 205.161(a)(2) for all noise emission tests including for each invalid test, the reason for invalidation.

(ii) A complete description of any modification, repair, preparation, maintenance, or testing which could affect the noise emissions of the product and which was performed on the test vehicle but not performed on all other production vehicles; and,

(iii) The test results for any replaced vehicle and the reason for its replacement.

(3) A complete description of the sound data acquisition system if other than those specified in Appendix I.

(4) The following statement and endorsement:

This report is submitted pursuant to Section 6 and Section 13 of the Noise Control Act of 1972. To the best of——(company name) knowledge, all testing for which data are reported here was conducted in strict conformance with applicable regulations under 40 CFR Parts 205 *et seq.*, all the data reported here are a true and accurate representation of such testing, and all other information reported here is true and accurate. I am aware of the penalties associated with violations of the Noise Control Act of 1972 and the regulations thereunder.——(authorized representative).

(5) Additional information required by the test request.

(d) Information required to be submitted to the Administrator under this section must be sent to the following address: Director, Noise and Radiation Enforcement Division, (EN–387), U.S. Environmental Protection Agency, Washington, D.C. 20460.

(Sec. 13 of the Noise Control Act (42 U.S.C. 4912))

§ 205.160–6 Passing or failing under SEA.

(a) A failing vehicle is one whose measured noise level is in excess of the applicable noise emission standard in § 205.152.

(b) The number of failing vehicles in a sample determines whether the sample passes or fails (See applicable tables in Appendix II). If the number of failing vehicles is greater than or equal to the number of Column B, the sample fails. If the number of failing vehicles is less than or equal to the number in Column A, the sample passes.

(c) Pass or failure of an SEA takes place when a decision that a vehicle is a passing or failing unit is made on the last vehicle required to make a decision under paragraph (b) of this section.

(d) If the manufacturer passes the SEA, he will not be required to perform any additional testing on subsequent vehicles to satisfy the test request.

(e) The Administrator may terminate testing earlier than required in paragraph (b) of this section, based on a request by the manufacturer, accompanied by voluntarily ceasing distribution in commerce of vehicles from the category, configuration or configuration subgroup in question, manufactured at the plant which produced the products being tested. Before reinitiating distribution in commerce of that vehicle category, configuration or configuration subgroup from that plant, the manufacturer must take the action described in § 205.160–8(a) (1) and (2).

(Sec. 13 of the Noise Control Act (42 U.S.C. 4912))

§ 205.160–7 Continued testing.

(a) If an SEA failure occurs according to paragraph (b) of § 205.160–6, the Administrator may require that any or all vehicles of that category, configuration or configuration subgroup produced at that plant be tested before distribution in commerce.

(b) The Administrator will notify the manufacturer in writing of his intent to require continued testing of vehicles under paragraph (a) of this section.

(c) The manufacturer may request a hearing on the issues of whether the SEA was conducted properly; whether the criteria for SEA failure have been met; and the appropriateness or scope of a continued testing order. If a hearing is requested, the hearing will begin no later than 15 days after the date on which the Administrator received the hearing request. Neither the request for a hearing nor the fact that a hearing is in progress will affect the responsibility of the manufacturer to commence and continue testing required by the Administrator pursuant to paragraph (a) of this section.

(d) Any tested vehicle which demonstrates conformance with the applicable standard may be distributed into commerce.

(e) Any distribution into commerce of a vehicle which does not comply with the applicable standard is a prohibited act.

(Secs. 10 and 13 of the Noise Control Act (42 U.S.C. 4909 and 4912))

§ 205.160-8 Prohibition of distribution in commerce; manufacturer's remedy.

(a) The Administrator will permit the manufacturer to cease testing under § 205.160-7 after the manufacturer has taken the following actions:

(1) Submission of a written report to the Administrator which identifies the reason for the noncompliance of the vehicles, describes the problem and describes the proposed quality control or quality assurance remedies to be taken by the manufacturer to correct the problem or establishes that the requirements for an engineering change pursuant to § 205.157-8 have been completed, and

(2) Demonstration that the specified vehicle category, configuration or configuration subgroup has passed a retest conducted in accordance with § 205.160, and the conditions specified in the test request.

(b) The manufacturer may begin testing under paragraph (a)(2) of this section upon submitting the report required by paragraph (a)(1) of this section, and may cease continued testing upon making the demonstration required by paragraph (a)(2) of this section. The Administrator may require resumption of continued testing if he determines that the manufacturer has not satisfied the requirements of paragraphs (a) (1) and (2) of this section.

(c) Any vehicle failing the prescribed noise emission tests conducted pursuant to Appendix I may not be distributed in commerce until necessary adjustments or repairs have been made and the vehicle passes a retest.

(Secs. 10 and 13 of the Noise Control Act (42 U.S.C. 4909 and 4912))

§ 205.161 Maintenance of records: Submittal of information.

(a) Except as otherwise provided in the regulation, the manufacturer of any vehicle subject to any of the standards or procedures prescribed in this subpart shall establish, maintain and retain the following adequately organized and indexed records:

(1) General records:

(i) Identification and description by category, configuration, and class parameters of all vehicles in the manufacturer's product line for which testing is required under this subpart and the identification and description of all devices incorporated into the vehicle for the purpose of noise control and attenuation.

(ii) A description of any procedures other than those contained in this subpart used to perform noise emission tests on any test vehicle.

(iii) A record of the calibration of the acoustical instrumentation as described in Appendix I.

(iv) A record of the date of manufacture of each vehicle subject to this subpart, keyed to the serial number.

(2) Individual records for test vehicles:

(i) A complete record of all noise emission tests performed for Production Verification and Selective Enforcement Audit (except tests performed by EPA directly), including all individual worksheets and other documentation or exact copies relating to each test.

(ii) A record of the information required, recorded as described in Appendix I, and

(iii) A record and description of all repairs, maintenance and other servicing which were performed before successful testing of the vehicle pursuant to these regulations and which could affect the noise emissions of the vehicle, giving the date and time of the maintenance or service, the reason for it, the person authorizing it, and the names of supervisory personnel responsible for the conduct of the maintenance or service.

(3) A properly filed production verification report following the format prescribed by the Administrator in § 205.157-4 fulfills the requirements of paragraphs (a)(1) (i) and (ii) of this section.

(4) All records required to be maintained under this subpart must be retained by the manufacturer for a period of three (3) years from the production verification date. Records may be retained as hard copy or alternatively reduced to microfilm, punch cards, etc., depending on the record retention procedures of the manufacturer; however, when an alternative method is used, all information contained in the hard copy must be contained in the copy made by the alternative method.

(b) The manufacturer must, upon request, submit to the Administrator the following information with regard to new vehicle production:

(1) Number of vehicles, by category, configuration, or class scheduled for production for the time period designated in the request.

(2) Number of vehicles, by category, configuration, or class produced during the time period designated in the request.

(c) The reporting requirements of this regulation will no longer be effective after five (5) years from the last effective date of this regulation. However, the requirements will remain in effect if the Administrator is taking appropriate steps to repromulgate or modify the reporting requirements at that time.

(Sec. 13 of the Noise Control Act (42 U.S.C. 4912))

§ 205.162 In-use requirements.

§ 205.162-1 Warranty.

(a) The vehicle manufacturer who is required to production verify under this subpart must include in the owner's manual or in other information supplied to the ultimate purchaser the following statement:

NOISE EMISSIONS WARRANTY
[RESERVED]

(b) Not later than the date of submission of the production verification report required by § 205.157-4, the manufacturer must submit to the Administrator two (2) copies of all information provided to the ultimate purchaser which could reasonably be construed as impacting on the warranty required by paragraph (a) of this section as well as two (2) copies of each page on which the warranty appears.

(c) The manufacturer must submit two (2) representative copies of all information of a general nature, or modifications thereto, which is provided to dealers, zone representatives, or other agents of the manufacturer regarding the administration and application of the noise emission warranty. Information regarding noise emission warranty claims which is provided to a dealer or representative in response to a particular warranty claim or dealer inquiry is not considered to be information of a general nature, if such information does not receive broad distribution to dealers. Such information must be submitted not later than ten (10) days after distribution by the manufacturer.

(d) All information required to be sent to the Administrator pursuant to this section must be addressed to:

Director, Noise and Radiation Enforcement Division (EN-387), U.S. Environmental Protection Agency, Washington, D.C. 20460.

(Sec. 13 of the Noise Control Act (42 U.S.C. 4912))

§ 205.162-2 Tampering.

(a) For each model year and for each configuration of vehicles covered by this subpart, the manufacturer must submit to the Administrator a list of those acts which, in the manufacturer's estimation, might be done to the vehicle in use on more than an occasional basis and cause an increase in noise emissions above the standards prescribed in § 205.152. If, in the manufacturer's estimation, the same acts might be done for all configurations, and no additional

acts would be done on any one or more configurations, then the manufacturer may submit one list to cover his entire product line. The manufacturer must state his estimate, wherever possible, of the amount of increase in noise level each act may cause.

(b) The above information must be submitted to the Administrator within adequate time prior to the introduction into commerce of each configuration to allow for the development and printing of tampering lists, as provided in paragraphs (c) and (d) of this section.

(c) On the basis of the above information, the Administrator will develop a list of acts which, in his judgment, constitute the removal or rendering totally or partially inoperative, other than for purposes of maintenance, repair, or replacement, of noise control devices or elements of design of the vehicle. This list will be provided to the manufacturer by the Administrator within 30 days of the date on which the information required in paragraph (a) of this section is received by the Administrator. The list must be included in the statement to the ultimate purchaser as required by paragraph (d)(2) of this section. If the list is not provided by the Administrator within 30 days of the date on which the information required in paragraph (a) of this section is submitted, the manufacturer shall include only the statement in paragraph (d)(1) of this section until such time as the owner's manual is reprinted for other purposes.

(d) The manufacturer shall include in the owner's manual the following information:

(1) The statement:

TAMPERING WITH NOISE CONTROL SYSTEM PROHIBITED: Federal law prohibits the following acts or the causing thereof: (1) The removal or rendering inoperative by any person other than for purposes of maintenance, repair, or replacement, of any device or element of design incorporated into any new vehicle for the purpose of noise control prior to its sale or delivery to the ultimate purchaser or while it is in use, or (2) the use of the vehicle after such device or element of design has been removed or rendered inoperative by any person.

(2) The statement:

AMONG THOSE ACTS PRESUMED TO CONSTITUTE TAMPERING ARE THE ACTS LISTED BELOW

Immediately following this statement, the manufacturer must include the list developed by the Administrator under paragraph (c) of this section.

(e) Any act included in the list prepared pursuant to paragraph (c) of this section is presumed to constitute tampering; however, in any case in which a presumed act of tampering has been committed and it can be shown that such act resulted in no increase in the noise level of the vehicle or that the vehicle still meets the noise emission standard of § 205.152, the act will not constitute tampering.

(f) The provisions of this section are not intended to preclude any State or local jurisdiction from adopting and enforcing its own prohibitions against the removal or rendering inoperative of noise control systems on vehicles subject to this part.

(g) All information required by this section to be furnished to the Administrator must be sent to the following address: Director, Noise and Radiation Enforcement Division (EN-387), U.S. Environmental Protection Agency, Washington, D.C. 20460.

(Secs. 10, 13 of the Noise Control Act (42 U.S.C. 4909, 4912))

§ 205.162-3 Instruction for maintenance, use, and repair.

(a)(1) The manufacturer must provide to the purchaser of each vehicle covered by this subpart written instructions for the proper maintenance, use, and repair of the vehicle in order to provide reasonable assurance of the elimination or minimization of noise emission degradation throughout the life of the vehicle.

(2) The purpose of the instructions is to inform purchasers and mechanics of the acts necessary to reasonably assure that degradation of noise emission level is eliminated or minimized during the life of the vehicle. Manufacturers shall prepare the instructions with this purpose in mind. The instructions shall be clear and, to the extent practicable, written in non-technical language.

(3) The instructions must not be used to secure an unfair competitive advantage. They shall not restrict replacement equipment to original equipment or restrict service to dealer service unless such manufacturer makes public the performance specifications on such equipment.

(b) For the purpose of encouraging proper maintenance, the manufacturer must provide a record or log book which shall contain a schedule for the performance of all required noise emission control maintenance. Space must be provided in this record book so that the purchaser can note what maintenance was done, by whom, where, and when.

(c) Not later than the date of submission of the production verification report required by § 205.157-4, the manufacturer must submit to the Administrator two (2) copies of the maintenance instructions (including the record book) required by paragraphs (a) and (b) of this section.

(d)(1) The Administrator will require modifications to the instructions if they do not meet the requirements of paragraph (a) of this section.

(2) The manufacturer may file a petition for review of such modifications.

(3) The manufacturer's proposed instructions must be provided to the consumer pursuant to § 205.162-3(a)(1) pending review of the proposed instructions by the Agency.

(e) Information required to be submitted to the Administrator pursuant to this section shall be sent to the following address: Director, Noise and Radiation Enforcement Division (EN-387), U.S. Environmental Protection Agency, Washington, D.C. 20460.

(Sec. 13 of the Noise Control Act (42 U.S.C. 4912))

§ 205.162-4 Retention of durability records.

(a) Each manufacturer reponsible for compliance with the standards specified in § 205.152 must establish and maintain records for each vehicle configuration containing the information upon which the manufacturer relied in determining that the products will meet the standards throughout the acoustical assurance period.

(b) The records may include, but need not be limited to, the following:

(1) Durability data and actual noise testing on critical noise producing or attenuating components,

(2) Noise level deterioration curves on the entire vehicle,

(3) Data from products in actual use, or

(4) Engineering judgment.

(Sec. 13 of the Noise Control Act (42 U.S.C. 4912))

§ 205.163 Recall of noncomplying motorcycles; relabeling of mislabeled motorcycles.

(a) Pursuant to section 11(d)(1) of the Act, the Administrator may issue an order to the manufacturer to recall, repair, modify, or relabel any vehicles distributed in commerce which are not in compliance with this subpart.

(b) A recall order issued under this section shall be based upon a determination by the Administrator that vehicles of a specified category, configuration, or class which do not conform to the regulations or are improperly labeled have been distributed in commerce. This determination may be based on: (1) A technical analysis of the noise emission characteristics of the category, configuration, or class in question; or (2)

any other relevant information, including test data.

(c) For the purpose of this section, noise emissions are to be measured by the appropriate test procedure prescribed in Appendix I prior to sale or any other test which has been demonstrated to correlate with the prescribed test procedure in accordance with § 205.154.

(d) Any order to recall shall be issued only after notice and an opportunity for a hearing.

(e) All cost, including labor and parts, associated with the recall and repair or modification of noncomplying vehicles and relabeling of mislabeled vehicles under this section shall be borne by the manufacturer.

(f) This section shall not limit the discretion of the Administrator to take any other actions which are authorized by the Act.

(Sec. 11 of the Noise Control Act (42 U.S.C. 4910))

Subpart E—Motorcycle Exhaust Systems

§ 205.164 Applicability.

(a) Except as otherwise provided in these regulations, the provisions of this subpart apply to any motorcycle replacement exhaust system or motorcycle replacement exhaust system component which:

(1) Meets the definition of the term "new product" in the Act; and

(2) Is designed and marketed for use on any motorcycle subject to the provisions of Subpart D of this part.

(b) The provisions of § 205.169 additionally apply to the motorcycle exhaust systems originally installed on vehicles subject to the requirements of Subpart D of this part.

(c) The provisions of § 205.169(d)(3) additionally apply to motorcycle replacement exhaust systems manufactured after January 1, 1983 that are designed and marketed for use on motorcycles manufactured before January 1, 1983.

(d) Except as provided for in § 205.169, the provisions of this subpart do not apply to exhaust systems which are designed and marketed solely for use on competition motorcycles as defined in § 205.151(a)(3).

(e) The provisions of the subpart do not apply to exhaust header pipes sold as separate products.

§ 205.165 Definitions.

(a) As used in this subpart, all terms not defined herein have the meaning given them in subpart D or in the Act.

(1) "Category" means a group of exhaust systems which are identical in all material aspects with respect to the parameters listed in § 205.168 of this subpart.

(2) "Exhaust header pipe" means any tube of constant diameter which conducts exhaust gas from an engine exhaust port to other exhaust system components which provide noise attenuation. Tubes with cross connections or internal baffling are not considered to be "exhaust header pipes."

(3) "Failing exhaust system" means that, when installed on any Federally regulated motorcycle for which it is designed and marketed, that motorcycle and exhaust system exceed the applicable standards.

(4) "Federally regulated motorcycle" means, for the purpose of this subpart, any motorcyle subject to the noise standards of Subpart D of this part.

(5) "Federal standards" means, for the purpose of this subpart, the standards specified in § 205.152(a)(1), (2) and (3).

(6) "Production verification exhaust system" means any exhaust system selected for testing, tested or verified pursuant to the production verification requirements of this subpart.

(7) "Stock configuration" means that no modifications have been made to the orginal equipment motorcycle that would affect the noise emissions of the vehicle when measured according to the acceleration test procedure.

(8) "Test exhaust system" means an exhaust system in a Selective Enforcement Audit test sample or a production verification system.

(b) [Reserved]

§ 205.166 Noise emission standards.

(a) *Noise emission standards.* (1) Exhaust systems and exhaust system components that are designed and marketed for use on any Federally regulated street motorcycle of the following and subsequent model years must be designed and built so that when installed on any such motorcycle which is in compliance with the requirements of Subpart D of this part, they will not cause that motorcycle to produce noise emissions in excess of the levels indicated:

(i) Systems designed and marketed for use on street motorcycles other than those that meet the definition of § 205.151(a)(2)(ii):

Motorcycle model year	A-weighted noise level (dB)
(A) 1983	83
(B) 1986	80

(ii) Systems designed and marketed for street motorcycles that meet the definition of § 205.151(a)(2)(ii) (moped-type street motorcycles):

Motorcycle model year	A-weighted noise level (dB)
(A) 1983	70

(2) Exhaust systems and exhaust system components that are designed and marketed for use on any Federally regulated off-road motorcycle of the following and subsequent model years must be designed and built so that, at the time of sale, when installed on any such motorcycle which is in compliance with the requirements of Subpart D of this part, they will not cause that motorcycle to produce noise emissions in excess of the levels indicated:

(i) Systems designed and marketed for use on off-road motorcycles with engine displacements of 170 cc and lower:

Motorcycle model year	A-weighted noise level (dB)
(A) 1983	83
(B) 1986	80

(ii) Systems designed and marketed for use on off-road motorcycles with engine displacements greater than 170 cc:

Motorcycle model year	A-weighted noise level (dB)
(A) 1983	86
(B) 1986	82

(3) Exhaust systems and exhaust system components that are designed and marketed for use on any Federally regulated street motorcycle shall be designed and built so that, when installed on any such motorcycle which is in compliance with the requirements of Subpart D of this part, and when both the motorcycle and the exhaust system are properly maintained and used, they will not cause that motorcycle to produce noise emissions in excess of the levels specified in subparagraph (1) of this paragraph, for an Acoustical Assurance Period of one year or a distance of 6000 km (3729 mi) after the time of sale to the ultimate purchaser, whichever occurs first.

(4) Exhaust systems and exhaust system components that are designed and marketed for use on any Federally regulated off-road motorcycle must be designed and built so that, when installed on any such motorcycle which is in compliance with the requirements

of Subpart D of this part, and when both the motorcycle and the exhaust system are properly maintained and used, they will not cause that motorcycle to produce noise emissions in excess of the levels specified in subparagraph (2) of this paragraph, for an Acoustical Assurance Period of one year or a distance of 3000 km (1865 mi) after the time of sale to the ultimate purchaser, whichever occurs first.

(5) At the time of sale to the ultimate purchaser all products must comply with the standards set forth in paragraphs (a)(1) and (2) of this section.

(b) *Measurement procedure.* (1)(i) The standards set forth in paragraph (a) of this section refer to the noise emissions as measured in accordance with the measurement methodology specified in Appendix I-1 for all motorcycles except those street motorcycles meeting the definition of § 205.151(a)(2)(ii). Exhaust systems which alter a motorcycle's maximum rated RPM shall be tested using the unmodified motorcycle's maximum rated RPM to determine closing RPM or test RPM.

(ii) The standards set forth in paragraph (a) of this section for street motorcycles meeting the definition of § 205.151(a)(2)(ii) (moped-type street motorcycles) refer to noise emissions measured in accordance with the measurement methodology specified in Appendix I-2.

(2) Exhaust system components sold as separate products shall be tested as part of a system made up of that part and original equipment components to complete the system.

(3) Exhaust system components sold as separate products which are incompatible with original equipment components necessary to make a complete exhaust system, or which would not meet standards as prescribed in this subpart in such configuration, may be tested with non-original equipment components provided that the provisions of § 205.169(e)(1)(ii)(B) are carried out.

(Sec. 10 of the Noise Control Act (42 U.S.C. 4909))

§ 205.167 Consideration of alternative test procedures.

The Administrator may approve applications from manufacturers of original equipment and replacement exhaust systems for the approval of test procedures which differ from those contained in this subpart so long as the alternative procedures have been demonstrated to correlate with the prescribed procedure. To be acceptable, alternative test procedures must be such that the test results obtained will identify all those test exhaust systems which would not comply with the noise emission standards prescribed in § 205.166 when tested in accordance with the measurement methodology specified in Appendix I. After approval by the Administrator, testing conducted by manufacturers using alternative test procedures may be accepted by the Administrator for all purposes including, but not limited to, production verification testing and selective enforcement audit testing.

§ 205.168 Production verification.

§ 205.168-1 General requirements.

(a) Each manufacturer of motorcycle exhaust systems manufactured for Federally regulated motorcycles and distributed in commerce in the United States which are subject to the noise emission standards prescribed in this subpart and not exempted in accordance with Subpart A, § 205.5:

(1) Must verify each exhaust system in accordance with the production verification procedures described in this subpart;

(2) Must submit a production verification report, as required by § 205.168-3 of this subpart;

(3) Must label each exhaust system in accordance with the requirements of § 205.169 of this subpart; and

(4) Must only manufacture exhaust systems which conform to the applicable noise emission standard established in § 205.166 of this regulation when installed on any Federally regulated motorcycle for which it has been designed and marketed.

(b) The manufacturer who is required to conduct product verification testing to demonstrate compliance with a particular standard must satisfy all other provisions of this subpart applicable to that standard, including, but not limited to, record keeping, reporting, and in-use requirements.

(Sec. 13 of the Noise Control Act (42 U.S.C. 4912))

§ 205.168-2 Production verification procedures.

(a)(1) Prior to distribution into commerce of exhaust systems of a specific category, the manufacturer of the exhaust system shall verify the category in accordance with this subpart.

(2) Notwithstanding paragraph (a)(1) of this section, the manufacturer may distribute in commerce exhaust systems of that category for up to 90 days if weather or other conditions beyond the control of the manufacturer make production verification of a category impossible and if the following conditions are met:

(i) The manufacturer performs the tests required under paragraphs (b) or (c) of this section on such category as soon as conditions permit;

(ii) The manufacturer maintains records of the conditions which make production verification impossible; and,

(iii) If on the 45th day following distribution in commerce of exhaust systems of that category, the manufacturer has not performed the tests required by paragraphs (b) or (c) of this section, the manufacturer within 5 days notifies the Administrator in writing that such exhaust systems have been distributed in commerce and provides to the Administrator documentation of the conditions which have made production verification impossible.

(3) At any time following receipt of notice under paragraph (a)(2)(iii) of this section with respect to a category, the Administrator may require that the manufacturer ship test exhaust systems to an EPA test facility for the required production verification testing.

(b) The production verification requirements for each exhaust system category consist of:

(1) Testing in accordance with § 205.168-8 of an exhaust system selected in accordance with § 205.168-4;

(2) Compliance of the test exhaust system on a motorcycle for which it is marketed with the applicable standard when tested in accordance with Appendix I; and

(3) Submission of a production verification report pursuant to § 205.168-3.

(c) A manufacturer is required to verify all categories of exhaust systems within his product line for each class of Federally regulated motorcycle for which it is designed and marketed. A category of a replacement exhaust system is defined by a separate combination of at least the following parameters:

(1) Muffler/Silencer: (i) Volume; (ii) type of absorption material; (iii) amount of absorption material; (iv) length; (v) diameter; (vi) directional flow of exhaust gas; (vii) interior construction; (viii) shell and inner construction material; (ix) number of header pipes entering muffler; and (x) specific motorcycle application.

(2) Expansion Chamber: (i) Volume; (ii) diameter; (iii) construction material; (iv) directional flow of exhaust gas; (v) length; and (vi) specific motorcycle application.

(3) Spark Arrestors: (i) Volume; (ii) construction material; (iii) directional flow of exhaust gas; (iv) length; (v) diameter; and (vi) specific motorcycle application.

(4) Other Exhaust System Components: (i) Volume; (ii) shape; (iii) length; (iv) diameter; (v) material; (vi) directional flow of exhaust gas; and (vii) specific motorcycle application.

(d) Exhaust system components sold as separate products shall be tested pursuant to § 205.166(b).

(e) Original equipment exhaust systems that are also sold as replacement systems for the same motorcycle configuration need not be tested under this subpart if they have been tested or represented in a test report under Subpart D of this part.

(f) A manufacturer has the following alternatives if any test exhaust system is determined to not be in compliance with applicable standards:

(1) Delete the category from the production verification report. Categories so deleted may be included in a later report under § 205.168–3.

(2) Modify the test exhaust system and demonstrate by testing that it meets applicable standards. All modifications and test results must be reported in the production verification report. The manufacturer must modify all production exhaust systems of the same category in the same manner as the test exhaust system before distribution in commerce.

(g) Upon request by the Director of the Noise and Radiation Enforcement Division, the manufacturer shall notify the Director of any production verification testing scheduled by the manufacturer pursuant to this section so that EPA Enforcement Officers or other employees of the Agency may be present to monitor or conduct the testing in lieu of the manufacturer.

(Sec. 13 of the Noise Control Act (42 U.S.C. 4912))

§ 205.168–3 Production verification report; required data.

(a) Before distribution in commerce of any product to which this regulation applies, the manufacturer must submit a production verification report to the Director, Noise and Radiation Enforcement Division (EN–387), U.S. Environmental Protection Agency, Washington, D.C. 20460.

(b) The report must be signed by an authorized representative of the manufacturer and must include the following:

(1) The name, location, and description of the manufacturer's noise emission test facilities which meet the specifications of Appendix I and are used to conduct testing pursuant to this subpart. A test facility that has been described in a previous submission under this subpart need not be described again but must be identified as such.

(2) A description of all exhaust system categories to be distributed in commerce by the manufacturer (including those exhaust systems not intended for use on Federally-regulated motorcycles), including the part number for each exhaust system category that is designed and marketed for a Federally regulated motorcycle. The manufacturer may satisfy the exhaust system description requirements of this paragraph by submitting as part of the production verification report a copy of his sales literature that describes his product line (by part number) including options, provided, that this literature is supplemented with any additional information necessary to fulfill the requirements of this section.

(3) The following information for each noise emission test conducted:

(i) The individual record for the test vehicles required by § 205.172(a)(2) for all official tests conducted in accordance with § 205.168–8 including, for each invalid test, the reason for invalidation;

(ii) A complete description of any preparation, maintenance, or testing which could affect the noise emissions of test motorcycles, and which was performed on the test motorcycle or the test exhaust system and will not be performed on all other production vehicles or exhaust systems; and

(iii) The reason for replacement, where a substitute exhaust system or replacement motorcycle was necessary, and test results, if any, for substitute exhaust systems and replaced motorcycles.

(4) A complete description of the sound data acquisition system if other than those specified in Appendix I.

(5) For each category subject to the noise emission standards of § 205.166, a sample of the completed label which is required under § 205.169 of this Subpart. The label must contain for each category the information which is required by § 205.169(e)(1).

(6) The following statement and endorsement:

"This report is submitted pursuant to Section 6 and Section 13 of the Noise Control Act of 1972. To the best of (company name) knowledge, all testing for which data are reported here was conducted in strict conformance with applicable regulations under 40 CFR Part 205 *et seq.*, all the data reported here are a true and accurate representation of such testing and all other information reported here is true and accurate. I am aware of the penalties associated with violations of the Noise Control Act of 1972 and the regulations thereunder. (authorized representative)."

(c) Where a manufacturer elects to submit separate production verification reports for portions of his product line as provided in paragraph (a) of this section, information provided in previous reports need not be resubmitted. Information necessary to update or make current previously submitted information must be submitted.

(d) Any change with respect to information reported under this section must be reported as soon as the information becomes available.

(Sec. 13 of the Noise Control Act (42 U.S.C. 4912))

§ 205.168 Test exhaust system selection.

(a) A test exhaust system for which production verification testing is required by § 205.168–2 must be assembled using the manufacturer's normal production processes and intended for distribution in commerce.

(b) For purposes of this section and 205.168–5, prescribed manufacturing and inspection procedures include quality control testing and assembly procedures normally performed by the manufacturer on like products during early protection if the resulting testing is not biased by this procedure.

(Sec. 13 of the Noise Control Act (42 U.S.C. 4909, 4912))

§ 205.168–5 Test exhaust system preparation.

(a) Before the official test, the test exhaust system selected in accordance with § 205.168–4 must not be prepared, tested, modified, adjusted, or maintained in any manner unless such preparation, tests, modifications, adjustments or maintenance (1) are part of the manufacturer's prescribed manufacturing and inspection procedures and are documented in the manufacturer's internal exhaust system assembly and inspection procedures, (2) are required or permitted under this subpart, or (3) are approved in advance by the Administrator.

(b) No quality control, quality assurance testing, assembly or selection procedures may be used on the exhaust system or any portion of it, including parts and subassemblies, unless such quality control, quality assurance testing, assembly or selection procedures (1) are used normally during the production and assembly of all other exhaust systems of the category which will be distributed in commerce, (2) are required or permitted under this subpart,

or (3) are approved in advance by the Administrator.

(Sec. 13 of the Noise Control Act (42 U.S.C. 4912))

§ 205.168-6 Test motorcycle selection.

Test motorcycles to be used for production verification testing of exhaust systems must be of the subject class which has been assembled using the manufacturer's normal production processes, in stock configuration including exhaust system, as sold or offered for sale in commerce.

(Secs. 10, 13 of the Noise Control Act (42 U.S.C. 4909, 4912))

§ 205.168-7 Test motorcycle preparation.

(a) Before the official test, the test motorcycle selected in accordance with § 205.168-6 must not be prepared, tested, modified, adjusted, or maintained in any manner unless such preparation, tests, modifications, adjustments or maintenance are part of the original equipment manufacturer's prescribed manufacturing and inspection procedures, and are documented in the manufacturer's internal motorcycle assembly and inspection procedures, or (2) are required or permitted under this subpart, or (3) are approved in advance by the Administrator.

(b) Equipment or fixtures necessary to conduct the test may be installed on the motorcycle, if such equipment or fixtures shall have no effect on the noise emissions of the motorcycle as determined by the measurement methodology.

(c) In the event of a motorcycle malfunction (i.e., failure to start, etc.) maintenance that is necessary may be performed to enable the vehicle to operate in a normal manner. This maintenance must be documented and reported in the final report prepared and submitted in accordance with this subpart.

(d) No quality control, quality assurance testing, assembly or selection procedures may be used on the test vehicle or any portion thereof, including parts and subassemblies, that will not normally be used during the production and assembly of all other motorcycles of that class which will be distributed in commerce, unless such procedures are required or permitted under this subpart or are approved in advance by the Administrator.

(Sec. 13 of the Noise Control Act (42 U.S.C. 4912))

§ 205.168-8 Testing.

(a) The manufacturer of the exhaust system must conduct one valid test in accordance with the test procedure specified in Appendix I with his exhaust system installed in place of the original equipment exhaust system. Exhaust system components sold as separate products shall be tested as provided in § 205.168-2(d).

(b) In order to be considered a passing exhaust system, the test noise level must not exceed the applicable standard (§ 205.166).

(c) The manufacturer must not perform maintenance on the test motorcycles or test exhaust systems except as provided for by § 205.168-5 and § 205.168-7.

(d) If a motorcycle or test replacement exhaust system is unable to complete the emission test, the motorcycle or exhaust system may be substituted. Any substitute motorcyle or exhaust system must be a production motorcycle or exhaust system of the same model as the motorcycle or exhaust system that was replaced and will be subject to all the provisions of these regulations. Any replacement must be reported in the production verification report including the reason for the replacement.

(e) If an exhaust system category fails to comply with the requirements of this section when tested in accordance with the procedures specified in paragraph (a) of this section, the manufacturer must proceed in accordance with § 205.168-2(f) of this subpart.

(Sec. 13 of the Noise Control Act (42 U.S.C. 4912))

§ 205.168-9 Changes to, addition of, and deviation from an exhaust system category or motorcycle class during the model year.

(a) Any change to an exhaust system category or motorcycle class (see § 205.168-2 and § 205.151) with respect to any of the parameters stated in those respective sections, constitutes the addition of a new and separate category or motorcycle class to the manufacturer's product line.

(b) When a manufacturer introduces a new category or motorcycle class to his product line, he must proceed in accordance with § 205.168-2.

(Sec. 13 of the Noise Control Act (42 U.S.C. 4912))

§ 205.168-10 Production verification based on data from previous model years.

(a)(1) Production verification of each category will not be required for subsequent model years when the manufacturer's initial production verification noise emission level is at least 2 dB below the noise emission standard in effect for that model year, when the manufacturer has not changed the noise control components or elements of design used on that category which would cause the noise emission level to increase, and when the new model motorcycle has not been changed with respect to its noise control elements such that its noise level increases.

(2) Production verification of each category will be required for those model years when the more stringent noise emission standards become effective.

(b) For those configurations whose initial PV noise emission level is less than 2 dB below the standard in effect, production verification will be required when production of that configuration commences each model year, except as provided in paragraph (c) of this section or unless the Administrator, upon request by the manufacturer, permits the use of production verification data for specific configurations from previous production verification reports. Considerations relevant to the Administrator's decision to permit production verification carry-over on these configurations may include, but are not limited to:

(1) The level of the standard in effect for the year in question;

(2) Performance based on production verification data for previous years;

(3) Performance based on data obtained from selective enforcement testing during previous years;

(4) The number and type of changes in the design of noise control features incorporated in the new model motorcycles that could effect the noise emission level;

(5) The number and type of changes in the design of noise attenuation systems incorporated in the new model exhaust systems; and

(6) Any other noise emission test data which the manufacturer may care to submit.

(c) In succeeding years a manufacturer does not have to conduct production verification tests on exhaust systems which he continues to manufacture for regulated motorcycles of a previous model year and for which he has already conducted a PV test. If a manufacturer makes a change in the design of an exhaust system which reduces its attenuation and which has been verified for a previous model year, he must conduct a production verification test with respect to the earlier model year motorcycles.

(Sec. 13 of the Noise Control Act (42 U.S.C. 4912))

§ 206.168-11 Order to cease distribution.

(a) If a category of exhaust systems is found not to comply with this subpart because it has not been verified or labeled, as required by § 205.168-2 and § 205.169, the Administrator may issue

an order to the manufacturer to cease distribution in commerce exhaust systems of that category. This order will not be issued if the manufacturer has made a good faith attempt to properly production verify the category and can establish such good faith.

(b) Any such order shall be issued after notice and opportunity for a hearing which will be held in accordance with title 5 U.S.C. 554.

(Sec. 11 of the Noise Control Act (42 U.S.C. 4910))

§ 205.169 Labeling requirements.

(a) The manufacturer of any product (including the manufacturer of newly produced motorcycles) subject to production verification requirements of this subpart must, at the time of manufacture, affix a permanent, legible label, or mark of the type and in the manner described below, containing the information provided below, to all such exhaust systems or exhaust system components to be distributed in commerce.

(b) The labels or marks shall be affixed in such a manner that they cannot be removed without destroying or defacing them, and must not be applied to any part which is easily detached from such product.

(c) The label or mark shall be in a readily visible position when the exhaust system or exhaust system component is installed on all motorcycles for which it is designed and marketed.

(d) All required language shall be lettered in the English language in block letters and numerals in a color that contrasts with its background.

(e) The label or mark must contain the following information:

(1) For exhaust systems subject to the noise emission standards of § 205.166:

(i) The label heading: Motorcycle Exhaust System Noise Emission Control Information;

(ii)(A) For original equipment and replacement exhaust system, the following statement:

This (manufacturer's name) exhaust system (serial number) meets EPA noise emission requirements of (noise emission standard) dBA for the following motorcycles: (list of model specific codes). Installation of this exhaust system on motorcycle models not spedcified may violate Federal law.

(B) For exhaust system components designed and marketed for motorcycles, and tested in accordance with § 205.168 as a constituent of a complete exhaust system comprising non-original equipment components (other than itself), as provided for in § 205.166(b)(3), the following statement:

This (manufacturer's name) (type of component) (serial number), when installed with a legal (type of component), meets EPA noise emission requirements of (noise emission standard) dBA for the following motorcycles: (list of model specific codes). Installation of this exhaust system components on motorcycle models not specified may violate Federal law.

(iii) The model specific code must be the same as used by the motorcycle manufacturer and described in § 205.158(a)(6).

(2) For exhaust systems designed solely for use on competition motorcycles (as defined by § 205.151(a)(3) and so designated and labeled by the manufacturer), the statement:

This product is designed for use on closed course competition motorcycles only and does not conform to U.S. EPA noise emission standards. Used on motorcycles subject to EPA noise regulations constitutes tampering and is a violation of Federal law unless it can be shown that such use does not cause the motorcycle to exceed applicable Federal standards.

(3) For exhaust systems designed solely for use on motorcyles manufactured before January 1, 1982, the statement:

This product is designed for use on pre-1982 model year motorcycles only and does not conform to U.S. EPA noise emission standards. Use on motorcycles subject to EPA noise regulations constitutes tampering and is a violation of Federal law unless it can be shown that such use does not cause the motorcycle to exceed applicable Federal standards.

(4) For replacement exhaust systems manufactured in the United States solely for use outside the U.S. and not conforming to the noise emissions standards of this regulation, the statement: "For Export Only."

(f) The manufacturer must maintain and provide to the Administrator upon request, such records which enable the Administrator to ascertain the month of manufacture.

(Secs. 10 and 13 of the Noise Control Act (42 U.S.C. 4909 and 4912))

§ 205.170 Testing by the Administrator.

(a)(1) In order for the Administrator to determine whether such exhaust systems or a manufacturer's test facility conform to applicable regulations, the Administrator may require that exhaust systems to be tested pursuant to the Act be submitted to him, at such place and time as he reasonably designates. He may designate the quantity of exhaust systems and the duration of time he reasonably requires for the purpose of conducting tests in accordance with test procedures described in Appendix I. The manner in which the Administrator conducts such tests, the EPA test facility, and the test procedures employed will be based upon good engineering practice and meet or exceed the requirements of Appendix I.

(2) If the Administrator specifies that he will conduct such testing at the manufacturer's facility, the manufacturer shall make available instrumentation and equipment of the type required for test operators by these regulations. The Administrator may conduct such tests with his own equipment, having specifications equal to or exceeding the performance specifications of the instrumentation and equipment required in these regulations.

(3) The manufacturer may observe tests conducted by the Administrator pursuant to this section on exhaust systems produced by the manufacturer and may copy the data accumulated from such tests. The manufacturer may inspect any of the exhaust systems before and after testing by the Administrator.

(b)(1) If, based on tests conducted by the Administrator or on other relevant information, the Administrator determines that the test facility does not meet the requirements of Appendix I or the requirements for an alternative test procedure approved under § 205.154, the Administrator will give notice to the manufacturer in writing of his determination and the reasons underlying it.

(2) The manufacturer may, at any time within 15 days after receipt of a notice issued under paragraph (b)(1) of this section, request a hearing conducted in accordance with 5 U.S.C. 554 on the issue of whether his test facility met the requirements. Such notice will not take effect until 15 days after its receipt by the manufacturer, or, if a hearing is requested under this paragraph, until adjudication by the administrative law judge.

(3) After any notice issued under paragraph (b)(1) of this section has taken effect, no data thereafter derived from that test facility will be acceptable for purposes of this subpart.

(4) The manufacturer may request in writing that the Administrator reconsider his determination under paragraph (b)(1) of this section based on data or information which indicates that changes have been made to the test facility and that such changes have resolved the reasons for disqualification.

(5) Within 10 working days after receipt of the manufacturer's request for reconsideration pursuant to paragraph (b)(4) of this section, the Administrator will notify the manufacturer of his

determination and the reasons underlying it with regard to the requalification of the test facility.

(c) The Administrator will assume all reasonable costs associated with shipment of exhaust systems to the place designated pursuant to paragraph (a) of this section with respect to:

(1) Any production verification testing performed at a place other than the manufacturer's facility as provided in § 205.168-2(a)(3), or as a result of the manufacturer's not owning or having access to a test facility:

(2) Testing of a reasonable number of exhaust systems (i) for purposes of selective enforcement auditing under § 205.171, or (ii) if the manufacturer has failed to establish that there is a correlation between its test facility and the EPA test facility, or (iii) the Administrator has reason to believe, and provides the manufacturer with a statement of such reason, that the exhaust systems to be tested would fail to meet the standard prescribed in this subpart if tested at the EPA test facility, even though they would meet such standard if tested at the manufacturer's test facility;

(3) Any testing performed during a period when a notice of nonconformance of the manufacturer's test facility issued pursuant to paragraph (b) of this section is in effect;

(4) Any testing performed at a place other than the manufacturer's facility as a result of the manufacturer's failure to permit the Administrator to conduct or monitor testing as required by this subpart; and

(5) In addition to any exhaust systems included in paragraph (c) (1), (2), (3), or (4) of this section, testing of up to 10 percent of the manufacturer's production verification test exhaust systems for a model year if the Administrator determines testing these exhaust systems at the EPA test site is necessary to assure that a manufacturer has acted or is acting in compliance with the Act.

(Secs. 11 and 13 of the Noise Control Act (42 U.S.C. 4910, 4912))

§ 205.171 Selective enforcement auditing (SEA) requirements.

§ 205.171-1 Test Request.

(a) The Administrator will request all testing under § 205.171 by means of a test request addressed to the manufacturer.

(b) The test request will be signed by the Assistant Administrator for Enforcement or his designee. The test request will be delivered to the plant manager or other responsible official as designated by the manufacturer.

(c) The test request will specify the exhaust system category, model and model year of motorcycle selected for testing, the manufacturer's plant or storage facility from which the exhaust systems must be selected, the method of selection and the time at which the exhaust systems must be selected. The test request will also provide for situations in which the selected exhaust system is unavailable for testing. The test request may include an alternative exhaust system category designated for testing in the event that exhaust systems of the first specified category are not available for testing because the exhaust systems are not being manufactured at the specified plant or are not being manufactured during the specified time or are not being stored at the specified plant or storage facility.

(d)(1) If the manufacturer projects a yearly production of fewer than 50 exhaust systems of the specified category to be tested, then, within five (5) days of receipt of the request, the manufacturer must notify the Administrator of such low volume production. The Administrator will then provide a revised test request specifying a testing plan which imposes no greater risk of failure (5%) at the acceptable quality level (10%) than the plan in Appendix II. Upon receipt of the revised test request, the manufacturer must select and test a sample of exhaust systems from the category specified in the test request in accordance with this subpart and the conditions specified in the test request.

(2) If the manufacturer produces 50 or more of the specified category, then, upon receipt of the test request, the manufacturer must select and test a sample of exhaust systems for the category specified in the test request in accordance with this subpart and the conditions specified in the test request.

(e)(1) Any testing conducted by the manufacturer under a test request must be initiated within the time period specified in the test request; except that initiation may be delayed for increments of 24 hours or one business day where ambient test site weather conditions, or other conditions beyond the control of the manufacturer, in that 24-hour period do not permit testing. The manufacturer must record the conditions for this period.

(2) The manufacturer must complete noise emission testing on a minimum of ten exhaust systems per day unless otherwise provided by the Administrator or unless ambient test site conditions permit only the testing of a lesser number, in which event the ambient test site weather conditions for that period must be recorded.

(3) The manufacturer is allowed 24 hours to ship exhaust systems from a sample from the assembly plant to the testing facility if the facility is not located at the plant or in close proximity to the plant. The Administrator may approve more time based upon a request by the manufacturer accompanied by a satisfactory justification.

(f) The Administrator may issue an order to the manufacturer to cease distribution in commerce of exhaust systems of a specified category being manufactured at a particular facility if:

(1) The manufacturer refuses to comply with the provisions of a test request issued by the Administrator under this section; or

(2) The manufacturer refuses to comply with any of the requirements of this section.

(g) A cease distribution order will not be issued under paragraph (f) of this section if the manufacturer's refusal is caused by conditions and circumstances outside his control which render compliance with the provisions of a test request or with any other requirements of this section impossible. Conditions and circumstances outside the control of the manufacturer include, but are not limited to, the temporary unavailability of equipment and personnel needed to conduct the required tests, caused by uncontrollable factors such as equipment breakdown or failure or illness of personnel. Failure of the manufacturer to adequately plan for and provide the equipment and personnel needed to conduct the tests does not constitute uncontrollable factors. The manufacturer must bear the burden of establishing the presence of the conditions and circumstances required by this paragraph.

(h) Any order to cease distribution will be issued only after notice and opportunity for a hearing in accordance with 5 U.S.C. 554.

(Secs. 11, 13 of the Noise Control Act (42 U.S.C. 4910 and 4912))

§ 205.171-2 Test exhaust system sample selection.

(a) Exhaust systems comprising the sample which are required to be tested under a test request in accordance with this subpart must be selected consecutively as they are produced. The provisions of § 205.168-7 (d) and (e) also pertain to this section.

(b) The Acceptable Quality Level (AQL) is 10 percent. The appropriate sampling plans associated with the designated AQL are contained in Appendix II or the test request.

(c) The exhaust systems of the category selected for testing must be assembled by the manufacturer for

distribution in commerce using the manufacturer's normal production process.

(d) Unless otherwise indicated in the test request, the manufacturer must initiate testing with the exhaust systems of the category specified in the test request which are next scheduled for production after receipt of the test request.

(e) The manufacturer must keep on hand all products in the test sample, until the sample is accepted or rejected in accordance with § 205.171–8; except that exhaust systems actually tested and found to be in conformance with this regulation need not be kept.

(Sec. 13 of the Noise Control Act (42 U.S.C. 4912))

§ 205.171–3 Test motorcycle sample selection.

A test motorcycle to be used for selective enforcement audit testing of exhaust systems must be a motorcycle of the subject class which has been assembled using the manufacturer's normal production process, in stock configuration including exhaust system, and sold or offered for sale in commerce.

(Sec. 13 of the Noise Control Act (42 U.S.C. 4912))

§ 205.171–4 Test exhaust system preparation.

Prior to the official test, each test exhaust system selected in accordance with § 205.171–2 must be prepared in accordance with § 205.168–6.

(Sec. 13 of the Noise Control Act (42 U.S.C. 4912))

§ 205.171–5 Test motorcycle preparation.

Prior to the official test, each motorcycle selected in accordance with § 205.171–3 must be prepared in accordance with § 205.168–7.

(Sec. 13 of the Noise Control Act (42 U.S.C. 4912))

§ 205.171–6 Testing procedures.

(a) The manufacturer of the exhaust system must conduct one valid test in accordance with the appropriate test procedure specified in Appendix I for each exhaust system selected for testing under this subpart.

(b) No maintenance may be performed on test exhaust systems except as provided by § 205.171–4. In the event an exhaust system is unable to complete the noise emission test, the manufacturer may replace the exhaust system. Any replacement exhaust system must be a production exhaust system of the same category as the exhaust system which it replaced, and it is subject to all the provisions of this subpart.

(Sec. 13 of the Noise Control Act (42 U.S.C. 4912))

§ 205.171–7 Reporting of the test results.

(a)(1) The manufacturer must submit a copy of the test report for all testing conducted pursuant to § 205.171 at the conclusion of each 24-hour period during which testing is done.

(2) For each test conducted, the manufacturer must provide the following information:

(i) Category identification where applicable;

(ii) Year, manufacturing date, serial number and model of exhaust system;

(iii) Year, make serial number, and model of test motorcycle; and

(iv) Test results by serial numbers.

(b) In the case where an EPA Enforcement Officer is present during testing required by this subpart, the written reports requested in paragraph (a) of this section may be given directly to the Enforcement Officer.

(c) Within 5 days after completion of an SEA, the manufacturer must submit to the Administrator a final report which will include the following:

(1) The name, location, and description of the manufacturer's noise emission test facilities which meet the specifications of Appendix I and where utilized to conduct testing reported under this section, except, that a test facility that has been described in a previous submission under this subpart need not again be described, but must be identified as that facility.

(2) The following information for each noise emission test conducted:

(i) The individual records required by § 205.172 (a)(2) for all noise emission tests including for each invalid test, the reason for invalidation;

(ii) A complete description of any modification, repair, preparation, maintenance, or testing, which could affect the noise emissions of the product and which was performed on the test exhaust system but not performed on all other production exhaust systems;

(iii) The test results for any replacement exhaust system and the reason for its replacement.

(3) A complete description of the sound data acquisition system if other than that specified in Appendix I.

(4) The following statement and endorsement:

This report is submitted pursuant to Section 6 and Section 13 of the Noise Control Act of 1972. To the best of [company name] knowledge, all testing for which data is reported here was conducted in strict conformance with applicable regulations under 40 CFR Parts 205 *et seq.*, all the data reported here are a true and accurate representation of such testing, and all other information reported here is true and accurate. I am aware of the penalties associated with violations of the Noise Control Act of 1972 and the regulations thereunder. (authorized representative).

(5) Additional information required by the test request.

(d) Information required to be submitted to the Administrator under this section must be sent to the following address: Director, Noise and Radiation Enforcement Division, (EN–387), U.S. Environmental Protection Agency, Washington, D.C. 20460.

(Sec. 13 of the Noise Control Act (42 U.S.C. 4912))

§ 205.171–8 Passing or failing under SEA.

(a) A failing exhaust system is one which, when installed on any motorcycle which is in compliance with the requirements of subpart D and for which it is designed an marketed, together with such motorcycle produces a measured noise level in excess of the applicable noise emission standard in § 205.166.

(b) The number of failing vehicles in a sample determines whether the sample passes or fails (See applicable tables in Appendix II). If the number of failing vehicles is greater than or equal to the number in Column B, the sample fails. If the number of failing vehicles is less than or equal to the number in Column A, the sample passes.

(c) Pass or failure of a SEA takes place when a decision that an exhaust system is a passing or failing unit is made on the last exhaust system required to make a decision under paragraph (b) of this section.

(d) If the manufacturer passes the SEA, he will not be required to perform any additional testing on subsequent exhaust systems to satisfy the test request.

(e) The Administrator may terminate testing earlier than required in paragraph (b), based on a request by the manufacturer, accompanied by voluntarily ceasing distribution in commerce of exhaust systems from the category in question, manufactured at the plant which produced the exhaust systems being tested. Before reinitiating distribution in commerce of that exhaust system category from that plant, the manufacturer must take the action described in § 205.171–10(a)(1) and (2).

(Sec. 13 of the Noise Control Act (42 U.S.C. 4912))

§ 205.171–9. Continued testing.

(a) If an SEA failure occurs according to paragraph (b) of § 205.171–8, the Administrator may require that any or

all exhaust systems of that category produced at that plant be tested before distribution in commerce.

(b) The Administrator will notify the manufacturer in writing of his intent to require continued testing of exhaust systems under paragraph (a) of this section.

(c) The manufacturer may request a hearing on the issues of whether the SEA was conducted properly; whether the criteria for SEA failure have been met; and the appropriateness or scope of a continued testing order. If a hearing is requested, the hearing will begin no later than 15 days after the date on which the Administrator received the hearing request. Neither the request for a hearing nor the fact that a hearing is in progress will affect the responsibility of the manufacturer to commence and continue testing required by the Administrator pursuant to paragraph (a) of this section.

(d) Any tested exhaust system which demonstrates conformance with the applicable standard may be distributed into commerce.

(e) Any distribution into commerce of an exhaust system which does not comply with the applicable standard is a prohibited act.

(Secs. 10 and 13 of the Noise Control Act (42 U.S.C. 4909 and 4912))

§ 205.171-10. Prohibition on distribution in commerce; manufacturer's remedy.

(a) The Administrator will permit the manufacturer to cease testing under § 205.171-9 after the manufacturer has taken the following actions:

(1) Submission of a written report to the Administrator which identifies the reason for the noncompliance of the exhaust systems, describes the problem and describes the proposed quality control or quality assurance remedies to be taken by the manufacturer to correct the problem, or establishes that the requirements for an engineering change pursuant to § 205.168-9 have been completed, and

(2) Demonstration that the specified exhaust system category has passed a retest conducted in accordance with § 205.171 and the conditions specified in the test request.

(b) The manufacturer may begin testing under paragraph (a)(2) of this section upon submitting the report, required by paragraph (a)(1) of this section any may cease continued testing upon making the demonstration required by paragraph (a)(2) of this section. The Administrator may require resumption of continued testing if he determines that the manufacturer has not satisfied the requirements of paragraphs (a)(1) and (2) of this section.

(c) Any exhaust system failing the noise emission tests conducted pursuant to Appendix I may not be distributed into commerce until necessary adjustment or repairs have been made and the exhaust system passes a retest.

(Secs. 11 and 13 of the Noise Control Act (42 U.S.C. 4910, 4912))

§ 205.172 Maintenance of records; submittal of information.

(a) Except as otherwise provided in regulation, the manufacturer of any new exhaust system subject to any of the standards or procedures prescribed in this subpart must establish, maintain and retain the following adequately organized and indexed records:

(1) General records:

(i) Identification and description by category parameters of all exhaust systems in the manufacturer's product line;

(ii) A description of any procedures other than those contained in this subpart used to perform noise emission tests on any test exhaust system;

(iii) A record of the calibration of the acoustical instrumentation as is described in Appendix I;

(iv) A record of the date of manufacture of each exhaust system subject to this subpart, keyed to the serial number.

(2) Individual records for test exhaust systems:

(i) A complete record of all noise emission tests performed for Production Verification and Selective Enforcement Audit (except tests performed by EPA directly), including all individual worksheets and other documentation or exact copies relating to each test;

(ii) A record of the information recorded as described in Appendix I; and

(iii) A record and description of all repairs, maintenance and other servicing which were performed before successful testing of the exhaust system pursuant to these regulations and which could affect the noise emission of the exhaust system, giving the date and time of the maintenance or service, the reason for it, the person authorizing it, and the names of supervisory personnel responsible for the conduct of the maintenance or service.

(3) A properly filed production verification report following the format prescribed by the Administrator in § 205.168-3 fulfills the requirements of paragraphs (a)(1)(i) and (ii) of this section.

(4) All records required to be maintained under this subpart must be retained by the manufacturer for a period of three (3) years from the production verification date. Records may be retained as hard copy or alternatively reduced to microfilm, punch cards, etc., depending on the record retention procedures of the manufacturer; however, when an alternative method is used, all information contained in the hard copy must be contained in the copy made by the alternative method.

(b) The manufacturer must, upon request, submit to the Administrator the following information with regard to new exhaust system production:

(1) Number of exhaust systems, by category, scheduled for production for the time period designated in the request.

(2) Number of exhaust systems, by category, produced during the time period designated in the request.

(c) The reporting requirements of this regulation will no longer be effective after five (5) years from the last effective date of this regulation. However, the requirements will remain in effect if the Administrator is taking appropriate steps to repromulgate or modify the reporting requirements at that time.

(Sec. 13 of the Noise Control Act (42 U.S.C. 4912))

§ 205.173 In-use requirements.

§ 205.173-1 Warranty.

(a) The exhaust system manufacturer who is required to production verify under this subpart must include in the information supplied to the ultimate purchaser pursuant to section 205.173-4, the following statement:

Noise Emission Warranty

[The manufacturer] warrants that this exhaust system, at time of sale, meets all applicable U.S.E.P.A. Federal noise standards. This warranty extends to the first person who buys this exhaust system for purposes other than resale, and to all subsequent buyers. Warranty claims should be directed to ————. (Manufacturer shall fill in this blank with his name, address and telephone number.)

(b) The manufacturer must submit to the Administrator a copy of all information of a general nature provided to dealers and other agents on the administration or coverage of the noise emission warranty. Such information must be submitted not later than ten (10) days after distribution.

(c) All information must be sent to:

Director, Noise and Radiation Enforcement Division (EN-387), Environmental Protection Agency, Washington, D.C. 20460.

(Sec. 13 of the Noise Control Act (42 U.S.C. 4912))

§ 206.173-2 Tampering.

The manufacturer who conducts production verification of a category

must include the following statement pursuant to § 205.173–4 with each product of that category the manufacturer distributes into commerce:

Tampering Prohibition

Federal law prohibits any modification to this exhaust system which causes the motorcycle to exceed the Federal noise standard. Use of the motorcycle with such a modified exhaust system is also prohibited.

Acts likely to constitute tampering include removal or puncturing the muffler, baffles, header pipes, or any other component which conducts exahust gases.

(Secs. 10, 13 of the Noise Control Act (42 U.S.C. 4909, 4912))

§ 205.173–3 Warning statement.

The manufacturer who conducts production verification on a category, must include the following statement pursuant to § 205.173–4 with each product of that category the manufacturer distributes into commerce:

Warning: This product should be checked for repair or replacement if the motorcycle noise has increased significantly through use. Otherwise, the owner may become subject to penalties under state and local ordinances.

(Sec. 13 of the Noise Control Act (42 U.S.C. 4912))

§ 205.173–4 Information sheet.

The manufacturer must include the Noise Emissions Warranty statement, Tampering Prohibition statement and the Warning statement with each product. All three statements must be printed on a white sheet or card at least 8½"×11". Each statement must cover no more than ⅓ of the sheet or card. No other printing must be on the sheet. The statements must be printed in black ink; the statement headings must be in capital letters in a minimum size type of 12 point (pica type) or its equal; and the test of the statement must be a minimum size type of 10 point (elite type) or its equal. The sheet or card must be placed with the exhaust system inside any packaging. If there is no packaging, the sheet or card must be affixed to the exhaust system so that it will not be accidentally detached in shipping.

(Sec. 13 of the Noise Control Act (42 U.S.C. 4912))

§ 205.173–5 Retention of durability records.

(a) Each manufacturer responsible for compliance with the standards specified in § 205.166 must establish and maintain records for each exhaust system category containing the information upon which the manufacturer relied in determining that the products will meet the standards for the acoustical assurance period..

The records may include, but need not be limited to, the following:

(1) Durability data and actual noise testing on critical noise attenuating components.

(2) Noise level deterioration curves on the exhaust system.

(3) Data from products in actual use.

(4) Engineering judgment.

(b) [Reserved]

(Sec. 13 of the Noise Control Act (42 U.S.C. 4912))

§ 205.174 Remedial orders.

The Administrator may issue appropriate remedial orders to a manufacturer if products are distributed into commerce not in compliance with the regulations of this subpart. Potential orders are stop sale orders, orders to cease distribution, relabel, replace or recall, or any other orders appropriate in the specific circumstances. A remedial order will be issued only after notice and opportunity for a hearing in accordance with 5 U.S.C. 554.

(Sec. 11 of the Noise Control Act (42 U.S.C. 4910))

Appendix I to Subparts D and E—Motorcycle Noise Emission Test Procedures Appendix I–1 to Subparts D and E—Test Procedure for Street and Off-road Motorcycles

(a) *Instrumentation.*

Proper usage of all test instrumentation is essential to obtain valid measurements. Operating manuals or other literature furnished by the instrument manufacturer must be referred to for both recommended operation of the instrument and precautions to be observed. The following instrumentation must be used, where applicable:

(1) A sound level measurement system which meets the type S1A requirements of American National Standard Specification for Sound Level Meters, ANSI S1.4–1971. As an alternative to making direct measurements using a sound level meter, a microphone or sound level meter may be used with a magnetic tape recorder and/or a graphic level recorder or indicating instrument provided that the system meets the performance requirements of ANSI S1.4–1971. The sound level measurement system must be calibrated at least annually to insure that the system meets the performance requirements of ANSI S1.4–1971.

(2) An acoustic calibrator with an accuracy of within ±0.5 dB. The calibrator must be checked annually to verify that its output is within the specified accuracy.

(3) (i) An engine speed measurement system having the following characteristics:

(A) Steady-state accuracy of within ±3% of actual engine speed in the range of 45% to 100% of the engine speed (RPM) where peak net brake power (maximum rated RPM) is developed; and

(B) Response characteristics such that, when closing RPM is indicated under an acceleration as described below, actual engine speed is no more than 3 percent (of closing RPM) greater than the specified closing RPM.

(ii) The vehicle tachometer may be used to ascertain:

(A) The approach RPM provided its meets the specifications in subparagraph (a)(3)(i)(A).

(B) The closing RPM provided it meets the specifications in subparagraphs (a)(3)(i)(A) and (B).

(iii) Indirect engine speed measurement systems, such as systems which determine engine speed from vehicle speed measurement, may be used provided the specifications of paragraph (a)(1)(i) are met.

(4) An anemometer with steady-state accuracy of within ±10% at 20 km/h (12.4 mph).

(5) A microphone wind screen which does not affect microphone response more than ±0.5 dB for frequencies of 20–4000 Hz or ±1.0 dB for frequencies of 4000–10,000 Hz, taking into account the orientation of the microphone.

(b) *Test site.*

(1) The measurement area within the test site must meet the following requirements and be laid out as described:

(i) The following points must be established:

(A) Microphone target point—a reference point on the vehicle path;

(B) End point— a point on the vehicle path 7.5 ± 0.3m (24.6 ± 1.0 ft) beyond the microphone target point, and

(C) Microphone location point—a point 15± 0.3m (49.2 ± 1.0 ft) from the microphone target point on a normal to the vehicle path through the microphone target point.

(ii) The microphone must be:

(A) Positioned at the microphone location point 1.2 ± 0.1 m (3.9 ± 0.3 ft) above the ground plane; and

(B) Oriented in a plane perpendicular to the vehicle path, and at an angle for which the microphone was calibrated to have the flatest response characteristics over the frequency range of 100 Hz to 10,000 Hz when measured with respect to the motorcycle source.

(iii) the surface of the ground within at least the triangular area formed by the microphone location and the points 15 ± 0.3m (49.2 ±1.0 ft.) prior to and 15 ± 0.3 m (49.2 ± 1.0 ft.) beyond the microphone target point must be flat (+ 5 cm (2.0 in)) and level (grade not more than 0.5% along vehicle path), have a concrete or sealed asphalt surface, and be free from snow, soil or other extraneous material.

(iv) The vehicle path must be relatively smooth and of sufficient length for safe acceleration, deceleration and stopping of the motorcycle.

(2) The test site must be flat, open space free of large sound-reflecting surfaces (other than the ground), such as parked vehicles, sign-boards, buildings or hillsides located within a 30 ± 0.3 m (98.4 ± 1.0 ft) radius of the microphone location and the following points on the vehicle path (see Figure 1):

(i) The microphone location point;

(ii) A point 15 ± 0.3 m (49.2 ± 1.0 ft.) before the microphone target point; and

(iii) A point 15 ± 0.3 m (49.2 ± 1.0 ft) beyond the microphone target point.

(c) *Measurement procedure.*

(1) To establish the acceleration point, the end point must be approached in second gear

from the reverse of the intended test direction at a constant engine speed of 50% of maximum rated RPM or closing RPM less ten percent of (of maximum rated RPM), whichever is lower, (±2.5% of observed reading). When the front of the motorcycle reaches the end point (approached from the reverse direction), the throttle must be smoothly and fully opened to accelerate the motorcycle past the microphone target point under wide open throttle. When the motorcycle reaches closing RPM the throttle must be smoothly and fully closed. An ignition disable device may be used to turn off the engine at closing RPM in lieu of closing the throttle manually. The location of the front of the motorcycle at the time of throttle closure is the acceleration point for the test runs. The test runs must be made in the opposite direction. A sufficient number of trial runs must be made to assure accurate establishment of the acceleration point.

(2) Closing RPM must be determined according to the motorcycle engine displacement, as follows (see Figure 2):

Displacement (cc)	Closing RPM (Fraction of Maximum Rated RPM—Percent)
0–175	95
176–675	109–0.08×(engine displacement in cc)
676 and above	55

(3) The distance from the acceleration point to the end point must be at least 10 m (32.8 ft). If this distance is less than 10 m (32.8 ft) by the procedure specified in paragraph (c)(1), above, third gear, if the motorcycle is so equipped, must be used. If the distance is still less than 10 m (32.8 ft), fourth gear, if the motorcycle is so equipped, must be used, and so on. If closing RPM is reached before the vehicle travels 10 m (32.8 ft), with the vehicle in its highest gear, the throttle must be opened less rapidly, but in such a manner that full throttle and closing RPM are attained at the end point.

(4) If the motorcycle is equipped with an automatic transmission, the procedure specified in paragraph (c)(1), above, must be followed except that the lowest selectable range must be employed, and the procedure specified in paragraph (c)(3) must be followed using the next selectable higher range, if necessary, and if the vehicle is so equipped. If closing RPM is reached before the vehicle travels 10 m (32.8 ft.), the throttle must be opened less rapidly, but in such a manner that full throttle and closing RPM are attained at the end point.

(5) Throttle opening must be controlled to avoid excessive wheel slip or lift-off.

(6) To conduct a sound measurement, the motorcycle must proceed along the vehicle path in the forward direction in second gear (or higher gear as applicable under paragraph (c)(3)) at a constant engine speed of 50% of maximum rated RPM or at closing RPM less ten percent (of maximum rated RPM), whichever is lower (± 2.5 percent of observed reading). When the front of the vehicle reaches the acceleration point, the throttle must be smoothly and fully opened. Full acceleration must continue until closing RPM is reached, which must occur within ± 1.0 m (3.3 ft.) of the end point, and at which time the throttle must be smoothly and fully closed. An ignition disable device may be used to turn off the engine at closing RPM in lieu of closing the throttle manually.

(7) A sufficient number of preliminary runs must be conducted before the testing to familiarize the rider with the test procedure and operating conditions of the vehicle. The engine temperature must be within the normal operating range prior to each run.

(d) *Measurements.*

(1) The sound level meter must be set for fast response and for the A-weighting network. The microphone wind screen must be used. The sound level meter must be calibrated with the acoustic calibrator as often as is necessary throughout testing to maintain the accuracy of the measurement system.

(2) The sound level meter must be observed throughout the acceleration period. The highest sound level obtained for the run must be recorded.

(3) Measurements must be made until at least four readings from each side are within 2 dB of each other. The noise level for each side is the average of the four which are within 2 dB of each other. The noise level reported must be for that side of the motorcycle having the highest noise level.

(4) While making sound level measurements, not more than one person other than the rider and the observer reading the meter may be within 15 m (49.2 ft) of the vehicle or microphone, and that person must be directly behind the observer reading the meter, on a line through the microphone and the observer.

(5) The ambient noise level (including wind effects) at the test site due to sources other than the motorcycle being measured must be at least 10 dB lower than the noise level at the microphone location produced by the motorcycle under test.

(6) Wind speed at the test site during tests must be less than 20 km/h (12.4 mph).

(e) *Required data.* For each valid test, the following data must be recorded:

(1) Motorcycle type, serial number, model year, and date of manufacture.

(2) Names of persons conducting test.

(3) Test location.

(4) Wind speed and ambient noise level measured on the same day as the test and representative of conditions during the test.

(5) Motorcycle engine displacment, maximum rated RPM, and closing RPM.

(6) The gear used for testing if other than second gear; or type of transmission and description of testing if motorcycle is equipped with automatic transmission.

(7) Description of the sound level meter including type, serial number, and calibration date.

(8) Description of the external acoustic calibrator including type, serial number, and calibration date.

(9) Description of the tachometer or engine speed measurement system used for conducting the test.

(10) Maximum noise level for each pass on each side of the motorcycle including invalid readings and reasons for invalidation.

(11) Reported noise level.

(12) Other information as appropriate to completely describe testing conditions and procedure.

Appendix I-2 to Subparts D and E—Test Procedure for Street Motorcycles That Meet the Definition of § 205.151(a)(2)(ii) (Moped-type Street Motorcycles).

(a) *Instrumentation.* Proper usage of all test instrumentation is essential to obtain valid measurements. Operating manuals or other literature furnished by the instrument manufacturer must be referred to for both recommended operation of the instrument and precautions to be observed. The following instrumentation must be used, where applicable:

(1) A sound level measurement system which meets the type SIA requirements of American National Standard Specification for Sound Level Meters, ANSI S1.4–1971. As an alternative to making direct measurements using a sound level meter, a microphone or sound level meter may be used with a magnetic tape recorder and/or a graphic level recorder or indicating instrument provided that the system meets the performance requirements of ANSI S1.4–1971. The sound level measurement system must be calibrated at least annually to insure that the system meets the performance requirements of ANSI S1.4–1971.

(2) An acoustic calibrator with an accuracy of within ±0.5 dB. The calibrator must be checked annually to verify that its output is within the specified accuracy.

(3) An anemometer with steady-state accuracy of within ±10% at 20 km/h (12.4 mph).

(4) A microphone wind screen which does not affect microphone response more than ±0.5 dB for frequencies of 20–4000 Hz or ±1.0 dB for frequencies of 4000–10,000 Hz, taking into account the orientation of the microphone.

(b) *Test site.* (1) The measurement area within the test site must meet the following requirements and be laid out as described:

(i) The following points must be established:

(A) Microphone target point—a reference point on the vehicle path;

(B) End point—a point on the vehicle path 7.5±0.3 m (24.6±1.0 ft) beyond the microphone target point; and

(C) Microphone location point—a point 15±0.3 m (49.2±1.0 ft) from the microphone target point on a normal to the vehicle path through the microphone target point. Alternately, the microphone location point may be a point 7.5±0.3 m (24.6±1.0 ft) from the microphone target point provided that the sound level reported is adjusted as provided in this appendix under paragraph (d)(3).

(ii) The microphone must be:

(A) Positioned at the microphone location point 1.2±0.1 m (3.9±0.3 ft) above the ground plane; and

(B) Oriented in a plane perpendicular to the vehicle path, and at an angle for which the microphone was calibrated to have the flattest response characteristics over the

frequency range of 100 Hz to 10,000 Hz when measured with respect to the motorcycle source.

(iii) The surface of the ground within at least the triangular area formed by the microphone location and the points 15±0.3 m (49.2±1 ft) prior to and 15±0.3 m beyond the microphone target point must be flat (±5 cm (2.0 in)) and level (grade not more than 0.5% along vehicle path), have a concrete or sealed asphalt surface, and be free from snow, soil or other extraneous material.

(iv) The vehicle path must be relatively smooth and of sufficient length for safe acceleration, deceleration and stopping of the motorcycle.

(2) The test site must be a flat, open space free of large sound-reflecting surfaces (other than the ground), such as parked vehicles, signboards, buildings or hillsides located within a 30±0.3 m (98.4±1.0 ft) radius of the microphone location and the following points on the vehicle path (see Figure 1):

(i) The microphone location point;

(ii) A point 15±0.3 m (49.2±1 ft) before the microphone target point; and

(iii) A point 15±0.3 m (49.2±1 ft) beyond the microphone target point.

(c) *Measurement procedure.* (1) The combined weight of the test rider and test equipment used on the motorcycle must not be more than 80 kg (176 lb) nor less than 75 kg (165 lb). Weights shall be placed on the motorcycle saddle behind the rider to compensate for any difference between the actual driver/equipment load and the required 75 kg (165 lb) minimum.

(2) The motorcycle must approach the microphone target point with the throttle fully open and in the highest gear. The motorcycle must start such that maximum speed is reached before the vehicle is within 7.5 m of the microphone target point. The motorcycle must continue along the vehicle path with fully open throttle and at maximum speed past the end point, at which time the throttle must be closed.

(3) If the motorcycle is equipped with an automatic transmission, the procedure of subparagraph (1), above, must be followed except that the highest selectable range shall be employed.

(d) *Measurements.* (1) The sound level meter must be set for fast response and for the A-weighting network. The microphone wind screen must be used. The sound level meter must be calibrated with the acoustic calibrator as often as is necessary throughout testing to maintain the accuracy of the measurement system.

(2) The sound level meter must be observed throughout the passby period. The highest noise level obtained for the run must be recorded.

(3) At least three measurements shall be made for each side of the motorcycle. Measurements must be made until at least three readings from each side are within 2 dB of each other. The noise level for each side must be the average of the three. The noise level reported must be for that side of the motorcycle having the highest noise level. If the microphone location point is 7.5 m from the vehicle path as allowed in this appendix under paragraph (b)(1)(i)(c), the noise level must be adjusted by subtracting 6 dB prior to being reported.

(4) While making noise level measurements, not more than one person other than the rider and the observer reading the meter may be within 15 m (49.2 ft) of the vehicle or microphone, and that person must be directly behind the observer reading the meter, on a line through the microphone and the observer.

(5) The ambient sound level (including wind effects) at the test site due to sources other than the motorcycle being measured must be no greater than 60 dB if the microphone is located 15 m from the vehicle path or 66 dB if the microphone is located 7.5 m from the vehicle path as allowed in this appendix under paragraph (b)(1)(i)(c).

(6) Wind speed at the test site during tests must be less than 20 km/h (12.4 mph).

(e) *Required data.* For each valid test, the following data must be recorded:

(1) Motorcycle type, serial number, model year, and date of manufacture.

(2) Names of persons conducting test.

(3) Test location.

(4) Wind speed and ambient noise level measured on the same day as the test and representative of conditions during the test.

(5) Description of the sound level meter including type, serial number, and calibration date.

(6) Description of the external acoustic calibrator including type, serial number, and calibration date.

(7) Maximum noise level for each pass on each side of the motorcycle including invalid readings and reasons for invalidation.

(8) Reported noise level.

(9) Other information as appropriate to completely describe testing conditions and procedure.

BILLING CODE 6560-26-M

FIGURE 1 — TEST MEASUREMENT AREA

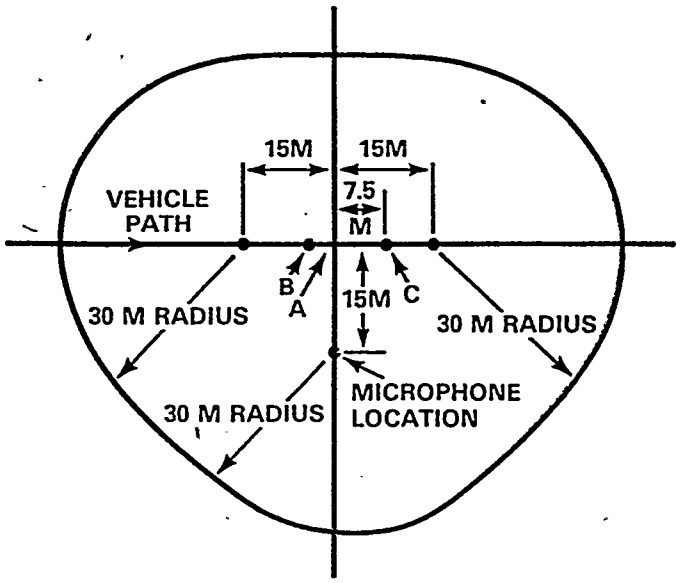

A—MICROPHONE TARGET POINT
B—ACCELERATION POINT (VARIABLE)
C—END POINT

TEST MEASUREMENT AREA

FIGURE 2 — CLOSING RPM

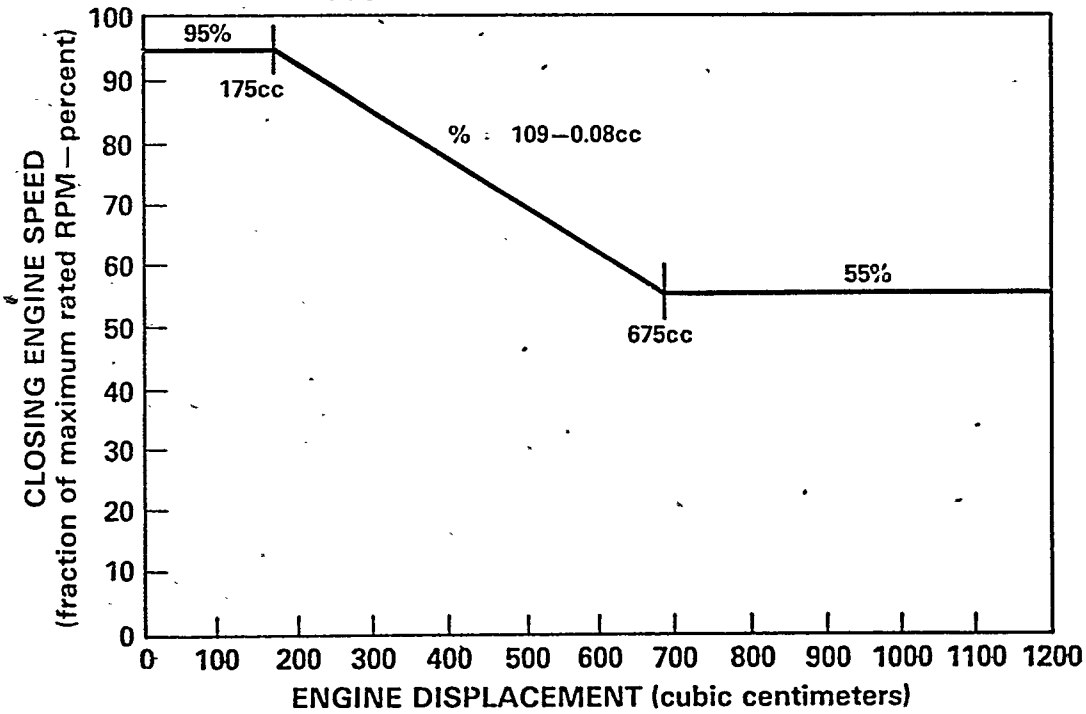

BILLING CODE 6560-26-C

Appendix II to Subparts D and E

Table 1—Model Year Production Volume of 50-99 Vehicles

Cumulative number of tests	Number of failing vehicles	
	Column A	Column B
1		
2		
3		3
4		3
5		3
6		3
7	0	3
8	0	4
9	0	4
10	0	4
11	1	4
12	1	4
13	1	5
14	1	5
15	2	5
16	2	5
17	2	5
18	2	5
19	2	5
20	4	5

Table 2—Model Year Production Volume of 100-199 Vehicles

Cumulative number of tests	Number of failing vehicles	
	Column A	Column B
1		
2		
3		3
4		3
5		3
6		3
7	0	4
8	0	4
9	0	4
10	0	4
11	1	4
12	1	5
13	1	5
14	1	5
15	1	5
16	2	5
17	2	5
18	2	5
19	2	5
20	4	5

Table 3—Model Year Production Volume of 200-399 Vehicles

Cumulative number of tests	Number of failing vehicles	
	Column A	Column B
1		
2		
3		3
4		3
5		3
6		3
7	0	4
8	0	4
9	0	4
10	0	4
11	0	5
12	1	5
13	1	5
14	1	5
15	1	5
16	2	5
17	2	5
18	2	5
19	2	5
20	4	5

Table 4—Model Year Production Volume of 400 or More Vehicles

Cumulative number of tests	Number of failing vehicles	
	Column A	Column B
1		
2		
3		3
4		3
5		3
6		4
7	0	4
8	0	4
9	0	4
10	0	4
11	0	5
12	1	5
13	1	5
14	1	5
15	1	5
16	2	5
17	2	5
18	2	5
19	2	5
20	4	5

[FR Doc. 80-40478 Filed 12-30-80; 8:45 am]
BILLING CODE 6560-01-M

federal register

Wednesday
December 31, 1980

Part IV

Environmental Protection Agency

Noise Emission Standards for Transportation Equipment; Additional Testing Requirements for Motorcycles and Motorcycle Exhaust Systems; Proposed Rulemaking

ENVIRONMENTAL PROTECTION AGENCY

40 CFR Part 205

[N-FRL 1518-1]

Noise Emission Standards for Transportation Equipment; Additional Testing Requirement for Motorcycles and Motorcycle Exhaust Systems

AGENCY: U.S. Environmental Protection Agency (EPA).

ACTION: Notice of Proposed Rulemaking (NPRM).

SUMMARY: The Environmental Protection Agency (EPA) proposes to amend the testing requirements for Noise Emission Standards for Motorcycles and Motorcycle Exhaust Systems, published elsewhere in today's Federal Register. The proposed amendments will require manufacturers to remove all easily removable components from their exhaust systems before conducting the tests necessary to show compliance with applicable standards. This action is necessary because the control of motorcycle noise is dependent on exhaust systems retaining their noise suppression performance beyond the time of sale. These amendments are expected to encourage manufacturers to design exhaust systems in ways which will reduce the incidence of tampering by consumers.

DATE: The official docket for this proposed rulemaking will remain open for submission of written comments until 4:30 pm, March 31, 1981.

ADDRESS: Written comments to the docket should be mailed to the following address: Director, Standards and Regulations Division, Attention: ONAC Docket 81-01 (Motorcycles), ANR-490, U.S. Environmental Protection Agency, Washington, D.C. 20460.

FOR FURTHER INFORMATION CONTACT: Mr. Fred Newberry, Project Officer, Standards and Regulations Division (ANR-490), U.S. Environmental Protection Agency, Washington, D.C. 20460; or phone (202) 557-7666.

SUPPLEMENTARY INFORMATION: Elsewhere in today's Federal Register, EPA is promulgating Noise Emission Standards for Motorcycles and Motorcycle Exhaust Systems. By establishing these noise standards the Agency expects to reduce the adverse effects of high levels of motorcycle noise on the public's health and welfare. Lowering motorcycle noise levels is expected to result in approximately a 60-80 percent reduction in interference with human activities and an 8-12 percent reduction in the extent and severity in overall traffic noise impact. However, the success of these final regulations is largely dependent on motorcycle exhaust systems retaining their noise suppression performance beyond the time of sale. Exhaust systems lose their noise attentuation characteristics because of two factors: Degradation of components and simple removal of components. The problem of highly degradable components such as certain "glass packs" in motorcycle exhaust systems is dealt with in the regulation by the requirement that motorcycle exhaust systems when properly used and maintained on Federally-regulated motorcycles must meet applicable noise emission standards over a specified period of time. The Agency plans to deal with the problem of easily removable components in exhaust systems, such as baffles, by proposing these amendments to the regulation.

Several aftermarket manufacturers offer exhaust systems with a variety of removable baffles or adjustable vanes that can be added or decreased in number to obtain the desired results in performance and noise level. Some mufflers are distributed with a kit containing two baffles: One for use in off-road situations which will increase performance (and noise) and a second baffle for quieter street use. Removal of these baffles is usually accomplished by simply removing bolts or screws. Table 4-1 of the "Regulatory Analysis of Noise Emission Regulations for Motorcycles and Motorcycle Exhaust Systems" (EPA Document No. 550/9-80-217) shows the effects of changing exhaust system baffles on performance and noise levels. Exchanging the baffles on one manufacturer's exhaust system increased the noise levels of the test motorcycle by 10 dB.

The effects of completely removing baffles from motorcycle exhaust systems are shown on page 4-25 of the Regulatory Analysis. Removal of these baffles caused the noise level of motorcycles to increase from 15 to 29 dB above the noise levels of the same motorcycle with an original equipment (OEM) exhaust system. By comparison, when the OEM muffler was completely removed, the motorcycle's noise level increased between 16 and 22 dB. Thus, the effects of removing baffles from a muffler can be more significant than removing the muffler itself. This is because a muffler without baffles can act as a megaphone and actually amplify the noise levels emitted by the motorcycle.

Although the removal of baffles from a Federally-regulated motorcycle exhaust system constitutes a tampering violation under the provisions of the Noise Control Act, the Agency believes that this is and can be expected to remain a major noise problem unless the Agency takes further action. The Agency had considered a program by which exhaust systems would be evaluated on the basis of design characteristics, to discourage the manufacture of motorcycle exhaust systems with easily removable baffles and highly degradable components. (Refer to Issues 3.8 and 9.21 of the Docket Analysis to the NRM.) However, the unfavorable public comments and analyses by the Agency indicated that a better solution for this issue was necessary. Accordingly, the Agency is proposing this amendment to require manufacturers to conduct the testing required to demonstrate compliance to the noise standards with all easily removable components of the exhaust system removed. The Agency believes that this requirement will encourage manufacturers to design exhaust systems which will reduce the incidence of tampering by consumers, or which will comply with applicable standards when easily removable components are removed.

The Agency proposes that these amendments be effective one year after promulgation to allow manufacturers adequate lead time for design and production of complying exhaust systems. A number of manufacturers currently produce replacement exhaust systems with permanent fixtures. Making a baffle a permanent fixture, rather than removable, by welding or other simple means is not expected to require extensive redesign of current exhaust systems nor increase their costs. The following discusses the provisions of the proposed amendments.

1. The Agency proposes to amend § 205.151(a) by adding subparagraph (31) which defines "easily removable component."

2. and 3. The Agency proposes to amend Appendix I-1 and Appendix I-2 by adding a new paragraph, *Vehicle Preparation.* The new paragraph requires motorcycle and motorcycler replacement exhaust system manufacturers to remove all "easily removable components" of exhaust systems before testing their products. Since Appendix I-1 and Appendix I-2 are the EPA test procedures for showing compliance with applicable noise emission standards for EPA Product Verification Testing and Selective Enforcement Audits, the Agency predicts that these manufacturers will be discouraged from designing exhaust

systems with "easily removable components" unless their product can pass the test with these components removed.

Note.—EPA has determined that this action is not a "significant" regulation, and therefore does not require a Regulatory Analysis in accordance with Executive Order 12044.

The Agency is committed by statute and policy to public participation in the decisionmaking process for its environmental regulations. That policy encourages and solicits communications and public comments on all aspects of the proposed amendments to the regulation. These contributions are desired from as many diverse views as possible and when received, such information will be fully analyzed. Necessary changes in these proposed amendments will be made and explained when the amendments are published in final form.

These amendments are proposed under authority of Sections 6 and 13 of the Noise Control Act of 1972, 42 U.S.C., 4095, and 4912.

Dated: December 19, 1980.

Douglas M. Costle,

Administrator.

The Environmental Protection Agency (EPA) proposes to amend 40 CFR Part 205 as follows.

Subpart D—Motorcycles

1. In §205.151 EPA proposes to amend paragraph (a) by adding subparagraph (31) as follows:

§205.151 Definitions.

(a) * * *

(31) "Easily removable component" means any exhaust system part (not to include headerpipes, expansion chambers, or the muffler shell) that can be removed, without causing highly visible damage to the exterior of the exhaust system, by removing bolts, screws, or similar fastening devices, or by shearing spot welds with hammer and chisel, or by other simple means of dislodgement.

2. EPA proposes to amend Appendix I-1 by redesignating paragraphs (c) through (e) as paragraphs (d) through (f), respectively, and by adding a new paragraph (c) as follows:

Appendix I-1 Test Procedure for Street and Off-road Motorcycles

* * * * *

(c) *Vehicle Preparation.* All easily removable components of the exhaust system must be removed before testing.

* * * * *

3. EPA proposes to amend Appendix I-2 by redesignating paragraphs (c) through (e) as paragraphs (d) through (f), respectively, and by adding a new paragraph (c) as follows:

Appendix I-2. Test Procedure for Street Motorcycles That Meet the Definition of § 205.151(a)(2)(ii) (Moped-type Street Motorcycles).

* * * * *

(c) *Vehicle Preparation.* All easily removable components of the exhaust system must be removed before testing.

* * * * *

[FR Doc. 80-40479 Filed 12-30-80; 8:45 am]

BILLING CODE 6560-27-M

Federal Register

Wednesday
December 31, 1980

Part V

Interstate Commerce Commission

Motor Carrier Rate Bureaus; Tariffs Containing Joint Rates and Through Routes; Freight Forwarder Contract Rates; Elimination of Gateway Restrictions and Circuitous Route Limitations; Removal of Restrictions From Authorities of Motor Carriers of Property; Intercorporate Hauling Reform; Lease of Equipment and Drivers to Private Carriers; and Interpretation—Intercorporate Hauling; Rules Governing Applications and Acceptable Forms of Request for Operating Authority

INTERSTATE COMMERCE COMMISSION

49 CFR Part 1331

[Ex Parte No. 297 (Sub No. 5)]

Motor Carrier Rate Bureaus—Implementation of Pub. L. 96-296

AGENCY: Interstate Commerce Commission.

ACTION: Final rules.

SUMMARY: In this proceeding [49 FR 55734, August 21, 1980], we proposed new standards to govern the activities of motor carrier rate bureaus. Our final decision (issued concurrently with this notice) setting these standards requires conforming amendments to the CFR. Amendments are also required to conform the regulations to the codification of the Interstate Commerce Act.

EFFECTIVE DATE: These amendments are effective December 31, 1980.

FOR FURTHER INFORMATION CONTACT: Richard B. Felder or Jane F. Mackall, (202) 275-7656.

SUPPLEMENTARY INFORMATION: The changes to 49 CFR 1331 are as follows:

PART 1331—SECTION 10706 APPLICATIONS.

1. Part 1331 is retitled—Section 10706 Applications

§ 1331.2 [Amended]

2. Section 1331.2(e) is amended by deleting the phrase "section 5a of the Interstate Commerce Act, as amended" and inserting in its place "49 U.S.C. 10706."

§ 1331.4 [Amended]

3. Section 1331.4 is amended by deleting the phrase "section 5a(4) of the Interstate Commerce Act" and inserting in its place "49 U.S.C. 10706(d)."

§ 1331.5 [Amended]

4. Section 1331.5 is retitled—Public notice—non-motor independent actions.

§ 1331.45 [Amended]

Section 1331.45 is amended by deleting the phrase "section 5a of the Interstate Commerce Act" and inserting in its place "49 U.S.C. 10706."

§ 1331.6 Changing or cancelling railroad rates established by independent action.

* * * * *

§ 1331.6 [Amended]

5. Section 1331.6 is retitled—Changing or cancelling railroad rates established by independent action.

6. Section 1331.6(a)(3) is amended by deleting the phrase "section 5a or 5b of the Interstate Commerce Act, 49 U.S.C. 5b, 5c," and inserting in its place "49 U.S.C. 10706(a)."

7. Section 1331.6(a)(5) is reserved.

8. Section 1331.6(a)(6) is renumbered 1331.6(a)(5).

9. Section 1331.6(a)(7) is removed.

10. Section 1331.6(b) is amended by deleting the phrase "Motor carrier and railroad" and inserting in its place "Railroad."

11. *Section 1331.6(c) is revised as follows:*

* * * * *

(c) *Opportunity to be heard.* Before the Committee or other group designated under the terms of a railroad rate bureau's agreement meets to consider a proposal to change or cancel a rate established by independent action (whether for the purpose of voting to accept or reject the proposal or to consider whether to recommend it to the rate bureau membership for a final vote), shippers and other interested parties shall have no less than fourteen days (not counting the day of the notice of the proposal is sent to these parties) to respond to the notice to express their views to the appropriate committee or group in whatever manner they so choose, be it in writing, in person or by some other means.

12. Section 1331.6(d) is removed.

13. Section 1331.6(e) is renumbered 1331.6(d). In the newly renumbered 1331.6(d) delete the phrase "paragraphs (b) and (d)" and insert in its place the phrase "paragraph (b)".

14. Section 1331.6(f) is renumbered 1331.6(e). In the newly renumbered 1331.6(e) delete the phrase "paragraph (e)" and insert in its place "paragraph 6(d)", delete the remainder of the section following the first sentence.

This decision does not significantly affect the quality of human environment, energy consumption, or small business. The amended rules are issued under the authority of 49 U.S.C. 10321 and 10706.

Decided: December 19, 1980.

By the Commission. Chairman Gaskins, Vice Chairman Gresham, Commissioners Clapp, Trantum, Alexis and Gilliam. Commissioner Gilliam concurring with a separate expression. Commissioner Clapp reserves his right to submit a separate expression at a later date.

Agatha L. Mergenovich,

Secretary.

[FR Doc. 80-40514 Filed 12-30-80; 8:45 am]

BILLING CODE 7035-01-M

49 CFR Part 1331

[Ex Parte No. 297 (Sub. No. 5)]

Motor Carrier Rate Bureaus—Implementation of Pub. L. 96-296

AGENCY: Interstate Commerce Commission.

ACTION: Notice of decision; policy statement.

SUMMARY: The Commission has issued a final decision in this proceeding establishing standards for motor carrier rate bureau activities. This decision implements the rate bureau provisions of the Motor Carrier Act of 1980. Copies of the complete decision are available from the Secretary, Interstate Commerce Commission, Washington, D.C. 20423, (202) 275-7428.

EFFECTIVE DATE: The decision is effective December 31, 1980.

FOR FURTHER INFORMATION CONTACT: Richard B. Felder or Jane F. Mackall (202) 275-7656.

SUPPLEMENTAL INFORMATION: Notice of this proceeding was given at 45 FR 55734, August 21, 1980. The major findings in this decision are as follows:

1. Rate bureau agreements must provide each carrier the absolute right to decide whether or when an independent action, released rate, or rate within the zone of freedom, will be docketed. If independent actions are docketed they may not be discussed prior to the effective date of the tariff item.

2. Rate bureau employees and employee committees are restricted from initiating or determining whether to adopt, reject, or otherwise dispose of tariff proposals. They may provide individual member carriers with expert analysis and technical assistance, provided that all communications are kept confidential.

3. Rate bureaus will promptly divulge the name(s) of the proponent(s) of tariff matter and the voting record. They will provide detailed public notice of their meetings and agenda and they will admit all persons and permit them to take notes and make sound recordings.

4. To vote for an absentee, a carrier must possess a written proxy containing the grantor(s) signature, the specific item(s) for which the vote is released, directions on voting, and affirmation of authority. A copy of the proxy and the written affirmation or authority executed by the proxy holder for the grantor will be made part of the voting record and ballot.

5. The quorum for holding meetings of the organization is 30 percent of the membership for committees, it is 50 percent of the members.

6. The bureaus are required to maintain detailed minutes of all meetings where tariff items were discussed. The bureaus will be subject to withdrawal of their immunity for serious continuing violations of Commission standards, and individual tariff publications will be subject to rejection, suspension, or investigation for improprieties in the rate bureau process.

7. Carriers are immunized from the effect of the anti-trust laws only after filing with the Commission an approved agreement consistent with this decision and only for those activities conducted within the explicit terms of that agreement.

This decision does not significantly affect the quality of the human environment, energy consumption, or small business. The amended policy is issued under the authority of 49 U.S.C. 10321 and 10706.

Decided: December 19, 1980.

By the Commission, Chairman Gaskins, Vice Chairman Gresham, Commissioners Clapp, Trantum, Alexis and Gilliam. Commissioner Gilliam concurring with a separate expression.

Agatha L. Mergenovich,

Secretary.

[FR Doc. 80-40515 Filed 12-30-80; 8:45 am]

BILLING CODE 7035-01-M

INTERSTATE COMMERCE COMMISSION

49 CFR Part 1300

[Ex Parte No. 261 (Sub-No. 1]

In the Matter of Tariffs Containing Joint Rates and Through Routes—Freight Forwarders and Nonvessel Operating Common Carriers by Water (NVO)

AGENCY: Interstate Commerce Commission.

ACTION: Notice of Proposed Rulemaking.

SUMMARY: The Commission is reopening this proceeding in response to the Motor Carrier Act of 1980, Public Law 96–296. We are reconsidering the finding of our prior decision (355 I.C.C. 913 (1977)) that rail, motor, or water carriers subject to our jurisdiction are precluded, as a matter of policy, from entering into international joint rates with nonvessel operating common carriers. We are therefore proposing to modify 49 CFR § 1300 *et seq.* which governs intermodal freight tariffs by adding nonvessel operating common carriers to the provisions.

DATES: Comments are due on or before January 30, 1981.

ADDRESS: Send comments to: Office of Proceedings, Room 5356, Interstate Commerce Commission, Washington, D.C. 20423.

FOR FURTHER INFORMATION CONTACT: Richard Felder or Jane F. Mackall, (202) 275–7656.

SUPPLEMENTARY INFORMATION: In our prior decision we considered the possible application of 49 CFR 1300 *et seq.* to the intermodal operations of freight forwarders and nonvessel operating water common carriers (NVO's) between points in foreign countries. We found that (1) freight forwarders have no statutory authority to establish and participate in joint rates and international through route tariffs; and (2) rail, motor, or part III water carriers are precluded, as a matter of policy, from entering into joint rates with nonvessel operating water common carriers.

Since the passage of Section 22(h) of the Motor Carrier Act, 1980 Public Law 96–296, freight forwarders have the statutory authority to establish and participate in joint rates and international through route tariffs. In Ex Parte 364 (Sub-No. 1) *Freight Forwarder Contract Rates—Implementation of Pub. L. 96–296,* (decided December 19, 1980), we extend the application of 49 CFR 1300 *et seq.* to freight forwarders.

Our refusal in Ex Parte No. 261 (Sub-No. 1), to allow NVO's to establish international joint rates with carriers subject to our jurisdiction was based on policy considerations. We do not believe these considerations are still valid.

First, we reasoned that because the Federal Maritime Commission (FMC) imposes no restrictions on who may become NVO's freight forwarders could easily become NVO's. We were afraid that, were we to extend tariff rules to NVO's, freight forwarders could circumvent ICC rules by becoming NVO's and establishing joint rates with ICC regulated carriers. Since freight forwarders are now allowed to establish joint rates, there is no longer, an incentive for freight forwarders to circumvent our rules.

Second, we believed that allowing NVO's to establish joint rates with ICC regulated carriers would allow an NVO to engage in freight forwarding in the United States without a certificate from the Commission in competition with ICC regulated forwarders. This would render valueless the certificates which forwarders obtained at the expense of large investments of money and time. We have since eased our entry requirements. We no longer think that freight forwarders should be insulated from competition with NVO's.

Finally, we believed the FMC did not impose enough restrictions on who could become an NVO. Therefore, we were afraid that we could not assure the shipping public that the NVO's are able to perform the service properly. However in light of spirit of increased competition in the transportation industry and the fact that we should rely on the FMC's judgment that NVO's are fully able to serve the shipping public, we are no longer concerned with this issue.

We are therefore proposing to modify 49 CFR 1300 *et seq.,* which governs intermodal freight tariffs, by adding NVO's to the provisions.

It is proposed that in 49 CFR, the second sentence of § 1300.0(a)(1), introductory text of §§ 1300.12, 1300.12(e), and 1300.67(b)(1) are revised as follows:*

1. The second sentence of § 1300.0(a)(1) is revised to read as follows:

§ 1300.0 General provisions; definition.

(a)(1) * * *

The regulations in this part shall also govern the construction and filing of tariffs naming through routes and joint rates over the lines of common carriers by freight forwarders, water, or pipeline, subject to the Interstate Commerce Act, on the one hand, and nonvessel or vessel-operating common carriers by water engaged in the foreign commerce of the United States, as defined in the Shipping Act, 1916, on the other hand, for the transportation of property between any place in the United States and any place in a foreign country; and between freight forwarders and railroads. See § 1300.67.

2. The introductory text of § 1300.12 is revised to read as follows:

§ 1300.12 Restoration and discontinuance of water service.

Tariffs containing rail-and-water, freight forwarder-and-water, rail-and-nonvessel operating water common carriers, or all-water rates applicable via routes upon which it is necessary to close navigation during a portion of each year, must provide for the restoration and discontinuance of service over such routes in the manner prescribed in paragraphs (a) to (e) of this section.

3. In § 1300.12 paragraph (e) is amended to read as follows:

§ 1300.12 Restoration and discontinuance of water service.

* * * * *

(e) *Tariffs may be reissued.* Tariffs containing rail-and-water, freight forwarder-and-water, rail-and-nonvessel operating water common carrier, or all-water rates may be reissued or amended at any time in the regular manner, but tariffs containing the clause prescribed

*The modification to 49 CFR 1300.0(a)(1) and 1300.67(b) conforms with the proposed changes in Ex Parte No. 230 (Sub-No. 5) Improvement of TOFC/COFC Regulation, served November 21, 1980.

by paragraph (b) of this section which are made effective subsequent to the date of actual discontinuance of service must contain a statement that service was discontinued on ———— as per supplement No. ———— to ICC No. (former tariff) and that supplement announcing discontinuance of service for that season will not be filed.

4. In § 1300.67(b)(1) is revised as set forth below.

§ 1300.67 Export and import traffic—ocean carriers.

* * * * *

(b) *Through routes and joint rates.* (1) A common carrier by pipeline, freight forwarder, or water, subject to the Interstate Commerce Act (hereinafter referred to in this section as the domestic carrier), may establish a through route and joint rate with either a nonvessel or a vessel-operating common carrier by water engaged in the foreign commerce of the United States (hereinafter referred to in this section as the ocean carrier), as defined in the Shipping Act, 1916, for the transportation of property between any place in the United States and any place in a foreign country. Every tariff naming such a through route and joint rate shall be filed with this Commission. The tariff may be filed in the name of the ocean carrier, a conference of ocean carriers, the domestic carrier or the duty appointed tariff publishing agent of such carriers.

Comments, limited to the rule changes proposed in this notice are invited. Comments should also include discussion of what, if any, significant effect the rule changes would have on the quality of the human environment, conservation of energy resources, or small businesses.

(49 U.S.C. 10321, 10703, 10762, 5 U.S.C. 553)

Decided: December 19, 1980.

By the Commission, Chairman Gaskins Vice Chairman Greshman, Commissioners Clapp, Trantum, Alexis, and Gilliam. Commissioner Gresham concurring. Commissioner Clapp absent and not participating.

James H. Bayne,

Acting Secretary.

[FR Doc. 80-40517 Filed 12-30-80; 8:45 am]

BILLING CODE 7035-01-M

INTERSTATE COMMERCE COMMISSION

49 CFR Parts 1080, 1300 and 1308

[Ex parte No. 364 (Sub-No. 1)]

Freight Forwarder Contract Rates—Implementation of P. L. 96-296

AGENCY: Interstate Commerce Commission.

ACTION: Final rules.

SUMMARY: The Commission has modified existing rules allowing: 1) the filing of contract rates between freight forwarders and motor common and contract carriers; and 2) the filing of joint rates and through routes between freight forwarders and rail and water carriers. Other editorial changes are adopted to comport with other legislated changes and to eliminate obsolete provisions.

DATES: The modifications shall become effective January 30, 1981.

FOR FURTHER INFORMATION CONTACT: Richard B. Felder or Jane F. Mackall, (202) 275-7656.

SUPPLEMENTARY INFORMATION: We instituted this proceeding by Notice of Proposed Rulemaking, 45 Fed. Reg. 53190 (August 11, 1980) in response to the Motor Carrier Act of 1980, Public Law 96-296. The notice addressed two sections of the new Act, section 10(d) and section 22(h). We have, on this date, issued a final decision making the necessary CFR changes to implement the legislation. *Copies of the complete decision are available from the Secretary, ICC, Washington, D.C.* The rule changes and a summary of our reasoning follows.

Section 10(d) amends 49 U.S.C. 10766, "Freight forwarder traffic agreements." That section describes the types of agreements freight forwarders may make with one another and with other carriers. Section 10(d) deletes the 450 mile requirement concerning agreements with motor common carriers. It also permits freight forwarders to contract with motor contract carriers. We received no objections to our proposed rules to implement these changes and we will make them as they affect these contracts.

However we find that our original proposal to implement Section 22(h) in Part 1080, is inadequate for describing the arrangements between freight forwarders and water carriers and railroads intended by the Congress.

We have therefore examined Part 1300 and found it a more appropriate vehicle for implementing the new legislation.

In our decision we also found that the term "contracts" as it appears in section 22(h) means agreements for joint rates and through routes. Our analysis was based on the placement of the subsection in the Motor Carrier Act, the legislative history, and the problem associated with a literal interpretation of the term "contracts."

It was also clear from the legislative history of this section,[1] that freight forwarders are to be considered common carriers. The history also states that the contemplated contracts are negotiated arrangements between common carriers relative to a mutual understanding, and that intermodalism is to be fostered. We found no bar to this conclusion in section 10744. We concluded that these negotiated arrangements are for through routes and joint rates between carriers.

Finally, in response to comments from water interests and the FMC, we found that Congress intended that we read Section 22(h) of the Motor Carrier Act the same way for rail and water carriers.

Final Rules

1. Accordingly, 49 CFR 1080 is revised to read as follows:

PART 1080—CONTRACTS, FORWARDERS—MOTOR COMMON AND CONTRACT CARRIERS

Sec.
1080.1 Filing.
1080.2 Specifications.
1080.3 Amendments.
1080.4 Time of filing and notice of termination.
1080.5 Public inspection.

Authority: 49 U.S.C. 10321, 10703, 10749, 10762, 10766(b) and 5 U.S.C. 553.

§ 1080.1 Filing.

All contracts and amendments between freight forwarders and motor common and contract carriers entered into under 49 U.S.C. 10766(b) shall be in writing. The freight forwarder must file 2 copies of all these contracts with the Interstate Commerce Commission.

§ 1080.2 Specifications.

Contracts shall show:

(a) In the upper right-hand corner, a number in the consecutive series of the forwarder;

(b) The full name and address of each party to the contract, and the ICC number, omitting subnumbers, identifying the operating authority of each;

(c) A description of the transportation and other services to be performed by the motor, rail, or water carrier; the points or area where the service will be performed; the compensation (set forth in dollars or cents per unit of weight or other measure, or as a specific percentage of the otherwise applicable motor or freight forwarder charge. If the latter method is used, the contract must cite the governing tariff by ICC number or by ICC Alpha Code deisgnation);

(d) The effective date of the contract; and

(e) All other terms and conditions agreed upon between the parties to the contract.

§ 1080.3 Amendments.

Amendments to contracts shall show their effective dates, and indicate all superceded provisions. They shall reflect the same series number as the original contract and be consecutively numbered.

§ 1080.4 Timing of filing and notice of termination.

Contracts, amendments, and termination notices shall be filed within 10 days after their effective dates. If a new contract, rather than an amendment, is filed, it shall specifically cancel the old contract. If names of parties are changed but the contract is to be continued, a new contract showing the names of the new parties or a document adopting the old contract and reflecting the new names shall be filed within 30 days.

§ 1080.5 Public inspection.

All contracts and amendments filed with the Commission under the rules and regulations of this part shall be open to public inspection.

2. 49 CFR 1300(a)(1) is amended, and the introductory text of 1300.12, 1300.12(e), 1300.67(b), and 1308.0(c) are revised as follows:*

a. Section 1300.0(a)(1) is amended by revising the second sentence to read as follows:

§ 1300.0 General provisions; definition.

(a)(1) * * *.

The regulations in this part shall also govern the construction and filing of tariffs naming through routes and joint rates over the line of common carriers by freight forwarders, water, or pipelines, subject to the Interstate Commerce Act, on the one hand, and vessel-operating common carriers by water engaged in the foreign commerce of the United States, as defined in the Shipping Act, 1916, on the other hand,

[1] H.R. Rep. No. 96-1069, 96th Cong., 2d Sess. (1980). House Comm. on Public Works and Transportation, Motor Carrier Act of 1980, Report Together with Additional, and Minority Views.

* The modification to 49 CFR 1300.0(a)(1) and 1300.67(b) conforms with the proposed changes in Ex Parte No. 230. (Sub-No. 5) Improvement of TOFC/COFC Regulation, served November 21, 1980.

for the transportation of property between any place in the United States and any place in a foreign country and between freight forwarders and railroads. See § 1300.67.

b. In § 1300.12 the introductory text and paragraph (e) are revised to read as follows:

§ 1300.12 Restoration and discontinuance of water service.

Tariffs containing rail-and-water, freight forwarder-and-water, rail-and-nonvessel operating water common carrier, or all-water rates applicable via routes upon which it is necessary to close navigation during a portion of each year, must provide for the restoration and discontinuance of service over such routes in the manner prescribed in paragraphs (a) to (e) of this section.

* * * * *

(e) Tariffs may be reissued. Tariffs containing rail-and-water, freight forwarder-and-water, or all-water rates may be reissued or amended at any time in the regular manner, but tariffs containing the clause prescribed by paragraph (b) of this section which are made effective subsequent to the date of actual discontinuance of service must contain a statement that service was discontinued on ———— as per supplement No. ———— to ICC No. ———— (former tariff) and that supplement announcing discontinuance of service for that season will not be filed.

c. Section 1300.76(b)(1) is revised to read as follows.

§ 1300.67 Export and import traffic—ocean carriers.

* * * * *

(b) *Through routes and joint rates.* (1) A common carrier by pipeline, freight forwarder, or water, subject to the Interstate Commerce Act (hereinafter referred to in this section as the domestic carrier), may establish a through route and joint rate with a vessel-operating common carrier by water engaged in the foreign commerce of the United States (hereinafter referred to in this section as the ocean carrier), as defined in the Shipping Act, 1916, for the transportation of property between any place in the United States and any place in a foreign country. Every tariff naming such a through route and joint rate shall be filed with this Commission. The tariff may be filed in the name of the ocean carrier, a conference of ocean carriers, the domestic carrier or the duly appointed tariff publishing agent of such carriers.

d. Section 1308.0(c) is revised to read as follows.

§ 1308.0 General provisions; definitions.

* * * * *

(c) *Nonapplication.* Tariff governed by the regulations in this subpart must not contain:

Joint water-rail rates;
Joint water-motor rates;
Joint water-rail-motor rates;
Passenger fares;
Joint water-freight forwarder rates;
Joint water-rail-freight forwarder rates;
Contract carrier rates or charges.

Furthermore, tariffs published under this subpart must not contain joint rates and through routes over the lines of common carriers by water subject to the Interstate Commerce Act, on the one hand, and vessel-operating common carriers by water engaged in the foreign commerce of the United States, as defined in the Shipping Act, 1916, on the one hand, for the transportation of property between any place in the United States and any place in a foreign country. For applicable regulations, see §§ 1300.67 and 1307.49.

This decision will not significantly affect the quality of the human environment or conservation of energy resources.

(49 U.S.C. 10321, 10703, 10749, 10762, 10766(b), and 5 U.S.C. 553)

Dated: December 19, 1980

By the Commission, Chairman Gaskins, Vice Chairman Gresham, Commissioners Clapp, Trantum, Alexis, and Gilliam. Vice Chairman Gresham concurring. Commissioner Clapp absent and not participating.

James H. Bayne,
Acting Secretary.

[FR Doc. 80-40510 Filed 12-30-80; 8:45 am]
BILLING CODE 7035-01-M

---

49 CFR Part 1042

[Ex Parte No MC-142]

Elimination of Gateway Restrictions and Circuitous Route Limitations

Decided: December 19, 1980.

AGENCY: Interstate Commerce Commission.

ACTION: Final rules.

SUMMARY: The Commission is adopting rules which eliminate gateway restrictions and circuitous route limitations, as required by Section 6 of the Motor Carrier Act of 1980. The rules allow a property carrier which can lawfully provide through service either by joining together separate grants of operating authority, or by operating over a single regular route, to perform that service over any available route. Property Superhighway and Deviation Rules are, for the most part, removed as obsolete. The rules are expected to reduce energy consumption and improve operating efficiencies in the property and motor carrier industry.

EFFECTIVE DATE: The rules become effective on December 28, 1980.

FOR FURTHER INFORMATION CONTACT: Karl Morell, (202) 275-7953, or Edward E. Guthrie, (202) 275-7691.

SUPPLEMENTARY INFORMATION: Section 6 of the Motor Carrier Act of 1980, enacted July 1, 1980, added a new subsection (h)(1)(A) to 49 U.S.C. 10922 which requires the Commission to eliminate gateway restrictions and circuitous route limitations on the operations of motor common carriers of property. On September 16, 1980, we instituted this proceeding by issuing a notice of proposed rulemaking (45 FR 61333) to implement this new statutory requirement. In that notice, we announced that we were considering adopting rules which would allow any property carrier which can lawfully provide through service either by joining together separate grants of operating authority, or by operating over a single regular route, to perform that service over any available route. In a supplemental notice (45 FR 75717), we addressed the effect of Section 6 of the Act on those proceedings involving interim gateway restrictions which were not administratively final on July 1, 1980. In the supplemental notice, we proposed to consider those interim gateway restrictions to be subject to automatic elimination by virtue of the requirements of Section 6.

We invited the public to comment and 20 statements were received. Our discussion will be limited to three procedural matters and those provisions of the proposed rules which we have been requested to modify or clarify by various parties.

Procedural matters.—Congress has required that we eliminate gateway restrictions and circuitous route limitations by December 28, 1980. Because of the limited time Congress has provided for the promulgation of these rules, we believe there is good cause to make them effective in less than 30 days. See 5 U.S.C. 553(d)(3). The rules are permissive and do not require carriers to change their operations. Also, since the purpose of these rules is to relieve restrictions in outstanding authorities, they do not require the normal 30 days notice before their effective date. See 5 U.S.C. 553(d)(1). Therefore, the rules will be made effective on December 28, 1980.

The Motor Carrier Lawyers Association (MCLA) requests oral

argument in this proceeding to address the issue of whether the Commission should retain the distinction between regular- and irregular-route operations. The MCLA contends that the proposed rules will eliminate this longstanding distinction without the affected public having had an opportunity specifically to address this issue. The purpose of this proceeding is to implement the statutory requirement that we eliminate "gateway restrictions and circuitous route limitations." We do not believe that this statutory language can be logically interpreted as excluding the circuitous operations of regular-route carriers. The proposed rules generally will permit regular-route carriers to use any available route in operating between their authorized service points. This, of course, will erode, to some extent, the distinctions between regular- and irregular-route motor carrier operations. Congress presumably was aware of this when the legislation was drafted. Congress' expressed concerns about efficiency, economy, and productivity in the motor carrier industry may well require a reevaluation of the distinctions between regular- and irregular-route operations as established in *Transportation Activities, Brady Transfer & Storage Co.*, 47 M.C.C. 23 (1947). However, we do not believe that it is necessary or practicable to hold oral arguments on this issue in this proceeding, especially because of the statutory requirement that we promulgate final rules by December 28, 1980. Accordingly, the request for oral argument is denied.

The MCLA also contends that this proceeding is fundamentally flawed because the Commission has not met its obligations under the national policies of environmental and energy concerns. It contends that we are required by law to prepare an environmental impact statement and a statement of energy impact. Therefore, the MCLA requests that we hold this proceeding in abeyance and, once the necessary statements are prepared, that we renotice the proceeding. In the notice in this proceeding, we indicated that it did not appear that this action would significantly affect the quality of the human environment, but it was expected to contribute to the conservation of energy resources. Comments were expressly invited on these issues. Moreover, the question of the effect of the proposal on the environment and energy conservation has been studied by the Commission's Energy and Environment unit and will be discussed later in this document. Therefore, the MCLA's motion to renotice is denied.

Past operations through gateways.—The MCLA and a group of 15 carriers, which filed a joint comment, contend that the proposed rules are beyond the scope of the Congressional intent in that the rules fail to draw a distinction between a carrier that is actually operating over a gateway and one which merely holds authority that would permit such an operation. The MCLA argues that there can be only a "gateway restriction", as contemplated by Congress, when a carrier is now actively operating over the gateway. The group of carriers contends that it is imperative that the Commission include in the rules an appropriate definition of the term "gateway", and that this term be given its natural meaning as developed in past Commission decisions. They assert that in *Gateway Elimination*, 119 M.C.C. 170 (1973) and 119 M.C.C. 530 (1974), the Commission defined a "gateway" in terms of a carrier providing an active service through a specific point. Therefore, the MCLA and the group of carriers contend that the Commission must require carriers to submit evidence of actual operations over a gateway before that gateway can be eliminated.

In *Gateway Elimination, supra* 119 M.C.C. at 197, the Commission adopted the following definitional statement. "Where a motor common carrier holds *separate* and *unrestricted* authorities which have a common point of service *to* which a given shipment may be transported under one authority and *from* which the same shipment may be transported under the other the carrier may furnish through service on the shipment under a combination of the authorities provided the authorities are not restricted *through* the common service point or points (the gateway). The import of this statement is that a common point of service becomes a gateway whenever two authorities may be joined together at that point to render a through service and not only upon the actual commencement of operations through that point. This definitional statement clearly speaks in terms of potential as well as actual operations. Therefore, consistent with this longstanding definition of a "gateway", we do not believe that it is necessary to require proof of actual operations through a gateway in order to authorize direct service. Similarly, we do not believe that it is necessary specifically to include the definition of a gateway in the rules.

Nor do we believe that the language of Section 6 can be reasonably interpreted as pertaining only to those gateways over which carriers now actively operate. Congress, in Section 6, directed the Commission to "eliminate gateway restrictions" and it made no distinction between actual and potential operations over a gateway. Also, since Congress did not define the term "gateway restriction" (which is a word of art in the industry), we assume that it was familiar with the common, industry-wide meaning of that term, which, as we discussed above, includes potential operations. Furthermore, Congress has clearly treated the removal of gateway restrictions and circuitous route limitations different from the removal of other types of restrictions. Compare subsection (h)(1)(A) with (h)(1)(B) of 49 U.S.C. 10922. Congress has told us to remove all gateway restrictions within 180 days of enactment of the statute, *i.e.*, by no later than December 28, 1980. In contrast, Congress has required simply that we establish procedures within 180 days to remove other types of restrictions on an application-by-application basis over time, and it established certain criteria to guide our determinations in this regard. Had Congress intended that we require individual carriers to demonstrate active movements through a gateway to qualify that gateway for elimination, it simply would have included gateway restrictions in the application procedures provided for in subsection (h)(1)(B) rather then treating them separately in subsection (h)(1)(A). Clearly, it would be impossible for us to meet our statutory deadline if, as suggested, we were to require carriers to file evidence of existing operations through gateways. Accordingly, we believe that the rules we are adopting in this proceeding are consistent with the provisions of Section 6 of the Act and its legislative history.

Intermediate point service.—In the notice in this proceeding we explained that, except as provided by proposed Section 1042.11(c), regular-route carriers conducting operations under the proposed rules would not be permitted to serve any point not otherwise specifically authorized to be served by them in certificated operating authorities. The United States Department of Transportation (DOT) contends that not allowing carriers to serve intermediate points while conducting operations under the involved rules is inconsistent with the Motor Carrier Act and the legislative history and contradicts our proposals in Ex Parte No. MC-142 (Sub-No. 1), *Removal of Restrictions, Motor Car. of Property*, 132 M.C.C. 114 (1980). DOT maintains that, unless carriers are permitted to serve intermediate points,

they will be discouraged from using more direct routes. Therefore, it recommends that we allow carriers to offer full intermediate point service on any route over which they chose to operate pursuant to the involved rules.

The language of part (A) of Section 6 of the Act refers merely to the removal of those restrictions and limitations which prevent carriers from providing service by way of the most direct routes. We believe that Congress' intent in drafting this section was simply to improve the operating economies and efficiencies of carriers by allowing them to operate over new, more direct routes between points already authorized under their certificates, and not to enable carriers to acquire new service points. To permit maximum operational flexibility, § 1042.11(a) of the rules will allow regular-route motor common carriers to use, without limitation, any route they desire in operating between their authorized service points. These routes need not necessarily be more direct, nor is there any requirement that carriers file for authority to operate over them. Therefore, if carriers were permitted to serve intermediate points while operating under this rule, they would be able, essentially, to commence unlicensed service operations along any route over which they choose to operate. We do not believe that Congress intended such a result when it enacted the Motor Carrier Act of 1980.

Also, we do not believe that the rules being adopted in this proceeding are inconsistent with the rules adopted in Ex Parte No. MC-142 (Sub-No. 1). Under the procedures adopted in that proceeding, carriers will be able to acquire authority to serve all intermediate points on their existing authorized regular service routes. This will enable carriers to perform a more efficient and economical service while operating over their regular routes. The rules being adopted in this proceeding will provide for more efficient overall operations by allowing carriers to use any route they desire in operating between the authorized service points on their regular routes. We emphasize, in this connection, that the rules promulgated here are designed solely to implement certain restriction removal aspects of the Motor Carrier Act. To the extent that carriers may wish to serve points on these more direct routes, they can always apply for the requisite regular-route authority under the substantially eased entry provisions of Section 5 of the Act and our regulations promulgated in Ex Parte 55 (Sub-No. 43).

The "same vehicle" rule.—The Regular Common Carrier Conference, Inc. (RCCC), supports adoption of the proposed rules but questions the intended interpretation of proposed § 1042.11(c). Section 1042.11(c) of the proposed regulations essentially would retain the "25-mile" rule and the "intermediate-point service" provision of the Property Motor Carrier Superhighway Rules which, in most other respects, are rendered superfluous by the proposed rules. RCCC notes that proposed § 1042.11(c) does not contain the "depart from and return to" language of the existing Superhighway Rules. It questions whether, by not including that language, the Commission intends to repudiate the "same vehicle" interpretive ruling made in *Petition for Declaratory Order—Superhwy. Opers.*, 125 M.C.C. 688 (1976). RCCC contends that the "same vehicle" rule imposes insurmountable operational impediments on the normal handling of less-than truckload shipments and forces carriers to perform inefficient and uneconomical operations.

In *Petition for Declaratory Order—Superhwy. Opers., supra,* at 692–93, Division 1 concluded that, in order to comport with the Superhighway Rules, the same vehicle that departs from the underlying regular service route to perform operations pursuant to the rules must also return to the underlying route. We believe that this interpretive ruling involved too literal a reading of the words of the rules (i.e., "depart from and return to" as connoting necessarily a vehicle moving, and not just a route extending, between these points) and not the spirit and intent of the rules. The Superhighway Rules were intended to allow superhighway services but not to make the performance of these services inefficient and uneconomical. Moreover, the "same vehicle" rule is inconsistent with the intent of Section 6 of the Act and the rules being promulgated in this proceeding. Therefore, the rules should be interpreted logically and with common sense reasonably not to compel that the same vehicle departing the service route must return or that the vehicle operating under the rules must depart and return. Accordingly, in this regard the decision in *Petition for Declaratory Order—Superhwy. Opers., supra,* is overruled.

Where a carrier has a superhighway route which otherwise qualifies for use under proposed § 1042.11(c), it may use that route with no obligation that the same vehicle that departs from the service route must return to that route or that vehicles used in operations along the route must in fact depart and return. This leaves to the carrier's discretion the manner in which its vehicles will be used along permissible superhighway routes under the rules. In essence, a carrier may use a permissible superhighway route much like any regular certificated service route operating vehicles over it essentially in the manner the carrier desires.

Contract carriers and regular-route carriers of specified commodities.—In the notice in this proceeding, we requested comments on whether contract carriers and specific commodity carriers should be included in the proposed regular-route rules. We noted that contract carriers and transporters of specific commodities cannot generally be classified appropriately as bona fide regular-route operators. Therefore, we invited these carriers to convert their existing rights to corresponding irregular-route authority. In their comments, DOT and Overnite Transportation Company urge that we include common carriers of specific commodities within the scope of the proposed regular-route rules.

We believe that the conversion by contract carriers and carriers of specified commodities from regular- to irregular-route authority would cure any operational circuity for these carriers, and our invitation, in this regard, still stands. However, we do not believe that Section 6 of the Act can be reasonably interpreted as applying only to regular-route carriers of general commodities. The requirement of section 6 that we eliminate circuitous route limitations imposed on motor common carriers of property, as reasonably interpreted, would extend to carriers of specified as well as general commodities. Accordingly, proposed § 1042.11(a) will be modified by deleting the exclusion pertaining to transporters of specific commodities. However, since Section 6 pertains only to common carriers of property, contract carriers will not be included within the scope of the rules adopted in this proceeding.

Certificates of Registration.—In the notice, we also requested comments on whether the rules should be made applicable to authorities issued by the Commission under Section 10931 of the Act. These are authorities based on initial findings by State regulatory bodies, and authorize operations solely within a single State.

Overnite is of the view that allowing single State operators to use more direct routes is a matter that should be left to the States. RCCC points out that these carriers generally conduct intrastate and interstate operations in conjunction with one another to take advantage of operational efficiencies. Therefore, RCCC questions whether these carriers could feasibly separate the intrastate

and interstate aspects of their operations merely to take advantage of alternative routings that necessarily can apply only to the interstate portion of the traffic being handled.

We are aware, of course, that our jurisdiction in this matter extends only to the interstate portion of these carriers' operations. However, to that extent we see no reason to exclude single State operators from the scope of the rules. The Congressional directive that we eliminate circuitous route limitations pertains to all motor common carriers engaged in interstate or foreign commerce. Therefore, we believe that single State carriers, to the extent of their interstate operations, should be able to take advantage of the involved rules. These carriers, of course, would have to continue conducting the intrastate portion of their operations in a manner consistent with the applicable State laws, as is the case with any carrier combining interstate and intrastate traffic.

Commonly controlled carriers.—ANR Freight System requests that we adopt a specific rule to eliminate routing restrictions for commonly controlled carriers. Affiliated carriers that join their respective authorities do so at interchange points and not at gateways. The elimination of interchange points is clearly beyond the scope of Section 6 of the Act and this proceeding. If a carrier finds that its operations via an interchange at a circuitous point are energy wasteful or inefficient, it may use existing procedures and file an application either for direct single-line authority or for the relocation of the interchange point.

Combining regular and irregular routes.—Georgia Highway Express, Inc., believes that the proposed rules are ambiguous in their treatment of gateways formed by the combination of regular and irregular routes. It points out that proposed § 1042.12, which is the pertinent section governing the elimination of these types of gateways, contains no express reference to regular-route authority and that the heading of that section suggests that it applies only to irregular-route carriers. To avoid confusion, we have modified proposed § 1042.12 expressly to include regular-route authorities.

Redesignated highways provision.—Proposed Section 1042.13 would retain the provision in the current deviation rules which requires a carrier to notify the Commission in case a highway over which it is authorized to operate is given a new designation. Rate Comparison Services, Inc., points out that, unlike the current provision, the proposed section does not expressly exclude irregular-route carriers from the scope of the rule and fails to state the purpose of the rule which is to update the Commission's files and not to reissue a certificate whenever a carrier's route is redesignated. We have modified proposed § 1042.13 to reflect more accurately the scope and purpose of this section.

Other suggested matters.—CRST requests that the Commission reverse its present and proposed policy of prohibiting the tacking of two or more irregular-route authorities, and, at the same time, issue a general rule of construction which would permit direct service where indirect operations may be performed over combinations of irregular routes.

We do not believe that the language of Section 6 of the Act can be logically interpreted as indicating that existing limitations precluding tacking must be eliminated. The term "gateway restriction" is generally employed when referring to the legal necessity that a carrier operate through authorized gateways (i.e., common service points) in joining separate authorities. The term "circuitous route limitations" is more generalized and speaks for itself. Both terms clearly deal with the concept of operational circuity. Where authorities cannot be tacked and, consequently, the carrier cannot render a through service on a given commodity, the potential for operational circuity is obviated insofar as that carrier's system is concerned. Congress, in drafting Section 6 of the Act, clearly sought to eliminate operational circuity in existing authorized services and not to create totally new operations. It is just as plain, however, that Congress intended to foster efficiency in fuel use and operations generally and that elimination of tacking restrictions would serve these ends. Nevertheless, we feel the most appropriate way to remove such restrictions is by filing a new application for direct authority in individual instances or to consolidate existing fragmented certificates to eliminate multiple restrictions.

Seaboard Coast Line Railroad Company and Seacoast Transportation Company, Inc., assert that the proposed rules should be extended to motor carrier affiliates of railroads. The rules being adopted in this proceeding do not expressly exclude these carriers. Motor common carrier affiliates of railroads can take full advantage of these rules unless, of course, their underlying authorities are restricted to the contrary, as is the case with any motor common carrier of property. Restrictions or conditions contained in any carrier's authorities, to the extent they are inconsistent with these rules, govern that carrier's operations until such restrictions or conditions are properly removed. Therefore, motor common carrier affiliates of railroads holding certificates which contain conditions requiring them to perform circuitous operations should avail themselves of the appropriate Commission procedures to have such conditions removed. Finally, Mr. Weiner requests that the Commission abolish Administrative Ruling 84. This matter is clearly beyond the scope of this proceeding.

Interim gateway restrictions.—The regulations adopted in *Gateway Elimination, supra,* allow carriers which have filed applications in good faith under the rules to continue providing service through their gateways until final disposition of their application proceedings. 49 C.F.R. 1065.1(b). A few proceedings instituted under those rules remain to be processed. There are also carriers which have pending gateway elimination applications directly related to finance proceedings under 49 U.S.C. 11344 or 10926, in which the finance transaction has already been consummated. Under these circumstances, carriers now hold *interim*—i.e., *pendente lite*—authority to tack their underlying authorities and operate through gateways to the extent that such operations are the subject of the pending proceedings. In the supplemental notice, we indicated that Section 6 of the Act should govern the removal of these interim gateway restrictions.

DOT and Wheaton Cartage Co., individually, and Cartwright Van Lines, Inc., Lester C. Newton Trucking Co., and Richardson Transfer and Storage Co., Inc., jointly, filed comments generally supporting the removal of interim gateway restrictions pursuant to the provisions of Section 6. The MCLA, on the other hand, opposes our proposed action in this regard.

In response to the supplemental notice, the MCLA reiterates its argument that there is no gateway restriction to be eliminated unless the carrier has been actually operating through the common point of service. There is no need to address further the MCLA's argument in this regard, since we have already discussed the proper definition of a gateway restriction. The MCLA also contends that Congress, in drafting section 6, intended the removal of certain operating restrictions from motor carrier certificates or permits. It argues that, since a grant of temporary authority cannot be considered a certificate or permit, Section 6 does not

govern the elimination of interim gateway restrictions from interim authorities.

Contrary to the MCLA's argument, the underlying authorities on which the involved interim tacking rights are based are not temporary authorities, but permanent certificates. Permanent irregular-route authorities may be tacked with one another, on an interim basis, to the extent that such authorities are the basis of a pending gateway elimination application either filed under the regulations adopted in *Gateway Elimination, supra,* or directly related to a finance proceeding where the finance transaction has already been consummated. Carriers which have such applications pending hold lawful authority to continue providing through service by observing their gateways until final disposition of their application proceedings. Therefore, it is not the underlying authorities that are provisional in nature, but rather it is the right to tack these authorities.

Under the circumstances discussed above, carriers hold lawful interim authority to operate through gateways. Congress, in directing the Commission to eliminate gateway restrictions, made no distinction between "permanent" and "interim" gateways. Also, we do not believe that Congress intended that we impose different standards for the removal of interim, as opposed to permanent, gateway restrictions. Therefore, we believe that section 6 should properly be read to govern the removal of all gateway restrictions. Accordingly, in processing those pending proceedings involving interim gateway restrictions which were not administratively final on July 1, 1980, the Commission will consider all *bona fide* gateway restrictions to be automatically eliminated by virtue of the requirements of Section 6 of the Act.

Finally, contrary to the contention of Cartwright, Newton, and Richardson, we do not believe that it is necessary or practicable to promulgate a specific rule which would govern the elimination of the interim restrictions. Unlike permanent gateway restrictions, the interim restrictions are few in number and all are the subject of pending proceedings. Also, it is necessary that we issue appropriate certificates to these carriers to reflect accurately the scope of their authorized direct operations. Therefore, we will continue to process these individual pending cases and issue the carriers the appropriate operating authority.

Environmental and energy considerations.—The fundamental determination to eliminate gateway restrictions and circuitous route limitations imposed upon motor common carriers of property was made by Congress in the Motor Carrier Act. In implementing that Congressional directive, the environmental and energy impacts of this rulemaking have been examined and found not to be significant. To the degree that there may be environmental or energy effects flowing from our action, we believe that elimination of gateway restrictions and circuitous route limitations will improve, on a nationwide basis, energy efficiency and public safety, and reduce air and noise pollution. Although not deemed significant, the improvements in energy consumption and environmental quality are consistent with established national objectives. The environmental and energy documents which support these conclusions are set forth in Appendix B.

Accordingly, we adopt the rules proposed in the prior Federal Register notice, as set forth in Appendix A.

(49 U.S.C. 10321 and 10922(h)(1)(A) and 5 U.S.C. 553)

By the Commission, Chairman Gaskins, Vice Chairman Gresham, Commissioners Clapp, Trantum, Alexis, and Gilliam. Vice Chairman Greshan concurring in part and dissenting in part with a separate expression. Commissioner Clapp concurring in part and dissenting in part with a separate expression.

James H. Bayne,

Acting Secretary.

Vice Chairman Gresham, concurring in part and dissenting in part:

I disagree with the majority only to the extent that it applies the automatic gateway elimination provisions of Section 6 of the Motor Carrier Act of 1980 to interim tacking authority.

Commissioner Clapp, concurring in part and dissenting in part:

As I noted in my comments to the interim rules, Section 6 of the Motor Carrier Act of 1980 requires the elimination of gateway restrictions from "motor carrier certificates". (H.R. Rep. No. 96-1069 96th Cong. 2nd Sess. 17 (1980)). This means that restrictions must be removed only in the case of certificates which can be joined to form permanent gateways and not where there are so-called "temporary gateways". The temporary tacking allowed under the gateway procedures were provisional and intended only to provide administrative relief during the pendency of proceedings designed to establish *if* there is a gateway and if so whether it should be eliminated. If there is no gateway there is nothing to remove.

Appendix A

49 CFR 1042 is amended as follows:

* * * * *

1. Retitle Part 1042 of Title 49 of the Code of Federal Regulations as "Motor Carrier Routing Regulations."

PART 1042—MOTOR CARRIER ROUTING REGULATIONS

2. Designate current §§ 1042.1 and 1042.2 as a new subpart A entitled "Motor Carriers of Passengers."

Subpart A—Motor Carriers of Passengers

§§ 1042.3 and 1042.4 [Removed]

* * * * *

3. Remove current §§ 1042.3 and 1042.4.

4. Add to part 1042 a new subpart B entitled "Motor Carriers of Property" to read as follows:

Subpart B—Motor Carriers of Property

Sec.
1042.10 General.
1042.11 Elimination of routing restrictions—regular-route carriers.
1042.12 Elimination of gateways—regular-and-irregular-route carriers.
1042.13 Redesignated highways.

Authority: 49 U.S.C. 10321 and 10922(h)(1)(A) and 5 U.S.C. 553.

§ 1042.10 General.

(a) *Scope of this subpart.*—This subpart implements 49 U.S.C. 10922(h)(1)(A) by eliminating gateway restrictions and circuitous route limitations imposed upon motor common carriers of property. It permits direct service where indirect operations may be performed (1) over a single regular route or (2) over combinations of regular routes or irregular routes, or both, through a common service point.

(b) *Separate authorities that may be tacked.*—In the absence of a restriction to the contrary, a motor common carrier of property holding separate authorities which have common service points may join, or "tack," those authorities at the common point, or "gateway," for the purpose of performing through service under the following circumstances:

(1) Regular-route authorities may be tacked with one another.

(2) Regular-route authority may be tacked with irregular-route authority.

(3) Irregular-route authorities may be tacked with one another if the authorities were granted pursuant to applications filed on or before November 23, 1973, and the distance between the points at which service is provided, when measured through the gateway point, is 300 miles or less.

(4) Irregular-route authorities may be tacked with one another if the authorities involved contain a specific provision granting the right to tack.

§ 1042.11 Elimination of routing restrictions—regular-route carriers.

(a) *Regular-route authorities—construction.*—All certificates which, either singly or in combination, authorize the transportation by a motor common carrier of property over (1) a single regular route or (2) over two or more regular routes which can lawfully be tacked at a common service point shall be construed as authorizing transportation between authorized service points over any available route.

(b) *Service at authorized points.*—A common carrier departing from its authorized service routes under paragraph (a) of this section shall continue to serve points authorized to be served on or in connection with its authorized service routes.

(c) *Intermediate point service.*—A common carrier conducting operations under paragraph (a) of this section may serve points located within 1 airline mile of an alternative route it elects to use if all the following conditions are met:

(1) The carrier is authorized to serve all intermediate points (without regard to nominal restrictions) on the underlying service route.

(2) The alternative route involves the use of a superhighway (that is, a limited access highway with split-level crossings).

(3) The alternative superhighway route, including highways connecting the superhighway portion of the route with the carrier's authorized service route, (i) extends in the same general direction as the carrier's authorized service route and (ii) is wholly within 25 airline miles of the carrier's authorized service route.

(4) Service is provided in the same manner as, and subject to any restrictions that apply to, service over the authorized service route.

§ 1042.12 Elimination of gateways—regular- and irregular-route carriers.

A motor common carrier of property holding separate grants of authority (including regular-route authority), one or more of which authorizes transportation over irregular routes, where the authorities have a common service point at which they can lawfully be tacked to perform through service, may perform such through service over any available route.

§ 1042.13 Redesignated highways.

Where a highway over which a regular-route motor common carrier of property is authorized to operate is assigned a new designation, such as a new number, letter, or name, the carrier shall advise the Commission by letter, and shall provide information concerning the new and the old designation, the points between which the highway is redesignated, and each place where the highway is referred to in the carrier's authority. The new designation of the highway will be shown in the carrier's certificate when the Commission has occasion to reissue it.

Note.—Appendix B will not appear in the Code of Federal Regulations.

Appendix B—Environmental Assessment; Elimination of Gateway Restrictions and Circuitous Route Limitations

[Ex Parte No. MC-142]

Summary and conclusion: Elimination of gateway restrictions and circuitous route limitations, as proposed in Ex Parte MC-142, would improve, on a nationwide basis, energy efficiency and public safety, and reduce air and noise pollution. Although not deemed significant, the improvements in energy consumption and environmental quality are consistent with established national objectives.

1.0 *Description of the proposed action*

Section 6 of the Motor Carrier Act of 1980 directs the Interstate Commerce Commission to eliminate gateway restrictions and circuitous route limitations previously imposed upon motor common carriers of property. The proposed rules have been drafted to comply with the legislative directive.

As proposed, the rules would permit "direct service where indirect operations may be performed (1) over a single regular route or (2) over combinations of regular routes or irregular routes, or both, through a common service point." Separate grants of regular route operating authority which have common service points (gateways) may be combined or "tacked" for the purpose of performing direct service. Regular route and irregular route authorities may also be combined. Irregular route authorities may be combined if (1) the authorities were granted prior to November 23, 1973, *and* the distance through the gateway(s) is 300 miles or less, or (2) the authorities contain specific provisions which permit tacking.

2.0 *Environmental impacts*

By encouraging a reduction in motor carrier vehicle miles travelled, the proposed rules will reduce energy consumption, noise pollution, and air pollution, and will improve public safety. Through other actions,[1] the Commission has attempted to counteract potentially adverse impacts which could result if substantial amounts of rail traffic are diverted to motor carriage.

The class of motor carriers affected by the proposed rules includes regular route common carriers which, in the data used in the calculations, are classified as common carrier vehicle-owned or leased without driver. In 1979 trucks in this class logged 12,125,519,000 miles with an average load of 12.59 tons(1).

2.1 *Energy consumption*

The projected potential reduction in energy consumption as a result of the proposed gateway elimination is 76,392,288 gallons annually. This projection is based on an average circuity factor of 1.03362,[2] and an average fuel efficiency ratio of 65 ton-miles per gallon. The projection was derived as follows:

$$\left(12{,}125{,}519{,}000 \text{ miles} - \frac{12{,}125{,}519{,}000}{1.03362}\right) \times (12.59 \text{ tons}) \times \frac{\text{gallon}}{(65 \text{ ton-miles})} = 76{,}392{,}288 \text{ gallons}$$

It is unlikely that carriers will totally eliminate circuity following promulgation of the proposed rules. A more reasonable projection of fuel savings is one half of the potential fuel savings, or 38,196,144 gallons.

Assuming that motor carrier fuel costs are 24 percent of total motor carrier

[1] See e.g., Ex Parte 230 (Sub-No. 5), *Improvement of TOFC/COFC Regulation,* and Ex Parte 282 (Sub-No. 7), *Special Intermodal Authority.*

[2] For this circuity factor a truck must travel 1.03363 times the shortest ground distance. The circuity factor was derived from an empirial observation of one regular route common carrier by Charles River Associates (2).

costs (3), the potential cost savings for regular route motor carriers amounts to approximately 0.78 percent.[3] Again, a more reasonable projection of cost savings is one half of the potential cost savings or 0.39 percent. Although cost savings of this magnitude are not expected to induce any substantial diversion of rail traffic to motor carriage, there may be some modal shift in highly competitive geographical or commodity markets. The rail service most vulnerable to motor carrier diversion is trailer-on-flatcar (TOFC) service.[4]

2.2 *Noise Pollution*

Employing the same vehicle mile and circuity figures used in the energy consumption analysis, the proposed rules could potentially reduce regular route common carrier vehicle miles by approximately 3.25 percent, or 394,400,214 vehicle miles annually. A more reasonable expectation of vehicle mile reduction is one half of the potential reduction, or 197,200,107 vehicle miles annually. Compared with all motor carriers regulated by the ICC (which includes irregular route and contract carriers), the projected savings amount to 1.05 percent of total *vehicle miles*. This projected reduction in vehicle miles will reduce single event noise intrusions by regulated carriers on a nationwide basis by approximately 1 percent. Although some roads may experience an increase in truck traffic, none is expected to have a significant increase in noise intrusions.

Since there is not likely to be any substantial diversion of rail traffic to motor carriage, changes in modal noise emissions are not expected.

2.3 *Air Pollution*

Because of the expected reductions in energy consumption and vehicle miles travelled, a slight reduction in air pollution emissions from regulated carriers on a nationwide basis is expected. Some specific roads and communities may experience additional traffic and a concomitant increase in emissions, but not enough to constrain substantially efforts to meet National Ambient Air Quality Standards in any non-attainment area.[5]

Again, no substantial modal shifts are expected from the gateway elimination. Changes in modal air pollution emissions, therefore, are not expected.

2.4 *Public Safety*

Based upon 1974 accident statistics (4) and based upon projected reductions in vehicle miles, the potential reduction in accidents resulting from the proposed rules is approximately 3518 accidents per year.[6] A more reasonable projection of vehicle accident reduction is one half of the potential reduction, or 1759 accidents per year.[7]

Intermodal shifts in operating mileage and associated changes in modal accident levels are not anticipated.

Sources Used

1. *Trinc's Blue Book of the Trucking Industry, 1980 Edition*, Trinc Transportation Consultants, Washington, D.C., Sept. 1980. Pages S-6 and S-8.

2. *Potential Fuel Conservation Measures by Motor Carriers in the Intercity Freight Market, Vol II*, Charles River Associates, Cambridge, MA, March 1977. Page E-12.

3. "The Energy Crisis and Intermodal Competition", paper presented to the Transportation Research Board, by David S. Paxson, Washington, D.C., January 1980. Page 15.

4. *Reference Manual: Assessment of Environmental Impacts Associated with Railroad Abandonment Proposals*, Interstate Commerce Commission, Washington, D.C., October 1976. Page 6-2.

Statement of Energy Impact—Elimination of Gateway Restriction and Circuitous Route Limitations

[Ex Parte No.]

The rules proposed in Ex parte No. MC-142 would permit regular route common carriers to use less circuitous routes than currently permitted. The net effect of the rules will be a reduction of approximately 398,400,214 vehicle miles and approximately 76,392,288 gallons of fuel each year. This reduction in energy consumption, although insignificant in the context of total yearly transportation fuel consumption, comports with the national goal of energy conservation.

[FR Doc. 80-40456 Filed 12-30-80; 8:45 am]

BILLING CODE 7035-01-M

[3] (1−1/1.03362) × (.24)=.0078.

[4] Ex Parte 230 (Sub-No. 5), *Improvement of TOFC/COFC Regulation*, and Ex Parte 282 (Sub-No. 7), *Special Intermodal Authority*, should encourage use of TOFC service, however, through exemption of the rail portion of TOFC and through relaxed regulations for rail-affiliated motor carriers to gain operating authority for movements prior and subsequent to TOFC carriage.

[5] A non-attainment area is a geographical region which exceeds on a regular basis the National Ambient Air Quality Standard for one or more pollutant.

[6] (394,400,214 vehicle miles) × 8.92 accidents/(million vehicle miles)=3518 accidents/year.

[7] (50 percent) × (3518 accidents/year)=1759 accidents/year.

49 CFR Parts 1002 and 1137

[Ex Parte No. MC-142 (Sub-No. 1)]

Removal of Restrictions From Authorities of Motor Carriers of Property

Decided: December 19, 1980.

AGENCY: Interstate Commerce Commission.

ACTION: Final rules.

SUMMARY: This document contains final rules which implement Section 6 of the Motor Carrier Act of 1980. Section 6 requires the Commission to implement, by regulation, procedures to process expeditiously applications of individual motor carriers of property seeking to remove operating restrictions or to broaden unduly narrow authorizations in their outstanding certificates or permits. The procedures must be effective by December 28, 1980. This proceeding was instituted by a notice of proposed rulemaking served and published on September 16, 1980, at 132 M.C.C. 114, and 45 FR 61326, respectively. Because of the Congressional directive that we have rules in place by December 28, 1980, the final rules will be made effective on that date.

EFFECTIVE DATE: These rules will be effective December 28, 1980.

FOR FURTHER INFORMATION CONTACT: Ombudsman's Office (202) 275-7440; Howell I. Sporn (202) 275-7575; Edward E. Guthrie (202) 275-7691.

SUPPLEMENTARY INFORMATION:

Background

The Motor Carrier Act of 1980, Public Law 96-296, enacted July 1, 1980, added a new subsection (h) to 49 U.S.C. 10922 which, as set forth in the previous notice, directs the Commission to implement regulations to process applications filed by motor carriers of property seeking to remove operating restrictions from their certificates or permits in order to:

(1) broaden reasonably the categories of property authorized by the carrier's certificate or permit;

(2) authorize transportation service to intermediate points on the carrier's route;

(3) provide round trip authority where only one-way authority exists;

(4) eliminate unreasonable or excessively narrow territorial limitations; or

(5) eliminate any other unreasonable restriction that the Commission deems to be wasteful of fuel, inefficient, or contrary to the public interest.

Section 10922 requires that action be taken on the basis of individual applications. Time limitations are set for both the promulgation of final rules and the processing of individual applications. The regulations we adopt must be effective by December 28, 1980, and they must provide for final Commission action within 120 days after the application is filed with the Commission. Only under "extraordinary circumstances" may we extend this time for an additional 90 days.

In granting or denying applications the Commission is to [A] consider, among other things, the impact of the proposed restriction removal upon the consumption of energy resources, potential cost savings and improved efficiency, and the national transportation policy set forth in 101101[a], and [B] give special consideration to providing and maintaining service to small and rural communities and small shippers.

In the previous notice, we proposed rules that would establish expedited procedures for the filing of applications to eliminate restrictions or to broaden unduly narrow authorizations. The rules also included proposed guidelines for the public by listing certain types of authority which the Commission believes may appropriately be reformed under the restriction removal procedures. The Commission invited comments on all aspects of the rules. In addition, we pointed out certain aspects of the proposed rules on which we believed public comment would be particularly helpful.

The final rules we are adopting are set forth in Appendix A. They are substantially similar to the ones proposed. In light of numerous helpful suggestions made by commentors, some modifications and additions have been made to both the application process and our guidelines to the public. The changes are highlighted in the text of this document.

Preliminary Procedural Matters

The rules adopted in this proceeding will be effective on December 28, 1980.

Under Section 553(d)(3) of the Administrative Procedure Act [5 U.S.C. 553(d)(3)], an agency may deviate from the normal 30-day period before rules promulgated by the agency become effective "for good cause found and published in the rules." We conclude that the Congressional mandate for final rules to be in place by December 28, 1980, constitutes good cause to trigger the exception of section 553(d)(3).[1] In any event, the exemption in 5 U.S.C. 553(d)(1) for rules which grant or recognize an exemption or relieve a restriction also applies here. Furthermore, no person will be adversely affected. The regulations neither require any carrier to do nor to refrain from doing anything. Rather, the new regulations serve as an open-ended invitation for motor carriers to take advantage of the Congressional initiative to enable carriers to remove restrictions or to broaden unduly narrow authorizations in outstanding certificates and permits.

The Motor Carrier Lawyers Association (MCLA) requests oral argument. We doubt that oral argument would add anything of substance to the excellent comments we have received. The proposed regulations are essentially procedural and are intended to implement a well understood Congressional policy favorable to the elimination of useless restrictions. We do not perceive any significant policy, legal, or factual matters that could be elucidated through oral presentation. Given these conclusions, as well as the time constraints we face in implementing final rules, we shall deny the request for oral argument.

The MCLA also includes a motion that the Commission renotice this proceeding because we did not include a Statement of Energy Impact and Environmental Impact Statement in our notice of proposed rulemaking. For the reasons set forth in detail later in this decision, we believe the petition is without merit, and it will be denied.

Procedures for Processing Applications

A number of parties object to the procedures we have proposed to process restriction removal applications. These parties generally argue that the proposed rules are violative of the Administrative Procedure Act and deny due process. Their position is that we are required to employ a formal adjudication procedure similar to that used for processing applications for conventional operating rights authority.[2] Several parties assert that the 20-day period for filing comments to individual applications is unreasonably short.

We believe that opponents to our proposed procedure misread our congressional mandate in this area. We affirm the approach to developing these regulations stated in the previous notice. We have, however, made two procedural changes to the rules.[3]

First, at the suggestion of numerous parties, the final rules contain a provision requiring any applicant to furnish a copy of its application package to any interested party upon the payment of a $10.00 fee. Second, to account for that procedural addition, we will extend the time to file comments from the 20-day period we proposed initially to 25 days from the date of publication of the application in the Federal Register. These changes should provide additional notice for potential commentors and better enable those parties to file well-reasoned comments to restriction removal applications.

Our previous notice solicited comments on the question of whether new 49 U.S.C. 10322(b) required Federal Register publication of each restriction removal application, and whether some other form of notice might be legally sufficient and more expeditious. We expressed our concern that Federal Register publication is a time consuming process that will absorb much of the limited time allowed for final disposition of the applications.

The comments we received on this issue almost universally expressed the viewpoint that Federal Register publication is necessary to adequately inform interested parties of restriction removal applications.[4] Although no party has argued that such notice is required by 49 U.S.C. 10322(b), they generally agree that from a practical standpoint there is no other means by which notice can be given to carriers having a potential interest in given applications.

In light of the comments, we will require that each application be published in the Federal Register. In making this decision we do not believe that it is necessary to reach a legal determination as to whether such notice is in fact required by Section 10322(b).

As noted above, several parties argue that the 20-day period (which has been lengthened to 25 days) is inadequate. C & H Transportation Co., Inc., *et al*,

[1] The need for an agency to comply with a legislative directive for expeditious promulgation of regulations has been found by courts to constitute "good cause" under section 553(d)(3). *See e.g., U.S. Steel Corp.* v. *U.S.E.P.A.*, 605 F.2d 283 (7th Cir. 1979); *Clay Broadcasting Corp. of Texas* v. *United States*, 464 F.2d 1313 (5th Cir. 1972), rev'd on other grounds 415 U.S. 336 (1974).

[2] *See* Ex Parte No. 55 (Sub-No. 43), *Rules Governing Applications for Operating Authority*, 45 FR 45534 (1980).

[3] We have also added a new section to the rules—1137.15 Compliance, which is discussed later in this decision.

[4] Two commentors contend that Federal Register publication is not required. American Cyanamid Company asserts that Section 10322(b)(3) requires publication only in cases of original applications for authority. The Aluminum Association, Inc., states that it is only necessary to publish restrictions which the Commission determines to be excessively broad or outside the mandate of the statute.

argue that at least 40 days is necessary. On the other hand, Arrow Truck Lines, Inc., states that 20 days is sufficient time due to the statutory mandate for expeditious treatment of restriction removal applications.

We believe, on balance, that 25 days is an adequate length of time to file comments to individual applications.

As we noted in our previous notice, the congressional demand for speed, and the very tight time limits imposed, mean that we must adopt procedures that will impose difficult burdens on the parties and the Commission.

An important factor to note in this area is that comments are limited by the rules to either (1) the merits of the particular proposal, or (2) whether the proposal should properly be considered under these rules. See § 1137.13 (of the *final* rules). The limited issues to address in these proceedings should not necessitate a period longer than 25 days.

Finally, where parties file comments to an application, the Commission will be left with approximately 60 days to issue a final Commission decision (barring a showing of "extraordinary circumstances"). Given the large volume of applications we expect, this should provide us with no more than the bare minimum time needed to comply with our statutory time limits.

A. The Congressional Mandate

As noted above, the statute mandates that we process restriction removal applications "expeditiously", since the regulations we adopt must provide for final Commission action within 120 days after the application is filed. Only under "extraordinary circumstances" may we extend this time, and then only for an additional 90 days.

To comprehend fully the magnitude of the legislative directive, one must recognize that there are about 21,000 motor carriers of freight holding authority issued by this Commission. These carriers collectively hold approximately 500,000 outstanding certificates and permits. We believe that it is reasonable to assume that a large percentage of these authorities contain restrictions or unreasonably narrow authorizations susceptible respectively to removal or broadening under these rules. Given the new competitive environment in the motor carrier industry, we expect many carriers will take early, and full, advantage of the congressional initiative implemented in this proceeding. Moreover, at the present time we see no desirable manner of staggering the application filings for our administrative convenience in handling the large number of applications we expect.

We believe that the parties opposing our proposed procedures overlook several significant factors. First, there is clear significance in the fact the Congress imposed a time limit of *180 days* for the Commission to issue an *initial decision* in modified procedure cases for operating rights and only *120 days* for *final* Commission actions in restriction removal applications. Hence, if the Congress intended that similar types of issues be explored in these two types of proceedings, it would not have imposed such disparate time limitations.

We believe that the different time periods to a large extent reflect a Congressional appreciation that the two types of cases raise dissimilar issues for ultimate Commission resolution. In conventional licensing, after all, we ordinarily deal with the introduction of new carriers or the extension of existing carriers into new markets, where the issues of new or improved service and competitive impact, and the resultant public benefits or harm, play pivotal roles in the decisionmaking process. Restriction removal cases, although plainly of importance from both a public and private viewpoint, involve a narrower focus. There, we are concerned mainly with issues of improving efficiency and allowing existing operators to provide service in a more economical manner. Quite often (although not necessarily always) they will not involve the injection of a carrier into a new market or the redistribution of competitive relationships.

Our view is supported by Section 10922(h)(2) which states that the regulations we adopt must "provide for notice and the opportunity for interested parties to comment, but need not provide for oral evidentiary hearings." This language describes precisely the procedures normally followed by agencies conducting informal rulemaking under the Administrative Procedure Act, 5 U.S.C. 553. This language also suggests strongly that Congress did not envision these as conventional adversary licensing proceedings, where the decision would depend on the resolution of disputed facts and require the opportunity for the cross-examination of witnesses. Our preliminary determination, which we affirm here, is that the terms of the statute call for informal adjudicatory procedures of the type ordinarily employed in rulemaking proceedings, rather than procedures used in conventional adversary licensing proceedings.

Third, contrary to MCLA's assertion, our procedures are not founded solely upon the provision of the statute. As we stated at page 117 of our previous notice:

In determining what Congress intended to provide in the way of adversarial process in restriction removal cases, there are a number of considerations apart from the words of the statute which we think are pertinent. Congress has clearly expressed its policy to the effect that narrow restrictions and narrowly drawn authorities in the certificates and permits of motor carriers of property are contrary to the public interest. That policy, obviously, does not need to be litigated in each individual case. Furthermore, we will normally be faced in these proceedings not with issues whose resolution would be aided by an adversary proceeding, but with the reformation of certificates issued by the agency itself and within the terms of guidelines to be established by the agency.

B. Applicability of the Administrative Procedure Act

In our previous notice we stated our preliminary conclusion that these proceedings need not be made on the record after an opportunity for hearings, and that the provisions of Sections 554, 556, and 557 of the APA that are pertinent to formal hearings do not apply. We proposed the adoption of simplified and expedited procedures in accordance with that conclusion.

We affirm our determination that the above-cited provisions of the APA are not applicable to our restriction removal application procedures. We do, however, believe that the requirements of Section 555(e) of the APA should be applied.[5]

It is well settled that the APA does not require the adjudicatory procedures of section 554, 556, and 557 in all cases of "adjudication". These sections apply only to "every case of adjudication required by the statute to be determined on the record after opportunity for agency hearing."[6]

As noted above, Section 10922(h)(2) states that the regulations we adopt must "provide for notice and the opportunity for interested parties to

[5] Section 555(e) of the APA, as pertinent, provides: "(e) Prompt notice shall be given of the denial in whole or in part of a written application . . . in connection with any agency proceeding. Except in affirming a prior denial or when the denial is self-explanatory, the notice shall be accompanied by a brief statement of the grounds for denial." This subsection applies to all agency proceedings—formal or informal. *See* Davis, *Administrative Law Treatise*, § 16.00-5 at 391-392 (1970 ed.), citing Administrative Procedure Act, S. Rep. No. 79-248, 79th Cong., 2nd Sess., at 206 (1946).

[6] Davis, *Administrative Law Treatise*, § 16.00-4, pp. 390-391 (1970 Ed.).

comment, but need not provide for oral evidentiary hearings." The parties opposing the proposed procedure have not offered any rational explanation to support their contention that this language should properly be interpreted to require the Commission to provide for a formal adjudication on the record after opportunity for agency hearings. We see no need for a full-scale adversary proceeding.

Section 10922(h)(2) leaves the Commission with a significant amount of discretion in both the procedures to be established and the substantive decisions that can be made under them.

The Supreme Court has stressed that regulatory agencies "should be free to fashion their own rules of procedure and to pursue methods of inquiry capable of permitting them to discharge their multitudinous duties." [7] Also, where an agency fashions its regulations to implement its congressional mandate, courts generally will not interfere with the prerogative of the agency to select the remedy which through rational reasons it deems most appropriate.[8]

As we stated in our previous notice (at 117), "the tight time limits, may, in some instance, even make it impossible to prepare a decision detailing the reasons for the agency's disposition of each and every issue involved.[9] Also, we observed (at 119) that a discussion of all the 10922(h)(2) criteria relevant to a particular application would not be included in decisions on routine restriction removal applications due to time constraints.

We stand by our previous statements and findings will be issued in contested cases. We should emphasize that every decision rendered under these procedures will have a rational basis. We also shall issue decisions briefly explaining the reasons an application was granted or denied in cases where interested parties have filed comments raising material issues.

We believe that our procedures are fully consistent with the congressional mandate. We also believe that no party will be denied due process because our procedures provide all parties with a fair and meaningful opportunity to be heard. On the other hand, the application procedures we adopt will aid the Commission in coping with the statutorily imposed time constraints.

C. Alternative Procedures

Significantly, no party has offered a viable alternative to the procedures we have proposed. The MCLA, for example, has suggested that we provide for an expedited modified procedure, including a provision for an applicant's rebuttal statement, and an appeal of right from an initial decision. Their proposed procedure is premised upon having an application published in the Federal Register within 7 days of its receipt by the Commission. This is simply unrealistic. As we explain in detail in our final rule in Ex Parte No. 55 (Sub-No. 43), through diligent effort we are publishing applications for operating rights authority within 30 days from the date of filing, as compared to the 3- to 6-month period experienced in 1979 and early 1980. Nor can the Commission put all its work on new conventional applications "on hold" to handle restriction removal applications, because of the 180-day satutory time limit imposed by the Act (49 U.S.C. 10322) for issuing an initial decision in modified procedure cases.

The American Trucking Associations, Inc. (ATA), argues that the statute calls for formal adjudication under the APA. However, they basically agree with our proposed procedure, with one major exception. The ATA would add a provision allowing applicants to file a reply to a comment if it could demonstrate that "extraordinary circumstances" exist which would justify the Commission's extending the deadline and permitting a reply. They express their belief that such replies "would not be common" because of carriers' anticipated general reluctance to forego the benefits of restriction removal for up to an additional 90 days. We do not believe that a reply stage would be of significant benefit to the parties, or to the Commission's decisionmaking process. We believe that the "extraordinary circumstances" provisions would be more productively used as a mechanism for parties to file a discretionary appeal.

Proposed Standards for Applying for New Authority

In our previous notice we observed that, since certain restrictions will be removed under the procedures mandated by Section 10922(h)(1)(b), it would be pointless for the Commission to continue to issue, pursuant to applications for new authority, authorities containing objectionable restrictions. To deal with the permissible scope of new authority, we are contemporaneously issuing a final policy statement in Ex Parte No. 55 (Sub-No. 43A), *Acceptable Forms of Requests for Operating Authority*, 45 F.R. 45545 (1980). That proceeding and this one are obviously closely related.[10]

The rules that we have adopted in our restriction removal applications are consistent with the policy statement to assist carriers in applying for new authority.[11]

Substantive Considerations

The Congress has now spoken out clearly as to the undesirability of narrowly drawn authority and unreasonable restrictions. It has given us the responsibility for establishing procedures for eliminating objectionable restrictions.

As noted above, the terms of the statute leave to the Commission broad discretion as to the procedures to be adopted and the substantive decisions made under those procedures. We are to establish procedures for the removal of restrictions against service at intermediate points on the routes of regular-route carriers, and we are to provide round trip authority where only one-way authority exists. 49 U.S.C. 10922(h)(1)(B)(ii) and (i). In all other respects, the statute gives the Commission discretion to determine what restrictions and forms of authority are unduly narrow. We are to "reasonably broaden" commodity authorizations; to eliminate "unreasonable or excessively narrow" territorial limitations; and to eliminate any other "unreasonable" restriction that we deem "wasteful of fuel, inefficient, or contrary to the public interest."

The comments we received largely support our proposed framework for handling substantive decisions under the rules (using "preliminary finding") as a reasonable approach given the time limits under which we must process restriction removal applications. The comments generally support our preliminary determination as to the types of authority which could be broadened and restrictions which could be removed under the rules to be

[7] *F.C.C.* v. *Pottsville Broadcasting Co.*, 309 U.S. 134, 138 (1940); *F.C.C.* v. *Schreiber*, 381 U.S. 279 (1965).

[8] *Condor Operating Co.* v. *Sawhill*, 514 F.2d 351 (Emer. Ct. App. 1975), cert. denied 421 U.S. 970 (1975).

[9] Courts have recognized the inherent difficulties that agencies face in meeting tight statutory deadlines and generally have found agency procedures which deal with time constraints, to be reasonable. *See* e.g., *United States Steel Corp.* v. *United States Environmental Protection Agency*, 605 F.2d 283 (7th Cir. 1979), cert. denied, 100 S.Ct. 710 (1980), —— U.S. —— (1980). *International Harvester Company* v. *Ruckelshaus*, 478 F.2d 615 (D.C. Cir. 1973).

[10] No party takes exception to our position that the final regulations adopted in this proceeding should be consistent with the policy statement in Ex Parte No. 55 (Sub-No. 43A).

[11] Several issues, such as the appropriateness of using the two-digit Standard Transportation Commodity Code (STTC) classification to devise broad general commodity description, are discussed at length in Ex Parte No. 55 (Sub-No. 43A). Accordingly, those issues will be discussed only briefly in this decision.

adopted. Most believe, as we do, that our mandate in Section 10922(h) is to be read broadly, and in concert with the balance of the legislation which recognizes the benefits of competition. However, some commentors take exception to our fundamental view of Section 10922(h), our proposed use of preliminary findings, and the specific provisions of our guidelines. Most commentors, expressing disagreement with our proposed rules, however, limit their opposition to our proposal on one or various aspects of the guidelines for determining applications.

Overall, these comments lead us to confirm our proposal, and we will adopt the rules proposed under Subpart C—Guidelines for Determining Applications, with minor modifications discussed in the body of this decision.

A. Use of Preliminary Findings

Our proposed rules include guidelines (termed "preliminary findings") indicating examples of particular restrictions which the Commission believes should appropriately be removed pursuant to the procedures being adopted. We use the term preliminary findings, because our guidelines would merely provide guidance to the public rather than act as a final determinant of a particular application. We noted in our previous notice that we consider it essential that we provide guidelines because of the time limits under which we must process restriction removal applications.

The MCLA, C & H Transportation, *et al.*, and Arrow Truck Lines, Inc., argue that the Commission is in effect making general findings of public convenience and necessity or public interest in a rulemaking proceeding, thus violating the statutory proscription against master licensing in 49 U.S.C. 10922(b)(3) and 10923(b)(6).

On the other hand, William J. Monheim argues that it is imperative that the Commission provides guidelines and examples for the filing of restriction removal applications. The ATA, while questioning the use of the term "preliminary findings" in light of the proscription against "general findings", expresses its support for our concept. The other comments we received do not dispute our use of guidelines, but rather, comment on specific restrictions to be included or excluded within the guidelines.

The charge that we are engaging in master licensing is unfounded. First, we are not making findings that a grant of the application is consistent with the public convenience and necessity or in the public interest. The proscription against making general findings is applicable only to proceedings under the two above-mentioned sections. It is not applicable to, for example, motor carrier or broker of passenger licensing. Second, in any event, we will be determining applications on a case-by-case basis as required by the statute. As we emphasized in our previous notice, the rules would require the submission by applicants of information related to the Section 10922(h)(2) criteria. Parties would have the opportunity to comment or rebut the preliminary findings as they pertain to an individual application. Master certification, which was the subject of the Congressional concern reflected in section 5(a) of the Motor Carrier Act, was a specific procedure, well understood by the Congress as, for example, reflected in the now-abandoned proceedings in Ex Parte MC-135, adopted by the Commission in the past which, in essence, foreclosed the litigation of certain public interest issues in subsequent application proceedings. As adopted by the Commission in the past, Master Licensing was, in essence, a proceeding which foreclosed the litigation of public convenience and necessity issues in subsequent application proceedings. We are not foreclosing the litigation of any issue in response to individual applications. In prohibiting the Commission from making findings relating to public convenience and necessity based on general findings developed in rulemaking proceedings the Congress did not, in our judgment, intend to restrict our authority to engage in the conventional type of guidance to the public which is a traditional function of administrative agencies.

Overall, we find support for our use of guidelines as a reasonable approach to handle substantive decisions under the regulations. This approach will enable us to meet our statutory mandate to process individual applications in 120 days. Accordingly, it will be retained in the final rules.

The balance of this section of our decision will discuss the substantive decisions to be made under the restriction removal procedures.

B. Fitness Considerations

Our proposed and final § 1137.10(b), which lists the information that must accompany the application, does not require the submission of information concerning the applicant's fitness or ability to receive a grant of authority. We do, however, conclude that a recent finding by the Commission of a carrier's unfitness on safety grounds will be considered as a factor in granting or denying that carrier's restriction removal applications. The issue can be raised by commentors or the Commission on its own initiative.

We stated in our previous notice at 120:

> As we read the new legislation, a finding of fitness is not a prerequisite to a grant of an application seeking restriction removal under these procedures. Applicants have previously been found fit to receive the certificates or permits which they seek to reform, and a further fitness finding does not appear necessary in the absence of a specific statutory requirement.

We did, however, note that Section 10922(h)(2) requires the Commission to consider several criteria in granting or denying applications, one of which is the transportation policy set forth in section 10101(a)(7). That policy includes improving and maintaining a sound and safe motor carrier system. Accordingly, we sought comments on whether a recent finding of a carrier's unfitness on safety grounds should be considered as a factor in granting or denying that carrier's restriction removal application.[12]

The comments we received on the issue of fitness generally take one of three positions. Several parties [13] argue that the same fitness finding must be made under these regulations as those required under ordinary licensing proceedings for new operating rights. The New Orleans Traffic and Transportation Bureau takes the position that we should require evidence of a carrier's financial ability to conduct any broadened authority it seeks under these rules. Finally, several parties [14] argue that, while the Commission is not required to make a fitness finding in each application for restriction removal, a carrier's unfitness on safety grounds should be considered as one factor in determining applications filed under these regulations. We find ourselves in agreement with this last position.[15]

We base our decision that no fitness findings are required principally on the two significant factors set forth in our previous notice, and cited above. No party provides a convincing argument as to why we should ignore the lack of a statutory requirement for a fitness finding, and the fact that all applicants

[12] In a concurring opinion, Commissioner Clapp requested comments on "whether more than just a safety analysis should be required."

[13] The MCLA, Nelson & Harding, Celeryvale Transport *et al.*, and C & H Transportation Co., Inc., *et al.*

[14] The ATA, The Teamsters Union, American Cyanamid Company, Arrow Truck Lines, Inc., and William J. Monheim.

[15] We do, however, reject the ATA's contention that prior or pending findings of unfitness based on safety factors should effect a blanket disqualification of a carrier from receiving the benefits otherwise available under Section 10922(h).

under these rules will have been found fit to operate in the Commission proceeding in which they obtained their underlying operating rights, and make a fitness finding a prerequisite for a grant of a restriction removal application.

We are persuaded, however, that there might be circumstances where a carrier's unfitness on safety grounds should bar it from removing restrictions or expanding authority. Parties will be able to raise the issue with specific, rather than general, statements concerning the particular restrictions removal application. As alluded to earlier, the Commission could also raise the issue on its own initiative.

In this area, we observe that, while our directive to maintain a safe and sound motor carrier system is included in the National Transportation Policy (49 U.S.C. 10101(a)(7)), that policy also includes other relevant directives such as to allow the most productive use of equipment and energy resources. These other directives, as well as the other factors we are to consider in rendering our decisions in restriction removal cases, might, in certain cases, outweigh a carrier's past safety violations.

Finally, we can see no reason to require an applicant under these regulations to submit financial information on its ability to conduct any expanded authority sought, as the New Orleans Traffic and Transportation Bureau proposes. As we have stated, a fitness finding (safety or financial) is not required by the statute. Moreover, imposing such a requirement here would run contrary to our decision in adopting final rules in Ex Parte No. 55 (Sub-No. 43), to delete the requirement that applicants for new operating rights file financial information concerning their ability to conduct the operations they propose. As we note in that proceeding, bankruptcy laws and the insurance requirements imposed on carriers serve as adequate protection to the public in cases where existing carriers go out of business.

C. Commodity Descriptions

We proposed in § 1137.21(b) to allow carriers holding authority framed in terms of one or a limited class of commodities, to replace that description with a broad, generic one. To accomplish this, we proposed that carriers be given the choice of replacing unduly narrow authority with (1) the appropriate two-digit STCC level; (2) a commodity description contained in *Descriptions in Motor Carrier Certificates*, 61 M.C.C. 209 (1952) and 766 (1953); or (3) a broad class description (we provided several examples). We sought comments concerning the possible use of the STCC in reforming narrowly drawn authorizations.

A number of parties which had expressed disagreement with the proposal in Ex Parte No. 55 (Sub-No. 43A) to use STCC for all future requests for new authority, reiterated their position in this proceeding.

In our final policy statement in Ex Parte No. 55 (Sub-No. 43A), we have concluded that the STCC approach should not be adopted as an exclusive and comprehensive listing of permissible descriptions for all future operating rights applications. Rather, the STCC, as modified in that proceeding, will be used as an indication of the kinds of broad, generic commodity descriptions we find generally acceptable. Any other description proposed by a carrier will be considered acceptable if it is as broad or broader than STCC groupings.

We believe that our proposal in this proceeding regarding broadening of existing commodity authorizations is perfectly consistent with our conclusions as to the proper breadth of future commodity descriptions. Accordingly, we will affirm our preliminary determination to give carriers seeking broadening of their commodity authorizations the option of choosing an applicable classification from one of the three categories described above. Frankly, we do not believe our determination in this area of restriction removal to be contentious. No carrier will be forced to reform its commodity authority. If such a decision is made, however, it makes little sense of allow a carrier to seek a commodity classification which is narrower than the kinds of descriptions found in the three sources we have discussed.

Section 1137.21(a) concerns the exceptions in outstanding general commodities authority. Grants of general commodities authority have in the past consistently excepted certain commodities.[16] We proposed that all of the past commonly imposed exceptions to such authority, except household goods and classes A and B explosives, be susceptible to removal under the procedure to be adopted.

We have decided that our final rule will provide that all exceptions, except classes A and B explosives, will be subject to removal under these procedures. This is consistent with our decision in Ex Parte No. 55 (Sub-No. 43A), concerning future grants of general commodities authority.

Steere Tank Lines opposes our proposal to include the "in bulk" exception. It argues that general commodities carriers have not in the past provided tank-truck service and have no desire to do so.

We cannot agree with Steere's proposal. We believe that its request runs contrary to the National Transportation Policy to encourage competition. While it may be true that many general commodities carriers do not operate tank trailers, nothing is gained by limiting a carrier's ability to expand its operations, if it chooses to do so. To limit authorities merely because a carrier does not already have special equipment would only tend to entrench existing carriers contrary to the new Act.

Regarding household goods, we were concerned that the pending Household Goods Act of 1980, would establish an exclusive licensing category for household goods. That Act, as finally passed, did not set up separate licensing standards for households goods. Since there was no other reason to exclude household goods from the other exceptions which will be subject to removal under these rules, we will not do so.

Classes A and B explosives will not be subject to removal because of safety reasons.

Part (c) of Section 1137.21 involves commodities dealt in by a particular business. In our previous notice, we solicited comments on our preliminary determination that the description "such commodities as are dealt in by" a particular industry is to be considered acceptably broad authority, and thus not susceptible to broadening under these rules. This is because the holder of such authority can transport a broad range of commodities which satisfies the needs of the relevant shipping public and the carrier. All the comments which addressed this issue were in agreement with our position. Accordingly, we affirm our treatment of this issue. Of course, a carrier holding such authority can use the normal application procedures to broaden its authority.

D. Round-Trip Service

As we have noted, one of the two explicit instructions we have in this area is to "provide round-trip authority where only one-way authority exists." 49 U.S.C. 10922(h)(1)(B)(iii). In discussing this provision in our previous notice, we expressed our concern that granting carriers "mirror image" authority would frequently have little practical effect in achieving two-way loaded movements.

[16] These included commodities in bulk, those requiring special equipment, commodities of unusual value, classes A and B explosives, and household goods as defined by the Commission.

We suggested the possibility that carriers requesting backhaul authority under the rules would receive authority (if so requested) to transport materials, equipment, and supplies used in the manufacture, sale, and distribution of the already authorized outbound commodities in addition to those outbound commodities. We solicited comments on the methods for expanding the commodity description beyond the mere mirror image.

Many commentors concur with our assessment that granting carriers "mirror image" authority probably would do little to further the goals of Section 10922(h). Most parties agree with our proposal to include complementary return authority as express authority.[17]

The ATA suggests that all items contained in the descriptive language "materials, equipment, and supplies . . ." be considered as being subsumed within the scope of a related generic classification, thereby making express language unnecessary. We agree with this concept and believe it to be better than our above-described proposal. The final rules will state that complementary authority (e.g. materials, equipment, and supplies) will be included as implied authority when a carrier requires round-trip authority, based on our findings of need for the authority expressly granted.

This approach is consistent with decision in Ex Parte No. 55 (Sub-No. 43A) that materials, equipment, and supplies will now be included as implied authority in future grants of authority. This will allow carriers to provide a complete service, with the ability to transport all items used in the manufacture or distribution of a group of commodities, as well as the commodity itself. Also, inclusion of these commodities within a class of commodities is consistent with Congress' expressed interest in facilitating round-trip authority and eliminating fuel inefficient operations.[19]

To summarize, where a carrier holds one-way authority, it can obtain round-trip authority under these rules. The carrier can either maintain its present authority description or expand its commodity in the manner described in Section 1137.21.[20]

Implied in the commodity description is authority to transport the already authorized commodity (or the exapnded authority) in addition to materials, equipment, and supplies, in *both directions.*

E. Intermediate Point Service

Two issues have been raised in the comments in connection with our proposed Section 1137.22—Intermediate Point Service. First, Woodline Motor Freight, Inc., takes the position that, where an application involves the removal of restrictions against service to intermediate points, the Commission *must* permit the removal of such restriction. Second, Allied Chemical Corporation proposed that we grant intermediate point authority under these procedures in connection with irregular route authority.

Section 1137.22 will be adopted as proposed. However, we believe it necessary to discuss the issues raised in this area.

As to the first issue, we disagree with Woodline's interpretation of the statute. As we have noted, the statute gives us specific direction in two substantive areas. We are to establish procedures for the removal of restrictions against service on the routes of regular-route carriers, and we are to provide round-trip authority where only one-way authority exists. 49 U.S.C. 10922(h)(1)(B) (ii) and (iii). However, nothing in Section 10922(h)(2) suggests that the Commission is to have no discretion to deny an application seeking the removal of restrictions against service to intermediate points, as Woodline contends. To the contrary, Section 10922(h)(2) uses the language, "In granting or denying applications under paragraph (1)(B) of this subsection, the Commission shall * * *." Paragraph (1)(B) includes applications concerning intermediate point authority. Accordingly, we conclude that applications involving intermediate point authority must be treated identically to the other categories in section 10922(h)(1)(B).

As to the second issue, policy consideration aside, we believe that it would be exceeding our mandate to grant intermediate point authority in connection with irregular-route authority. Allied Chemical correctly observes that we have consistently ruled that intermediate points are not granted for irregular-route authority. More importantly, we are convinced that the language used by the Congress that we implement regulations to "authorize transportation or service to intermediate points on the *carrier's routes*" (emphasis added) read in conjunction with the fact that the Commission does not authorize "routes" to irregular route carriers, is dispositive of the intent of Congress in the area of intermediate point authority.

F. Territorial Descriptions

Our preliminary determination, expressed in § 1137.24(a), was that authorizations to serve a territory less extensive than a county would be considered excessively narrow. Our proposed rules stated that use of these procedures would be normally appropriate for applications seeking the expansion of territorial authority to include all points in the county in which the authorized service point (including any portion of the commercial zone of an authorized point) or other limited service area is located. Comments were sought on the possibility of allowing applicants, at their discretion, to seek expansion of smaller authorities to embrace a given city and points in its commercial zone, as an alternative to a county.

None of the comments express any serious reservations with our use of county-wide authority as the basic method for expanding excessively narrow territorial descriptions. Nor do we see any problems that have been raised concerning our definition of "county" in Section 1137.3(a). No alternative has been suggested to the use of counties for this purpose. Furthermore, we have decided in Ex Parte No. 55 (Sub-No. 43A) that countywide authority will generally be considered as the minimum territorial description which will be acceptable for future applications.

No party specifically opposes our proposal to allow applicants the option of choosing authority to embrace a city, as an alternative to a county. Accordingly, we conclude that, where a service point is within both a county and a city, we will allow the applicant, at its discretion, to apply for the city description (which includes the implied authority of points in its commercial zone). We recognize that the city description can sometimes produce a broader grant of authority than would county-wide authority, and we believe that this result would be fully consistent with the legislative intent in allowing carriers holding narrow territorial authorities to expand their authorities.

Southern Freight Lines, *et al.*, raises the issue of whether a carrier authorized to serve various counties in a State can use these procedures to obtain statewide authority. We believe that such an expansion of authority is outside the scope of restrictions removal. Carriers in such a position are

[17] The Department of Transportation (D.O.T.) suggests several alternative approaches to expand backhaul authority, such as allowing carriers to pick up shipments anywhere within a certain radius of the terminating point of any fronthaul or deliver backhauls to points within a certain radius of the orginating point of any fronthaul.

[19] H. Rept. 96-1069, 69th Cong., 2d Sess. 17-18 (1980).

[20] This responds to the question raised by the D.O.T. as to whether authority could be expanded in conjunction with obtaining round-trip authority under our rules.

encouraged to use the normal application procedures to expand and consolidate their authorities.

In our previous notice we raised the issue of how we should handle those instances where a carrier has authority to serve a broad territory limited to service at the facilities of a specified company whose locations are not stated in the certificate. Our preliminary conclusion was that we would not consider such limitations excessively narrow and, therefore, not appropriate for restriction removal. We noted in this regard, that removal of such limitations could require an extensive fact-finding effort which may be impossible given the limited time we have to process restriction removal applications.

The comments we received support our proposed treatment of this type of territorial limitation, and we will adopt our proposed rule. Carriers holding authorities with such limitations can expand their authorities through the normal application procedures.

We note that D.O.T. suggests that we treat carriers with such authority in a manner analogous to procedures for contract carriers in § 1137.26. It suggests that we grant these carriers authority to serve the named shipper between points in the United States. We believe the proper method to accomplish this is for the carrier to request contract carrier authority, which, if granted, would result in a territorially unrestricted authority.

Finally, no serious argument has been made against our proposal in subsection (b) that carriers holding authorities limited to a particular business' facilities at named points be able to use the regulations to offer broader authority to the same extent as other authority containing unreasonable or excessively narrow territorial limitations. We will, accordingly, maintain this provision in our final rules.

G. Limited-Term Authority

Under Section 1137.22 we proposed allowing carriers holding limited-term authority to participate fully in the restrictions removal program. Any limited-term authority modified under this program would be limited to the same term imposed in the original authority. Carriers would not be able to use these rules to eliminate the limited-term conditions.

We will maintain this provision in the final rules.

The MCLA states that only carriers holding authority limited because of the nature of the commodities they transport (generally explosives or hazardous commodities) be allowed to participate in the restriction removal program. They argue that otherwise we may allow unsafe carriers to expand their operations. Of course, the type of limited-term authorities the MCLA describes is by far the most prevalent. However, we believe that a better view is to allow all carriers to file restriction removal applications. First, as we noted above in our discussion of fitness issues, safety issues can be raised by commentors or by the Commission on its own initiative. Second, carriers holding limited-term authority are already operating and there is a mechanism in place for the Commission to evaluate such carriers' performance records under their original and any reformed authority. A grant of a restriction removal application may allow them to operate more efficiently and economically.

H. Contract Carriers

We have reworded the text of § 1137.26 for purposes of clarity. The final section on contract carriers will clearly indicate that a contract carrier holding a permit to serve a single named shipper, number of shippers, or a class of shippers can use these rules to obtain authority to serve those shippers "between points in the United States." Also, to eliminate apparent confusion, the final section will state that contract carriers may use these procedures to the same extent as common carriers to eliminate restrictions or to broaden unduly narrow commodity authorizations.

In Ex Parte No. 55 (Sub-No. 43A) we have observed that the proper territorial request for a contract carrier permit is "between points in the United States." We reached this conclusion, because the Commission by law cannot limit the territorial scope of contract carrier operations. As stated above, we will affirm our proposal to give contract carriers holding outstanding permits the same opportunity to obtain nationwide authority.

Brink's Inc., a contract carrier, has requested that we allow contract carriers authorized to serve a single named shipper to use these rules to expand their authority to a class of shippers. We must conclude that these procedures are not an appropriate vehicle to broaden the number of shippers a contract carrier can serve. Such applications would in many instances require an extensive fact-finding effort concerning whether there is a need for service, which may be impossible given the statutory time limits imposed on applications filed under the restriction removal procedures. Contract carriers can, of course, expand their authority in such a manner through the final expedited application procedures promulgated in Ex Parte No. 55 (Sub-No. 43).

I. Miscellaneous Restrictions

In § 1137.25 of the proposed rules we described "miscellaneous" restrictions which we believed would be susceptible to removal under the restrictions removal program. We solicited comments on other restrictions which should be included in this list.

Our final § 1137.25 will adopt the four types [20] of restrictions we proposed, with some changes made in light of the comments we received. We have also added two types—freight forwarder bills of lading restrictions and territorial service limitations on irregular route authority. These are discussed later in this decision. Based on the comments we received, and our preliminary determination, we will not include authority limited to transportation services for the United States Government because such authority is appropriately broad.

1. In subsection (1), we included restriction which "require or preclude the use of a specific type of equipment, such as 'in tank trailers' or 'except in dump or hopper type equipment'."

A number of parties [21] basically argue that equipment restrictions are not anticompetitive, but rather reflect the "natural" divisions present in the motor carrier industry.

We believe that equipment restrictions generally prevent carriers from expanding their operations to provide an efficient and competitive service to the public. The only reason we can see for not permitting carriers to remove such restrictions under normal circumstances would be to limit competition by isolating various types of specialized carriers. As we have noted earlier in this decision, the maintenance of the "status quo", or limiting future competition, are not valid reasons for excluding unreasonable restrictions from removal in this program. Furthermore, we have decided in Ex Parte No. 55 (Sub-No. 43A) that equipment restrictions will not be imposed in future application proceedings.

2. In subsection (2), we included restrictions which "prevent a common carrier from participating in joint-line service with another carrier or from handling traffic having a prior or subsequent movement by a specified

[20] The fifth type was "restrictions which the Commission found to be inappropriate and has refused to impose on another proceeding.

[21] These include the National Tank Truck Carriers, Inc., the ATA, the MCLA, the New Orleans Traffic and Transportation Bureau, and William J. Monheim.

mode of transportation." The proposal was based on our belief that such restrictions were generally wasteful of fuel, inefficient, contrary to the public interest, and frustrating to Congressional efforts at encouraging intermodalism.

Several issues have been raised which are relevant to this subsection. Georgia Highway Express (GHE) questions whether the prior or subsequent movement aspect of our subsection could be interpreted to cover only restrictions which *prevent* a carrier from handling traffic having a prior or subsequent movement by rail, air, or water (commonly referred to as ex-rail, ex-air, and ex-water transportation).

GHE requests the Commission explicity to sanction in this subsection applications seeking to remove restrictions limiting the carriers to ex-rail traffice. GHE desires to remove such a restriction so that it may perform joint-line service with other motor carriers. The Air Freight Motor Carriers Conference (AFMCC) wants to be certain that ex-air restrictions are embraced in subsection (a).[22]

GHE and AFMCC basically argue that enabling the removal of intermodal restrictions generally would have a favorable impact on fuel consumption, would yield operating efficiencies, and would be in the public interest.

We agree that authorities which restrict traffice to, or against, movement with a specified mode of transportation are objectionable and should be embraced in this subsection. We also agree that ex-air motor traffic should be included. This is also in keeping with the mandate of the National Transportation Policy that the Commission encourage intermodal transportation. See 49 U.S.C. 10101(a)(7)(H). These matters are reflected in our final rules.

The second issue concerns the ability of railroad-controlled motor carriers to use the restriction removal program. Seaboard Coast Line Railroad Company and Seacoast Transportation Company, its wholly owned motor carrier subsidiary submitted a joint comment. They urge that in order to promote intermodal competition according to the amended National Transportation Policy, it is necessary to treat railroad-controlled motor carriers the same as independent motor carriers.

[22] AFMCCC notes that, while 49 U.S.C. 10527(b)(8)(B) exempts almost all ex-air motor traffice from Commission jurisdiction, ex-air traffice performed in conjunction with a foreign air carrier that has not reached an appropriate agreement with the United States still requires specific operating authority from the Commission.

We believe that the issue of whether restrictions imposed pursuant to Section 11344(c) should be removable under the restriction removal program are better considered in a separate proceeding. Under the statutory proviso of 49 U.S.C. 11344(c)[23] where railroads seek to consolidate or merge with, or acquire control of a motor carrier, such a transaction cannot be approved unless the Commission finds that it will be consistent with the public interest, enabling the rail carrier to use the motor services in its operations to public advantage without unreasonably restraining competition. In implementing this statutory provision, the Commission has in the past required the imposition of special restrictions[24] on grants of motor carrier authority to a railroad or railroad affiliate so as functionally, as well as geographically, to limit the motor carrier service to that auxillary of or supplementary to rail service. We are examining these matters separately.[25]

3. In subsection (3), we proposed including restrictions which "impose size or weight limitations on a specified commodity or limited class of commodities." We will adopt this provision in the final rule. The MCLA has asked for a clarification of this provision. To clarify our rule, size or weight restrictions which are descriptive and contain the sole limitations on the commodity that may be transported, such as "shipments weighing less than 100 pounds" or the normal "size and weight" description of heavy haulers, are not considered objectionable and will not be removable under these rules. On the other hand, limitations on the size of individual articles or a class of commodities to be shipped will be covered by subsection (3).

4. Subsection (4), of the proposed § 1137.25 concerned outstanding authorities which are restricted to (1) the transportation of traffic orginating at or destined to specific points in Canada, or Mexico, and (2) specific point of entry on the international boundary line between the United States and the two neighboring countries.

We observed in our previous notice that we had issued a revised policy statement advising the public that the Commission would not impose such foreign commerce restrictions in the future and that such restrictions in authority issued after March 3, 1975, were null and void. Also, we noted that this policy statement was found unlawful in *American Bus Association v. ICC*, 627 F.2d 525 (D.C. Cir. 1980) due solely to the Commission's failure to provide notice and take comment pursuant to 5 U.S.C. 553.

The Trucking Association of Quebec, *et al.*, argues that the requirement for a carrier to specify the port of entry to be used is not a restriction, but rather, the functional equivalent of a grant of authority to a named origin or destination point in the United States. It argues that the naming of specific ports of entry does not impede the free flow of commerce.

We disagree and we will affirm our preliminary determination that the above-described foreign commerce restrictions impede the free flow of international trade, cause operating efficiencies, and are contrary to the public interest. Accordingly, we will retain this provision in Section 1137.25.

The ATA asks that we clarify the practical effect of removing ports-of-entry restrictions through these regulations. We will attempt to do so. Where a certificate describes a specific port of entry, or ports of entry along the international boundary line within a State, and one restriction as removed, the certificate will authorize service to and from all ports of entry in the involved State. This will allow the carrier to use any convenient port of entry in the State.

5. As we have mentioned above, we will include a new subsection in § 1137.25 to include freight forwarder bills of lading restrictions as a type of restriction which could normally be removed under the restriction removal program. We solicited comments on this proposal in our previous notice.

Midwest Haulers, Inc., a motor carrier of general commodities, specializing in the transportation of traffic for freight forwarders, supports our proposal. Midwest Haulers contends that the involved restriction contributes to wasteful utilization and operating inefficency. Because the restriction prevents it from moving non-forwarder traffic in its authorized traffic lane, which it could otherwise handle with its equipment, the restriction stifles its ability to meet the needs of shippers and make more productive use of its equipment.

Brannan Systems, Inc., *et al.*, argues that there is nothing to show or suggest that such limitations are unreasonable restrictions which are wasteful of fuel,

[23] Former Section 5(2)(b) of the Interstate Commerce Act.

[24] These restrictions include "key points," "auxiliary and supplementary," and "interchange" restrictions.

[25] Insofar as the carriers concern centers on intermodal traffic, we note that two pending rulemaking proceedings involve intermodal issues. See Ex Parte No. 230 (Sub-No. 5), *Improvement of TOFC/COFC Regulation*, 45 FR 79123 (Nov. 28, 1980); and Ex Parte No. 287 (Sub-No. 7), *Special Intermodal Authority*, 45 FR 77032 (Nov. 21, 1980), and 45 Fr 79488 (Dec. 1, 1980).

inefficient, or contrary to the public interest. It states that there is no legislative history to suggest that Congress intended the elimination of this type of restriction.

We conclude that freight forwarder bills of lading restrictions fall within the ambit of Congress' intent concerning restriction removal. We are convinced that these restrictions are unreasonable because they result in operations that are wasteful of fuel, inefficient, and contrary to the public interest. The only reason for not allowing carriers to remove this restriction under normal circumstances would be to protect existing general freight carriers from competition, which would be contrary to the National Transportation Policy. We also note that the Commission has in the past rejected imposition of bill of lading restrictions. See *North Star Transport, Inc., (Extension—Lumber*, 128 M.C.C. 803 (1978), aff'd mem. sub nom. International Transport, Inc. v. *I.C.C.*, 607 F.2d 493 (D.C. Cir. 1979).

6. In response to our request for comments on possible additions to § 1137.25, Mercury Motor Express, Inc., raises the issue of service restrictions imposed on irregular-route authority.

Mercury Motor observes that the Commission has granted irregular-route authority between areas or between States restricted to movement through a named point, area, or State. For example, "between points in Tennessee, on the one hand, and, on the other, points in Florida . . . limited to the transportation of traffic moving from, to, or through points in North Carolina."

This type of restriction serves to limit the service that the carrier can offer the public, and normally will result in operating inefficiencies and excessive fuel consumption. As such, we conclude that the described type of restriction should be included in § 1137.25, as a restriction which could normally be removed under the regulations.

7. As we noted in our previous notice, our guidelines are not intended to be an all-inclusive list of the restrictions which can be removed under the procedures we are adopting. Accordingly, we will include in our final rules [at 1137.25(7)] our propose subsection (5), restrictions which "the Commission has found inappropriate and has refused to impose in another proceeding."

Miscellaneous Matters

A. Repeat Applications

Section 1137.10 has been amended to specify that a carrier may reform authority (granted pursuant to applications filed before December 28, 1980), more than once under these rules. We see no reason to give a carrier only "one bite of the apple". However, we strongly encourage carriers carefully to analyze their authority and their needs before filing a restriction removal application. Also, a carrier should not file a request to have a certificate or permit reformed until the prior request related to that authority has been processed by the Commission. Given the time limits under which we must operate, this should not cause any undue hardship.

B. Compliance

We have added a new § 1137.15 to the rules dealing with compliance. The purpose of the addition is to indicate that where a restriction removal application is granted, a new certificate or permit will be issued without prior verification of the normal compliance requirements (rates, process agents, and insurance). Before commencing operations under the newly issued authority, a carrier must, of course, comply with the pertinent statutory and regulatory requirements. This is the same procedure which we have adopted in Ex Parte No. 55 (Sub-No. 43) at 45 FR 80109 (1980).

The ATA suggests that in cases where no party files comments to a restriction removal application, a carrier should be allowed to begin operating immediately at the close of the 20th day after the due date for filing comments. They express their concern that in the past substantial delays have been experienced by carriers while awaiting issuance of a certificate. Since we have no experience under the new law and are unable to predict the number of filings, we share their concern. However, we believe that the best course is to follow the procedure we have outlined. Long delays have occurred in the past largely as the result of the Commission awaiting verification of carriers' compliance with applicable requirements. Under our procedure, we expect that in uncontested proceedings, reformed authority could be issued shortly following the conclusion of the 25 day comment period. However, we stand ready to reexamine our procedures should an inordinate number of filings cause lengthy delays.

C. Filing Fees

A number of parties have suggested that we eliminate or reduce the filing fee for restriction removal applications. One commentor, the Aluminum Association, Inc., suggests that we have a sliding scale of filing fees tied into the class of carrier filing the application. The question of filing fees has complex policy implications which should be answered on a separate basis. For the time being, we will retain the $350 filing fee in our final rules.

D. Application Procedures

As we have stated in the past, carriers seeking to reform their authorities by consolidating a number of fragmented authorities into one or more certificates and simultaneously to remove restrictions are encouraged to use the expedited application procedures promulgated in Ex Parte No. 55 (Sub-No. 43). See 45 FR 45535–6 (1980). Numerous carriers have filed applications to reform their authorities in such a manner.

Energy and Environmental Considerations

In our previous notice we stated that we did not believe that adoption of the proposed rules would have any significant impact upon the quality of the human environment. We also stated that we anticipated that their adoption would improve operating efficiencies and reduce mileage, thu contributing to the conservation of energy resources. We solicited comments on the issues of environmental and energy considerations.

We affirm our previous statements on both issues. We received only one substantive comment on these issues. D.O.T. cites a report issued by that Agency [26] which found that if the restrictions involved in this proceeding and in Ex Parte No. MC–142 were removed, annual fuel savings of at least 30 to 60 million gallons could be anticipated.

Our Office of Policy and Analysis—Energy and Environmental Branch, has prepared an Environmental Assessment and Statement of Energy Impact, which are found in Appendix B of this document. The first statement concludes that the quality of the human environment will not be affected significantly by this action. In fact, the environmental impacts (including energy consumption) of the proposed rules is expected to be slightly beneficial. The second statement concludes that, by permitting a slight improvement in load factors and a reduction of empty mileage, the proposed rules are expected to induce a modest reduction in energy consumption.

Three factors figure significantly in our consideration of the environmental implications of our action. First, as noted above, these rules are essentially procedural and are intended to

[26] Final report of D.O.T. entitled "Potential Fuel Conservation From Regulatory Reform of the Trucking Industry" (July 1980).

implement a Congressional directive that we are to establish procedures to allow carriers to eliminate certain restrictions and to broaden unduly narrow authority. Second, the Congressional mandate resulted to a large extent from finding that many restrictions imposed by the Commission in the past often result in operational inefficiencies and wasted fuel.[27] Third, these regulations provide for the proper consideration of environmental and energy issues in individual restriction removal applications. These issues can be raised by the parties to a proceeding or by the Commission on its own initiative.

We cannot agree with the MCLA's contention that the Commission's regulations specifically mandate publication of environmental and energy statements in a notice of proposed rulemaking. We are convinced that our consideration of environmental and energy implications of the regulations being adopted is in full compliance with the National Environmental Policy Act of 1969, the Energy Policy and Conservation Act, and the Commission's regulations implementing these Acts (49 C.F.R. Parts 1108 and 1106).

Alternative Procedures

In establishing these regulations for the elimination of restrictions, we emphasize that carriers continue to have available the conventional application procedures authorized in Ex Parte 55 (Sub-No. 43). The statutory deadline for Commission decisions with respect to those applications is only 180 days and, in fact, the Commission is processing unopposed applications in approximately 90 days, and opposed applications in less than the statutory 180 days. As a consequence, applicants can receive prompt attention to their applications even in cases which do not qualify under the special provisions applicable to restriction removal. Indeed, in close cases, we encourage applicants to proceed under the conventional certification procedures rather than litigate the metes and bounds of our restriction removal regulations.

Adoption of Rules

Accordingly, we adopt the rules set forth in the Appendices below.

This action is taken under the authority of 49 U.S.C. 10321 and 10922(h) and 5 U.S.C. 553.

By the Commission, Chairman Gaskins, Vice Chairman Gresham, Commissioners Clapp, Trantum, Alexis, and Gilliam. Commissioner Clapp dissenting in part and concurring in part, and reserving his right to submit a separate expression at a later date.

James H. Bayne,

Acting Secretary.

[27] House Report *supra*, at 6.

Appendix A—Revisions to the Code of Federal Regulations, Title 49

Part 1002—FEES

(1) 49 CFR 1002 is revised by adding 49 CFR 1002.2(d)(9) as follows:

§ 1002.2 Filing fees.

* * * * *

(d) * * *

(9) An application to remove a restriction or broaden unduly narrow authority under 49 CFR Part 1137..... $350

(2) 49 CFR Part 1137 is added to Title 49 as follows:

PART 1137—REMOVAL OF RESTRICTIONS FROM AUTHORITIES OF MOTOR CARRIERS OF PROPERTY

Subpart A—General

Sec.
1137.1 Purpose.
1137.2 Applicability of Rules.
1137.3 Definitions.

Subpart B—Procedures

1137.10 Form and Content of Application.
1137.11 Notice.
1137.12 Participation of Interested Persons.
1137.13 Furnishing a Copy of the Application Package to Interested Persons.
1137.14 Disposition of the Application.
1137.15 Compliance.

Subpart C—Guidelines for Determining Application

1137.20 Scope of this Subpart.
1137.21 Commodity descriptions.
1137.22 Intermediate point service.
1137.23 Round-trip service.
1137.24 Territorial authority.
1137.25 Miscellaneous restrictions.
1137.26 Contract carriers.
1137.27 Limited term authority.
1137.28 Availability of other application procedures.
1137.29 Impact of restrictions removal.

Authority: 49 U.S.C. 10321 and 10922(h); 5 U.S.C. 553.

Subpart A—General

§ 1137.1 Purpose.

These regulations govern applications filed by motor carriers of property seeking to remove operating restrictions from their certificates or permits in order to:

(a) Broaden reasonably the categories of property authorized by the carrier's certificate or permit;

(b) Authorize transportation service to intermediate points on the carrier's routes;

(c) Provide round-trip authority where only one-way authority exists;

(d) Eliminate unreasonable or excessively narrow territorial limitations; or

(e) Eliminate any other restriction that the Commission deems to be wasteful of fuel, inefficient, or contrary to the public interest.

These regulations implement of 49 U.S.C. 10922(h)(1)(B) and 10922(h)(2).

§ 1137.2 Applicability of rules.

Applications may be filed under these rules to remove restrictions or to broaden authority in certificates and permits issued pursuant to applications filed before December 28, 1980.

§ 1137.3 Definitions.

(a) *County.*—"County" means (1) a county in any State, a judicial district in Alaska, and a parish in Louisiana and (2) a city, town, or village in any State which is not administratively part of a county, New York, NY, and Washington, D.C., and their commercial zones as defined by the Commission.

(b) *STCC.*—"STCC" means the Standard Transportation Commodity Code Tariff currently on file with the Commission at any given time.

Subpart B—Procedures

§ 1137.10 Form and content of application.

(a) *Form and filing requirements.*—No application form is prescribed for filing applications under these rules. Applicants shall submit an original and one copy of their applications to the Secretary, Interstate Commerce Commission, Washington, D.C. 20423. Applicants shall also file a copy of the complete application in the regional office of the Commission for the region in which they are domiciled. Applications shall be typewritten or printed on paper measuring approximately 8½ by 11 inches, with a 1½ inch left-hand margin. Only the original need be signed. A check or money order payable to the Interstate Commerce Commission covering the applicable filing fee must accompany the application. The envelope containing the application and check shall be clearly marked "RESTRICTION REMOVAL APPLICATION". Also each application shall be clearly marked, in the upper right-hand corner of the top page: "RESTRICTION REMOVAL".

(b) *Information which shall accompany the application.*—The application shall contain the following information, in the same order as set forth below:

(1) The exact name and address of the applicant and the docket number

assigned by the Commission to the applicant's authorities.

(2) The name, address, and telephone number of applicant's representative.

(3) A copy of the certificate or permit from which applicant seeks to have restrictions removed or which it proposes be broadened.

(4) A proposed draft of the certificate or permit (commodity and territorial descriptions) with the restrictions removed or the authority broadened as proposed, together with sufficient information for the Commission to determine readily the precise portions of the existing authority which applicant proposes be modified. The redrafted certificate or permit shall be in the same format as the original so that, if the application is granted, it can be issued promptly without further redrafting by the Commission.

(5) In the case of an application to remove a restriction of a type found by the Commission to be inappropriate (see § 1137.25(7) of this part), a reference to the Commission decision in which an identical or substantially similar restriction was found inappropriate.

(6) A caption summary (an original and one copy) of the modifications proposed, suitable for publication in the Federal Register. The caption summary shall include *an accurate summary of the restrictions applicant seeks removed, the authority applicant seeks broadened under these rules, or the authority the applicant would hold if its application were granted. It shall also include the authority (including specific sub numbers) which would be superseded by a grant of the application. For example, a caption summary could state that, "The application seeks to modify Sub-Nos. 1–10, by broadening the commodity description in the authorities from liquid chemicals to chemicals or allied products; by replacing the plantsite restrictions in the authorities with county-wide authority in X, Y, and Z Counties, IL; and by eliminating the in bulk restriction* in *all of the named authorities.* The caption summary shall be double-spaced on plain white paper (no letter heads). Each summary will be checked by Commission staff for its accuracy and *failure to describe accurately the changes applicant seeks may result in a rejection of the application.*

(c) *Information that shall accompany the application.*—The application shall include a statement describing the effect of the proposal upon one or more of the following factors:

(1) The consumption of energy resources;

(2) Potential cost savings and improved efficiency;

(3) The provisions of the transportation policy set forth in 49 U.S.C. 10101(a); or

(4) The provision and maintenance of service to small and rural communities and small shippers.

(d) *Related restriction removal.*—Applicants are expected to combine reasonably related restriction removal requests or requests for broadening of authority in a single application. Two categories of requests are generally considered related: (1) requests related to the same certificate or permit authority. An example of this category would be a carrier which holds a one-way certificate and desires to obtain backhaul authority as well as to broaden its territorial and commodity authority under these rules. (2) Requests seeking to remove the same restriction, or restrictions having a similar effect, from different authorities. An example of this would be a carrier which desires to remove the same equipment restriction from a number of certificates under these rules. In applications combining requests as described above, each request shall be clearly marked and segregated, and each request shall comply with the requirements set forth in § 1137.10(b) (3), (4), (5), and (6). Failure to comply will result in a rejection of the application. Carriers are free to file consolidated applications which do not fit into the two categories described above.

(e) *Incomplete applications.*—Due to the time limits imposed by 49 U.S.C. 10922(h)(2), the Commission cannot await the supplementing of incomplete applications or make extensive revisions to draft Federal Register captions. The failure to submit a complete application or to include a proper caption summary will result in rejection of the application.

(f) *Repeat applications.*—A certificate or permit can be reformed under these rules more than one time. However, a restrictions removal application shall not be filed before a preceding application to reform the same authority has been processed by the Commission.

§ 1137.11 Notice.

Notice to the public of the filing of an application under these rules will be given by the Commission through publication of a caption summary in the Federal Register. Applicant shall deliver (by mail or in person) a copy of the caption summary to the State transportation board or official of applicant's domicile. Applicant shall mail a copy of the application to this State board or official or any State through which the operations described in the application would be performed upon their written request. Applicant shall make copies of the application available for public inspection at its principal place of business and at the office of its representative if at a different location. A copy of the application is also available for inspection at the ICC, Washington, D.C., Office of the Secretary.

§ 1137.12 Participation of interested persons.

Any interested person may comment on the applicant's proposal. Comments (an original and one copy) shall be filed with the Commission within 25 days of the date of publication of notice of the application in the Federal Register. The envelope containing the comment and the comments shall be clearly marked "RESTRICTION REMOVAL COMMENTS." Comments shall be directed to either (1) the merits of the particular proposal, or (2) whether the proposal should properly be considered under these rules.

§ 1137.13 Furnishing a copy of the application package to interested persons.

Applicant's representative is required to furnish a copy of the application package to interested persons after publication. The request must be in writing and must contain a check or money order for $10, payable to applicant's representative. Applicant's representative need not supply copies to any person not sending the appropriate payment. Applicant is required to mail the copy within 5 days of receipt of the request. Non-compliance with this section by applicant may result in dismissal of the application.

§ 1137.14 Disposition of the application.

(a) *Basis for determining the application.*—Except in extraordinary circumstances, applications will be determined solely on the basis of the application itself and any comments that are received. There will be neither oral hearings nor the opportunity for the submission of evidence under modified procedure.

(b) *The Commissions's decision.*—Applications will be published in the Federal Register in the form of tentative decisions granting the authority requested. If no comments are filed, the application will stand granted at the *conclusion of the 25-day comment period,* unless the Commission, prior to that time, stays the effectiveness of the tentative decision.

(c) Administrative finality and appeals.—A decision disposing of an application subject to these rules is a

final action of the Commission. Review of such an action on appeal is discretionary and is governed by the Commission's appeal regulations at 49 CFR 1100.98. Any party seeking review should specify the "extraordinary circumstances" involved in the proceeding to enable the Commission to extend the deadline for final Commission action an additional 90 days.

§ 1137.15 Compliance.

A reformed certificate or permit will be issued upon a grant of an application. Prior to beginning operations under the newly issued authority, compliance must be made with the following statutory and regulatory requirements: (a) for motor common carriers—49 CFR 1043, 1044, and 1310, and (b) for motor contract carriers—49 CFR 1043, 1044, and 1310.

Subpart C—Guidelines for Determining Applications

§ 1137.20 Scope of this subpart.

This subpart contains guidelines designed to assist applicants in filing applications for the removal of operating restrictions. The guidelines indicate certain types of restrictions or operating limitations in operating authorities which the Commission considers, under normal circumstances, to be excessively narrow, wasteful of fuel, inefficient, or contrary to the public interest. They suggest ways in which some such restrictions might reasonably be eliminated or in which limited authorities might be broadened. The guidelines are not intended to constitute a prejudgment of any individual application.

§ 1137.21 Commodity descriptions.

(a) *General commodities carriers.*—Where a carrier is authorized to transport general commodities, restrictions having the effect of precluding the transportation of classes A and B explosives are not considered unduly restrictive and are not normally subject to removal under these procedures. Other restrictions on the commodities which a general commodities carrier may transport are considered unduly restrictive and may normally be removed under these procedures.

(b) *Named commodities or limited classes of commodities.*—Where a carrier is authorized to transport one or more named commodities, the authority is considered unduly restrictive and may normally be broadened under these procedures. The same is true where a carrier is authorized to transport a limited class of commodities, except as indicated in subsection (c) of this section. Commodity classes which carry designations of three digits or more in the Standard Transportation Commodity Code are normally considered unduly narrow. Use of these procedures is normally appropriate for applications which seek—

(1) to expend such a commodity authorization to the two-digit STCC level;

(2) to replace such an authorization with a commodity description contained in *Descriptions in Motor Carrier Certificates*, 61 M.C.C. 209 (1952) and 766 (1953); or,

(3) to replace such an authorization with a broader class description generally accepted by the Commission, such as commodities in bulk, commodities which because of their size or weight require special equipment, or oilfield commodities as described in *Mercer Extension-Oilfield Commodities*, 74 M.C.C. 459 (1946).

(c) *Commodities dealt in by a particular business.*—Where a carrier is authorized to transport "such commodities as are dealt in by" a particular industry, such as mail order houses or retail grocery stores, the authority is not considered excessively narrow, and applications for modification should not normally be filed under these procedures.

§ 1137.22 Intermediate point service.

Certificates which authorize regular-route service and preclude service at intermediate points on the carrier's service routes, either by way of a specific restriction against performing such service or by virtue of the fact that they allow service at certain intermediate points but fail to name other points, are considered unreasonably restrictive. Use of these procedures is appropriate for seeking removal of any restriction or operating condition which inhibits service at intermediate points on a regular-route carrier's service route.

§ 1137.23 Round-trip service.

Certificates or permits which authorize service in one direction only are considered unduly restrictive. Use of these procedures is appropriate for applications which seek return movement authority limited to the same commodities the carrier is authorized to transport on the outbound trip or applications which seek to expand the round-trip authority in a manner described in § 1137.21. Implied in the round-trip commodity description is materials, equipment, and supplies in both directions.

§ 1137.24 Territorial authority.

(a) *Less than county-wide authority.*—Except as indicated in paragraph (b) of this section, authorizations to serve a territory less extensive than a county (including authorizations to serve named facilities or limited in a similar manner) are considered excessively narrow. Use of these procedures is normally appropriate for applications seeking the expansion of territorial authority to include all points in the county in which the authorized service point (including any portion of the commercial zone of an authorized point) or other limited service area is located. Where an authorized service point is located within a given city as well as a county, an applicant can seek expansion of authority to the city (which includes implied authority of points in its commercial zone). Use of these procedures is also normally appropriate for applications to remove restrictions which preclude service at points or areas smaller than a county.

(b) *Service at facilities not precisely located.*—Where a carrier has authority to serve a broad territory limited to service at the facilities of a specified person, company, or type of business, and where the precise location of the facilities, by reference to a city, county, or the like, is not apparent from the certificate or permit, the limitations are not considered excessively narrow, and applications for modification should not normally be filed under these procedures. These procedures can, however, be used to expand authority limited to a particular business' facilities at named points.

§ 1137.25 Miscellaneous restrictions.

Use of these procedures are normally appropriate for applications seeking the removal of the following types of restrictions, which the Commission considers to be contrary to the public interest.

(a) Restrictions which require or preclude the use of a specific type of equipment, such as "in tank vehicles" or "except in dump or hopper type equipment."

(b) Restrictions which have the effect of preventing a common carrier from participating in joint-line service with another carrier or from handling traffic having prior or subsequent movement by any mode of transportation or type of carrier.

(c) Restrictions which impose size or weight limitations, or both. This does not include restrictions relating to shipments weighing 100 pounds or less under certificates granted under the so-called "fitness only" procedures in 49 U.S.C. 10922(b)(4)(D).

(d) Restrictions which specify Canadian and Mexican destinations or origins to be served, or designate specific port of entry points which must be used.

(e) Restrictions which limit the movements of a common carrier to transportation performed on freight forwarder bills of lading.

(f) Restrictions which limit the services an irregular-route carrier can provide to traffic moving through a named point, area, or State. For example, irregular-route authority "limited to the transportation of traffic moving from, to, or through points in (a specific State)."

(g) Restrictions which the Commission has found to be inappropriate and has refused to impose in another proceeding.

§ 1137.26 Contract carriers.

Where a permit of a contract carrier limits the carrier's territorial scope of service for a named shipper, shippers, or a class of shipper, such authority is considered unduly restrictive. Use of these procedures is normally appropriate for applications seeking to broaden the territorial scope of such permits. Such applications can request authority to serve the single-named shipper, shippers, or class of shippers, "between points in the United States." The commodity description in contract permits can be broadened, and unreasonable restrictions removed, to the extent specified in Subpart C of this Section.

§ 1137.27 Limited term authority.

Certificates and permits limited to a specified duration ("term" limitation) can be modified under these procedures to the same extent as authority without a term limitation. Any modified authority approved under these rules will contain the same limitation as the original authority. These procedures cannot be used to remove the limited term condition from existing authority.

§ 1137.28 Availability of other application procedures.

The provisions of this subpart which describe as inappropriate the use of these procedures for applications seeking the elimination of certain types of restrictions or the modification of certain types of limited authorities should not be consulted as discouraging the filing of applications seeking such relief pursuant to the Commission's normal application procedures under 49 U.S.C. 10922(b) and 10923(b).

§ 1137.29 Impact of restrictions removal.

The Commission has found that, under normal circumstances, the elimination of restrictions or the modification of authorities designated in this subpart as unduly restrictive, unreasonable, excessively narrow, or contrary to the public interest will reduce the consumption of energy resources, will offer potential cost savings and improved efficiency, will be consistent with the provisions of the transportation policy set forth in 49 U.S.C. 10101(a), and will assist in providing and maintaining service to small and rural communities and small shippers.

Note.—Appendix B will not appear in the Code of Federal Regulations.

Appendix B—Environmental Assessment; Removal of Restrictions From Authorities of Motor Carriers of Property

[Ex Parte No. MC-142 (Sub-No. 1)]

Summary and Conclusion

The establishment of procedures to expedite removal of operating restrictions, as proposed in Ex Parte No. MC-142 (Sub-No. 1), would slightly improve on a nationwide basis, energy efficiency and public safety, and reduce air and noise pollution. Although not deemed significant in the context of the National Environmental Policy Act, the enhancement of energy efficiency and environmental quality comport with established national objectives.

1.0 Description of the Proposed Action

The rules proposed in Ex Parte No. MC-142 (Sub-No. 1) would establish a framework for expediting applications to remove excessively narrow operating restrictions in individual carriers' operating authorities. Among the restrictions which could be relaxed or removed under the proposed rules are commodity restrictions, backhaul restrictions, intermediate point restrictions, territorial restrictions, and restrictions on the classes of shippers which can be served.

The restrictions which could be removed under the proposed rules historically may have inhibited carrier efforts to attain maximum operating efficiency. A motor carrier hauling goods from point A to point B cannot pick up an available return load at point B bound for point A unless the carrier has authority to carry the commodity *and* unless the carrier has bidirectional operating authority between points A and B. A motor carrier operating between points C and D cannot fill up a partial load with a shipment bound for an intermediate point unless the carrier has authority to serve the intermediate point and unless the carrier has authority to serve the intermediate point and unless the carrier has authority to carry the commodity bound for the intermediate point. These and other restrictions have contributed to depressed load factors which tend to increase vehicle miles and to reduce energy-consumption.

Environmental Impacts

The environmental impacts (including energy consumption) of the proposed rules should be slightly beneficial. Information obtained by the ICC during 1976 in the *Empty/Loaded* survey suggests that a small fraction of trucks are forced to travel empty or partially empty because the ICC operating restrictions. Of the 3032 empty trucks in the survey sample, only 16 were empty because they lacked ICC operating authority.[1] Of the 2007 partially empty trucks in the survey sample, none was partially empty because they lacked ICC operating authority. Based on the survey results, it is not expected that any major savings in vehicle mileage or improvements in load factors will result from the proposed rules. The minor reduction in vehicle mileage and improvement in load factors resulting from the proposed rules will, on a nationwide basis, slightly reduce energy consumption, roadway accidents, air pollution, and noise pollution.

The issues considered in this document were also the subject of a recently completed report entitled "Consequences of Motor Carrier Deregulation on Fuel Efficiency" prepared by Thomas Corsi and Merrill Roberts for the ICC Office of Policy and Analysis. There it was determined that restrictions on motor carrier operating authorities artificially and unreasonably contributed to motor carrier energy inefficiency. It was suggested that removal of such restrictions, in the long run, would enhance energy efficiency within the motor carrier industry. The report of Corsi and Roberts was based to a large extent on studies by others on this and related topics.[2]

[1] It should be noted, however, that 1,184 of the empty trucks were on their way to pick up another load. It is possible that a portion of these drivers could have obtained another load closer to the previous destination had ICC authority been available. See Bureau of Economics, Interstate Commerce Commission, *Empty/Loaded Truck Miles on Interstate Highways in 1976*, Washington, D.C., April, 1977.

[2] See e.g., Stephen Sobotka and Thomas Domencich, "Traffic Diversion and Energy Use Implications: Another View," in Paul W. MacAvoy and John W. Snow (eds.) *Regulation of Entry and Pricing in Truck Transportation*, American Enterprise Institute, 1977, p. 198; Drake Sheahan/Stewart Dougall, Inc., *Evaluation of Potential Changes to Federal Economic Regulations Governing Private Carriage*, U.S. Department of Transportation, Washington, D.C., December 6, 1974; and Roland K. Kolins, "The Regulatory

Footnotes continued on next page

Statement of Energy Impact

Removal of Restrictions From Authorities of Motor Carriers of Property

The rules proposed in Ex Parte No. MC-142 (Sub-No. 1) would permit motor carriers of property to amend or eliminate operating restrictions which have impeded operational efficiency. By permitting a slight improvement in load factors and a reduction in empty mileage, the proposed rules will induce a modest reduction in energy consumption.

[FR Doc. 80-40512 Filed 12-30-80; 8:45 am]
BILLING CODE 7035-01-M

---

49 CFR 1002 and 1136

[Ex Parte No. MC-122 (Sub-No. 1)]

Implementation of Intercorporate Hauling Reform Legislation

AGENCY: Interstate Commerce Commission.

ACTION: Notice of final rules.

SUMMARY: Interim rules were adopted in this proceeding at 45 FR 45526-28 on July 3, 1980, to implement 49 U.S.C. 10524(b) notice conditions. The interim rules implemented legislation which allows related but separately incorporated members of the same corporate family to provide transportation service to each other without obtaining a license from the commission, subject to certain conditions and limitations. Experience with these rules indicates that several adjustments are needed to enable more efficient processing of notices, or to lessen the burdens of compliance. As modified, the interim rules are adopted as final regulations for filing of notices of intent to engage in Compensated Intercorporate Hauling (CIH) operations.

EFFECTIVE DATE: January 30, 1981.

FOR FURTHER INFORMATION CONTACT: Melvin B. Werner, (202) 275-7987, or Kathleen King, (202) 275-0956.

SUPPLEMENTARY INFORMATION: Our notice of interim rules sets out the background for this proceeding at some length. It is unnecessary here to expand on that discussion. Our final rules are based on the comments received.

In addition to procedural issues, the comments raise a number of substantive questions concerning the meaning and impact of Section 9 of the Motor Carrier Act of 1980 (Pub. L. 96-296, 93 Stat. 798-99). We note in this regard that compensated intercorporate hauling (CIH) is specifically exempted from Commission regulation. Thus, we must exercise caution to avoid actions having the effects of prescribing the mechanics of CIH service. Where no substantial controversial questions are involved, they will be addressed in this notice. Others, as more fully described below, which may be more controversial, warrant separate consideration.

We will first consider issues relating to the operation and effectiveness of the interim rules, identifying changes which have been shown necessary. Next, we will address various substantive questions. Finally, we will resolve various incidental matters.

I. Procedural Matters

Issues will be considered in relation to the volume of comments received, beginning with those receiving the greatest attention.

A. Filing Fees

Various comments contend either that we lack authority to impose such a requirement, or that the amount of $150 is excessive in light of the minimal processing involved. Our authority for this provision is 31 U.S.C. 483(a) allowing imposition for filing fees by agencies providing,

"* * * publication * * * or similar thing of value or utility performed, * * * or issued by any Federal agency * * * to or for any person. * * *" Our purpose in this regard is to recover part of the direct costs the Government would otherwise have to bear for the Federal Register notices which are mandated by the new statute. It does not appear an undue burden on enterprise to pass through an amount approximating our cost. In addition, the fee must necessarily accompany an original or updated notice submitted for publication, and rules will be modified to clarify the interim rules in this regard.

Another proposal relating to fees is to reduce the charge for supplemental filings. Other comments suggest that we eliminate the charge for filings of a technical nature, such as to indicate a change of name of a member of a corporate family. Given the basis for the imposition of the fee it would be inappropriate to lower the amount of the fee for supplemental filings. Unless the notice carried in the cab of the motor carrier correctly identifies each corporate subsidiary involved in CIH, the notice would be pointless. Therefore, we will require supplemental filings when the name of a corporate member is changed.

There is another situation where the substance of the service does not change in such a way that a new notice should be necessary. That is a situation where a subsidiary listed as a participant in CIH operations is absorbed into a parent corporation and its separate corporate identity is extinguished. The comments indicate that this is a relatively common practice in some corporate structures. While the prior notice would be rendered inaccurate as to the scope of the corporate family involved, it would be unlikely that the extent of operations involved would change to any extent. We will eliminate the refiling requirement in this case to reduce the burden on the business community. This change is not contrary to the intent of the legislation to advise the public of the intent of a corporation to engage in CIH service and to describe the relative scope of such operations.

It has also been suggested that the time period for submitting a new notice where a change in ownership has occurred, be extended to 30 days from the 10 days provided in the interim rules. While we would expect that some delay would occur in spreading word of such changes through a far-flung corporate empire, the 10-day rule does not appear to be unreasonably short and it will be retained. Further, CIH carriers are reminded that where ownership in a subsidiary falls below 100 percent, actual operations under the exemption must end immediately.

B. Notarization

A number of parties ask whether the affidavit accompanying a proposed notice is to be notarized. We believe such a requirement is an unnecessary formality which may be dispensed with. Title 28 of the U.S. Code provides in Section 1746, as follows:

> Wherever * * * any matter is required or permitted to be supported, * * * by * * *, affidavit, * * * such matter may, with like force and effect, be supported, evidenced, established, or proved by the unsworn declaration, * * * or statement, * * * of such person which is subscribed by him, as true under penalty of perjury, * * *.

It is clear that the notice in 49 U.S.C. 10524(b) is a type of document requiring accurate statement of certain factual matters. If the ownership conditions of the statute are represented as being

---

Footnotes continued from last page

Program: The Effect on Entry Backhaul, and Energy Consumption," *Motor Carrier Economic Regulation* National Academy of Sciences, Washington, D.C., 1978, pp. 179-193. Charles River Associates, Inc. and Cambridge Systematics, Inc., *Potential Fuel Conservation Measures by Motor Carriers in the Intercity Freight Market*, Vols. I and II, prepared for Federal Energy Administration, Washington, D.C., April 1977. Domenic J. Maio, *Freight Transportation Petroleum Conservation Opportunities—Viability Evaluation*, U.S. Department of Transportation, Transportation Systems Center, Cambridge, Mass., March 1979, pp. 4-13 to 4-16.

satisfied when, in fact, they are not, a question of either fraud or perjury may be present. Under 18 U.S.C. 1001, a person guilty of the former is subject to a fine of $10,000, while under the terms of 18 U.S.C. 1621, the latter conduct carries a fine of $2,000. Knowledge of these sanctions, and recognition of their applicability should ensure accuracy of reporting far more than would an anachronistic notarial seal.

Because of our findings, it will be necessary to revise the affidavit format prescribed in proposed 49 CFR 1136.3 to conform with 28 U.S.C. 1746. We will do so by adding a new section 49 CFR 1136.3(d) which will require the affirmation of ownership prescribed in the preceding subsection, 49 CFR 1136.3(c), to be accompanied by one of the declarations set out in 28 U.S.C. 1746. We note in this regard that this formula applies to foreign corporations, as well as to domestic firms. Many firms based abroad which conduct operations within the United States state that obtaining notarization of documents in their native countries involves substantial problems and red tape. These provisions should resolve any such problems, and ease compliance by all concerns with the requirements of 49 U.S.C. 10524(b).

C. Addresses

A question raised in a number of the comments concerns the requirement that the tendered notice include the address of the principal office of each of the subsidiaries within the corporate family which are intended to engage in CIH operations. It has been pointed out that in many instances a corporation may have components located in a number of places with no single one being an actual "principal office." Alternatively, the subsidiaries may share the headquarters of the parent which renders duplicative the additional listing of all of the subsidiary addresses.

We believe that, rather than attempting to specify what address should be used in any given case, we should require identification of only the State of incorporation of the subsidiaries included in a list. This approach will reduce the Federal Register notice and afford a means to contact a subsidiary if there is question of the *bona fides* of particular CIH operations. We will require submission of the complete address of the parent corporation which is responsible for filing the notice. This address should identify the location of the offices from which the corporate family is managed or the location from which central or financial control of the parent, if not of the various subsidiaries, is exercised.

D. Who Must Prepare Notice

Another question raised is who within a corporation or corporate family must sign the required affidavit of intent. It appears consistent with legislative intent to expect someone in the capacity of an officer of the filing corporation, rather than an employee or representative of the corporation, to be the person who performs this function. Our interim rules are unclear in this regard and will be changed to state that the affidavit must be executed by an officer of the parent.

E. Record-Keeping

Other comments address our observation that the Commission would not retain extensive records of notices submitted for publications. The Private Carrier Conference and Private Truck Council of America, Inc., among others, suggest that it would be worthwhile to have some central repository of data indicating the extent of participation in CIH operations. The Office of Secretary must retain information of the filings it has received. Those records would appear adequate to satisfy the interests of outside parties expressing concern for some record retention. The public interest plainly does not require us to retain extensive records relating to CIH operations. To facilitate recordkeeping, our final rules will require the submission of an original and one copy of a notice of intent to initiate CIH service.

F. Initiation of Operations

Several parties submitted comments requesting specific changes in proposed Rule 49 CFR 1136.2, "Applicability", which states that operations under the exemption may be performed as soon as the notice is filed with the Commission. Under Commission Rules (49 CFR 1100.4(b)), filing is accomplished at the time pleadings, requests, or other papers or documents are received at the Commission. One position, which is specifically espoused by the ATA, is that operations should not be allowed until the notice is actually published in the Federal Register (which may not occur until a month after filing). Alternatively, the Private Carrier Conference requests a statement in the rule that operations may begin upon transmission of the notice to the Commission. This would enable operations to begin, for example, upon placing the notice in the mail in instances where hand delivery or other means is not used.

The ATA position is without merit. It is clearly consistent with legislative intent to enable operations to begin as early as possible. See Floor Debate on S2245, reported in the *Congressional Record—Senate* at p. S3596 (daily ed. April 15, 1980). Considering the language of 49 U.S.C. 10524(b) in light of the legislative history, we believe that the various filing requirements stated in that subsection are not to be considered preconditions for valid CIH operations.[1] Nor is there any indication that the copy of the notice required to be carried in the cab of vehicles conducting CIH operations under 49 U.S.C. 10524(b)(4) must be the notice published in the Federal Register.

Because of the foregoing, we will retain our rule allowing operations to begin upon filing of a notice. Our interim rules, however, will be revised to indicate that where transmission is by mail, it is unnecessary to defer service until the notice is received and acknowledged by the Commission; rather, they may begin upon placing such notice in the mails. Our final rule at 49 CFR 1136.2 will be modified accordingly. In view of the 30-day publication requirement in 49 U.S.C. 10524(b)(3), we will continue to compute the date of receipt as the filing date for all notices for purposes of determining our internal deadlines.

Also in conjunction with the technicalities of notice preparation, we suggest that if the corporate office which will conduct CIH service differs from the one executing the notice, the operating office should be identified in case questions arise which require clarification prior to publication. The name of the traffic department or legal department, for example, should appear in a cover letter to enable us to meet the statutory deadlines. A new section 49 CFR 1136.3(f) will be added to implement this proposal. Subsequent subsections will be relettered accordingly.

Several parties seek various types of additional provisions to deal with specific concerns. We will consider

[1] In so finding we realize that a contrary view may be implied from comments on page 22 of the Report of the Committee on Public Works and Transportation, No. 96-1069, June 3, 1980, as follows:

(T)he parent company need only notify the Interstate Commerce Commission of its intent (to engage in CIH) . . . Following publication the Commission will receipt and return a copy of the notice. A copy of the notice must be kept in the "cab of all vehicles conducting the transportation."

This language, however, appears to be intended as a statement of procedural guidelines, rather than an interpretation of statutory requirements. Since we have adopted comprehensive procedures to implement 49 U.S.C. 10524(b), we consider the cited report section as precatory only. In view of the matters discussed in the text, we believe the language of the section clearly supports a rule allowing pre-publications.

these suggestions and observations at this juncture.

II. Substantive Matters

A. Ownership Limitations

Comments by several parties point out that corporate situations often arise where true 100-percent ownership is impossible. The examples given are situations where tender-offers have been made and a minimal number of shares have not been made available for purchase, or situations where the founders of an acquired company retain some shares in their firm while in the employ of the acquiring parent. Comments propose that additional language be added to part 1136 CFR defining the term "100 percent ownership" in such a way as to include alternative situations.

The Commission's authority to implement legislative proposals is relatively broad. *Am. Trucking Ass'n., Inc.* v. *I.C.C.*, 602 F. 2d 444, 451 (D.C. Cir. 1979). There is no reference to statutory history, however, which indicates that the drafters intended to enable operations in a situation where less than complete ownership is present. Therefore, we will decline, at this time, to adopt a rule having the effect of varying this requirement. We will monitor the situation, though, and if it should develop that the lack of a provision of the type requested substantially frustrates the legislative intent and hinders the ability of corporations to engage in CIH operations, we may readdress the matter.

We wish to distinguish the situation in the preceding paragraph from another type of interlocking ownership which appears to be within the purview of this statute, that is where two or more companies are entirely owned by a single individual or a group of individuals organized as a partnership, or in some other manner. In these situations of horizontal organization, although it is not organized in the corporate model, it appears to be proper for the non-corporate parent or parents of such companies by or for which service is proposed to be identified as such in an appropriately modified notice form. The provision of 49 U.S.C. 10524(b) (preceding subsection (b)(1)), makes it clear that the exemption is available to all qualifying "persons." By definition this term includes individuals as well as incorporated entities. There is nothing to indicate that the provisions of 49 U.S.C. 10524(b) were intended to bar operations where the 100-percent ownership is present, but the organizations are structured so that an individual or partnership is the owner. Thus, we see no prohibition against operations by such firms within the exemption involved. No modification of the interim rules appears necessary to effectuate this policy.

B. Scope of Notice

Another question is whether a notice may be filed by a corporation other than the ultimate parent of a corporate family. It is our interpretation that 49 U.S.C. 10524(b) does not prevent one other than the ultimate parent from filing the notice of intent required in 49 U.S.C. 10524(b) (1) and (2). This could typically occur in firms with vertical forms of organization. If only one firm is engaged in operations to which CIH service rules pertain, only the parent of that firm need file a notice listing its directly- or indirectly-owned subsidiaries. It may not, however, include in its notice firms which would be subsidiaries of the ultimate parent which comprise a different branch of the conglomerate. It could serve these only if the ultimate parent were to file the notice. Along these lines, if American operations of a foreign corporation were grouped under one domestic corporate entity, it would be appropriate for that entity to file the notice identifying itself as the parent. It would only be necessary for the foreign corporation to comply with the notice requirements, and identify itself as ultimate parent, if traffic which is under its specific control moves within this country. Other situations, where only limited operations are intended, would also appear to warrant limited filing.

C. Separate Incorporation of CIH Operations

Much comment within this category relates to the observation in the notice of interim rules that it would be proper for private carriers to establish separate, wholly-owned subsidiaries to perform CIH operations. Those parties which commented on this issue support our position that such means may be used to perform CIH operations. In this regard, we have considered the language and legislative history of Section 9, and are convinced that its central purpose is to terminate the prohibition against CIH service, and thus to reverse the underlying policy approved in *Schenley* v. *United States*, 326 U.S. 432 (1946). That policy was to subject to regulation those separate transportation subsidiaries established to serve affiliates.

Given that the statute removes CIH by a "person", which includes separately incorporated subsidiaries, from the Commission's jurisdiction and thus permits corporate families to set up separate, exempt transportation subsidiaries to serve the corporate family, the question has arisen whether a subsidiary's operations must be limited only to proprietary service in CIH operations. We believe the answer is clearly *no*. First of all, nothing in the statutory language or the legislative history requires or suggests such a result. Moreover, in our recent ruling in *Toto Purchasing & Supply Co., Inc.*, 128 M.C.C. 873 (1978), as implemented in Ex Parte No. MC-118, 43 Fed. Reg. 55051 (November 22, 1979), we adopted a policy of allowing private carriers to obtain for-hire authority while maintaining their unregulated, private transportation operations. Congress was aware of our decision. As long as the conditions of Ex Parte No. MC-118 are satisfied, we see no impropriety in dual, private-regulated service by a corporate subsidiary set up to render CIH. None of the comments on this question offered views supporting a contrary position.

This in turn raises a correlative issue. When a conglomerate is the 100-percent owner of a for-hire transportation firm, can that subsidiary transportation firm engage in CIH for its corporate affiliates? We believe the answer to this question is *yes*. Our decision in *Toto, supra*, recognizes that there is no statutory prohibition against issuing for-hire authority to a private carrier, because both regulated and exempt operations may be conducted by the same firm. That principle would apply, as well, to operations by a for-hire carrier under the provisions of 49 U.S.C. 10524(b) for its corporate affiliates, even though the service is not, in a strict sense, complementary to private carriage service. More importantly, however, because qualifying CIH operations are exempt, private carriage, prevent for-hire carriers from also providing CIH service.

We note, furthermore, that carriers are not restricted to serving corporate affiliates only by means of the CIH exemption. In the recent decision in *Atlantic Coast Exp., Inc., Ext—East Coast Ports*, 132 M.C.C. 184 (1980), the Commission expressly removed the bar to carriers' serving affiliates in certificated operations. Corporate families, therefore, have numerous options in arranging the movement of their traffic, which should enormously increase the efficiency of their operations.

D. Additional Proceedings Needed

Other substantive matters have been raised in the comments that are of import to both the regulated and unregulated segments of the

transportation industry. Because of their significance, it appears that they should be afforded consideration independent of this proceeding. The first of these issues is whether private carriers may perform CIH operations by using owner-operators. It has been the position of the Commission that when an owner of equipment contracts to provide service to an individual or company not engaged in transportation operations, the lessor is engaged in for-hire transportation unless the shipper assumes all the burdens of transportation. See *United States* v. *Drum*, 368 U.S. 370 (1962). Certain comments contend that the *Drum* decision does not preclude CIH operations by use of owner-operators.

Another question which has been raised is whether the exemption may be seen as extending to CIH service by warehouses or air freight forwarder. The example given is a situation where the unregulated warehouse or air freight forwarder sets up a subsidiary to provide for-hire surface transportation of traffic controlled by that entity. It has been posed that such firms may not, upon compliance with our prescribed notice requirments, move traffic under the control of the parent by reason of the CIH exemption. Both of these matters involve issues of sufficient difficulty to warrant being considered separately from this proceeding.

III. Other Matters

A. Procedural Defects Alleged

It is asserted that there has been a failure to analyze energy consumption consequences as required by 49 CFR 1106 and 1108 in developing the interim rules. This position is without merit, for our notice of interim rules specifically found that no signficant environmental or energy impacts are likely to result from this action. Nothing has been identified in the considered comments which would warrant a different result.

B. Minority Opportunities.

In yet another vein, the Minority Trucking-Transportation Development Corp. (MTTDC), questions the sufficiency of the interim rules to meet the needs of minority carriers. it states: . . . (T)he intercorporate hauling plan must allow for the principal to agree that where the traffic is moving for the account of the U.S. Government the tenets in Public Law 95–507 must apply. Our position is that these giant corporations, with 20 to 30 wholly-owned subsidiaries, will now be taking opportunities away from the minority transportation industry, in contradiction to the National Transportation Policy.

In essence, MTTDC argues that the intercorporate hauling rules will divert traffic from minority carriers. While section 9 may have an impact on the amount of traffic available to for-hire carriers in general, it is not obvious that such diversion would occur at the expense of minority-owned carriers. In fact, Congress, recognizing the detrimental affect of regulation on minority participation in the trucking industry included in a fitness-only entry test for the hauling of government freight. The new competition and improved service fostered by the participation of minority firms in this traffic may actually dissuade private carriers from entering the government freight market on the scale they may have anticipated prior to entry reforms. Congress specifically intended that qualifying carriers have the freedom to transport their own products in their own vehicles. It appears clearly violative of Congressional intent to attempt to condition that freedom in the circumstances involved here.

C. Clarifications

In addition to revisions in accordance with the responses, we will also modify the final rule in minor respects to make the requirements more specific and easy to follow. The reference in proposed 49 CFR 1136.4(c) to 49 CFR 1136.4(a) will be changed to 49 CFR 1136.3(a). This change is made to correct an obvious error in the notice of interim rules. We note that when an updated notice is filed, it should be in the same form as an original notice, with appropriate additions or deletions.

As an additional matter, our interim rules require that mailed notices be sent by "Certified" mail. This requirement appears unnecessarily burdensome and will be deleted. Companies are welcome to use a form of mailing which will result in their receiving a return-receipt; however, we will not impose this as a requirement. When notices are received for processing, the Secretary's Office will then issue an acknowledgment advising whether the notice is in order and stating a projected publication date. Interim rules 49 CFR 1136.2 and 1136.3(e) will be revised to conform with these findings.

We believe the interim rules as modified here will enable prompt, efficient processing of the notices required by the Motor Carrier Act. While some substantive matters have been considered in this notice, and others have been identified for consideration in related proceedings, we reaffirm that our function is essentially one of defining limits for these operations. We do not intend to regulate or otherwise hinder the actual performance of service within the exemption. We believe our rules achieve this objective and represent a balanced approach to adopting effective procedures while imposing minimum burdens on those subject to the provisions at issue.

We adopt our preliminary finding in the notice of proposed rules that this action does not significantly affect the quality of the human environment or conservation of energy resources. No comments have been submitted on any matter indicating that a contrary position is warranted, these rules being essentially procedural to implement requirements established by Congress.

Final rules adopted in this proceeding are set out in the appendix.

This notice of final rules is issued under the authority of 49 U.S.C. 10321 and 5 U.S.C. 553.

Dated: December 19, 1980.

By the Commission, Chairman Gaskins, Vice Chairman Gresham, Commissioners Clapp, Trantum, Alexis, and Gilliam. Commissioner Clapp concurs in part and dissents in part and will submit a separate expression at a later date.

James H. Bayne,

Acting Secretary.

Appendix—Final Rules Implementing 49 U.S.C. 10524(b)

Accordingly, 49 CFR Part 1136 is revised to read as set forth below:

PART 1136—COMPENSATED INTERCORPORATE HAULING OPERATIONS

Sec.
1136.1 Scope.
1136.2 Applicability.
1136.3 Notification.
1136.4 Change(s) in participation intercorporate hauling.

Authority: 49 U.S.C. 103231 and 5 U.S.C. 553.

§ 1136.1 Scope.

Compensated transportation service by a member of a corporate family for other members of the same corporate family ("Compensated Incorporate Hauling" or "CIH") is exempt from Commission regulation except for certain notice requirements. To qualify for the exemption, the participants shall be members of the corporate family in which the parent owns, directly or indirectly, a 100-percent interest in the subsidiaries. These regulations prescribe procedures for compliance with the notice requirements of 49 U.S.C. 10524 (b) and (c).

§ 1136.2 Applicability.

Motor carrier service under this exemption may be performed as soon as the notice required by these rules is filed with the Commission. Where transmission of the notice is through use of the mails, operations may begin as soon as the materials are placed in the mail. In all cases the date of filing will be the date of receipt at the Interstate Commerce Commission Offices.

§ 1136.3 Notification.

(a) General requirements—Whenever a corporation seeks to initiate compensated intercorporate hauling it shall be necessary for the corporation to prepare a Federal Register notice in accordance with the following format:

Notice of Intent To Engage in Compensated Intercorporate Hauling Operations

This is to provide notice as required by 49 U.S.C. 10524(b)(1) that the named corporations intend to provide or use compensated intercorporate hauling operations as authorized in 49 U.S.C. 10524(b).

1. Parent corporation and address of principal office:

2. Wholly-owned subsidiaries which will participate in the operations, and State(s) of incorporation:

(i) * * *

(ii) * * *

(iii) * * *

(b) Parties subject to requirements—All notices must be submitted by the parent of the corporate family for whose members the proposed compensated intercorporate hauling operations are to be performed.

(c) Affidavit—The notice shall include the following affidavit from an officer or other person legally qualified to act on behalf of the parent:

I affirm that ———— is a corporation which directly or indirectly owns a 100 percent interest in the subsidiaries participating in compensated intercorporate hauling under 49 U.S.C. 10524(b), listed in the attached notice.

(d) Declarations—An affidavit of 100-percent ownership under subsection (c) shall be accompanied by a declaration of the individual making the affidavit, in substantially the following form:

I, ————, declare under penalty of perjury under the laws of the United States of America that the foregoing is true and correct. Executed on (date).

The declaration shall be signed by the person making the affidavit. An affidavit executed in this manner does not need to be notarized.

(e) To whom notice sent—The original and one copy of a notice of intent to engage in CIH operations shall be sent to: Secretary, Interstate Commerce Commission, Washington, D.C. 20423. A notation shall appear on the envelope in which the notice is transmitted as follows: *"CIH Notice"*. On receipt the Secretary's Office will issue an acknowledgment indicating whether the submission is in order, and stating a projected publication date.

(f) Cover letter requirement—Where the office which has prepared a notice on behalf of a corporate family differs from the one executing the notice, that office shall be identified in a cover letter attached to the tendered notice.

(g) Miscellaneous—The filing of a CIH notice does not initiate a proceeding before the Commission nor is any right of protest created by publication of a notice in the Federal Register; publication is a ministerial function and does not indicate Commission investigation or affirmation of the representations appearing in the notice concerning corporate affiliation.

(h) Filing fees—Filing fees as provided for in 49 CFR 1002 shall accompany the original notice of intent required by this Part. A separate filing fee shall also accompany each updated notice required by this part.

§ 1136.4 Change(s) in participation in intercorporate hauling.

(a) If the parent intends that an additional subsidiary participate in the compensated intercorporate hauling, it shall file an updated notice.

(b) Whenever the interest which a corporation owns in a subsidiary participating in compensated intercorporate hauling becomes less than 100 percent, operations under 49 U.S.C. 10524(b), by or for that subsidiary, shall be discontinued and the parent shall file an updated notice within 10 days.

(c) Updated notices will be subject to publication in the Federal Register and shall be submitted in the format prescribed in § 1136.3(a). These will be subject to the filing fee provided in 49 CFR 1002.2(d)(46).

(d) Where there is action by a corporate family which affects the status of a member participating in CIH operations, but the scope of the operations remain unchanged, an updated notice need not be filed. Such actions include, but are not limited to: name changes by a parent or subsidiary; absorption of a subsidiary into a parent resulting in extinction of its separate, corporate status. However, name changes by a parent or subsidiary require a supplemental notice under 49 CFR 1136.4. Appropriate changes to indicate such occurrences shall appear in any updated notices required by subsections (a) and (b) of this section.

PART 1002—FEES

Section 1002.2 Filing Fees is amended as follows:

(1) In paragraph (c) new material is added to the end of paragraph (1). As amended, paragraph (c)(1) reads as follows:

§ 1002.2 Filing fees.

* * * * *

(c) Related or consolidated proceedings. (1) Separate fees need not be paid on related applications filed by the same applicant which would be the subject of one proceeding, such as a single petition for modification of more than one certificate or permit held by the same person; a related plan of track relocation, joint use, purchase of trackage rights, and issuance of securities; a section 5 motor common carrier acquisition application combined with a related section 207 application for a certificate of public convenience and necessity; or the like. In such instances, the only fee to be assessed will be that applicable to the embraced proceeding which carries the highest filing fee as listed in paragraph (b) of this section; except that, directly related applications involving a transfer under section 206(a)(6) or section 212(b), and an application on Form OP-OR-9 for gateway elimination and/or a conversion, the sole fee shall be the basic fee for the transfer application. Each filing of an original or updated notice of intent to engage in compensated intercorporate hauling operations shall be considered a separate filing, and shall be subject to payment as described in paragraphs (d)(45), or (d)(46) of this section.

2. In paragraph (d), new items (45) and (46) are added to the listing under "Part IV" as follows:

* * * * * *

(45) A notice required by 49 U.S.C. 10524(b) to engage in compensated intercorporate hauling $150

(46) A notice required by 49 CFR 1136.4 to update a previously filed notice of intent to engage in compensated intercorporate hauling $150

[FR Doc. 80-40518 Filed 12-30-80; 8:45 am]

BILLING CODE 7035-01-M

INTERSTATE COMMERCE COMMISSION

[Ex Parte No. MC-122 (Sub-No. 2)]

Lease of Equipment and Drivers to Private Carriers

AGENCY: Interstate Commerce Commission.

ACTION: Proposed policy statement.

SUMMARY: The Interstate Commerce Commission proposes to reexamine its policy behind the restriction which prohibits owner-operators and others who do not hold authority from this Commission from leasing their equipment with drivers directly to private carriers.

DATE: Comments are due on or before February 17, 1981.

ADDRESS: Send an original and 15 copies, if possible, of comments to:

Ex Parte No. MC-122 (Sub-No. 2), Room 5416, Office of Proceedings, Interstate Commerce Commission, Washington, DC 20423.

FOR FURTHER INFORMATION CONTACT:
Robert G. Rothstein, 202-275-7912;
or
Edward E. Guthrie, 202-275-7691.

SUPPLEMENTARY INFORMATION:

History—Related Rules

This proceeding is an outgrowth of changes in the trucking environment brought about by the Motor Carrier Act of 1980, Pub. L. 96-296, 94 Stat. 793, particularly the diminished concern over the protection of traffic and revenues of individual certificated common carriers and the increased flexibility accorded private carriers under Section 9 of the Act. In Ex Parte No. MC-122 (Sub-No. 1), Implementation of Intercorporate Hauling Reform Legislation, (45 FR 45526, July 3, 1980) as required by Section 9 of the Motor Carrier Act of 1980, we implemented the law now permitting affiliated or separately incorporated wholly-owned members of the same corporate family or affiliated companies to provide for-hire transportation services within the corporate family or affiliated companies (compensated intercorporate hauling, or CIH), subject to certain conditions, without obtaining authority from the Commission. Specifically, the Motor Carrier Act of 1980 exempts CIH operations from Commission jurisdiction, subsequent to certain notice and publication requirements, where the participating companies are 100 percent owned by another company. As a substantive matter, Ex Parte No. MC-122 (Sub-No. 1) concludes that CIH operations performed by a subsidiary established for the specific purpose of providing for-hire transportation for their parent or corporate affiliates are exempt under the Act.

The changes made by the Act and the conclusions reached in Ex Parte No. MC-122 (Sub-No. 1) have caused us to consider whether, in light of the exempt nature of private carriage operations, we should modify our current policy prohibiting persons who do not hold operating authority from this Commission (e.g., owner-operators) from leasing their equipment with drivers directly to private carriers for the performance of private carriage operations, whether performed pursuant to the CIH regulations or not. We have instituted this proceeding specifically to address this issue. We solicit comments from carriers, shippers, and other interested parties.

Background

Under the existing scheme of regulation, a person must obtain operating authority from the Commission before engaging in most types of interstate for-hire motor carrier transportation. Private carriage operations are exempt from regulation under 49 U.S.C. § 10524(a) when "(a) the property is transported by a person engaged in a business other than transportation; and (2) the transportation is within the scope of, and furthers, a primary business (other than transportation) of the person." This distinction has caused careful scrutiny of operations to determine whether the transportation service actually performed is for-hire or private carriage.

In the leading Commission decision addressing this issue, *H. B. Church Truck Service Co. Com. Car. Application*, 27 M.C.C. 191, 195 (1941), the Commission stated that:

> Essentially, the issue is as to who has the right to control, direct, and dominate the performance of the service. If that right remains in the carrier, the carriage is for hire and subject to regulation. If it rests in the shipper, it is private carriage and not subject to regulation * * *.

The Commission noted that so-called leases of equipment by a carrier to a shipper are sometimes subterfuges and devices to evade regulation, particularly as to operating authority and rates. In order to protect its regulatory jurisdiction, it thus created the rebuttable presumption that such equipment leases would be considered for-hire transportation, subject to regulation. The Commission maintained that the presumption would yield to a showing that the shipper has the exclusive right and privilege of directing and controlling the transportation service. *Id*, at 196.

The Commission subsequently required that shippers not only "control" the transportation operation, but that they also assume, in significant measure, the characteristic burdens of the transportation business. The Supreme Court upheld the Commission's "burdens" test in *United States* v. *Drum*, 368 U.S. 370, 375 (1962), and affirmed the finding that owner-operators who had leased their equipment to the shipper were engaged in unauthorized for-hire contract carriage operations, despite evidence of genuine shipper control, because the shipper had shifted the actual burdens of the transportation service to the lessors. *Supra*, at 381. The Commission's "burdens" test, then, clearly went beyond the "control" test formulated earlier, and effectively precluded any arrangement whereby an owner-operator could lease both equipment and driving services to a shipper.

We believe that the "burdens" test is no longer necessary to achieve legitimate regulatory objectives in light of recent statutory changes. That test was articulated during an early period of motor carrier regulation as part of a comprehensive regulatory program designed to ensure a practical distinction between private and for-hire carriage. The Commission declined to

allow private carriers to engage owner-operators in order to ensure that the competitive relationship established between private and regulated carriers in the Motor Carrier Act of 1935 would not be altered in such a way as to encroach upon the established province of regulated carriers. In the Motor Carrier Act of 1980, Congress has plainly indicated that we should accord less concern to the existing traffic and revenues of individual companies while private carriers are to enjoy increased freedom in a way that will contribute to operating efficiencies and achievement of the goals set forth in the national transportation policy. This latter purpose is reflected in the exemption of compensated intercorporate hauling from economic regulation. In our view, there is no longer any regulatory need to retain a "burdens" test designed to restrict the flexibility of private carriage operations to the degree formerly required, on the one hand, and protect the enclave of common carriers, on the other. Indeed, in our view, such restraint on private carriers would tend to frustrate Congressional directives to accord that group increased opportunities for improved efficiency. At the same time, allowing private carriers to employ owner-operators under properly controlled circumstances will promote a more competitive common carrier sector consistent with the underlying thrust of the Motor Carrier Act of 1980.

We do, however, acknowledge the continued need to maintain a workable distinction between private and for-hire carriage. We propose to return to the original concept of "control", set forth in *Church, supra,* to achieve this distinction.

It is no longer apparent, for this agency's regulatory purposes, that the mere employment of owner-operators divests the private carrier of responsibility in derogation of the definition of private carriage. Under our regulations set forth at 49 CFR Part 1057, regulated carriers may properly augment their equipment fleets by leasing equipment and drivers from other carriers on a long-term or single-trip basis. 49 U.S.C. 10922(e)(3)(A): *American Trucking Associations* v. *United States,* 344 U.S. 298, 303–04 (1953). Authorized carriers availing themselves of the leasing regulations must maintain exclusive possession, control, use of and responsibility for the leased equipment. Private carriers, however, enjoy no such flexibility in augmenting their fleets. They may add to their fleets by renting vehicles only, and by obtaining vehicles from one source and drivers from a separate source. *Rittenhouse, Investigation of Certificate,* 78 M.C.C. 389 (1958); *Personnel Service, Inc. Et. Al.-Investigation,* 110 M.C.C. 695 (1969). But they may not supplement their fleets with equipment leased from owner-operators. *United States* v. *Drum, supra.* We see no regulatory purpose to be served by continuing this distinction of fleet augmentation between private and for-hire carriers, and believe that both classes of carriers can exercise proper control or responsibility over equipment leased with drivers.

The Supreme Court, in *Drum,* characterized our earlier decision as resting, in part, on the conclusion that to constitute valid private carriage, no party other than the shipper could have "*any* right to control, direct, and dominate the transportation." 368 U.S. at 381 (emphasis added). At the time *Drum* was decided, the Commission was far more concerned than we are today with ensuring that private carriers maintained a narrowly defined role in a heavily regulated motor carrier industry. Indeed, the Court's opinion recognizes this. The Commission properly read the for-hire definition broadly to ensure that private carriers could operate only where they exercised all the key elements of control. We believe, however, there is no longer any regulatory purpose to be served by maintaining an absolute requirement as set forth in *Drum,* and that control or responsibility can properly be shared between private carriers and owner-operators. No longer apprehensive that equipment leases could be surreptitious arrangements to evade our regulatory jurisdication as announced in *Church, supra,* we now believe that the use of owner-operators by private carriers would reflect an independent business judgment that such use constitutes a more efficient employment of a shipper's resources. Thus, a keystone of our prior policy has evaporated.

While we are not prepared to broaden the rights of private carriers to an unlimited degree, we are satisfied that the decision of private carriers to use owner-operators in lieu of establishing or augmenting their own fleets in more traditional ways may well involve sufficient indicia of of responsibility over the entire operation so as to constitute permissible private carriage. The spectrum of control contains a point at which the amount of control is so lax that beyond it is, for all intents and purposes, an area subject to Commission jurisdiction. We seek comments, therefore, from the industry which this proposed policy would affect, on the amount of control or responsibility which will allow owner-operator leasing to private carriers, yet also maintain a clear and practical distinction between private and for-hire carriage. Some indicia of responsibility which we believe would ensure an operation's legitimacy as private carriage would be the shipper's exclusive use and control of the owner-operator's equipment and services use and control of the owner-operator's equipment and services for the period of the lease; the shipper's assumption of variable costs of the transportation; liability in the event of loss; or requiring the shipper to bear the costs of safety and regulatory compliance. Related issues are the length of the lease; whether trip-leasing can or should be allowed; and whether to limit the number of shippers an owner-operator may serve.

In addition, there are certain implications of the proposal on which we believe public comment would be particularly helpful.

1. *Utility*—Privately-owned or leased truck fleets may represent a relatively substantial portion of corporate capital, management, and other resources. The Congressional mandate in the national transportation policy to promote competition and efficient transportation services to meet the needs of shippers and to allow for the productive use of equipment and energy resources, 49 U.S.C. 10101(a)(7), suggests that we explore the option of owner-operator leasing as a means of achieving those goals. The amount and types of benefits that could prospectively redound to existing private fleet operators would depend, of course, on a shipper's particular transportation requirements and the extent of private operations. Comments are sought on these and related issues concerning operators of private fleets.

2. *Commercial Lessors*—The Interstate Commerce Act, of course, recognizes the right of shippers to transport their own goods in bona fide private carriage. 49 U.S.C. § 10524(a). However, in many instances, the various arrangements which are made to accomplish this goal raise the question whether the shipper involved is actually engaged in bona fide private carriage or, rather, whether it is the recipient of for-hire motor carrier service. Many shippers operating their own equipment fleets do not own their vehicles but rather, for various business reasons, lease the vehicles from independent, non-carrier equipment leasing organizations. Drivers are employed by the shipper or are procured from a

separate and unrelated personnel source. In these situations, the shipper characteristically assumes the burdens of the transportation enterprise, and would properly be engaged in private carriage operations. *Drum, supra.* We seek public comment on whether our conclusions regarding owner-operators necessarily lead to the conclusion that commercial lessors may offer, in addition to equipment, drivers to lessees engaged in private carriage, without disturbing the principles upon which *Drum, Personnel Service, supra,* and related decisions rely.

3. *Effect upon owner-operators*—We contemplate that this proposal would have a salutary effect upon the owner-operator segment of the motor carrier industry. At the same time, we realize that individual owner-operators are perhaps the most ill-equipped of the potentially affected parties to comment on this proceeding. They are generally unfamiliar with the notice and comment process of administrative law, and do not have the facilities to direct their attentions to proceedings such as these. Nevertheless, we urge representatives of the owner-operator industry to file comments and to encourage individual owner-operators to participate.

Owner-operators, at public Commission conferences, have opposed Commission policy which precludes them from leasing their equipment directly to shippers. Such a policy, they conclude, prohibits them from becoming effective competitors for traffic. Their desire is to achieve the same efficiency of operations, productivity of equipment, and balance of operations that larger carriers strive to maintain. A policy allowing the leasing of equipment with drivers to private carriers would effectively place a new source of traffic at owner-operators' disposal. This could, in turn, preserve the integrity of the owner-operator sector in the overall scheme of motor carrier transportation by removing unnecessary regulatory impediments to achieving increased operating efficencies, increased revenues, greater fuel savings, and more productive use of equipment.

An additional yet pivotal issue concerns owner-operator employment status. In the regulated sector of motor carrier transportation, the leasee's assumption of exclusive possession, control, use of, and responsibility for the leased equipment does not normally disturb the equipment lessor's status as an independent contractor. Arrangements can be perceived, however, whereby an owner-operator could lease equipment to a private carrier and perform in-house transportation services, similar to the shipper's private carriage operations in which a driver was employed. The amount of control that may ultimately be required in order to legitimize private carriage operations conducted with owner-operators may raise serious questions, for the owner-operator and the lessee, concerning owner-operators' continued and commonly held status as independent contractors. Resolution of this issue will have a bearing on the extent to which owner-operators would be used by private carriers and shippers.

We see no reason why the leasing of owner-operators to private carriers should result in a change in status; leasing to common carriers, after all, does not convert independent owner-operators into employees. We nonetheless request comments on whether, through custom, practice, or arrangement, owner-operator lessors engaging in private carriage operations may experience a change in status from "independent contractor" to "employee".

4. *Effect upon Authorized Carriers*—Many authorized carriers have engaged the services of owner-operators exclusively or to augment their equipment fleets. Shippers commonly use authorized carriers, who in turn use owner-operators, either exclusively or for overflow traffic during peak periods to augment their own private fleets. If it is determined that owner-operators may lease their equipment to private carriers, then traffic normally handled by an authorized carrier may be diverted to the owner-operator who negotiates independently to transport a private carrier's frieght.

Comments are sought from authorized carriers explaining how and why traffic may be diverted from them, setting forth, with substantiation, any projected materially adverse effects. We stress, in this connection, that we should be alerted to *public* harm as opposed to simply private harm to individual firms. Carriers should also address other relevant issues that would arise in the promotion of competitive and efficient transportation services mandated by the national transportation policy. They must bear in mind that while freight transported by private carriers is exempt and could therefore be transported by owner-operators, authorized carrierrs would not be precluded from participating in the negotiations for and transportation of private freight.

Environmental and Energy Considerations

We do not believe that this request for comments or subsequent Commission action, if any, on these issues will have any significant impact upon the quality of the human environment. We do anticipate that further action will improve operating efficiencies, reduce empty mileages, and increase productivity of revenue equipment, thus contributing to the conservation of energy resources. In any event, we invite comments which identify significant effects this proceeding may have on either the quality of the human environment or conservation of energy resources.

This notice is issued pursuant to 5 U.S.C. 553.

By the Commission, Chairman Gaskins, Vice Chairman Gresham, Commissioners Clapp, Trantum, Alexis, and Gilliam.

Decided: December 19, 1980.

James H. Bayne,

Acting Secretary.

[FR Doc. 80-40445 Filed 12-30-80; 8:45 am]

BILLING CODE 7035-01-M

[Ex Parte No. MC-122 (Sub-No. 3)]

Interpretation—Intercorporate hauling

AGENCY: Interstate Commerce Commission.

ACTION: Petition for Declaratory Order.

SUMMARY: We have been asked to determine whether the exemption of Section 9 of the Motor Carrier Act of 1980 (Pub. L. 96-296, 94 Stat. 798) is available to certain types of companies. We believe that 49 U.S.C. 10524 (a) and (b) are interrelated so as to render the exemption of Section 9 unavailable to transportation firms and their subsidiaries. We propose, however, to allow affiliates of warehousing operations to perform private carriage service by reason of the intercorporate hauling exemption.

DATE: Comments are due on or before February 17, 1981.

ADDRESSES: Send an original, and, if possible, 15 copies of comments to: Ex Parte No. MC-122 (Sub-No. 3), Room 5416, Office of Proceedings, Interstate Commerce Commission, Washington, DC 20423.

FOR FURTHER INFORMATION CONTACT: Melvin B. Werner, (202) 275-7985, or Edward E. Guthrie, (202) 275-7691.

SUPPLEMENTARY INFORMATION: Section 9 of the Motor Carrier Act, exempts compensated intercorporate hauling (CIH) from licensing provisions otherwise applicable to for-hire motor carrier operations. Its terms, however, limit the applicability of the exemption to situations where the corporation providing service is a 100 percent owner of the company by or for which traffic is

being transported. Other provisions require notification to the Commission, publication of the notice in the Federal Register, and carrying of the notice in the cab of vehicles performing CIH service.

On July 3, 1980, the Commission published a notice of interim rules implementing the CIH provisions of the Act in Ex Parte No. MC.122 (Sub-No. 1) (45 FR 45526). That notice requested comments on the suitability of the proposed rules as final implementing regulations. Several comments raised substantive questions which it did not appear appropriate to consider in a proceeding dealing essentially with procedureal matters. One comment, filed by Cape Air Freight was framed in the alternative as a petition for a declaratory order concerning possible limitations on the CIH exemption. This pleading raises questions of statutory interpretation which will be described below.

The question posed in the Cape petition is whether a carrier, particularly an air freight forwarder or airline, may "spin-off" a 100 percent-owned trucking company established to provide service for the parent carrier under the CIH provisions of the Act.[1] Other comments have, more hypothetically, inquired whether such a course may be followed by non-carriers, such as warehouses, which control freight but are not themselves able to perform transportation as unregulated, private carriers. See *I.C.C.* v. *V.S.C. Wholesale-Warehouse Co.*, 312 F. Supp. 542 (S.D. ID 1969).

In the petition for declaratory order Cape Air Freight posits that various regulated carriers are in the business of providing alternate, surface transportation for air carriers and their frequently affiliated forwarders. It observes that if air carriers are found able to perform surface service under their own corporate umbrellas without becoming subject to ICC regulation, the operations of independent, regulated carriers stand to be adversely affected.

We conclude that affiliates of carriers operating in the air transportation mode are not subject to the CIH exemption. We recognize that combined air and surface capability within the same company would increase the flexibility of the transportation system to the likely benefit of users of air freight services. At the same time, we are not concerned that improvements in the intermodal capability will adversely affect regulated carriers since, on balance, we see no public harm flowing from such redistribution of existing traffic. Our determination flows from our belief that Congress has not seen fit to extend the CIH exemption to companies whose principal business is the provision of transportation.

We note that the CIH exemption is codified at 49 U.S.C. 10524(b). The prior subsection, 49 U.S.C. 10524(a), embodies the so-called "principal-business" test which allows private carriage operations to be performed only when such operations are in furtherance of some primary, *non-transportation* enterprise. In view of the inclusion under the same code section of the "primary business" standard and the CIH exemption, we believe that 49 U.S.C. 10524(a) must be complied with before the exemption in subsection 10524(b) applies. Where an air freight forwarder or other non-regulated transportation entity is the parent of a separate motor carrier this test would not be satisfied.

We further believe that the concurrent adoption in the Motor Carrier Act of 49 U.S.C. 10526(a)(8)(B) supports our interpretation. That provision exempts from our regulation transportation of passengers or property by motor vehicles, "as part of a continuous movement, which has been or will be transported by an air carrier." By having specifically exempted such continuous operations, and also having exempted emergency substitute service in 49 U.S.C. 10526(a)(8)(C), it appears that it is not within the legislative intent to authorize those operating within the mode of air carriage freely to substitute surface operations for movements by air, without those operations becoming subject to Commission scrutiny.

As a consequence, we conclude that affiliates of carriers operating in the air transportation mode are not subject to the CIH exemption. We request comments on that view and on the related questions which follow: (1) Would such a finding apply equally to motor carriers affiliated with carriers operating in other modes (e.g. rail, water)? (2) Should specific regulations be adopted to preclude the filing of CIH notices provides for in 49 U.S.C. 10524(b)(1), (2) and (4), by firms which are engaged only in transportation operations? and (3) If so, what form should such regulations take?

We turn now to the other question framed in comments in Ex Parte No. MC-122 (Sub-No. 1), of whether non-transportation businesses, such as warehouses, may set up affiliates to move their freight under the CIH exemption. In *I.C.C.* v. *V.S.C. Wholesale-Warehouse Co., supra,* it was determined that warehouses in particular, could not engage in private carriage, because of the requirements of then 49 U.S.C. 303 (c) [now 49 U.S.C. 10524(a)] that such operations be both in furtherance of a principal or primary non-transportation enterprise, and also, within the scope of such activities. Under the facts presented, the transportation of freight for patrons was found to constitute for-hire, contract carriage, as defined in then 49 U.S.C. 303(b)(15).

The facts in the *V.S.C.* case are sufficiently germane to warrant restatement here. In that proceeding, the warehouse operator maintained a truck fleet with which it transported exempt produce in interstate commerce. It also moved nonexempt traffic between its various storage locations, assertedly to enable it to meet customer delivery instructions in a more responsive manner. While the advantages of the transportation service to patrons of the warehouse were implicitly recognized, the principal purpose of the operations was found to be that of repositioning equipment used in exempt haulage. The Court specifically concluded that while these operations made defendant's carrier service more efficient, this factor did not warrant finding the nonexempt service within the *scope* of the warehousing business in which it was engaged.

It is our view that it would now be proper to hold that such carrier operations are within the scope of a primary non-transportation business. We note that all of the various entities involved in moving goods and products from their source to the ultimate market must provide a broader range of services to enhance the efficiency of the overall transportation system. We believe that warehouses should be able readily to reposition stock of their clientele while in their possession by means of interstate hauling, and that we should facilitate these operations whenever possible. Comments of interested parties should address the question of whether this premise is correct, and provide data in support, if possible.

We observe that a finding that motor transportation by warehouses is within the scope of a non-transportation business would not be contrary to the legislative intent prompting Congress to adopt the "primary business" standard. This provision was largely corrective in nature, with its objective being to bring

[1] Our notice of interim rules in Ex Parte No. 122 (Sub-No. 1) observed that under section 9, it would be proper for shippers to establish separate transportation subsidiaries to provide exempt, CIH service. previously such operations had been considered subject to regulation, and required a license from this Commission. See *Schenley Corp.* v. *United States*, 326 U.S. 432 (1946).

an end to many clandestine transportation operations being conducted under the guise of private carriage. See *Church Point Wholesale Bev. Co.* v. *United States*, 200 F. Supp. 508 (W.D. LA 1961), citing Senate Report No. 1647, 85th Cong. 2d Sess. 523–525 (1958). The particular services to which the provision was directed involved "buy-sell" transactions which imparted a misleading appearance to the operations being performed. Warehouses providing transportation services have not historically engaged in such practices, and it appears that extending the primary business test to their operations may have been more to insulate regulated carriers from competition than to protect the public from unscrupulous operators. While such insulation may have once been a valid regulatory objective, it clearly is no longer in light of the Motor Carrier Act of 1980.

In addition to discussing the matters set out above, comments should identify what, if any, significant effect this proceeding may have on either the quality of the human environment or conservation of energy resources.

(49 U.S.C. 10101, and 10321 and 5 U.S.C. 554(e))

Decided December 19, 1980.

By the Commission, Chairman Gaskins, Vice Chairman Gresham, Commissioners Clapp, Trantum, Alexis, and Gilliam. Commissioner Gilliam concurring with a separate expression. Commissioner Clapp concurs in part and dissents in part and will submit a separate expression at a later date.

James H. Bayne,

Acting Secretary.

Commissioner Gilliam concurring:

While we are only seeking comments here on whether motor carriers affiliated with carriers operating in other modes (e.g. rail, water) are subject to the CIH exemptions, it is my opinion that they are not. We make this conclusion relating to motor carrier affiliates of carriers operating in the air transportation mode. Section 10524 of the Motor Carrier Act of 1980 specifically states that to be eligible for the exemption, the "property is transported by a person engaged in a business other than transportation." I do not know how we can logically conclude that rail and water carriers are not primarily engaged in transportation.

In addressing the question of whether a person engaging in a warehousing business is subject to the CIH exemption, parties should address the question of whether a warehousing business meets the definition of a "motor private carrier" that must be the *owner, lessee,* or *bailee* of the property being transported. It is also important that we receive comments concerning how such an exemption for a "warehouse" would affect our regulation of freight forwarders.

[FR Doc. 80-40446 Filed 12-30-80; 8:45 am]
BILLING CODE 7035-01-M

INTERSTATE COMMERCE COMMISSION

49 CFR Parts 1002, 1003, 1011, and 1100

[Ex Parte No. 55 (Sub-No. 43)]

Rules Governing Applications for Operating Authority

AGENCY: Interstate Commerce Commission.

ACTION: Final rule.

SUMMARY: This document adopts final rules which govern applications for operating authority filed with the Interstate Commerce Commission. The rules modify the Commission's permanent authority procedures governing the issuance of certificates, permits and licenses to motor and water carriers, freight forwarders, and brokers to speed up administrative processes. Interim rules were adopted at 45 FR 45534, July 3, 1980, and amended at 45 FR 80109, December 3, 1980. Comments were requested on their suitability as final rules. These rule changes are made necessary by the Motor Carrier Act of 1980, which altered entry standards for motor carriers of property, and which imposed statutory deadlines on non-rail proceedings.

DATES: Applications affected by these rules: Applications filed on or after February 9, 1981 will use these rules. Applications filed between July 3, 1980, and February 9, 1981, will continue to use the imterim rules.

FOR FURTHER INFORMATION CONTACT: Obudsman's Office—202-275-7440, Peter Metrinko—202-275-7805, Edward E. Guthrie—202-275-7691.

For copies of these rules: Office of the Secretary 202-275-7307 or 800-424-5230.

SUPPLEMENTARY INFORMATION:

Appropriate Application Form

Applications under these final rules shall be filed on the modified OP-1 form dated 1-81.

Topic Index

A. Introductory Matters

1. Background
2. Handbooks to guide applicants and protestants
3. Terminology and renumbering

B. Major Issues

1. The case-in-chief format
2. Adequacy of 45-day time limit for protests
3. Proper notice to applicant under 5 U.S.C. 554(b)
4. Restrictive amendments
5. Applicants' threshold burden—motor carrier proceedings
   a. Guidelines for the processing of opposed cases
   b. Status of unopposed cases
6. Oral hearings
   a. Content of oral hearings
   b. Notice of oral hearings
7. Supporting evidence in motor common carrier cases
8. Prior Commission policy statements which affect the application process
   a. Related issues in a single application
   b. New evidence in rebuttal statements
   c. Operational feasibility
   d. "Toto" policy—imposition of conditions
   e. Rule of eight
   f. Solicitation of withdrawal of shipper support by protestants
   g. Ex Parte No. MC-121
   h. Extensions of time
   i. The issue of rates in application proceedings
9. Elimination of notarization requirement
10. Deletion of financial information
11. Passenger carrier interests

C. Miscellaneous Matters

1. Petitions to modify
   a. Petitions for correction
   b. Petitions for clarification or interpretation
   c. Petitions to modify permits under 49 CFR 1002.2(d)(8)
2. Changes to the application form
3. Caption summary examples
4. Pack-and-crate applications
5. Property broker applications and property broker affiliations
6. Requirement that applicant describe circumstances why community not regularly served
7. Obtaining copies of the application from the applicant
8. Limited time to reply
9. Consolidation of separate applications
10. Page limitation on abstract of protestants' authorities
11. Speedy service of decisions
12. Carriers who wish to join their existing authority with the requested authority to provide a through service
14. Service of motions by protestants
15. Is Federal Register notice sufficient for potential protestants? Serving notice of applications on all truckers.
16. Notification to the Commission of erroneous Federal Register publication.
17. Qualifications for protesting.
18. Duplicative operating rights.
19. Discovery under the adopted rules.
20. Further supplementation of evidence prior to Federal Register publication.
21. Equipment list summary.
22. Unnecessary documentation in general.
23. Filing of separate fitness only applications.
24. Marking envelopes to identify type of pleading.
25. Copies.
26. Comments that were not addressed.
27. Oral argument request.
28. Environmental and energy considerations.
29. Adoption of rules.
30. Appendix A—final application rules.
31. Appendix B—new application form.
32. Appendix C—flow charts of former and final rules.

Background

The Motor Carrier Act of 1980 ("Act") made many changes in the law which governed the Commission's activities. Most of these changes related to the law governing motor carriers of property. Significantly, however, 49 U.S.C. 10322 adopted statutory time limits for the processing of applications, as set forth in the previous notice. In brief, in modified procedure cases, we must issue an initial decision 180 days after the application is filed. In orally heard cases, 270 days are allowed for the initial decision, of which 180 days may be used for the completion of evidentiary proceedings.

The Commission adopted interim rules to handle operating rights applications filed immediately after the passage of the Act. Since that time, in addition to receiving many comments, we have gained much experience in the daily use of the rules. This experience, coupled with the public comments, warrants modifications in the rules. The final rules are listed in Appendix A. The rules are substantially similar to the ones proposed. However, a number of minor modifications have been made to clarify rules or ease the paperwork burden on the public. Persons practicing before the Commission are especially urged to examine the changes carefully in order to avoid case processing problems.

Handbooks to Guide Applicants and Protestants

In addition to these rules, the Commission will soon issue booklets to guide potential applicants and protestants. The availability of these booklets will be announced in the Federal Register and through other appropriate outlets.

These booklets will provide a complete guide to participants in the operating rights application process. For example, information will be provided on post-decision compliance requirements. We considered providing some of this information in the rules themselves, but decided that the rules would have become unnecessarily detailed with information outside the application process itself.

Terminology and Renumbering

To avoid confusion in our discussions, please note the following:

The "former rules" or "former procedures" means those in effect for applications filed prior to passage of the Motor Carrier Act of 1980, which were superseded by the "interim rules" published in the Federal Register of July 3, 1980, at 45 FR 45534 (1980). The "final rules" are those being adopted in this decision and notice.

The term "fitness only" applications replaces "fitness related" applications.

The discussion of the interim rules will refer to the numbering used in the July 3, 1980, Federal Register publication, which numbered the parts as follows:

§ 1100.247(A)—How to Apply for Operating Authority
§ 1100.247(B)—How to Oppose Requests for Authority
§ 1100.247(C)—General Rules Governing the Application Process

Subsequent to this publication, however, the Federal Register required that we change our numbering (45 FR 64958, Oct. 1, 1980). The final rules will use the following numbering:

§ 1100.251—How To Apply for Operating Authority
§ 1100.252—How To Oppose Requests for Operating Authority
§ 1100.253—General Rules Governing the Application Process

The "Case-in-Chief" Format

A number of parties object to the "case-in-chief" format.[1] A basic objection is the belief that the time limits imposed by 49 U.S.C. 10322 can be met by more expedited internal handling and a restructuring of times when statements are due.

We find none of the many submitted alternatives suitable. In each instance, times for the numerous steps which composed the former procedures are so compressed as to be unworkable. The Motor Carrier Lawyers Association (MCLA), for example, states that the interim rules are a "telling admission of regulatory inefficiency" (MCLA, p. 15). Typical of the alternative approaches suggested, it would give the Commission 45 days from the date the applicant's rebuttal statement is received by the Commission to serve the initial decision.

The former procedures' and interim procedures' basic steps and projected use of time are outlined in the chart set forth in Appendix C.

The chart details what the median decision time frames were under those procedures. Clearly the Commission under the old format could not meet the new deadlines. Some change from those procedures is necessary. The issue, therefore, is how to allocate between the Commission and the public that portion of the 180-day statutory period that is somewhat discretionary. We believe it is reasonable to give the Commission somewhat more time to process applications than is accorded private litigants. The Commission, unlike private litigants, may not choose whether to participate or not in particular cases depending upon the relative interest in the given case.

We must process and keep proper records for all applications. The complexity involved in accomplishing this task, which may not be well known to private parties, is detailed in Appendix C to this decision.[2] Furthermore, our procedures must be designed to permit us to accomplish our business within the initial statutory deadline in the great majority of cases even though we may not consume the allotted time in a given application. We have not, we might add, drafted our regulations in order specially to accommodate the most complex cases. We are confident that, with extraordinary effort in specific cases, we will be able to meet the statutory deadline even in the most complex situations.

Our experience since July has been favorable. By and large, private parties have met the timetables we established on an interim basis and we have been able to meet the statutory deadlines in all cases to date. Admittedly, the number of cases processed to final decision since July has been small. Our procedures, moreover, are not set in stone. We are prepared to review them in light of the experience gained over the next several months in order to determine whether (i) the time available to private parties is sufficient, and (ii) the time allowed for decisionmaking at the Commission is unnecessarily long. We can adjust the allocation of time if circumstances warrant. We do not wish to upset this procedure by modifying the allocation of time in the ordinary case.

Adequacy of 45-Day Time Limit for Protests

Many persons argue that the 45-day time limit provided for protests is inadequate; some suggest 60 days would be an appropriate figure.

Typical of those comments are the ones submitted by Central Freight Lines, Inc., *et al.*, which assert that this is not enough time to gather the specific traffic data that is needed. This is especially true because the new rules "require" the protestants to provide the information set forth in interim rule 1100.247(B)(d)(4). These persons believe that this is an oppressive rule amounting to a denial of due process. They assert that applicants have an unlimited amount of time to prepare an application, and that fairness dictates that a comparison of the situations requires an extension.

We believe that 45 days is sufficient time to protest an application. After all, this is 25% of the total time in the initial decision stage of the process.

First, protestants are not operating from "scratch" when they see an application in the Federal Register. Many protestants have developed their traffic data representations so that they can readily extract such information. And, while an applicant has to do original research on its application, protestants have a finite, known body of financial and operational data with which to work. Many of the items supplied by the protestant do not change from case to case, e.g., service capabilities, equipment lists, etc.

Finally, we hasten to add that following the factual evidence *format* is the only *requirement*. Protestants are free to present whatever data they wish. The format is nothing more than a guide, and a protestant can present any argument or data that it wants to. The guideline is merely an attempt to help protestants structure their evidence, and also a device to help us analyze it more quickly.

Is applicant deprived of an opportunity for proper notice under section 554(b) of the Administrative Procedure Act (APA) since it cannot know the extent of its opposition at the time it files its evidence?

The MCLA contends that the interim procedures violate fundamental due process. The rules, they argue, deprive an applicant of the opportunity fairly to present its position by requiring it to file its evidence in support of its application before interested parties are allowed to submit protests. The Association asserts that a similar proposal to revise the application process by requiring an applicant to file a so-called "case-in-chief" at the outset of a proceeding was

[1] So-called because of an earlier Commission proposal called "case-in-chief", developed in Ex Parte No. 55 (Sub-No. 14), and rejected in large part in *Revision of Application Forms*, 125 M.C.C. 790 (1976). The two cases are much different, however. The major objections of the Commission against adoption were (1) applicant would face increased costs since it would have to serve copies of its evidence on all parties who submitted "protests" (not including protestants' verified statements, however); and, (2) applicant's inability to discover existing services, linked with its burden of proof to meet the second part of the three-part test in *Pan-American Bus Lines Operation*, 1 M.C.C. 190, 203 (1936).

These objections have been removed, since an applicant no longer has the "adequacy of existing service" burden of proof. Further, our different version of case-in-chief requires the opposition to file its entire case, which makes frivolous protests unlikely. Applicant is partially remunerated for copying costs in our rules. Finally, all choices of an application system require compromises and trade-offs. The 180-day time limit cannot, however, be compromised.

[2] The public should also be aware that we are handling our growing case load with fewer employees. In fiscal year 1976 the Commission's 2,125 employees handled 8,857 proceedings. Presently we handle over 25,000 proceedings with a staff of 1,843.

found by the Commission to violate an applicant's opportunity for proper notice as required by Section 554(b) of the APA. See *Revision of Application Forms, supra.* They contend that the basis for rejecting the "case-in-chief" requirement at that time remains valid under the Motor Carrier Act of 1980, in that the prima facie showing of need which is still required of an applicant may not be established in certain instances without the applicant properly addressing issues respecting existing services. The Commission, it urges, should retain the existing licensing procedures, allowing protestants to respond to the notice of an application before an applicant submits its statements, in order to encourage and ensure the presentation by applicant of a complete record.

I. The notice requirement of 5 U.S.C. 554 of the APA and its applicability to the Commission's proceedings

It has long been held that an application of a motor carrier for a certificate of public convenience and necessity is the type of adjudicatory proceeding to which the notice requirements of Section 554 apply.[3]

Section 554(b) provides in relevant part:

(b) Persons entitled to notice of an agency hearing shall be timely informed of:

(1) The time, place, and nature of the hearing;

(2) The legal authority and jurisdiction under which the hearing is to be held; and

(3) The matters of fact and law asserted.

When private persons are the moving parties, other parties to the proceeding shall give prompt notice of issues controverted in fact or law.

Commission regulations provide, first, that notice to interested persons, including competitors, be provided by publication in the Federal Register of an accurate summary of the authority sought.[4] The applicant is required to make known the entire scope of its application to ensure the adequacy of the required notice. What is required essentially is that potential protestants be given a reasonable opportunity to know the claims of adverse parties and an opportunity to meet them.[5]

Applicant, in turn, is entitled to "prompt notice" of the issues in fact or law controverted by interested persons. Protestants' filings in opposition, when served upon applicant, provide that notice.[6] Existing Commission regulations provide for this notice in the form of protests which must be filed within 45 days of the Federal Register publication, and in which the protestant must specify those matters in controversy.

MCLA's contentions, in fact, go not to the notice requirements of the APA, but rather to the fairness of the procedures adopted. An applicant is entitled to file an answer or other form of *responsive pleading*, and the Commission's rules so provide,[7] but an applicant is not "entitled" to know the protestant's anticipated contentions before submitting initial evidence. While it might be marginally helpful to an applicant to be knowledgeable of the issues protestants intend to raise, before submitting its evidence in support of the application, applicant is entitled under Section 554 only to a "response" to protestants' pleadings.

Commission regulations provide for the filing by applicant of a reply to any protests, ensuring that applicant is given the opportunity to sustain any issues in its application which protestants controvert.

II. The applicant's opportunity for a "fair hearing" under the revised licensing procedures proposed pursuant to the Motor Carrier Act of 1980

The Commission, in *Revision of Application Forms, supra,* at 818–20, rejected a proposal to require an applicant to submit with its application all of the evidence upon which it intends to rely. It viewed the provisions of Section 554(b) and 554(c) together and concluded that, in examining the fairness and feasibility of the proposal in terms of an applicant, the proposal was not in the public interest. The Commission examined the statutory provision and prevailing interpretations and noted that the determinative considerations, as set forth in *Pan-American Bus Lines Operation,* 1 M.C.C. 190, 203 (1936), require consideration of the adequacy of existing services. It concluded that an applicant would be better able to address fully the requirement once opposing carriers were made known to it.

The statutory provisions at 49 U.S.C. 10922 and the determinative considerations governing applications for motor carrier authority have been altered significantly in recent months.[8] While part (a) retains the controlling standard of "public convenience and necessity" for applications by passenger carriers, the policy enunciated in Ex Parte No. MC–121, *Policy Statement on Motor Carrier Regulation,* 44 FR 60296 (1970), states that the adequacy of existing service is no longer a factor in considering those applications.

Motor carrers of property are governed by the changes brought about in section 5 of the Act. We believe that "adequacy of existing service" is no longer a factor to be considered in determining whether a property motor carrier applicant has made a threshold case. Once having determined this, it is clear that these former objections to adoption of a case-in-chief approach are eliminated, since applicant will not have to prove something which is more fully within the knowledge of existing carriers.

In motor common carrier cases, the Act instructs the Commission that diversion of revenue or traffic from an existing carrier is not in and of itself inconsistent with the public convenience and necessity, 49 U.S.C. 10922(b)(2)(B). It is clear that Congress has required us to go beyond the Commission's historic approach to entry, which included evaluating adequacy of existing service. Here, Congress is stating that existing service may be perfectly adequate and recognizes that a new operation may draw traffic away from existing carriers, but nonetheless instructs us to grant applications unless public harm is shown. This is consistent with the House Report's language that increased competition and potential competition will bring about the best "delivery of transportation service to the public."[9] Thus, not only is adequacy of existing service not an issue in applicant's establishing a threshold case, but it is not a significant issue in the case at all.

In the contract carrier area, an issue that remains for consideration is the effect a denial of the permit will have on the applicant or the shippers. This may technically be seen as requiring somewhat of an evaluation of adequacy of existing services, but it is not an evidentiary burden for the applicant. Numerous Commission cases have granted applications for contract carrier authority where this was a "neutral" factor. It is not a significant evidentiary hurdle for the applicant. Finally, applicant will have knowledge of adequacy of existing services for shippers it seeks to serve under contract, based on its assessment of needed services in the shipper-applicant discussions prior to submittal of the application. It is only in the common

[3] *North American Van Lines, Inc.,* v. *I.C.C.,* 386 F. Supp. 665 (N. D. Ind. 1974)

[4] See final rule 1100.251(j)(2).

[5] *North Alabama Exp., Inc.,* v. *United States,* 585 F.2d 783 (5th Cir. 1978).

[6] See final rule 1100.252(b)(2).

[7] See final rule 1100.251(o).

[8] H.R. Rep. 96–1069, 96th Cong., 2d Sess. 13–15 (1980).

[9] House Report, Id., at 14.

carrier area (which involves services to the general public, often over a broad territory) that the lack-of-notice issue as to adequacy of existing services becomes even a theoretical problem.

No other form of application handled by the Commission requires the applicant to discuss initially the adequacy of existing services, as can be seen in the major broker, forwarder, and water carrier cases cited in the prior notice.

In view of the varied considerations on which the Commission may find that applicant's operation will serve a useful public purpose, responsive to a public demand or need,[10] the elimination of adequacy of existing service as an issue in all motor carrier application proceedings, and the opportunity for rebuttal afforded applicant, we no longer believe that our prior concern over the lack of notice is warranted. Applicant under these final rules will be able to submit a complete record at inception to establish a threshold case, to rebut controverted evidence, and to be otherwise assured of a fair hearing.

Restrictive Amendments

The interim rules forbid the use of restrictive amendments. We adopt that approach for the final rules.

Our prior decision gave several reasons for ending this practice. We agree with the contentions of some parties that we might possibly work the amendment practice into our process without undue delay being caused, but further reflection leads us to conclude that the practice serves no useful purpose and would not be in the public interest.

While we have fully considered the comments of the parties on this issue,[11] we believe the parties overlook the import of the new motor carrier entry section of the Act and the Commission's public interest function in the licensing process for all types of authority. In a motor common carrier of property case, once applicant carries its threshold burden, the burden of proof shifts. In other words, once the application is published, the Commission has preliminarily determined that the burden has shifted, and has found that the proposed service will serve a useful public purpose, responsive to a public demand or need. At that point, the restrictive amendment process serves no public interest purpose. It is up to protestants to present substantial evidence to meet their burden of evidence and proof. While the determination of the threshold case is subject to re-examination, there is less reason, as a practical matter, for the applicant to accede to a request for a restrictive amendment, since, without a substantial evidentiary showing by protestants, it will have won its case.

The MCLA argues that if an applicant has no intention of providing a certain type of service, the Commission should not impose "its bureaucratic will on the carrier by refusing to entertain a narrowing of a service proposal." This construction of our rules misconceives our purpose. We expect that, in preparing its application, the applicant will have made a reasoned business decision as to the demands for service and the nature of the operation it can perform, now and in the future. It will have filed evidence in an effort to demonstrate that the public purpose will be served by its proposed operation. Allowing other parties to attempt to narrow this proposal through the threat of continued litigation is counter to the public interest. If opposing parties believe that the public interest will best be served by a narrowing of the grant of authority from that proposed, they can file protests to the application demonstrating these views. As to all types of applications, we stress that Congress has entrusted the Commission to analyze evidence and arrive at a correct assessment as to the needs for additional service or competition, including whether an application should be only partially granted. The restrictive amendment process in actuality distorts this reasoned analysis, because it encourages protesting parties to coerce an applicant into accepting a fragmented grant of authority when the applicant is willing to offer the public a broader service.

MCLA also argues that Section 554(c)(1) of the Administrative Procedure Act specifically allows parties to make offers of settlement.

Section 554(c) provides, in relevant part:

(c) The agency shall afford all interested parties opportunity of:

(1) The submission and consideration of facts, arguments, offers of settlement, or proposals of adjustment when time, the nature of the proceeding, and the public interest permit; and

(2) To the extent that the parties are unable so to determine a controversy by consent, hearing and decision on notice and in accordance with sections 556 and 557 of this title.

It is important to understand the purpose of this APA provision. The whole purpose of the provision is to eliminate costly and lengthy proceedings in those cases where the parties are able to reach a resolution of their own which the agency finds compatible with the public interest.

The legislative history accompanying this section recognizes this provision as being of the greatest importance to the efficient functioning of the administrative process.[12]

Considering the settlement provision in S. 7, 79th Cong., 1st Sess. (1945), which ultimately became Section 554(c) of the Administrative Procedure Act, the Senate Judiciary Committee stated:

> Subsection (b) (now Section 554(c) of the Administrative Procedure Act) provides that, even where formal hearing and decision procedures are available to parties, the agencies and parties are authorized to undertake the informal settlement of cases in whole or in part before undertaking the more formal hearing procedure. Even courts through pretrial proceedings dispose of much of their business in that fashion. There is much more reason to do so in the administrative process, for informal procedures constitute the vast bulk of administrative adjudication and are truly the lifeblood of the Administrative process * * *. The statutory recognition of such informal methods should both strengthen the administrative arm and serve to advise private parties that they may legitimately attempt to dispose of cases at least in part through conferences, agreements, or stipulations. It should be noted that the precise nature of informal procedures is left to development by the agencies themselves.[13]

However, it is clear from the statute that there are certain qualifications to the settlement provision. The Attorney General's Manual on the Administrative Procedure Act (1947) is instructive on these limitations. The requirement that agencies provide such opportunities is limited to cases where "time, the nature of the proceeding, and the public interest permit." The quoted language is to be treated in the alternative, however. The "nature of the proceeding" may include those situations where statutes require that hearings be held in any event.[14]

---

[10] See, for example, *Art Pape Transfer, Inc., Ext.—Commod. in End-Dump Vehicles*, 132 M.C.C. 84, 93–94 (1980).

[11] Major contentions include: The practice will not delay case processing; if the Commission believes the amendment is being used to eliminate opposition at the expense of the public interest, it can reject the amendment; many amendments are offered at the insistence of the supporting party; it will lead to applications overly broad in scope; inexperienced parties will mistakenly apply for overly broad authorities; allowance of the practice leads to unopposed cases; the practice allows applicant to reassess public need; and, protestants with strong interests will have to litigate instead of using the amendment process to make applicants reduce their requests.

[12] Senate Judiciary Committee, Administrative Procedure Act—Legislative History, S. Doc. No. 248, 79th Cong., 2d Sess. 203 (1945).

[13] S. Doc. No. 248, *supra*, note 4, at 24.

[14] On this point, the Manual refers to the Civil Aeronautics Board requirement that hearings be

Footnotes continued on next page

Where any agency believes that the informal settlement will not accomplish the ultimate purpose of the proceeding, such as future compliance with the law, it would be justified in concluding that settlement by consent would not be in the public interest.[15]

The Attorney General's statements are supported by the legislative history. Despite the language which states that agencies would be required to state settlement procedures in their rules, it is clear that Congress did not intend that parties should be granted an absolute right to make settlement offers.[16] Referring to the qualifying language in section 554(c), limiting application to cases in which "time, the nature of the proceeding, and the public interest permit," the Senate concluded:

> It is intended to exempt only situations in which, for example, (1) time is unavoidably lacking, (2) the nature of the proceeding is such that, for example (as in some forms of rulemaking), the great number of parties or possible parties makes it unlikely that any adjustment could be reached, and (3) the administrative function requires immediate execution in order to protect the tangible and demonstrable requirements of public interest.[17]

* * * * *

The intent of the provision, rather, is to streamline cases in the administrative process within the confines of the public interest. Under the procedures outlined in this proceeding, we have accomplished substantial streamlining of the process, and little benefit would accrue as a result of allowing restrictive amendments.

We will assume, for sake of argument, that in a given case, all protestants would drop out if a settlement were reached. However, to accord proper notice to the public and allow a suitable time for response to notice of the application, the Commission must in any event wait 45 days from Federal Register publication to see what interested persons oppose the application. This will occur whether or not any individual settlements have been reached. If at this point the protestants and applicant were to submit pleadings which indicated settlement, the Commission would still have to consider the acceptability of the amendment, and arrive at a decision, regardless of whether the persons interested in opposing the application submitted formal pleadings and became parties. While the decision as to the acceptability of the restrictive amendment can be fairly easy, a greater problem remains. The public interest requires that we continue to examine the needs of the public without regard to the technical acceptability of the amendment, so an evidentiary examination by the decisionmaker would still be required.[18] Since we would be required to analyze the completed record, little time would be saved by the process.

It is well established that the Commission must reject restrictive amendments where the public interest dictates.

A major consideration must be whether the public interest precludes consideration of restrictive amendments. We conclude that the public interest requires that we listen to all parties' arguments, unfettered by the restraints of compromise and fear of litigation.

We believe that in all types of applications handled under these rules, the evidentiary standards have evolved to the point that competition is seen to be in the public interest. While our discussion will center on motor carrier of property applications, the most common type of case handled under these procedures, a look at the entry standards in all other types of applications will show similar trends. It should also be remembered that the entry standard for motor common carrier applications has always been considered to be higher than for other types of applications. We believe that the restrictive amendment process has the same debilitating effect on all types of applications filed under these rules.

We believe that the Interstate Commerce Act, as revised by the Motor Carrier Act of 1980, requires us to assess the benefits of competition in our motor carrier application cases. Competition is generally presumed to be in the public interest, not contrary to it.[19]

In examining the concept of what is in the public interest, it has been stressed in the Act that broad service authorizations are favored in the motor carrier area. The Act directs the Commission to eliminate existing restrictions, gateways, and circuitous routes. It provides that the Transportation Policy with respect to the motor carrier industry is to promote competitive and efficient transportation services. Restrictive amendments compromise these goals.

Restrictive amendments have also tended to reduce competitive operations, rather than enhance them. Such amendments do not allow for maximum utilization of equipment and energy resources, nor do they enable carriers to provide the range of service that would ultimately benefit the public. As was pointed out in our first decision in Ex Parte No. 55 (Sub-No. 43), many carriers simply protest applications in order to pressure an applicant into reducing its broad request for authority. The end result is that the granted authority simply does not reflect the goal of service that is "responsive to a public demand or need." Such negotiations between carriers on restrictive amendments are tantamount to agreements not to compete. The Commission adheres to the statutory and judicial pronouncements that competition is in the public interest. We believe our mission is to further the public interest, not the private interest of any particular carrier.[20]

Additionally, the "nature of the proceeding" qualification language in Section 554(c) may preclude negotiations where the statute requires that hearings be held in any event.[21] The Commission is required to examine individual requests for all types of operating authority, and provide appropriate persons an opportunity to oppose an application.

Applicants' Threshold Burden—Motor Carrier Proceedings

The American Trucking Associations, Inc., and specified affiliated conferences (ATA) urge that we establish criteria for the prima facie case. ATA contends that it is imperative that the Commission deal with the issue of prima facie criteria now, since it should give guidance to applicants for operating authority. We agree that it is useful to offer general guidance at this time. We believe it is best, however, to develop policy on this issue in actual proceedings, and proceed on a case-by-case basis. Our first analysis of this issue is contained in *Pre-Fab Transit Company Extension—General Commodities*, 132 M.C.C. —— (1980).

Additionally, we believe we should discuss guidelines for the processing of opposed and unopposed cases. These sections follow.

Footnotes continued from last page
held before granting a certificate of public convenience and necessity for a new route, which seems analogous to this Commission's function. *Manual, supra*, at 49.

[15] *Id.*, 49–50.

[16] S. Doc. No. 248, *supra*, note 4, at 261.

[17] *Id.* at 203.

[18] *Producers Transport, Inc., Extension, Asphalt Emulsion*, 86 M.C.C. 323 (1961); *Convoy Co., Extension—Arizona*, 91 M.C.C. 461 (1962); *Barrett Mobile Home Transit, Inc., Extension-Buildings*, 128 M.C.C. 73 (1976).

[19] *May Trucking Co.* v. *United States*, 593 F.2d 1349, 1356 (D.C. Cir. 1979), and cases cited therein.

[20] *Liberty Trucking Co., Extension-General Commodities*, 130 M.C.C. 243, 246, and 131 M.C.C. 573, 576 (1979), *aff'd sub nom., Assure Comp. Transp. Inc.* v. *United States*, 629 F.2d 467 (7th Cir. 1980).

[21] Manual, *supra*, at 49.

Guidelines for the Processing of Opposed Cases

There has been some confusion in the public's mind and within the Commission's staff on how applications will be processed after opposing statements have been filed. We will thus set forth guidelines to clarify the situation for the benefit of all concerned. We also wish to dispell any doubts on how we believe the Congress intended for us to reform procedures governing applications. Our aim is to make fundamental changes in the decisional process.

While in many respects our discussion in this regard is based on the new legislation, its roots can be traced back to precedent developed through case law and policy statements in the last few years. These not only have been affirmed by the courts when they were challenged on appeal, but also in our view were specifically endorsed by the Congress in the Motor Carrier Act of 1980. In fact, the new law seems to go even further than our prior decisions, although for the most part we do not believe it is necessary to delineate this specifically for our purposes here, since we are dealing with a comprehensive application process rather than one just for motor carriers of property.

In licensing, the "public convenience and necessity" standard is clearly the most stringent of the decisional criteria which we must apply. It follows, then, that the method for applying this criterion would be legally sufficient for lesser standards as well. In *Liberty Trucking Co., Ext.—General Commodities, supra,* at n. 20, we discussed the methodology for resolving the issue of public convenience and necessity in opposed cases. There, we stated that competing interests would be weighed by balancing the benefits which would flow from a grant of authority against the destructive impact a new service might have on competing carriers. However, the balancing process is not even begun unless protestants have demonstrated the potential for harm. They must show that the ability of existing carriers to serve the public would be placed in material jeopardy to trigger the process.

In Ex Parte No. MC-121, *Policy Statement on Motor Carrier Regulation,* 44 FR 60296, 60299 (1979), we clarified the scope of the decisional outline discussed in *Liberty, supra.* We indicated that the Commission will grant authority commensurate with the demonstrated purpose unless it is established by parties opposing the application that the entry of a new carrier into the field would endanger or impair the operations of existing common carriers to an extent contrary to the public interest.

When the *Policy Statement, supra,* at 60299, was adopted, the mechanics of the application process were significantly different. At that time, the Federal Register notices were tentative grants of authority in the sense that if protests were filed, the merits of the application would be considered *de novo,* and applicant was accorded the opportunity of submitting additional evidence beyond what had already been furnished with the application. In sum, the system was designed to expedite unopposed cases and had little or no effect on the remainder of the docket. See *Revision of Application Procedures,* 42 FR 62486 (1977).

In contrast, under the procedures we have used on an interim basis and adopt as final rules in this document, applicant initially submits with the application the totality of the evidence upon which it relies. If the evidence is minimally sufficient, a threshold finding is made in the Federal Register notice that applicant is fit, willing, and able to provide the transportation and that the service will serve a useful public purpose, responsive to a public demand or need. Protestants are then accorded an opportunity to rebut the findings. If protestants wish to place the findings in issue, they will be expected to do so through specific evidence controverting what applicant has submitted. This could, for example, include fitness matters not mentioned in the applicant's presentation or substantially grounded attacks on the veracity of applicant's testimony or that of its supporting witnesses. Assuming that protestants in any given application proceeding are unable to rebut applicant's threshold case, the burden of proof shifts to protestants to demonstrate that the application should not be granted. This burden will be particularly stringent, since the new legislation significantly altered the decisional framework by placing increased importance on the role of competition in the national trucking industry. *La Bar's, Inc., Extension—Mountaintop Insulation,* 132 M.C.C. 263 (1980). Impact on existing carriers remains a factor for our consideration, although its importance is greatly diminished by the statutory injunction against our finding that diversion of revenue or traffic from an existing carrier in and of itself is inconsistent with the public convenience and necessity. *Id.* at 269. As we recently explained in *Art Pape Transfer, Inc., Ext.—Commod, in End-Dump Vehicles, supra,* at n. 10, diversion of traffic and revenue, unaccompanied by demonstrable public harm, does not constitute inconsistency with the public convenience and necessity.

We believe that the changes brought about by the Motor Carrier Act are likely to alter the traditional analysis in Commission decisions and produce somewhat shorter opinions. To begin with, issues which were generally always relevant in an earlier era are no longer decisionally significant, e.g., adequacy of existing services, and need not be addressed. Most important, in this connection, as noted above, evidence relating to diversion of traffic and revenue is irrelevant unless protestants explicitly demonstrate a connection between harm to themselves and harm to the public.

Moreover, as we explained in *Art Pape, supra,* at 93, Congress has now established an explicit evidentiary process giving significant new advantages to the applicant. Under the new entry procedures, the applicant must still come forward with some information demonstrating the utility of its proposed service. Once that is established, however, minimal applicant's case may be, the statute creates a presumption in favor of entry and competition, and we can deny the application (in whole or in part) only where the opponents can persuasively demonstrate that a grant would be inconsistent with the public convenience and necessity. To arrive at that conclusion, we must find that there is a demonstrated public harm which outweighs the benefits which are presumed to flow from a grant of authority.

Status of Unopposed Cases

MCLA states that the interim rule assumes all unopposed applications must be granted. It may, they contend, mislead applicants which have not presented a prima facie case with their public support. They further argue that the interim rules mistakenly assume that unopposed applications have no statutory burden under the new Act.

We will amend the rules to indicate the role of the review boards in the decisionmaking process prior to publication of the notice of the application in the Federal Register.

We have addressed the entry requirements of the Act in the prior section. A fuller explication is contained in *Art Pape, supra,* at 93–94, and *La Bar's, supra,* at 269–272. Under the Act, the applicant must still come forward with some evidence of the utility of its proposed service. Once the applicant has carried its threshold burden under the relaxed entry standard, the burden

of proof shifts to persons opposing the application to show that the proposed service is inconsistent with the public convenience and necessity. In sum, once the threshold case is established, the statute creates a presumption in favor of entry and competition.

The review board screens the presentation of applicant prior to Federal Register publication. If an application is materially incomplete, it will be rejected. On the other hand, if the necessary documentation is substantially present, the review boards will examine the contents of the application to see whether there is sufficient evidence to establish a threshold case. If there is not, the application will be rejected[22] by a letter explaining the deficiencies in the substantive evidence. If the threshold test has been met, the application will be published in the Federal Register. Once published, the burden of proof has shifted to protestants. If the application is unopposed, there will be a grant of authority without further examination of the evidence. The only exception will be in those circumstances where Commission staff discover the possibility that applicant may have fitness problems, or if there is evidence of veracity problems.

We thus find that where applicant has carried its initial evidentiary burden and the evidence is unrebutted, applicant has sustained its overall burden of proof.

Oral Hearings

Numerous parties contend that the interim rules' treatment of the oral hearing process is unlawful or inappropriate. They argue that "extraordinary circumstances" is not a proper standard, and generally object to the guidelines set forth in interim rule 1100.247(B)(f). It is also contended that a specific ruling is required on requests for oral hearing in each case.

Under the provisions of the Administrative Procedure Act (APA), an agency is not required to provide oral hearings. While the APA stresses the due process opportunity to be heard, a party is entitled to present its case either by oral or by documentary evidence, 5 U.S.C. 556(d). The Supreme Court has construed these provisions of the APA as not requiring hearings consisting of oral presentations in agency proceedings. Rather, such hearings are compulsory only when the statute governing the agency's actions make an oral hearing mandatory.[23]

The codified Interstate Commerce Act (ICA) does not provide that parties in operating authority proceedings be granted an opportunity for an oral hearing. The Motor Carrier Act of 1980 does not change that situation. In fact, the legislative history of the Motor Carrier Act indicates that Congress envisions most operating rights applications will be handled under the modified procedure.[24]

The Commission has never found there to be a compulsory requirement of an oral hearing in application proceedings.[25]

The courts have long supported the Commission's procedures for handling application proceedings in documentary form under the modified procedure. In *Riss & Co.* v. *United States*, 341 U.S. 907 (1951), the Supreme Court reversed a lower court's holding that an oral hearing was required in an application proceeding. The Court merely cited *Wong Yang Sung, supra.* Subsequently, in the second *Riss & Co.* decision on remand, 117 F. Supp. 296 (W.D. Mo.), *aff'd per curiam*, 346 U.S. 890 (1952), a hearing consisting of pleadings and written argument only was held to be adequate.

Many courts have considered the validity of the Commission's modified procedure in light of the APA, the Interstate Commerce Act, and the due process guarantees of the U.S. Constitution.[26] Uniformly, the courts have held that the modified procedures are fundamentally fair.

Part of the consideration upholding the modified procedure is the provision of the APA that an administrative agency may adopt procedures for receiving evidence in written form, see 5 U.S.C. 556(d). Moreover, the courts have noted that the Commission's written procedures protect procedural due process rights in light of the safeguards provided under the rules of practice.

The safeguards referred to by the courts include several provisions of the rules of practice. First, oral hearings may still be provided under appropriate circumstances. These circumstances are primarily where material issues of fact are in dispute.

The courts have also noted that availability of discovery procedures in the rules of practice safeguards a party's procedural due process rights. The discovery procedures have been found to obviate the need for confrontation and cross-examination of witnesses and the alleged necessity for an oral hearing.[27]

Our newly revised rules of practice similarly safeguard procedural due process rights by providing a means by which a party can obtain an oral hearing. Although the rules indicate that the Commission will handle most cases under the modified procedure, and that oral hearings will be held only in extraordinary cases, the rules clearly and fully set forth what information a protestant must submit in a request for oral hearing and the standard for setting a case for oral hearing—material issues of fact in dispute. See 49 CFR 1100.253(i).

Certain commentors complain that our limitation of oral hearings to extraordinary cases is too narrow. It was not our intent to suggest that we had arbitrarily concluded that oral hearings would never be either necessary or desirable. Our limitation of oral hearings to extraordinary circumstances was intended, instead, to reflect our judgment that the ordinary issues which had triggered an oral hearing in the past—*e.g.*, the large number of protesting parties, the magnitude of the potential diversion of traffic and revenue, or the breadth of the application—would alone no longer constitute grounds for setting an application for hearing before an administrative law judge. To better reflect this intention, we shall modify the standard as set forth in final rule § 1100.253(i).

We offer certain observations in this connection. To begin with, it is clear that there is no requirement for oral hearings in motor carrier licensing

[22] An applicant can file an appeal of this rejection or can refile the application after eliminating the deficiencies. If an applicant chooses to resubmit, it should refer to its prior application and fee payment so as to avoid a second fee being assessed. If no refiling or appeal is made, then there is no fee refund.

[23] *Wong Yang Sung* v. *McGrath*, 339 U.S. 33 (1950).

[24] See the statements of Senator Cannon ("We expect * * * the end of virtually all oral hearings * * *") and Senator Packwood ("* * * the new law gives the ICC the kinds of procedural tools to greatly expedite applications * * *"), 57 Cong. Rec. S7685.

[25] *Kingpak, Inc., Investigation of Operations*, 103 M.C.C. 319, 344 (1966). See also *Theatres Service Co., Extension-Duluth, Ga.*, 113 M.C.C. 744, 746-47 (1971) (no oral hearing required in the case of an application that might otherwise be sent to a joint board).

[26] *Eastern Oil Transport, Inc.* v. *United States*, 413 F. Supp. 121 (E.D.N.C. 1976); *Frozen Foods Express, Inc.* v. *United States*, 340 F. Supp. 254 (W.D. Tex. 1972); *Richard Dahn, Inc.* v. *I.C.C.*, 335 F. Supp. 337 (D.N.J. 1971); Howard Hall Co. v. *United States*, 332 F. Supp. 1076 (N.D. Ala. 1971); *C. I. Whitten Transp. Co.* v. *United States*, 328 F. Supp. 1120 (S.D. W. Va. 1971); *Allied Van Lines Co.* v. *United States*, 303 F. Supp. 742 (D.D. Cal. 1969); *National Trailer Convoy, Inc.*, v. *United States*, 293 F. Supp. 634 (N.D. Okla. 1968); *Lincoln Transit Co.* v. *United States*, 256 F. Supp. 890 (S.D. N.Y. 1966); *Chemical Leaman Tank Lines, Inc.* v. *United States*, 251 F. Supp. 269 (E.D. Pa. 1965); and *Brotherhood of Locomotive Engineers* v. *United States*, 217 F. Supp. 98 (N.D. Ohio 1963).

[27] See *Frozen Foods Express, supra*, at 261; *Ashworth Transfer, Inc.* v. *United States*, 315 F. Supp. 199, 203-03 (D. Utah 1970); *Howard Hall Co., supra*, at 1080, n.17; and *Allied Van Lines, supra*, at 749.

cases. In determining whether or not to employ oral hearings, nevertheless, we believe we should be guided by three considerations—the private interest at stake, the value of oral hearings to the decisional process, and the administrative burdens associated with oral hearings. See *Mathews v. Eldridge*, 424 U.S. 319 (1976).

Two private interests are ordinarily involved in licensing cases—the applicant and those supporting the application, on the one hand, and the protestants, on the other. We believe that a reading of the Motor Carrier Act and its legislative history demonstrates that Congress has struck the public interest balancing in favor of applicants. While there may be public interest reasons for altering this balance in individual cases, we believe, by and large, that applicants should receive prompt processing under modified procedure.

A critical purpose of oral hearings is development of a record adequate to permit a reasoned decision. Our experience with modified procedures over the years convinces us that we can reach a reasoned decision in most cases without the necessity of oral hearings. Under the new law factual issues which traditionally occupied much of the time and effort associated with oral hearings—such as the determination of the traffic and revenue likely to be diverted, or the feasibility of the applicant's proposal—are no longer of critical decisional importance. As a consequence, we doubt that critical factual issues will arise to quite the same degree as in the past.

Finally, we cannot overlook the burdens to both the parties and the Commission which flow from the employment of oral hearings. There are costs, such as witness and travel expenses, and differences in consulting and legal fees, which vary depending upon the type of procedure employed. While we are plainly prepared to incur these costs, or have the parties incur them, when necessary to reach an informed decision, we will be reluctant to add administrative and other burdens in the absence of a plan showing that oral hearings are required.

We note that a request for oral hearing lies at any time during a proceeding, although normally this should be done prior to or immediately after the submission of evidence by protesting parties. Thus, a protesting party would normally request oral hearing with the submission of its evidence, since it has already had an opportunity to review applicant's statements. Applicant's request would normally come upon application or at the reply stage, since it would have made an assessment of the evidence presented in opposition. Late requests for oral hearing may be denied where prejudice would occur to other parties, even if new facts come to light which might otherwise make oral hearing preferable. Parties are advised that late requests must be considered against the need to adhere to the statutory deadlines.

Some commentators have argued that complexity of a case is sufficient to warrant its handling under the oral hearing process. See *General Policy Statement Concerning Motor Carrier Licensing Procedures*, Ex Parte No. 55, 31 FR 6600 (1966). That policy statement indicated that the more complex cases would be assigned to oral hearing.

We note that it has been Commission practice in the past to assign cases to oral hearing solely because of their size. In the future, cases will not be sent to oral hearing solely because of the magnitude of the record. There may be occasions when, in our discretion, it will appear that the *complexity* (as distinguished from the size of the record) of a case warrants handling under oral hearing. Our focus is on the ability to decide a case upon substantial written evidence and arrive at a well reasoned result. Many large cases are quite simple in content. The structure of the application, the cohesiveness of the shipper evidence, and the interests of the opposing parties are major determinants in deciding when a case is so complex that it can only fairly be handled under the oral hearing process. These circumstances are impossible to determine in the abstract, and should be left for case-by-case judgments.

We would also point out that our appellate process has always been handled entirely from the large written record developed at a hearing. Our staff is well versed in handling large, written records. Oral hearing's determinative standard is need for cross-examination and the credibility of the parties where material issues are in dispute.

It is argued that the Commission must make individual affirmative rulings on an oral hearing request, and that we cannot deem a request to be denied merely by publishing a decision. We would note that in the past we never explicitly ruled on the oral hearing request when a case was set for the modified procedure. We merely issued an order directing the parties to submit modified procedure statements, and the oral hearing request was deemed denied. Under the final rules, applications are, in essence, deemed set for modified procedure handling upon filing. Subsequent examination of the record which discloses a need for oral hearing will result in the issuance of an order resetting the case for hearing.

Note that a party is able to appeal an initial decision on the grounds that oral hearing was necessary.

We believe that the public should be apprised of our internal "designation" process. Additionally, our new process will require modification of our regulation pertaining to delegation of authority by the Chairman, 49 CFR 1011.7, as explained below.

The general power of delegation of authority within the Commission is found in 49 U.S.C. 10305. These delegations are delineated in the regulations set forth in 49 CFR 1011. Previously these delegations were contained in Organization Minutes.

The Chairmen is given authority over procedural matters in the Commission. See especially 49 U.S.C. 10301(f)(3) and 49 CFR 1011.4(b)(2)(ii). Under these powers, the Chairman has the power to designate proceedings for handling under the modified procedure or oral hearing procedures.

The Chairman has delegated some of his powers over procedural matters to both the Chief Administrative Law Judge (49 CFR 1011.7(c)(2)) and the Director of the Office of Proceedings (49 CFR 1011.7(c)(3)). In the past they have used this power concurrently in the designation of proceedings. Modified procedure orders are issued in the name of the Director of the Office of Proceedings, and oral hearing orders are in the name of the Chief ALJ. This procedure has developed through informal understandings between the two offices. The procedure is not set forth in any regulation. Any public documents merely state that the Commission will determine whether the application should be placed on the hearing docket or the modified procedure docket.

In order to clarify this procedure, the delegation regulations should be amended to add a section clearly defining the lead responsibility of designating proceeding for handling either under the modified procedure or the oral hearings procedures.

Delegating lead responsibility to one office will obviate the need for duplicative review of the cases, which occurred in the past. The need for expeditious handling of our cases internally requires that we wring every unnecessary handling step out of our processes. We, therefore, will assign lead responsibility for designating cases to the Office of Proceedings, since that Office has physical possession of the records through their early processing stages, since most cases will be handled

under the modified procedure, and since that office is the best judge of the ability of its staff to handle complex cases. The following material shall be added to the last sentence in 49 CFR 1011.7(c)(3):

The Director of the Office of Proceedings shall also have authority, unless otherwise ordered by the Chairman in individual proceedings, to decide whether operating rights applications and complaint proceedings shall be handled under the modified procedure or assigned to the Office of Hearings.

To facilitate the designation process, we have changed the placement of the request for oral hearing in the parties' verified statements to the end of the verified statement. A separate attachment labeled "Oral Hearing Request" is preferred.

Content of Oral Hearings

Overnite Transportation Company questions whether, in light of the requirement that applicants and protestants file their evidence at the initial stages of a proceeding, the content of the oral hearing will be limited in any way. We recognize that much of the operational evidence of the parties will have been submitted in the verified statements. We believe, however, that the Administrative Law Judge should be given discretion to analyze the evidentiary needs in each case. There may be instances where additional operational evidence should be admitted. In other cases, cross examination of a key witness may be sufficient. Certainly there is no need for the parties to present orally what has already been submitted in written form, unless clarification or credibility is in issue.

Not only will we be making less use of oral hearing, but we anticipate that in many instances the duration and complexity of those hearings will be reduced, resulting in additional savings to the public.

Notice of Oral Hearing

Nelson & Harding states that as a matter of fairness to the parties, as well as for the Commission's own administrative convenience, a deadline for apprising the parties of oral hearing should be established. They suggest that the notice be given within 30 days after the rebuttal statements are due.

We are sensitive to this problem, but believe conscientiousness on our part, rather than a firm rule, will produce the desired results. Almost all cases set for oral hearing will be determined about the time the rebuttal statement is received, and the Commission will make every attempt to notify parties as soon as possible after that date that an oral hearing is scheduled. Normally this should be accomplished well within 30 days from the rebuttal due date. However, it is not possible to adhere to this deadline in every case because not all cases are designated for oral hearing at the rebuttal date. The Section of Operating Rights screens the file before or at the time rebuttal statements are due, and analyzes requests for oral hearing. It is possible that the review board assigned the case may later believe that oral hearing is necessary, and it has the authority to make the determination under its decisionmaking powers. In that case, again, we will try to issue an oral hearing notice as soon as possible, but it may be outside of the 30-day period suggested.

Supporting Evidence in Motor Common Carrier Cases

A number of persons complain that we improperly read the Act and that shipper or user support is required in motor common carrier of property proceedings.

In this regard, the MCLA attacks our apparent reliance on H.R. Rep. 96-1069, *supra*, as a guide to the type of evidence permissible under section 10922(b)(1). They argue that the report is not conclusive evidence of legislative intent and cannot be relied on as providing insight into Congressional intent, citing *National Small Shipments Traffic Conference, Inc.* v. *C.A.B.*, No. 782163 (D.C. Cir., decided February 11, 1980).

We believe MCLA's reliance on *N.S.S.T.C.* v. *C.A.B.*, *supra*, is misplaced. The case involved a challenge to the Board's action under the amended Federal Aviation Act, Pub. L. No. 95-63, 91 Stat. 1278, exempting carriers from tariff filing requirements. The challenge was based on legislative history suggesting that the Congress did not intend the Board to use its exemption power as it did. In upholding the Board's action, the reviewing court held that "* * * the plain language of the statute authorizes the Board's action * * *", slip op. 16. The court reasoned that absent any *"clear contrary evidence* (court's emphasis) of legislative intent," the plain language of a statute controls. Slip op. 17. Thus, the court did not suggest that legislative histories provide no insight as to Congressional intent, as MCLA suggests. Rather, it reaffirmed the importance of following unambiguous statutory language.[28]

[28] We note in passing that the MCLA's blanket attack on the value of the H. Rept. 96-1096, *supra*, as a guide to our implementation of the new Act seems somewhat disingenuous since its pleading contains several references to both H.R. Rep. No. 96-1069, *supra*, and S. Rep. No. 96-641, 96 Cong., 2d Sess. (1980), when those reports support its positions.

In the above context we believe MCLA's support of narrowing acceptable evidence under the new Act to that submitted by potential users lacks merit. Section 10922(b)(1)(B) refers to evidence presented by *"persons* supporting the issuance of a certificate." (emphasis supplied). The Act defines "persons" to include a trustee, receiver, assignee, or a personal representative of a person in addition to its meaning in 1 U.S.C. 1 (49 U.S.C. 10102(15)). Section 1 defines person to include corporations, companies, associations, firms, partnerships, societies, and joint stock companies, as well as individuals. We believe these definitions to be clearly inclusive and not exclusive.

In our view the plain language of section 10922(b)(1) requires that the Commission receive evidence from any person supporting issuance of a motor carrier of property certificate. Our denomination of the types of evidence allowable under the interim rules should have been seen as illustrative of the types of evidence that may be received under the new application procedures. While this may not assuage MCLA's fears that such evidence could prove insurmountable, the fact remains that the new Act on its face requires the Commission to consider any evidence from persons offered to show that a proposed service will serve a useful public purpose although as the House Report states, shippers evidence is still the best evidence. Further, such an approach is consistent with the Commission's past practice of liberal receipt of evidence even though some evidence was accorded little or no weight. Finally, we cannot subscribe to MCLA's belief that the expansion of the types of evidence allowable in an applicant's attempt to make a threshold case will inevitably lead to a threshold showing in every case. The new Act does not preclude us from weighing even uncontroverted threshold evidentiary submissions. Rather it ensures that out determinations can be made with the benefit of as broad as evidentiary view as possible. For the above reasons, we see no compelling reason to limit evidentiary submissions to that of potential users.

Prior Commission Policy Statements Which Affect the Application Process

The Commission has previously issued policy statements which relate to the application process. In this portion of our report we will discuss the continuing validity of those policy statements.

Related issues in a single application

The Commission issued a policy statement, at 41 FR 5380 (1976), concerning limitations on the scope of authority sought in an individual application for permanent operating rights authority. The Commission determined that the scope of authority sought should be limited to a single issue and related issues with common support or moving in a related fashion with the primary issue. Multiple unrelated requests for authority would not be accepted for filing.

We now overrule that policy and will allow applicants to have free choice of what the scope of their application should be. We realize that even prior to the Act we accepted many applications which were not limited to single issues due to the broadness of the application. We recognize that under our "consolidation" type application proceeding it is possible that some protestants will be concerned with only certain portions of the proceeding, while another set of protestants will have another set of interests. This has always been true.

We believe that the applicant's decision to increase the scope of its operations systemwide is sufficient indication that the matters should be handled under one proceeding. Examinations of the initial submittals will often not reveal the underlying related issues or systemic changes being proposed by applicant. On the other hand, an applicant should be aware that, for strategic purposes, proposing many different types of operations in a single proceeding may result in portions of the application that would have been unopposed now being required to undergo the opposed application process. Still, that is a choice best left to applicant. We therefore overrule the policy statement issued at 41 FR 5380.

New evidence in rebuttal statements

The Commission issued a policy statement concerning new evidence in rebuttal statements filed under the modified procedure at 40 FR 42810 (1975). We stated that we would reject new evidence submitted by an applicant in its rebuttal statements under the modified procedure relative to alleged service deficiencies of a protestant regardless of when such alleged service deficiencies may have occurred. We continue to adhere to that policy, and the policy statement issued in the Federal Register of September 16, 1975, at 40 FR 42810, is affirmed.

Operational feasibility

The Commission issued a general policy statement concerning motor carrier operational feasibility, dated November 15, 1973. The now superseded OP-OR-9 application form contained a requirement that applicant present operational feasibility information. The policy statement required that an applicant must present evidence respecting how equipment was expected to be returned to an origin point, as well as other data relating to the operational feasibility of the proposal, including the incidence of dead head operations.

If an applicant stated in its initial evidentiary presentation that empty or partially empty vehicle movements would result upon a grant of its application, applicant was expected (1) to specify the extent of such operations, by mileages and the number of vehicles, that would be incurred, and (2) to designate where such empty vehicle operations would be conducted.

The Commission later announced that the policy of requiring evidence of return movements was intended to be applied as an equitable factor militating in favor of granting applications where applicants show that efficient traffic movements on return were a part of their proposals, but it was not intended to serve generally as a basis for denying an application where a need had been established for the proposed service, where backhaul traffic may have been unavailable, or where return traffic movements were otherwise not possible.[29]

We conclude that applicant may present such evidence in its application, but that this is not required, and to this extent we overrule the policy statement. We adhere to the line of cases mentioned immediately above that submission of this evidence is permissive for the applicant. It can enhance an applicant's position, but other factors normally outweigh this factor. We also believe that a protestant should be allowed to present energy and economic efficiency evidence in support of its position.

We are aware that the Transportation Policy as amended by the Act provides that energy and economic efficiencies be provided for in our regulation of the industry. Normally, however, operational feasibility will not be a decisive factor in an application proceeding. We arrive at this conclusion for the following reasons.

Giving significant weight to operational feasibility evidence would suggest that we can administratively allocate the productive use of resources better than the marketplace; that we can decide which carrier should transport certain percentages of the available traffic; and whether this will be done at the maximum efficiency. Stated differently, it assumes we can decide whether an applicant will operate exactly as it proposes, what response existing carriers will make (such as to compete more aggressively) and whether our powers of prediction are reliable in the long term. We think that in most cases these assumptions are unfounded.

The new Act gives recognition to this observation. Congress has now recognized that marketplace competition is the better allocation mechanism. Unless there are clear reasons in a specific case for believing that the marketplace will not produce the better results, we should not disturb that process.

The marketplace is dynamic. Carrier and shipper managements make decisions based on today's economic circumstances. Our review of the evidence is at best several months late. During this time, there are many options open to all parties for making their operations more efficient. An existing carrier, faced with the prospect of a new competitor, can lower prices and attract more business. It can seek additional authority from the Commission to ensure balanced operations. It can drop or rearrange service in the market area and put its resources to work where it can operate more efficiently.

What is most critical, from the administrative point of view, is that deciding cases using operational feasibility as a significant factor in every case results in a blunting of market incentives for existing carriers to reassess the efficiency of their existing operations; it further dulls the cutting edge of competition and its reinforcing tendency to let the most efficient operation rise to the top. In sum, a careful, calculated look at operational feasibility should only be used as a last resort, where we are suspicious that the marketplace allocation scheme is breaking down.

Toto policy

In Ex Parte No. MC-118, *Grant of Motor Carrier Operating Authority To An Applicant Who Intends To Use It Primarily As An Incident To The Carriage Of Its Own Goods And Its Own Non-transportation Business*, 43 FR

[29] *MDI, Inc., Long Prairie, MN Contr. Car. Applic.*, 129 M.C.C. 346 (1978); *Timlaph Corp. of Virginia*, 129 M.C.C. 367 (1978); and *G.R.M. Inc., Ext.—Automobiles from California*, 131 M.C.C. 919 (1980). See also *Warren Transport, Inc. v. U.S.*, No. 79-2030 (D.C. Cir., October 6, 1980).

55051 (1978) we affirmed the Commission's decision in *Toto Purchasing & Supply Co., Inc.*, 128 M.C.C. 873 (1978), which marked a departure from our adherence to the policy of *Geraci Contract Carrier Application*, 7 M.C.C. 369 (1938). The *Geraci* policy provided that the Commission would not grant a motor carrier certificate or permit to an applicant who intended to use it primarily as an incident to the carriage of its own goods and its own non-transportation business.

The Commission's present policy is that motor carrier operating authority will be granted to an applicant who intends to use it primarily as an incident to the carriage of its own goods and its own non-transportation business, provided (1) that the standard criteria for motor common or contract carrier applications, as the case may be, are met, and (2) that the applicant is agreeable to the imposition of conditions requiring it to conduct its for-hire motor carrier activities and its other activities independently and to maintain separate records for each.

The policy mentioned above will continue in effect for carriers engaged in proprietary operations. The carrier will have to conduct its for-hire motor carrier activities and its other activities independently and to maintain separate records for each. We see no reason, however, to impose these conditions in individual grants of authority. This is a time consuming process. Instead, we shall adopt a new regulation, at 49 CFR 1041.25, which requires these carriers to follow that policy. Carriers engaging in such operations are expected to know general Commission administrative requirements, just as they are held accountable to be aware of all relevant statutes and regulations. Imposition of these conditions in individual authorities is a time consuming procedure which serves little purpose. It will not be followed in the future.

Rule of eight

The Commission laid to rest its "rule of eight" policy in Ex Parte No. MC-119, *Policy Statement Regarding the "Rule of Eight" in Contract Carrier Applications*, published at 44 FR 2470 (1979). That policy statement dealt with all contract carriers. The policy statement with regard to property carriers is moot. See Ex Parte No. 55 (Sub-No. 42), *Deletion of Dual Operations Policy*, 45 FR 45528 (1980). It retains its validity with regard to passenger carriers. To this extent, the policy statement is reaffirmed, and we will continue to ask for information relating to persons served by applicants for motor contract carrier of passenger authority.

The interim and final rules thus contain a requirement that a motor contract carrier of passengers state the name and address of persons or shippers now served under contract.

Solicitation of withdrawal of shipper support by protestants

The Commission issued a strongly worded policy statement condemning any attempt by parties to its proceedings to persuade opposing witnesses to withdraw support for an application, at 39 FR 43374 (1974). This policy is reaffirmed.

Ex Parte No. MC-121

In Ex Parte No. MC-121, *Policy Statement on Motor Carrier Regulation*, 44 FR 68296 (1979), the Commission adopted a policy statement describing its standards for deciding applications seeking motor carrier authority.

Further refinement of this policy statement has occurred in *Art Pape, supra*, at 93, and *La Bar's, supra*, at 266-272, with regard to applications for property motor carrier authority. The Ex Parte No. MC-121 policy retains its validity with regard to passenger carrier applications, however, since the Act did not change the substantive law regarding passenger carrier entry.

Extensions of time

The Commission issued a policy statement concerning requests for extensions of time in 41 FR 8454 (1976). The policy statement emphasized that a request must be supported by a thorough and detailed explanation of the reasons for the request, with a demonstration of substantial good cause. It was contemplated that no more than one extension of any filing date would be granted, absent a showing of unique circumstances.

In addition, the Commission further addressed the general issue of the standards for granting extensions in *Revision of Application Forms, supra*, at 812. It there adopted a rule, former 49 CFR 1100.247(f)(3), stating that requests for extensions of time within which to file modified procedure statements will be granted only in the most extraordinary circumstances. It was stated that ordinary business occurrences such as vacations, scheduling problems, excessive caseload, and turnover in personnel are not valid reasons, *supra*, at 812.

The interim rules essentially adopted that standard, § 1100.247(C)(d), and limited the requests to no more than 3 working days.

Many parties state that 3 working days are not enough to cover situations where good cause would warrant an extension, and suggestions are made to increase the time to 7 days.

The adopted rules (1) are more detailed in their treatment of the issue of extensions of time than the former or the interim rule, and (2) retain the 3-day rule.

The practicing bar must share the burden of the statutory time limits. Our experience under the interim rules is that the bar is adhering to the more stringent rules with exceptional results. Few problems have been manifested, and members of the bar have exhibited a cooperative attitude in such matters as lost application submittals to protestants. We will monitor this situation closely, but believe that for the time being the 3-day rule should be retained.

The major problem with longer outside time limits is that we would be required to grant requests of the same length to adversary parties in the same proceeding if equally valid reasons were given. If, for example, illness of a person required 7 days be given to protestant, an identical request made by applicant would have to result in a like extension. A valuable 14 of the 180 days would be lost.

We believe that one answer, for those persons practicing before us, is to add their own precautionary measures, such as early mailing of pleadings, to ensure defaults or nonappearances do not occur.

The final rules adhere to the prior policy statement, as well as the philosophy expressed in *Revision of Application Rules*.

Similarly, the final rules require that such requests be made in documentary form (letter or telegraph) with notice of the request transmitted to known parties. The Commission will continue its practice of requiring the requesting party to notify known parties that an extension request has been acted upon.

We should note that there will be some circumstances where system malfunctions will require "adjustments" to filing times. These are not extensions of time in the normal sense because they result from something beyond the control of the parties and fault lies somewhere in the mechanics of the postal system or the application process. For example, during the period of the interim rules, there was an occasion where the Federal Register erroneously misprinted an address, and a potential protestant was slightly delayed in receiving its application copy. Where a system malfunction occurs, persons should bring it to the attention of the

Section of Operating Rights as soon as possible. The public should be advised that purposeful delay by an applicant in submitting a copy of the application package to potential protestants may result in dismissal. See *Glenn McClendon Trucking Co., Inc., Ext.—Containers,* 132 M.C.C. 318 (1980).

Finally, inquiries as to the decision made on an extension request should not be accompanied by attempts to argue the merits of the request with members of the Operating Rights' staff. This is an improper practice under the Commission's Code of Ethics for Practitioners Before the Interstate Commerce Commission, Canon 8.

The issue of rates in application proceedings

The interim rules eliminated reference to former rule 1100.247(n), the policy statement concerning the issue of rates. We did so because we believed the former rule was unnecessarily cumbersome and merely stated obvious evidentiary rules. Under the Act, the issue of rates may be pertinent for discussion in individual cases since, among other things, we are to allow a variety of price and service options, see 49 U.S.C. 10101(a)(7)(B). We continue to adhere to the general policy expressed in the former rule—that the introduction of rate evidence is optional, and introduction of counter-argument is also optional by any party. We do not believe that any of the other requirements in the former policy statement serve a useful purpose, however, and the final rules will contain no reference to the issue.

Elimination of Notarization Requirement

Several parties suggest, and we agree, that the notarization requirement is burdensome and unnecessary. We will eliminate the requirement from the application form and all witness statements, and will substitute language which, when agreed to in writing by the signer of the statement, is legally sufficient to constitute an oath.

We have encountered many problems with the notarization requirement in the past. For example, a number of applications have been rejected because of a failure to notarize some part. Persons practicing before the Commission have stated informally in the past that their witnesses sometimes have difficulty finding a notary official.

The Interstate Commerce Commission's controlling statute contains provisions requiring various applications for operating authority filed with the Commission to "be under oath."

Substitution of unsworn written declarations under penalty of perjury in lieu of verifications subscribed and sworn under oath is permissible under applicable federal statutory provisions. Specifically, such declaration procedures are sanctioned by 28 U.S.C. 1746 (1980 Supp.), the pertinent portion of which provides for use of unsworn declarations under penalty of perjury whenever, under any law of the United States, any matter is required to be supported by the oath of the declarant. Reliance upon this declaration-in-lieu-of-oath provision to change the standard verification procedures prescribed by the Commission's Rules of Practice ensures comparable solemnity in application forms and related pleadings.

Use of declarations in lieu of formal oaths will not diminish the legal sanctions available to the Commission. Sanctions are found in two types of statutes in the United States Code, involving prosecution for fraud and perjury. See 18 U.S.C. 1001 and 19 U.S.C. 1621.

We have decided to adopt the declaration language with the addition of the phrase "under the laws of the United States of America" to cover situations, as noted in 28 U.S.C. 1746, where statements are executed outside of the United States. The phrase's inclusion will cover all potential declarers.

Deletion of Financial Information

As several persons pointed out, we had no specific requirement under the interim rules for an applicant in a fitness only application to file financial information. We have eliminated this requirement for all types of applications in the final rules, since we do not believe that this information serves any useful purpose.

To determine fitness we have historically considered the financial fitness of an applicant, applicant's willingness to adhere to Commission regulations, and the carrier's ability to perform service in a safe manner for the protection of the public.

The Commission has never established a fixed, minimum dollar limitation as a prerequisite for a carrier's entry into the regulated trucking industry. We have recognized that many new entrants start small. In recent years we have adopted a standard that the financial fitness of an applicant is pertinent only in relation to whether it can adequately conduct the proposed operation. The question for resolution has been whether an applicant is sufficiently capitalized to undertake the specific operations it intends to conduct.[30]

We can think of no substantial reason to continue this examination. In a more heavily regulated environment, where the regulatory agency rather than the marketplace was the prime guarantor of service, a policy that we wanted to ensure that an applicant could actually conduct the operation it was proposing may have had validity. Since the newly authorized carrier would soon be accorded the benefits of all the evidentiary presumptions which historically ran in its favor, it was reasonable that the new carrier should be required to uphold its part of the regulatory bargain, i.e., it would perform the operation as proposed.

The basis for this policy no longer exists. Under Ex Parte No. MC-121, *supra,* and the new Act, carriers are encouraged to tailor price and service options in such a way that the public will have greater choices. The marketplace will ultimately determine the financial success of a proposed operation. At the same time, a financial failure will not translate into any long-term service vacuums since our entry policies will permit the rapid replacement of carriers that fail. This is not to say that we are unconcerned with the common carrier obligation and service to small shippers and communities.[31]

We will continue to examine equipment availability, however, and an applicant will be required to describe its equipment, or how it would obtain equipment to perform the operation in the short run; see final rule § 1100.251(f)(5).

We are concerned that undue regulatory reliance on a carrier's unfavorable financial picture may unnecessarily block entry for many small companies. It is axiomatic that many small companies survive just on the basis of hard work, an asset that cannot be portrayed in balance sheets. In other cases, additional authority is the very means by which a struggling company can reverse its financial fortunes.

Finally, we have great doubts about the past effectiveness of the financial fitness examination. Many carriers have received an affirmance of their overall fitness, including financial fitness, only to file bankruptcy petitions soon thereafter. The bankruptcy laws and the insurance requirements imposed on

[30] *Consolidated Carriers, Inc., Common Carrier Application,* 131 M.C.C. 104, 108 (1978).

[31] We believe that with freer entry, carriers, in the absence of high regulatory barriers, will more willingly seek authority to serve less busy, and perhaps less profitable areas.

carriers serve as adequate protection to the public. Our past examination has had little or no correlation to the ongoing ability of a company to survive.

Therefore we will delete the financial information requirement for all motor carriers. We will also delete this requirement for water carriers, forwarders, and brokers, who are governed by similar insurance and bankruptcy laws.

We do offer one observation in connection with financial information. Although we shall eliminate an affirmative requirement that the applicant file evidence demonstrating financial fitness in the traditional sense, we are prepared to examine any financial activity which may bear on the carrier's treatment of its customers. We expect parties raising fitness questions to point with specificity to customer abuses.

Passenger Carrier Interests

Comments were filed by the American Bus Association (ABA), the national trade association for the bus industry. It notes that the Motor Carrier Act of 1980 makes no substantive changes in the entry standards in the passenger carrier area, and it believes the differences in the entry standards must be reflected in the application form and the application process as a whole.

ABA believes that the supporting witness' certification should contain an indication of the scope of the application, since a witness should know the scope of the application he or she is supporting. We agree. This concern was voiced by other interests as well, and the certification form shall contain this information.

ABA also points out that the current application form's request for common control information about other transportation "entities" may be too broad. We will change the language in the affiliation portion of the application to indicate that we are referring only to "carriers" regulated by the Commission.

ABA also notes that there is no reason to ascertain in advance where an oral hearing might be held, or to note this in the caption summary. We agree. The Office of Hearings can arrange hearing sites at their own discretion in consultation with the parties.

ABA believes that the witness certification form in the appendix to form OP-1 implies that support from one public witness is sufficient, which may be inappropriate for passenger application cases. While we do not agree that the previous form implies this, as a precautionary measure we will make an appropriate instructional change in the form.

We do not agree with ABA's position that a separate "passenger" certification statement should be used. The witness certification form adopted here contains appropriate references to passenger type applications.

ABA argues that nothing in the Act suggests that the number of oral hearings in passenger cases be reduced. The ABA contends that the quality of existing service can be documented more easily for freight transportation and there is generally more of a need to cross-examine a passenger witness.

We do not believe that there should be a different "oral hearing" standard for passenger applications. The requirements of the APA apply equally to passenger and property applications.

It should be remembered that with the adoption of Ex Parte No. MC-121, passenger carrier applicants no longer carry the burden of proving the second *Pan-American* criterion, "whether this purpose can and will be served as well by existing lines or carriers." Applicant must only demonstrate that the operation proposed will serve a useful public purpose, responsive to a public demand or need, or, the first *Pan-American* criterion. The Commission will grant authority in passenger carrier cases commensurate with that demonstrated purpose unless it is established by parties opposing the application that the entry of the new carrier would endanger or impair the operations of existing common carriers to an extent contrary to the public interest.

Thus, Ex Parte No. MC-121 lifts a significant evidentiary burden from applicant. No longer will an unsophisticated passenger witness have to defend its testimony that existing carriers cannot serve its needs as well. The issues are more sharply focused under Ex Parte No. MC-121, and we believe that in general there will be less necessity to cross-examine passenger witnesses.

Second, the Commission has long recognized the difficulties inherent in presenting a passenger application case. *Brush Hill Transp. Co. Com. Car. Applic.*, 112 M.C.C. 348 (1970). The very nature of this evidence is that it will be generalized. The testimony is often given by laymen, the service needed is nonrepetitive in nature, and often includes leisurely travel for which a future need or commitment cannot directly be stated.

We see little reason to subject unsophisticated passenger witnesses to extensive cross-examination in routine cases merely to drive home a point the Commission has recognized for years—the nature of passenger travel is such that even rather unspecific predictions by potential users are difficult.

We should point out that the modified procedure has been used for many years in all forms of passenger cases, and past experience dictates that the oral hearing standard discussed elsewhere in this decision is an appropriate standard for all types of cases.

ABA contends that the policy against restrictive amendments should not apply to passenger cases, since the Motor Carrier Act of 1980 does not substantively apply to passenger carriers. It also raises other general points about the need for restrictive amendments which are answered in our discussion of the restrictive amendment process in general. Some policy matters specifically relating to passenger transportation should be addressed separately, however.

ABA and other parties realize that the lack of a restrictive amendment process does not mean that the Commission will automatically grant an application in full, or deny it in full. We still have the capability to grant applications in part. With each adversary presenting the appropriate evidence, we can get a complete picture as to what public need for the service exists even in the absence of restrictive amendments.

Finally, ABA correctly points out that certain portions of the fitness only descriptions in the interim rules do not clearly designate that these fitness applications refer to property applications only.

Elimination of Petitions to Modify Restrictions Contained in Operating Authority, or to Modify the Scope of Authority

The former rules provided for a petition method to modify operating authority. This was nowhere explicitly set forth in the rules of practice, but was merely contained in the fee section, 49 CFR 1002.2(d)(15). There is no longer any need to retain a special modification procedure. Reforms in the application process have been successful and the petition method is outmoded and now only serves to complicate processing, while the application process is flexible enough to handle any change in authority.

There were no special rules governing petitions for modification. After notice of the petition was published in the Federal Register, further evidence was to be submitted even if the matter was unopposed. Extra expense was required both for the parties and the Commission, and the entire process took longer. Many times tendered petitions for modification had to be rejected because the request involved a major change in

operating authority—this also involved extra work for the Commission and the public.

There were no legal differences in the treatment of parties under either process. Whether major or minor in scope, any increase in operating authority must conform to the requirements of due process, the APA, and the relevant entry standards as set forth in the revised Interstate Commerce Act. Therefore, elimination of the petition method will not affect any party's substantive or procedural due process rights. In short, the petition for modification process is duplicative and, therefore, unnecessary.

Petitions for Correction

We shall continue to accept petitions which are corrective in nature, since they do not require being tied into the applications process. Nor must they be published in the Federal Register, since these ministerial corrections are technical in nature and do not affect any parties' rights.

49 CFR 1002.2(d)(4) in the final rules will continue to read as in the interim rules.

(4) A request seeking the modification of operating authority only to the extent of making a ministerial correction, a change in the name of the shipper or owner of a plantsite, or the change of a highway name or number—no fee.

Petitions for Clarification or Interpretation

We unintentionally deleted another petition form in the interim rules, the petition for interpretation or clarification. This device has proved useful to carriers in the past who wish to have an official ruling on an ambiguity in their authority.

It is necessary, however, to assure that these proceedings conform to the statutory deadlines, and that some definite procedure be outlined. Therefore we will add a new paragraph to final rule 1100.253 to indicate that such petitions may be filed. The petition method will conform to the application process—petitioner will file its argument in full with the petition. No application form will be used. Comments from the public will be due 45 days from the date of Federal Register publication, and shall be served on the petitioner. Petitioner may file a reply on all parties of record. The fee will be that charged in former 49 CFR 1002.2(d)(15), or, $200. We will place this fee change in the appropriate section, 49 CFR 1002.2(d)(2) as follows:

(2) A petition to interpret or clarify an operating authority under 49 CFR 1100.253(e)—$200.

Petitions to Modify Permits Under 49 CFR 1002.2(d)(8)

An unintentional inclusion in our interim rules was the petition to modify a permit by adding the name of a shipper. This was used in the past where no change in the scope of a permit was sought, but the permit holder merely wanted to serve an additional shipper.

However, a substantive addition to an authority requires notice and opposition rights. It is, in all respects, an extension of authority.

Permit holders would thus be able to extend their authority through this process at a fee lower than that required for common carrier extensions. There is no public interest rationale for this disparate treatment. Further, these substantive additions to authority require that the permit holder file the same information as would be filed in a normal application (including, in the contract carrier area, submission of shipper support). For this reason, we believe there is no justification to retain a process which differs from the application process in name only, and which has a different fee structure for essentially the same processing work by the Commission and same benefit to the party. In view of this, we shall delete 49 CFR 1002.2(d)(8) and reserve that number for future use.

Note that ministerial corrections, such as a change in the name of the shipper or owner of a plan site, are allowed without fee under 49 CFR 1002.2(d)(4).

Changes to the Application Form

A number of revisions have been made to the application form to clarify the information required.

We have dropped the requirement that applicant supply the form of its business (e.g., corporation) and the listing of corporate officers and directors. We did not use this information in operating rights proceedings.

We will require maps in the future for regular route applications and, in addition, those irregular-route applications where an unusual boundary is involved, such as a river or highway.

The notarization/verification requirements have been simplified in conjunction with our previous discussion of the need for notarization.

The form will require that applicant list the authority it seeks on the application form. The witness support statement will enable the supporting individual or organization to show the extent to which it supports the application, since some persons relate that witnesses are reluctant to sign an unqualified support form.

An added question regarding whether the application is supported by public witnesses is designed to assist in internal processing.

The certification of shipper or witness support has been refined. Among other things, it will reflect that, in passenger cases, persons normally are testifying as to their personal travel service needs. In property cases, we are asking that shipper witnesses disclose the actual or potential commodities they will tender to the carrier, frequency and volume of the traffic, and a more meaningful description of the geographical movement of the traffic.

The final rules will also give the review boards the power to accept an application which is in substantial compliance with the rules. The boards have in the past rejected some applications with adequate evidentiary showings but which were deficient in one filing element. Where an applicant has substantially submitted appropriate fitness and threshold evidence, rather than delay the processing of the application, the review boards should accept these applications for filing. We note that this is not an invitation to the public to become careless in the preparation of their applications. We believe, however, that immaterial omissions should not delay the processing of applications. If a pattern of omissions from one party or practitioner is found, the board should properly reject the application with appropriate instructions to the party.

The application form will indicate that a lack of a response to a question will indicate it is not applicable.

Caption Summary Examples

Several parties asked that a sample caption summary be attached to the application form, or that an acceptable format be contained in the instructions.

We have some hesitation about doing this in the form, since the variety of forms of authority is quite large. We are dealing not only with many different types of applications, but many different descriptive terms within the request for authority. A previous attempt was made in *Revision of Application Forms, supra*, at 838–46, but in retrospect the attempt was only partially successful, as some of the suggested caption summaries became outdated. We believe it preferable to continue to advise persons requesting authority to seek instructions from a commission office, or consult a copy of the Federal Register, which itself contains numerous examples. Finally, we will put general examples in the advisory booklets we are planning.

"Pack-and-Crate Applications"

Section 10 of the Household Goods Transportation Act of 1980 ("HG Act") adds another classification of applications to our "fitness only" procedures, transportation for the United States Government of used household goods which transportation is incidental to a pack and crate service on behalf of the Department of Defense. This essentially replaces the special regulations for this licensing that existed in 49 CFR 1046.40. These were deleted in our interim rules because of the proscription against master licensing procedures.

To accommodate the pack-and-crate amendment to 49 U.S.C. 10922(b)(9) we shall add the pack-and-crate application to our list of fitness only applications in the application rules.

We shall not, however, impose all the informational requirements found in former section 49 CFR 1056.40, since they are now unnecessary. In many instances, the information is called for in the current application form and remains relevant, e.g., affiliation with other regulated carriers, or, is obviated by the fact that we will be issuing certificates of public convenience and necessity to these carriers, which carry with them the corresponding duties to maintain insurance and make tariff filing before operations commence.

The former rules did require a description of the territory which the applicant intended to serve, 49 CFR 1056.40(a)(2)(v). We view the fitness only type operation, however, as a type similar to the general commodities U.S. Government traffic, small shipments, and owner-operator food transportation provisions which Congress has exempted from the "need" provisions of the entry statute. The pack-and-crate carrier, as with these aforementioned carriers, has been accorded a special status. It should not be required to provide information which relates to our former economic regulation of the types of operations. There is no need to describe to us the territory which would be served. That information is no longer germane to our regulation, and need only be provided to the public through appropriate tariff filings. Therefore, all authority granted under these procedures will be "between points in the United States."

Property Broker Applications

Barry Weintraub points out that the information required to be given in the fitness only verified statements is inapplicable, in part, for the application of the property broker. We agree and will key the type of authority sought to the information required by the Commission. Thus, the property broker applicant need not give information concerning its description of equipment and safety program. The "description of circumstances" likewise is not applicable to property broker applications—its intended use pertains to "community not regularly served" and "rail service substitution" applications.

Property Broker Affiliations

Arrow Truck Lines, Inc., *et al.*, state that we should require the applicant for a property broker license to disclose affiliations between itself and shippers or warehouses. However, we believe that the rebating rules at 49 CFR 1045.9 serve as the proper vehicle to protect the public interest. These rules were recently revised in Ex Parte No. MC-96 (Sub-No. 3), *Property Broker Practices*, 132 M.C.C. 233 (1980).

Requirement That Applicant Describe Circumstances Why Community Not Regularly Served

The Act applied the fitness only standard to applications for motor common carrier of property authority to serve communities not regularly served by certificated motor common carriers of property. In our interim rules we required the applicant to describe in detail the location of the community, the highways which serve the community, the last date of service from other motor carriers and their identity, and the last date when service was requested from these carriers. The Department of Justice, while agreeing with the lawfulness of our interim rules as a whole, disputes that this should be the evidentiary burden of applicant.

In their view, the burden of coming forth with this evidence should be borne by those planning to protest the application. They argue that this information is not likely to be within the scope of knowledge of an applicant. We agree to the following extent. Applicant may well not have full knowledge of all the relevant facts, but it should be required to make a good faith initial showing.

The final rules, § 1100.251(h)(6), require the applicant to name the location of the community and highways which serve the community. It shall state, if known, the last date of service from other carriers and their identity, and the date when service was requested from these carriers.

We believe the final rule establishes a proper burden of evidence. Applicant is testifying that to the best of its knowledge the community does not receive regular service. Other information may or may not be within the sole province of opposing carriers, depending on the knowledge which abandoned shippers may be able to impart.

Obtaining Copies of the Application From the Applicant

A number of modifications are suggested with regard to interim rules 1100.247(A)(1)(3) and 1100.247(h). The interim rules require the applicant, upon receipt of a $10 check or money order payable to applicant from an interested person, to furnish a copy of its entire application package within 5 days of the request being received.

The comments suggest that 5 days is too long to allow for the response. Some suggest that the request should be allowed by telephone or that applicant be required to send the material by express mail or other expedited means if the requester is willing to pay for this service. It is contended that $10 is insufficient to pay for copying large applications, and a charge for page or actual costs should be considered. Finally, it is argued that an applicant, or its representative, should be penalized if it fails to mail the material in a timely fashion.

We agree that 5 days is too long and will change the time limit for returning the material to 3 days. Our initial concern was that an applicant might unexpectedly receive a large number of requests for copies, or that requests might come in so sporadically that a printing schedule would be impossible to set up. In retrospect, however, the ready availability of reproduction machines should allow an applicant to respond to sudden requests.

We believe that in the long run it is better to use a simple, automatic rule in this situation. A system which allows applicant to compute actual costs and bill in the future will only lead to more paperwork for everyone. Applicants not represented by counsel (or by counsel not used to practicing before the Commission) may be uncomfortable with a telephone system, and we believe that there should be some documentation in the event there are disputes about who agreed to pay for what. Requiring express mail service or similar service would only be possible from selected cities, and would require future billing with its attendant burdensome paperwork.

We believe that the most sensible rule is to allow applicant, at a minimum, to insist upon receiving written request, paid in advance, for copies. The $10 fee, computed at 25 cents a page, would allow coverage of printing costs for an application up to 40 pages in length,

surely a sizeable amount.[32] An automatic system obviates complex inter-office billing systems.

However, we believe that applicants and interested parties agreeing in advance to informal arrangements should be allowed to do so. Rather than prescribe the specifics, we would rather allow those persons to work out arrangements among themselves. It should be noted, however, that should abuse of this system occur in individual cases, we will be hard pressed to achieve equity where we have no documentation to rely upon.

We will treat abuses brought to our attention on a case-by-case basis. An applicant should not be penalized by dismissal through inadvertent paperwork foulups. A continuing series of complaints against a practitioner or an applicant will be watched carefully. Where delays occur in the transmittal of the application, the parties should attempt immediately to contact each other by telephone. Only in extraordinary cases will we grant 3-day extensions of time, so parties should request the copy of the application early in the 45-day period. Mail delays will not be sufficient cause for extensions.

Finally, the check or money order should be made payable to applicant's representative. The representative will normally be mailing the copies. It will have the option of crediting its client's account or signing the check over to the client.

Limited Time to Reply

Where in the course of a proceeding one party files a motion, under our existing rules, a reply may be filed within 20 days. 49 CFR 1100.21. We believe that this amount of time is excessive under the statutory time limits. We will therefore limit the reply time to 10 days. Motions are generally uncomplicated pleadings and the reply time given is adequate. The replying party shall certify to the date when it received the pleading in its reply.

Consolidation of Separate Applications

National Automobile Transporters Association (NATA) notes that the interim rules do not contain a means for parties to request consolidation.

In the past, consolidation (available under 49 CFR 1100.46) was employed to enable the Commission to evaluate like applications on an equitable basis, and to increase administrative efficiency by allowing resolution of many proceedings to be accomplished in a single decision.

Unfortunately, similar applications may be filed weeks apart. Under the statutory time limits we will be unable to hold up applications which are not concurrently filed. However, we will entertain requests for applications to be treated in a consolidated manner where the request is made upon filing of the application, and the applications are submitted together. Since it may be impossible for applicants to coordinate their applications and mail them in one package, we will entertain consolidation requests where the applications are filed within 5 days of each other.

As shown in the rules, these requests should be made to the Section of Operating Rights of the Commission. The applications will be published in the Federal Register with indications that they are going to be treated in a consolidated manner. Thus, protestants will have the opportunity to file a single pleading which shall refer to the lead docket number in the consolidated proceeding. (Normally, the lead docket is merely the carrier with the lowest MC– number).

Representatives of the consolidating applicants should indicate their agreement with the consolidation in their individual submissions. Alternatively, if mutual agreement has been reached in advance, one representative may indicate that he or she has contacted all representatives and they are mutually agreeable to consolidated disposition.

Page Limitation on Abstract of Protestants' Authorities

Under the interim rules, a protestant was required to submit a description or copy of the specific pertinent authority in conflict with that sought in the application, see § 1100.247(B)(d). Protestants were requested not to send copies of all authorities. In spite of this request, many carriers continued to send in copies of all their authorities, even in cases where only one or a few authorities were in issue.

This causes internal problems. Since dockets must be microfilmed, an enormous amount of time and money is spent copying irrelevant material.

Additionally, it is also our experience that the exact wording or scope of authority of a protestant is only in issue in a small number of cases. We believe that a summary of the conflicting authority will suffice to give notice to applicant and the Commission as to the legally authorized extent of a protestant's conflicting authority. Therefore, we are placing a 5-page limit on the authority description or summary of a protestant. Protests containing more than a 5-page summary will be rejected.

We are aware that some protestants may have more complex authorities than others. Regular-route carriers, for example, often submit their entire scope of authorities, apparently believing that the structure or network of their operations must be disclosed to the Commission. In the future, a citation to the specific line of their authority which allows them to serve the origin points of the traffic along with a summary of their network of their authority or a map will be sufficient.

In all situations where an issue arises as to the scope of the authority, we can consult the Commission's records on the carrier and determine the exact extent or description of the authority.

Speedy Service of Decisions

North American Van Lines, Inc., comments that service of decisions in operating rights cases takes an excessive amount of time, and an applicant must assume a 3 to 6 month lag between service of a final decision and the issuance of an authority. It thus believes that these delays may render illusory the decisional time limits established by the legislation. We have modified our issuance of authority procedures in 45 FR 80109 (1980) as reflected in final rule § 1100.251(1)(3).

Carriers Who Wish To Join Their Existing Authority With the Requested Authority to Provide a Through Service

Applicants for motor common carrier of property authority occasionally desire to join their existing authority with the authority they are seeking in the application. These efforts may include the joining of irregular-to-irregular, regular-to-regular, or irregular-to-regular route authority.

The history and present status of "tacking" is set forth in the recent notice of proposed rulemaking in Ex Parte No. MC–142, *Elimination of Gateway Restrictions,* 132 M.C.C. 174 (1980).

We believe that Congress' enactment of Section 6 of the Act had the effect of precluding the future granting of authorities where gateways or circuitous routings would have to be observed. Clearly, Congress did not intend that we continue to grant authorities with defects similar to those to be removed. We also believe that it is reasonable to infer that Congress recognized the existing abilities of motor carriers of property to tack; these are described in full in *Elimination, supra,* at 176.

That being the case, it is incumbent upon us to decide the proper mechanism for motor carriers of property who wish to combine a proposed operation with

[32] We note that in the past applicant was required to send its witness certifications to interested parties, and its verified statments to protestants, without being compensated. The intent of this rule is to strike a balance between average remuneration and simplicity.

existing operations; and, to determine what reasonable notice of the intent to provide a through service as a result of this joinder should be provided to potential protestants.

Irregular-to-irregular route

Irregular-route applicants wishing to provide a direct service which encompasses, in part, existing irregular-route operations, shall be required to file a regular OP-1 application for the complete direct authority. The proper method to accomplish this is not by filing a so-called gateway elimination application, as might have been done in the past. We are not troubled that in some cases duplications of authority may result, since the authority will be construed as conferring a single operating right.

These applications do not require special notice provisions in the Federal Register. The public is aware what the full extent of the service is from the face of the publication. The public is also aware that the carrier would not be able to tack the newly acquired irregular-route authority with existing irregular-route authority to provide a direct service.

Regular-to-regular route

As a preface to our discussion of regular-route "tacking" it should be emphasized that while the carrier is authorized to "tack" common authorities, it has the option to provide a direct service without observance of circuitous routings or gateways; the public should consult the final rules adopted in Ex Parte No. MC-142 for further information on this subject.

Regular-route authorities historically have been tacked with one another. This practice should be allowed to continue. These operations may, of course, be conducted directly.

The industry is well aware that this form of tacking has been allowed. When a regular-route application is published in the Federal Register, the potential protestant is on notice that the proposed operation must be viewed in light of the applicant's existing network of routes. There are a number of sources for a potential protestant to obtain copies of the applicant's authorities to determine the extent of this network. The Commission has long followed the view that it need not publish the entire scope of a regular-route carrier's operations every time a new piece is added to the carrier's network of routes; reasonable notice is all that is required.

Out of an abundance of caution, however, we shall include in the preface which accompanies notice of the applications in the Federal Register appropriate language to indicate that where a carrier seeks regular-route authority, the authority, when granted, may be joined with applicant's existing authority to perform a direct service.

Regular-to-irregular route

In this situation, we are presented with two different possibilities. The carrier may be applying for irregular-route authority, but may have existing regular-route authority, or vice versa. The industry is aware that such tacking is permissive; see *Elimination, supra*, at 176.

Where a carrier is applying for regular-route authority, the public has adequate notice of the tacking possibilities, for the reasons stated above. In addition, the new language inserted in the preface puts the public on notice of the possibility. Where, however, the applicant seeks irregular-route authority, the public may not have notice of the tacking potential. To cover this situation we have adopted the rule set forth at § 1100.251(u). This will reasonably and properly apprise the public of the full extent of the tacking possibilities. Consistent with the rules adopted in Ex Parte No. 55 (Sub-No. 43A), Acceptable Forms of Requests for Operating Authority, an irregular-route applicant with regular-route authority must indicate the tacking possibilities, since it will not be able to restrict its ability to provide a through irregular-to-regular (or vice versa) route service.

Service of Motions by Protestants

Nelson & Harding bring the following matter to our attention. Under the interim rules, a protestant is required to serve motions and replies to motions on all parties, including all other protestants. Due to the structure of the rules, protestants will not know who the other protestants are until the initial decision is served.

Nelson & Harding suggests, and we agree, that protestants' motions and replies to applicant's motions concern only the immediate parties. For example, an applicant may file a motion asserting that the protestant's statement should be stricken. The protestant's defense of the pleading concerns only that party. Likewise, where a protestant believes that an applicant's statements are defective, its assertions can stand or fall without the additional views of protestants. Therefore, the final rules will require that protestants need only serve the applicant in these matters. Likewise, applicant need only serve replies on the moving party.

Is Federal Register Notice Sufficient for Potential Protestants?

We asked the public to comment on whether Federal Register notice of an application was sufficient notice to potential protestants prior to the filing of their opposition statements. We now reject this proposal, since we believe that potentially interested persons must have sufficient information to apprise themselves of the intended operations of the applicant.

Serving Notice of Applications on All Truckers

Rep. Gillespie Montgomery, Member, U.S. House of Representatives, urges that we require that existing carriers be affirmatively informed by the Commission when an application for authority affects their interests. Most of these truckers, he asserts, do not receive the Federal Register.

We are unable to implement this request. We cannot ascertain in advance when a carrier may be interested in an application. We do not have the capabilities to serve the more than 21,000 carriers in the nation with every notice of an application—it would be an almost impossible burden. We should point out that the Federal Register serves this purpose very well, and persons interested in opposing applications can receive subscriptions to the Federal Register for a nominal sum. Various services, moreover, routinely monitor the Federal Register publication and motor carriers can subscribe to these services at a relatively modest cost.

Notification to the Commission of Erroneous Federal Register Publication

Arrow Truck Lines, Inc., *et al.*, point out that the interim rules require the applicant to inform the Commission of an erroneous Federal Register publication within 10 days of the publication date. However, they argue this may not be sufficient time if the Federal Register is delayed. They believe that the interim rules 1100.247(A)(j)(3) should be reworded so that the applicant may inform the Commission of the error as soon as possible.

We agree that it is critical that the public operate under a correct presumption—that the Federal Register publication is correct. On balance, it is more important that a slightly delayed correct republication be made so that the whole proceeding is not aborted. Consequently, the rule will merely require that the notification be as soon as possible, and that where notification occurs within 10 days the Commission

shall correct material errors and republish the notice. Notifications after 10 days will require publication only at the Commission's discretion. For example, a very late notification may present us with no real option, because of the statutory time frames, to do other than request that applicant refile the application.

Qualifications for Protesting

ATA argues that there is no need for the qualifications format since carriers have the right to protest if they meet the statutory criteria listed at 49 U.S.C. 10922(b)(7) (A) and (B). ATA misunderstands our intent in having adopted a qualifications format. This merely enables the Commission to determine whether a carrier has the statutory right to intervene, or whether intervention is discretionary. The qualifications format in no way lessens the statutory right of carriers to protest.

ATA also urges that the Commission eliminate the use of the term "extraordinary circumstances" found in interim rule 1100.247(B)(c)(6), and substitute language which delineates the circumstances under which the Commission will normally accept protests from organizations representing carrier interests. ATA suggests that it be couched in terms of the presence of industry-wide impacts or economic impacts emerging from individual cases. We will adopt the language suggested by ATA, since it appears to be a clearer definition of when persons should be permitted to intervene where they have no specific connections with a particular application, but seek to address broader issues. Therefore, we will allow persons to intervene under the "permissive" intervention provisions of 49 U.S.C. 10922(b)(7)(C) under the following circumstances:

> A person seeking to qualify under this paragraph shall describe in detail the circumstances which warrant its participation and how they are consistent with 49 U.S.C. 10101(a). The Commission shall normally permit such person to intervene when it shows that a proceeding is novel or of first impression, is of industry wide importance, or has significant ecomomic impact.

Duplicative Operating Rights

Alamo Express, Inc., *et al.*, argue that the interim rules should be amended to require a statement by applicant of all operating authorities presently held by the applicant which are duplicative of the authority sought.

This is unnecessary, since the Commission now automatically imposes a non-duplicating provision in its issuance of operating authorities.

Discovery Under the Adopted Rules

The Commission's discovery rules, 49 CFR 1100.55–65, were adopted in *Revision of Application Forms, supra*, at 813–17. We continue in the belief that discovery has marginal utility in modified procedure cases, but we will entertain petitions seeking discovery where good cause has been demonstrated, see 49 CFR 1100.55(a). We note that in cases where discovery lies, we may be required to extend the statutory time frames as allowed in extraordinary circumstances by 49 U.S.C. 10322(i).

Further Supplementation of Evidence Prior to Federal Register Publication

During the period of the interim rules, some persons attempted to supplement original filings after their original submittal. Typically, it would be cited that certain shipper statements had recently arrived at their office. The final rules explicitly state that supplementation is not permitted. We find that such statements frequently do not find their way into the appropriate record until after material action has occurred in the case.

Equipment List Summary

It has been a common practice for carriers to provide the Commission with a list of individual pieces of equipment when providing their description of equipment. The final rules will show that all we require is a summary of pertinent equipment, and we do not need individual identifications of the equipment. Where pertinent, a carrier may segregate certain types of equipment in the summary list. We request carriers to stop submitting unnecessarily detailed lists of their equipment.

Unnecessary Documentation in General

The Commission bears extraordinary expense in copying and preserving the official records of proceedings. We find that many parties to proceedings habitually provide detailed lists or wholly irrelevant material. Many applicants and protestants submit lengthy computer printout traffic studies. A summary of these studies would in many cases be a more effective and less costly means to present this evidence. Applicants on occasion send copies of their operating authorities when they are irrelevant to disposition of the case. We ask that all persons reexamine their filings to remove unnecessary information, and attempt to consolidate or summarize all information that appears in list form where this summarization will not affect their evidentiary presentation.

Filing of Separate Fitness Applications

We believe that the fitness only applications are substantially related in issue, and we will allow a person to file for more than one fitness only authority in a single application.

Marking Envelopes to Identify Type of Pleading

We are requesting the public to identify the type of pleading being submitted so that our mail room can more quickly direct the mail to the appropriate office. We shall request, but not explicitly require, that party representatives mark, in the lower LEFT hand corner of an envelope containing a pleading, the docket number (not the title) and the type of pleading. Please refer to 1100.253 for a description of the appropriate identifications. This will speed the handling of your requests for extensions of time, and the handling of the proceeding in general. Persons are requested to begin this practice immediately.

Copies

These rules require an original and one (1) copy of all matters filed in application proceedings. Accordingly, we shall delete that portion of Appendix F following 49 CFR 1100.250 under the headings "Applications—Motor Carrier and Broker," and "Applications—Water Carrier and Freight Forwarder."

Comments That Were Not Addressed

We have addressed all comments which were directly relevant to the application process and which raised substantial issues. A number of issues were worthy of comment but were not directly relevant, and we will attempt to address these in future proceedings. Some of these include:

(1) The comments of the General Services Administration (GSA) concerning the definitions of used household goods and hazardous materials.

(2) GSA's suggestion that in fitness only applications the application fee be limited to the cost of publishing the application in the Federal Register. This question, while relevant to the application process, has complex policy considerations which should be answered on a separate basis. See our discussion of filing fees for owner-operator food transportation applications in Ex Parte No. MC–143, Owner-Operator Food Transportation, notice of proposed rulemaking published at 45 FR 61337 (1980).

(3) The Department of Defense's suggestion that we adopt an applicant certification of minority status, where that is to be relied upon as a factor to determine whether the service is responsive to a public demand or need. We believe that any party to a proceeding may properly raise this issue in their argument and verified statement. A separate checkoff is unnecessary. We may address this issue in a future proceeding.

Technical Correction

The interim decision deleted the property broker application rules formerly found at 49 CFR 1045A, but failed to include the necessary deletion language in Appendix C of the interim decision. We reaffirm the policy for making that deletion, and will insert the necessary deletion language in Appendix A of the final decision.

Oral Argument Request

A number of parties request oral argument. We believe it to be unnecessary. A large number of knowledgeable parties have responded to our request for comments and have offered numerous helpful suggestions.

We note that in the past the Commission has been very receptive to petitions for modifications to our rules of practice. If at a later date there appears to be a continuing serious problem (although we foresee none at this time), we invite affected persons to petition us.

Environmental and Energy Considerations

This action will not significantly impact the quality of the human environment or conservation of energy resources. The rules provide for the proper consideration of these issues in individual application proceedings.

Adoption of Rules

Accordingly, we adopt the rules and the application form set forth in the Appendices, below, and make the other revisions and deletions noted.

This action is taken under the authority of 49 U.S.C. 10321 and 5 U.S.C. 553.

Dated: December 19, 1980.

By the Commission, Chairman Gaskins, Vice Chairman Gresham, Commissioners Clapp, Trantum, Alexis, and Gilliam. Commissioner Clapp concurring in part and dissenting in part and reserving his right to submit a separate expression at a later date.

James H. Bayne,
Acting Secretary.

Appendix A—Revisions to the Code of Federal Regulations, Title 49

PART 1011—COMMISSION ORGANIZATION; DELEGATION OF AUTHORITY

§ 1011.7 [Amended]

49 CFR 1011.7(c)(3) is amended by adding this material to the last sentence:

* * * * *

(c) * * *

(3) * * *

The Director of the Office of Proceedings shall also have authority, unless otherwise ordered by the Chairman in individual proceedings, to decide whether operating rights application and complaint proceedings shall be handled under the modified procedure or assigned to the Office of Hearings.

PART 1041—INTERPRETATION—CERTIFICATION AND PERMITS

49 CFR 1041 is amended by adding a new § 1041.25, to read as follows:

§ 1041.25 Operating authority granted to private motor carriers.

Where a motor carrier receives operating authority and intends to use it primarily as an incident to the carriage of its own goods and its own non-transportation business, the carrier's issued authority implies that the carrier shall conduct its for-hire motor carrier activities and its other activities independently, and shall maintain separate records for each activity.

PART 1002—FEES

49 CFR Part 1002 is amended by removing 49 CFR 1002.2(d)(8) and reserving it for future use, and by adding 49 CFR 1002.2(d)(2) as follows:

* * * * *

(d) * * *

(2) A petition to interpret or clarify an operating authority under 49 CFR 1100.253(e)—$200.

* * * * *

PART 1045A—PROPERTY BROKER LICENSING [REMOVED]

49 CFR 1045A is removed.

PART 1100—COMMISSION ORGANIZATION; DELEGATION OF AUTHORITY

Appendix F [Amended]

Remove that portion of Appendix F, which follows 49 CFR 1100.250, under the headings "Applications—Motor Carrier and Broker," and "Applications—Water Carrier and Freight Forwarder."

49 CFR 1100.251 through 1100.253 are revised to read as follows:

§ 1100.251 How to apply for operating authority.

(a) *Applications governed by these rules.* These rules govern the handling of applications for permanent operating authority of the following type:

(1) Applications for certificates and permits to operate as a motor common or contract carrier of passengers or property.

(2) Applications for permits to operate as a freight forwarder.

(3) Applications for certificates, permits, and exemptions for water carrier transportation of property and passengers.

(4) Applications for licenses to operate as a broker of motor vehicle transportation.

(b) *Applications for operating authority which require only fitness proof ("fitness only" applications).* There are certain types of authority which can be obtained by an applicant showing only that it is fit, willing and able to perform the service and to comply with the law and Commission regulations. These are listed below. The applicant does not provide any supporting witness testimony. The application can be opposed only on the grounds that applicant is not fit or does not fall within the statutory definition. These applicants shall skip paragraphs (e) and (f) of this section, and substitute the information called for in paragraphs (g) and (h) of this section.

(1) Motor common carrier of property transportation to serve any community not regularly served by a certificated motor common carrier.

(2) Motor common carrier of property transportation to provide service as a direct substitute for complete abandonment of all rail service in a community.

(3) Motor common carrier transportation for the United States Government of property (except used household goods, hazardous or secret materials, and sensitive weapons and munitions).

(4) Motor common carrier property transportation of shipments weighing 100 pounds or less if transported in a motor vehicle in which no one package exceeds 100 pounds.

(5) Motor common or contract carrier of property transportation of food and other edible products (including edible byproducts but excluding alcoholic beverages and drugs) intended for

human consumption, agricultural limestone and other soil conditioners, and agricultural fertilizers, when the transportation is provided with the owner of the motor vehicle in the vehicle (except in emergency situations). After issuance of the authority, such transportation (measured by tonnage) shall not exceed, on an annual basis, the transportation provided by the motor vehicle (measured by tonnage) which is exempt from the Commission's jurisdiction under 49 U.S.C. 10526(a)(6).

(6) Transportation for the U.S. Government of used household goods which transportation is incidental to a pack-and-crate service on behalf of the Dept. of Defense.

(7) Motor carrier brokerage of general commodities (except household goods).

(c) *Procedures used generally.*—(1) *Modified procedure.* Most cases are handled under the modified procedure. The applicant and protestants send statements made under oath (verified statements) to each other and to the ICC. There are no personal appearances or formal hearings.

(2) *Oral hearings.* Oral hearings are used infrequently. Either an applicant or a protestant may request oral hearing at any time during the proceeding. The rules governing requests for oral hearings are set forth at § 1100.253(i).

(d) *Starting the application process:* Form OP-1.

(1) All applicants shall use form OP-1.

(2) Obtain the form at Commission regional and field offices, or call the Office of the Secretary at 800-424-5230.

(e) *Information to be submitted by applicants (except fitness only applications).* (1) A completed application form, OP-1. (2) A caption summary which describes the authority sought. (3) A separate verified statement from the applicant, as described in paragraph (f) of this section. (4) Verified certifications of witness or shipper support (see the appendix to the OP-1 form).

(i) *Motor common carriers of property.* Applicants for this authority normally file verified certifications of witness or shipper support. Alternatively, an applicant may elect to file other evidence showing that the service proposed will serve a useful public purpose, responsive to a public demand or need. This evidence shall be submitted in part (10) of applicant's verified statement, as shown in paragraph (f) of this section.

(ii) *Water carrier exemption applications.* No shipper or witness support evidence is required.

(f) *Applicant's verified statement (except fitness only applications).* Applicant shall file the information described in this paragraph according to the type of application being filed (see KEY). The information shall be provided in separately numbered paragraphs. If a particular item seems inapplicable, write "N/A".

Key For Regular Applications

(1) Motor common carrier of property application
(2) Motor common carrier of passengers application
(3) Motor contract carrier of property application
(4) Motor contract carrier of passengers application
(5) Passenger broker application
(6) Freight forwarder application
(7) Water common carrier application
(8) Water contract carrier application
(9) Water carrier exemption application

Information to be Submitted

(1) Legal name and domicile of applicant. [all]

(2) Name of witness presenting evidence for applicant and why this person is qualified to speak for applicant (as, position with applicant and experience). [all]

(3) Authority requested in this application. [all]

(4) Brief description of present ICC regulated operations, or, any other transportation experience. Do not submit copies of existing authority unless they are an issue in the application. [all]

(5) Description of equipment. It is not necessary to list separately all pieces. A summary is preferred. If applicant has no equipment, it shall specify its plans to obtain equipment (e.g., owner-operators under lease). (all except 5)

(6) *Safety evidence.* Motor carriers holding ICC authority should indicate that they are in compliance with D.O.T. safety regulations. New entrants shall state the following:

"I certify that I have access to and am familiar with all applicable regulations of the U.S. Department of Transportation relating to the safe operation of commercial vehicles and the safe transportation of hazardous materials, and I will comply with these regulations."

Note to applicants: These regulations are found in Title 49, Code of Federal Regulations, Parts 171 to 179 and Parts 390 to 399. Information concerning safety and hazardous materials regulations may be obtained by calling this toll free number: 800-424-9158.

(7) Service now provided to supporting shipper or witness, if any, or, service provided within area sought by application. [all]

(8) Description of service that will be provided if this application is granted. State whether services of this type are not now available. [all]

(9) Name and address of persons or shippers now served under contract [4 only].

(10) Any other evidence in support of the application. *Motor common carrier of property applicants:* If no shipper support statements are being provided, applicant shall submit other evidence under this paragraph.

(11) Legal argument supporting the application. [optional for all].

(12) Any oral hearing request [optional for all]. *Verification:* Separate verification of this statement is not necessary. Applicant understands that the oath in the application form applies to this statement.

(g) Information to be submitted in fitness only applications:

(1) A completed OP-1 form, except for the appendix.

(2) A caption summary describing the authority sought.

(3) A separate verified statement from the applicant, as described in paragraph (h) of this section.

(h) *The applicant's verified statement in fitness only applications.* Applicant shall file the information described in this paragraph according to the type application being filed (see following KEY). The information shall be provided in separately numbered paragraphs. If a particular item seems inapplicable, write "N/A".

Key For Fitness Only Applications

(1) Motor carrier applications
(2) Property broker applications

Information to be Submitted

(1) Legal name and domicile of applicant. [all].

(2) Name of witness presenting evidence and why this person is qualified to speak for applicant (as, position with applicant and experience). [all].

(3) Authority requested in this application. [all].

(4) Description of equipment. It is not necessary to list separately each piece. A summary is preferred. If applicant has no equipment, it shall specify its plans to obtain equipment (e.g., owner-operators under lease). [1 only].

(5) *Safety evidence:* Motor carriers holding ICC authority shall indicate that they are in compliance with D.O.T. safety regulations. New entrants shall state the following:

"I certify that I have access to and am familiar with all applicable regulations of the U.S. Dept. of Transportation relating to the safe operation of commercial vehicles and the safe transportation of hazardous materials, and I will comply with these regulations."

Note to applicants: These regulations are found in Title 49 of the Code of Federal Regulations, Parts 171 to 179 and Parts 390 to 399. Information concerning safety and hazardous materials regulations may be obtained by calling this toll free number: 800-424-9158. [1 only].

(6) *Application under § 1100.251(b)(1):* If the application is to serve a "community not regularly served", describe the location of the community and the highways which serve the community. If known, state the last known date of service from other carriers and their identity, and the date when service was requested from these carriers.

(7) *Application under § 1100.251(b)(2):* If the application is for transportation services as a

direct substitute for complete abandonment of all rail service in a community, state docket number and abandonment approval date by the Commission; give the location of the points sought to be served, and indicate to what portion of the rail line they are adjacent (submit maps where obscure, rural points are involved); certify that rail service was offered at the points for which authority was sought; and, certify that all rail service has been terminated, and give the date, if known. [1 only].

Verification: Separate verification of this statement is not necessary. Applicant understands that the oath in the application form applies to this statement.

(i) *Where to send the application.* (1) The original and one copy shall be sent to the Office of the Secretary, Interstate Commerce Commission, Washington, DC, with the proper application fee. Make checks payable to the Interstate Commerce Commission.

(2) One copy of the application shall be sent to the ICC regional office in which applicant is domiciled. A copy of the caption summary only is sent to the state transportation regulatory body of applicant's domicile.

(j) *Commission review of the application.* (1) ICC staff will review the application for correctness, completeness, and for adequacy of the evidence (the prima facie case).

(i) Minor errors will be corrected without notification to the applicant.

(ii) Materially incomplete applications will be rejected. Applications that are in substantial compliance with these rules may be accepted.

(iii) A review board will decide whether there is adequate evidence so that the full scope of the authority applicant seeks may be published in the Federal Register. If there is not, the application will be rejected in a letter. An applicant may appeal rejections under paragraph (j)(1) (ii) and (iii) of this section. See § 1100.251(t). If an applicant chooses to resubmit the application, it shall refer to its prior application by docket number and give the ICC fee number stamped on the canceled check so as to avoid a second fee being assessed. If no appeal or resubmittal is made, the fee will not be refunded. The date of refiling will be considered the filed date of the application.

(2) The caption summary will be published in the Federal Register to give notice to the public in case anyone wishes to oppose the application. The application will be published in the form of a grant of authority.

(3) If the Federal Register publication does not properly describe the authority being sought because of ministerial error, applicant shall inform the ICC's Section of Operating Rights as soon as possible. Where notification is received within 10 days of the publication, ministerial errors will be correctecd and the notice will be republished. Notifications after 10 days will result in republication only at the Commission's discretion, and may result in an application being rejected without prejudice to refiling.

(k) *changing the request for authority or filing supplementary evidence after the application is filed.* (1) An applicant may not supplement evidence once the application is filed (unless directed to do so by the Commission).

(2) Amendments to the application are not permissible.

(l) *After publication in the* Federal Register. (1) Interested persons have 45 days to file protests. See § 1100.252.

(2) If no one opposes the application, the grant published in the Federal Register will become effective.

(3) If no one opposes an application for an extension of authority, the grant published in the Federal Register will be made effective by issuance of a certificate, permit, or license. If no one opposes an application for initial authority, the grant published in the Federal Register will be made effective by a Commission Notice outlining compliance requirements which must be met before applicant commences the proposed service.

(m) *Furnishing a copy of the application package to interested persons.* (1) Applicant's representative is required to furnish a copy of the application package to interested persons after publication. The request must be made in writing to applicant's representative and must contain a check or money order for $10, payable to applicant's representative. Applicant's representative need not supply copies to any person not sending the appropriate payment. Applicant's representative is required to mail the copy within 3 days of the receipt of the request being received. Non-compliance with this rule may result in dismissal of the application.

(2) Representatives of applicants and potential protestants are urged to communicate by telephone if problems occur in the furnishing of the application. Requests for extensions of time where no attempt has been made to correct matters informally are looked upon with disfavor.

(n) *Opposed applications.* If the application is opposed, opposing parties are required to send a copy of their protest to the applicant.

(o) *Filing a reply statement.* (1) If the application is opposed, applicant may file a reply statement. This statement is due at the Commission within 60 days of the Federal Register publication.

(2) The reply statement may not contain new evidence. It shall only rebut or further explain matters previously raised.

(3) The reply statement need not be notarized or verified. Applicant understands that the oath in the application form applies to all evidence submitted in the application. Separate legal argument by counsel need not be notarized or verified.

(p) *After all statements are submitted.* (1) When the proceeding is to be handled under the modified procedure, the next notification to the parties will be the service of the initial decision.

(2) If the proceeding is to be handled by oral hearing, parties will receive a notice to this effect.

(q) *Applicant withdrawal.* If applicant wishes to withdraw an application, it shall request dismissal in writing.

(r) *Caption summary.* The caption summary, which shall accompany all applications, shall be in the form prescribed by the Commission. Commission field and regional offices offer assistance in preparing correct caption summaries, or examples may be found in the daily Federal Register.

(s) *Compliance.* Prior to beginning operations under a certificate, permit, or license, compliance must be made with the following statutory and regulatory requirements for obtaining insurance or bonding, filing tariffs or schedules, and designating agents to receive service of process.

(1) For Motor Common Carriers of Property: 49 CFR 1043, 1044, and 1310

(2) For Motor Contract Carriers of Property: 49 CFR 1043, 1044, and 1307

(3) For Motor Common and Contract Carriers of Passengers: 49 CFR 1043, 1044, and 1306

(4) For Brokers of Motor Vehicle Transportation: 49 CFR 1043, and 1044

(5) For Water Carriers: 49 CFR 1308; 49 U.S.C. 10329

(6) For Freight Forwarders: 49 CFR 1084, and 1309; 49 U.S.C. 10329

(t) *Appeals to rejections of the application.* (1) Where a review board or other decisional body rejects an application, applicant has a right of appeal. The appeal must be filed at the Commission within 10 days of the date of the letter of rejection.

(2) If the appeal is successful and the filing is found to be proper, the application shall be deemed to have been properly filed as of the decision date of the appeal.

(u) *Tacking or joinder of authority.* (1) An applicant for irregular-route motor common carrier authority which holds regular-route motor carrier authority shall indicate this in its caption summary. The caption summary shall

indicate the sub-numbers of this regular-route authority. The purpose of this requirement is to inform the public that direct operations are able to be performed after combining the irregular-and-regular route authorities.

(v) *Freight forwarder applicants only.* An applicant for freight forwarder authority shall submit the following additional information: Applicant shall state whether it is a person engaged principally in the business of manufacturing, buying, or selling articles and commodities, and whether it controls, is controlled by, or is under common control with any such person. If *yes,* applicant shall describe such persons and advise to what extent such persons use the services of freight forwarders; or if applicant is such a person, whether it performs its own similar operations of assembling, consolidating, and shipping in connection with the transportation of such articles or commodities.

(w) *Water carrier applicants only.* (1) If an exemption is being claimed, applicant shall describe the operations proposed to be exempted and in each instance refer to the statutory provisions under which the exemption is claimed.

(2) If an applicant for exemption under 49 U.S.C. 10544(f) is engaged solely in transporting the property of the parent company, it shall list persons owning all or substantially all of the voting stock of the applicant.

(3) If applicant seeks approval of dual operations under 49 U.S.C. 10930, it shall specify those that would result from a grant of the application.

(4) An applicant for exemption under 49 U.S.C. 10544(e) shall furnish a copy of the charter, lease, or other agreement under which it proposes to operate.

(5) If applicant is a water common carrier seeking a revised certificate covering extension of service pursuant to 49 U.S.C. 10922(e)(3)(B), the following shall be furnished: (i) Describe the portion of the waterway project newly opened for navigation, including the U.S. Engineer District, project number, description of project, and date opened for navigation; (ii) Describe operations performed thus far on uncompleted portion of waterway newly opened for navigation, including date service was extended and points served; see 49 CFR 1140.2; (iii) Describe operations performed under present certificate authorizing service on previously completed portion of waterway, naming points served, indicating when service commenced, and if operation has not been continuous.

§ 1100.252 How to oppose requests for authority.

(a) *Definitions.* A person wishing to oppose a request for permanent authority files a *protest.* A person filing a valid protest becomes a *protestant.*

(b) *Time for filing.* A protest shall be filed (received at the Commission) within 45 days after notice of the application appears in the Federal Register. A copy of the protest shall be sent to applicant's representative at the same time. Failure to timely file a protest waives further participation in the proceeding.

(c) *Contents of the protest.* (1) All information upon which the protestant plans to rely is put into the protest.

(2) A protest must be verified, as follows:

I, ———, verify under penalty of perjury under the laws of the United States of America, that the information above is true and correct. Further, I certify that I am qualified and authorized to file this protest. (See 18 U.S.C. 1001 and 18 U.S.C. 1621 for penalties).

————(Signature and date).

(3) A protest not in substantial compliance with these rules may be rejected.

(4) A protestant files two separate types of evidence. The first is its qualifications evidence, see paragraph (d) of this section. All protestants shall submit qualifications evidence under the format in paragraph (d) of this section. Protestants shall also file factual evidence, according to the guidelines in paragraph (e) or (f) of this section.

(d) *Qualifications format.* This information shall be submitted in separately numbered paragraphs:

(1) Docket number of application being opposed.

(2) Name and domicile of protestant, including lead docket number, if any.

(3) Name and address of protestant's representative.

(4) Name and address of witness presenting the evidence, and why qualified to speak for protesting party.

(5) Description of the extent to which the person seeking to protest possesses authority to handle the traffic for which authority is applied, is willing and able to provide service that meets the reasonable needs of the shippers or public involved, and has either performed service within the scope of the application during the 12-month period before the application was filed or has actively in good faith solicited service within the scope of the application during that period, *or*

(6) Description of any application which the prospective protestant has pending before the Commission which was filed before applicant's application and which is substantially for the same traffic, *or*

(7) Description of any other legitimate interest not contrary to the transportation policy set forth in 49 U.S.C. 10101(a), or of any right to intervene under a statute. A person seeking to qualify under this paragraph shall describe in detail the circumstances which warrant its participation and how they are consistent with 49 U.S.C. 10101(a). The Commission shall normally permit such person to intervene when it shows that a proceeding is novel or of first impression, is of industry wide importance, or has significant economic impact.

Note.—A motor contract carrier of property may not protest an application to provide transportation as a motor common carrier of property.

(e) *Factual evidence format* [except fitness only applications]. (1) A summary, description or copy of the *specific* authorities in conflict with that sought in the application. Protests containing copies of authority or authority abstracts which are more than 5 pages in length may be rejected.

(2) A description of the type and amount of equipment and facilities available to meet the avowed purpose of the application.

(3) A description of present operations that pertain to the application, including a description of the specific services provided to those supporting the application or within the same territory.

(4) Adverse impacts on its business generally and on the public, such as: (a) need to close terminals or other facilities, (b) number of employees that would be furloughed or dismissed, (c) resulting imbalance or inefficiencies caused to its operations, (d) effects on fuel efficiency, or (e) inability to continue its existing service to the public due to a reduction in total business, or loss of essential services that would not be replaced, or other factors.

(5) Evidence that applicant is not fit, willing or able to comply with the appropriate statutes or regulations governing its activities.

(6) Legal or other argument (optional).

(7) Verification.

(8) Certificate of service.

(9) Any request for oral hearing.

(f) *Factual evidence format for fitness only applications: Scope.* The types of applications listed in § 1100.251(b) may be protested on the grounds listed here. Factual evidence in opposition shall consist of the following, where applicable:

(1) A description of the specific grounds upon which it is alleged that applicant cannot meet the statutory fitness criteria.

(2) Alternatively, evidence that the application does not properly fall within the scope of one of the statutorily described categories.

Note.— If the Commission finds that the application does not properly fall within the scope of one of the categories, the application shall be dismissed without prejudice to the filing of an application for authority under other criteria.

(3) Legal argument (optional).

(4) Verification.

(5) Certificate of service.

(6) Any request for oral hearing.

(g) *Requests for oral hearing by a protestant.* It is the policy of the Commission to handle application proceedings under § 1100.251 using the modified procedure if at all possible. See § 1100.253(i). Protestants shall file any request at the end of their protest.

(h) *To whom the protest is sent.* (1) An original and one copy of the protest shall be sent to the Office of the Secretary, I.C.C., Washington, D.C. 20423. The docket number of the proceeding shall be placed conspicuously on the top of the first page of the protest.

(2) Concurrently with the filing in paragraph (h)(1) of this section, a copy shall be sent to applicant's representative.

(i) *Obtaining a copy of the application.* (1) A copy of the application is available for inspection at the Commission's offices in Washington, D.C., or the regional office of applicant's domicile. In addition, applicant is required to send a copy to interested persons upon payment of a $10.00 charge. See § 1100.251(m).

(j) *Withdrawal.* A protestant wishing to withdraw from a proceeding shall inform the Commission and the applicant in writing.

§ 1100.253 General rules governing the application process.

(a) *Contacting another party.* When a person wishes to contact a party or serve a pleading or letter on that party, it shall do so through its representative. The phone number and address of applicant's representative shall be listed in the Federal Register.

(b) *Serving copies of pleadings, letters; the certificate of service.* (1) When the rules require service of a pleading or letter on another party, that material shall be mailed or delivered by hand to the party concurrently with its service on the Commission. See, in addition, 49 CFR 1100.20.

(2) All pleadings other than the application shall contain a statement (certificate of service) that the pleading has been served in accordance with paragraph (b)(1) of this section.

(3) An applicant must serve all pleadings and letters on the Commission and all known participants in the proceeding, except that a reply to a motion need only be served on the moving party.

(4) A protestant need serve only the Commission and applicant with pleadings or letters.

(5) All pleadings or letters, unless otherwise specified, shall be sent to the Office of the Secretary.

(c) *Copies.* All material forwarded to the Commission in Washington, D.C., except for telegraphic material, shall consist of an original and one copy.

(d) *Requests for extension of time.* (1) Requests for extensions of time are granted only in extraordinary circumstances. Parties' or their representatives' workload, personnel changes, or scheduling problems are not sufficient cause.

(2) No extensions will be granted for more than 3 working days.

(3) Requests shall be made in documentary form (letter or telegraph) addressed to the Section of Operating Rights, with a notice of the request sent to known parties. The Commission will notify the requesting party as soon as possible of the decision. The requesting party shall immediately notify all known parties of the action taken on the request.

(4) If the time for filing a protest is extended, the time for submitting applicant's reply is automatically extended.

(5) Oral communications with Commission personnel pertaining to the merits of an extension request are a violation of the Commission's Code of Ethics for Practitioners.

(e) *Petitions to clarify or interpret formally an operating authority.* (1) A person seeking to clarify or interpret its operating authority shall file a petition under these rules.

(2) No application form need be used. Petitioner shall file its entire argument with the petition, with the fee of $200. The petition shall be sent to the Office of the Secretary.

(3) Notice of the petition will be published in the Federal Register. Interested persons may obtain copies of the petition from petitioner's representative in the same manner as provided in § 1100.251(m). Petitioner may file a reply to any opposing argument.

(f) *Replies to motions.* Replies to motions filed under these rules are due within 10 days of the date the motion is filed at the Commission.

(g) *Consolidation of applications.* (1) Applicants may request consolidation of applications. The request shall be made when the applications to be consolidated are filed. Requests for consolidation shall be made in writing to the Section of Operating Rights.

(2) Requests to consolidate applications not concurrently filed shall only be considered to the extent that the applications are filed within 5 days of each other.

(3) Representatives of the consolidating applicants shall indicate their agreement with the consolidation either in the initial request or in their individual submissions. If mutual agreement has been reached in advance, one representative may indicate representatives' assent to the consolidation.

(4) The applications will be published in the Federal Register and their consolidation will be indicated. Protestants may file a single protest which will apply to all the proceedings.

(h) *Marking contents on envelopes, and submission of pleadings.* (1) Send all documents to Office of the Secretary, ICC, Washington, D.C. 20423, unless the rules specify otherwise.

(2) The Commission requests that persons participating in proceedings under these rules mark the lower left hand corner of the envelope with the docket number, where known (not the full title), and the pleading type. To assist the Commission further, use these designations where appropriate:

APPLICATION
PROTEST
REPLY TO PROTEST
EXTENSION OF TIME REQUEST
MOTION
REPLY TO MOTION
APPEAL
REPLY TO APPEAL
DISMISSAL BY APPLICANT
PROTESTANT WITHDRAWAL
PETITION TO CLARIFY

(i) *Requesting oral hearing.* (1) If a protestant (or applicant) believes that a proceeding should be orally heard the person may request an oral hearing. It is the policy of the Commission to handle application proceedings under § 1100.251 using the modified procedure if at all possible.

(2) The request shall specifically state the evidence that would be presented, the reason why the evidence is material to determine the merits of the proceeding, why an oral hearing with cross-examination is necessary to bring it out, and what evidence already in the record would be contravened (with specific page reference).

(3) The Commission intends to assign matters for oral hearing only where use of modified procedure would prejudice a party, material issues of decisional fact cannot adequately be resolved without an oral hearing, or assignment of an application for oral hearing is otherwise required by the public interest.

(4) Denial of an oral hearing request will not be made in writing where the denial is made prior to issuance of the initial decision. The request will be deemed denied when the proceeding is handled under the modified procedure.

Note.—The following appendices B and C will not appear in the Code of Federal Regulations.

Appendix B—New Application Form

FORM OP-1 (Revised 1/81)
Supersedes Forms
OP-OR-9, OP-OR-11, OP-FF-10, OP-WC-10, and OP-WC-20

INTERSTATE COMMERCE COMMISSION

Docket No. ———— (Office Use Only)

APPLICATION

For Motor or Water Carrier Certificate or Permit, Broker License, Freight Forwarder Permit, or Water Carrier Exemption:

Attention: Read Instructions Before Answering.

I. (a) Application of ———— (Name, and trade name, if any) whose business address is ———— (street) ———— (City) ———— (State) ——— (Zip) ——— (Phone).

(b) Applicant's representative to whom inquiries may be made (persons may be representing themselves—put your name and address here); ————(Name) ———— (Street address) ———— (City) ———— (State) ——— (Zip) ———— (Phone, including area code).

(c) Does applicant now hold, or have an application pending, for authority from this Commission? [ ] YES [ ] NO. If YES, identify the lead docket number or numbers:

II. (a) Type of authority applicant is seeking:

Check one:

[ ] MOTOR COMMON CARRIER
[ ] MOTOR CONTRACT CARRIER
[ ] WATER COMMON CARRIER
[ ] WATER CONTRACT CARRIER
[ ] BROKER
[ ] FREIGHT FORWARDER
[ ] WATER CARRIER EXEMPTION

(b) Applicant seeks to transport (or, if a broker applicant, arrange the transportation of)

Check one:

[ ] Passengers
[ ] Property (freight)

(c) Describe the authority sought (this should be identical to the authority described in the caption summary; see paragraph X. of the form):

Fitness-Only Applications

III. Is this an application where the applicant need only prove it is fit, willing and able to perform the service? [ ] YES [ ] NO If yes, check applicable box(es). (Note: if applicant is filing this type application, do not complete the Appendix because witness support is unnecessary).

[ ] Motor common carrier of property authority to serve any community not regularly served by a certificated motor common carrier.
[ ] Motor common carrier of property to provide service as a direct substitute for abandonment of all rail service in a community.
[ ] Motor common carrier of property transportation for the U.S. Government of general commodities (except used household goods, hazardous or secret materials, and sensitive weapons and munitions).
[ ] Motor common carrier of property transportation of shipments weighing 100 pounds or less if transported in a motor vehicle in which no one package exceeds 100 pounds.
[ ] Motor common or motor contract carrier of property transportation of food and other edible products (including edible byproducts but excluding alcoholic beverages and drugs) intended for human consumption, agricultural limestone and other soil conditioners, and agricultural fertilizers, when such transportation is provided with the owner of the motor vehicle in the vehicle (except in emergency situations). After issuance of authority, such transportation (measured by tonnage) shall not exceed, on an annual basis, the transportation provided by the motor vehicle (measured by tonnage) which is exempt from the Commission's jurisdiction under 49 U.S.C. 10526(a)(6).
[ ] Transportation for the U.S. Government of used household goods which transportation is incidental to a pack-and-crate service on behalf of the Dept. of Defense.
[ ] Motor carrier broker of general commodities (except household goods).

IV. Will granting the authority or exemption sought in this application constitute a major Federal action having a significant effect on the quality of the human environment? [ ] YES [ ] NO. If YES, a statement complying with the requirements of 49 CFR 1108 must be attached to this application.

V. Is this application a major regulatory action under the Energy Policy and Conservation Act of 1975? (Refer to 49 CFR 1106.1 through 1106.6, especially 1106.5). [ ] YES [ ] NO. If YES, attach information as to why this proceeding is a major regulatory action, and a description of important energy impacts.

VI. Does applicant hold a certificate of registration as a single-State operator? [ ] YES [ ] NO. If YES, identify number

---

VII. Common Control:

(a) Indicate any interest (whether stock, loans, voting, or management arrangements) which the applicant, or any officer or director of applicant, has in the affairs of other I.C.C. regulated transportation companies. If none, check here [ ].

(b) Indicate any interest (whether stock, loans, voting or management arrangements), which any I.C.C. regulated transportation company including officers and directors, or any person authorized to control such a company, has in the affairs of applicant. If none, check here [ ].

(c) Indicate any interest (whether stock, money, or management arrangements) in the applicant held by any person who also holds an interest (whether stock, money, voting, or management arrangements) in another I.C.C. regulated transportation company. If none, check here [ ].

(d) If any interest has been indicated in (a), (b) or (c) above, state whether this interest has been approved by the Commission in an appropriate proceeding (give docket number) or explain why Commission approval is unnecessary.

VIII. Contract Carrier Applicants Only:

(a) If applicant seeks contract carrier authority, list the person(s) or firm(s) it would serve in the proposed operation:

(b) If applicant seeks motor contract carrier authority, state the ways in which statutory provisions are to be fulfilled [i.e. either (1) by furnishing transportation service through the assignment of motor vehicles for a continuing period of time to the exclusive use of each person served, or (2) by furnishing transportation services designed to meet the distinct need of each individual customer, and if the latter, describe briefly the distinct need

for which transportation services have been designed]:

IX. Map Submittal:

Applicants for regular-route motor carrier authority and applicants for irregular-route authority who employ unusual geographical descriptions in their request for authority (such as rivers or highways) shall submit a detailed map of the proposed operation. Regular-route applicants shall also indicate pertinent connecting portions of their present authority with their proposed authority.

X. Caption Summary:

All applicants must submit an original and one copy of a caption summary, which lists (a) the name and address of the applicant and applicant's representative and, (b) a description of the authority sought. This shall be on a separate sheet of plain paper.

XI. Support from Public Witnesses [Check one or both]:

Is this application supported by public witnesses other than applicant itself [ ] or is it based on other types of evidence [ ]?

Applicant's Oath

I, ————(Name), verify under penalty of perjury under the laws of the United States of America, that the foregoing is true and correct. In addition, I verify that the information submitted in applicant's verified statement and all other evidence to be filed by applicant is true and correct. Further, I certify that I am qualified and authorized to file this application. (Note: knowing and willful misstatements or omission of material facts constitute federal criminal violations punishable under 18 U.S.C. 1001 by imprisonment up to 5 years and fines up to $10,000 for each offense. Additionally, these misstatements are punishable as perjury under 18 U.S.C. 1621, which provides for fines up to $2,000 or imprisonment up to 5 years for each offense.)

———————

(Signature and date).

Certificate of Service

I certify that I have delivered a copy of this application, in person or by mail, to the Regional Director of the Commission's Office of Consumer Protection for the Region in which the applicant has its headquarters.

I further certify that I have delivered a caption summary in person or by mail to the appropriate State Board (or official) of applicant's State of domicile. If a copy of the application is desired by the appropriate State Board (or official) in any State in or through which the operations described in this application would be performed or by the State Board of applicant's domicile, I will mail it upon written request.

———————

(Signature)

Appendix—Certification of Shipper or Witness Support

Instructions:

1. Notarization of this statement is not necessary.

2. Where the space provided is not sufficient, it is permissible to label a plain sheet of paper "Appendix" and, using the same numbered paragraphs, answer the questions in greater detail.

3. If you need additional copies of the Appendix for applications supported by multiple witnesses, you may reproduce the blank form. Mark one as original and have the witness sign that form.

4. Witnesses may be testifying as to their personal transportation needs, e.g., passenger applications. These witnesses need not answer 1 and 4 under question II.

* * * * *

I. I, or the company which I represent, support the application filed by

———————

(Name of applicant) to the extent that applicant seeks authority to (describe commodities and territory sought by applicant which you support)————

II. The following information describes the type of freight or passenger traffic movements which could be made by me or my company.

(1) Legal name and domicile of company or organization:

(2) Identity of witness. If representing a company, why qualified to offer evidence: (as, position with company and experience):

(3) General description of company, and any relevant facility locations:

(4) Description of commodities which will or may be transported under the authority. List actual commodities. Do not merely repeat the applicant's caption summary or generic commodity descriptions:

(5) Volume and frequency of traffic that will or may be tendered to applicant if the application is granted. In passenger applications, given number and frequency of trips. List projected volumes or future needs, if applicable:

(6) Describe the geographical movement of the involved traffic, and provide actual, future, or representative origins and destinations from and to which the traffic will or may be transported (in passenger applications, points from and to which witness will or may travel). List origins and destinations separately.

(7) Transportation services now used, if any:

(8) Unsatisfactory aspects of these services, if any:

(9) Specialized service needs, if any:

(10) Any other information:

I, ————, verify under penalty of perjury under the laws of the United States of America, that the foregoing is true and correct. If representing a company or organization, I certify that I am qualified and authorized to offer this evidence. I know that willful misstatements or omissions of material facts constitute federal criminal violations punishable under 18 U.S.C. 1001 by up to 5 years imprisonment and fines up to $10,000 for each offense, or punishable as perjury under 18 U.S.C. 1621 by fines up to $2,000 or imprisonment up to 5 years for each offense.

———————

(Signature and date)

Instructions

1. First-time applicants are strongly urged to request the Commission for a publication designed to assist persons to understand the application process. It is available from Commission regional and field offices and the main office in Washington, D.C. Failure to consult this guide may lead to an incomplete filing which could be rejected.

2. Applications shall be either typewritten or written in ink. Applications made out in pencil will be rejected.

3. If the space provided in the form or appendix is not sufficient, attach separate sheets with applicant's name on the top, and use the same number as the paragraph in the form to which the answer refers.

4. Where a question or item is not applicable, leave the space blank or write "N/A".

5. Be sure to send in the correct application fee, and an original and one copy of the application form.

6. Assistance in filling out forms may be obtained from Commission regional and field offices. Before requesting assistance, prepare a draft of the application: to be used for discussion purposes.

7. Keep a copy of the application for future reference.

Appendix C—Internal Handling and Flow Charts

The first 30 days an application is at the Commission (the time prior to Federal Register publication) is taken up with: (1) Mail room receipt, logging and forwarding, (2) clerical review in fee branch and possible rejection if critical

parts of the application are missing, (3) fee collection and recordation, (4) docket number assignment, (5) Chaindex master record creation, (6) case status record creation for computer system, (7) service cards preparation, (8) docket file creation and filming for public use, (9) confidential file creation for decision writers, (10) review board review and possible correction of Federal Register notice, (11) notice reproduction and release to Federal Register clerk, (12) notice release to Federal Register for composition, and printing by Government Printing Office (8 day cycle), and (13) Federal Register publication.

We note that through diligent effort we are now publishing the applications within the projected 30-day time frame, as compared to the 3 to 6 month delays experienced in 1979 and early 1980.

The public should also understand that the case load itself creates complexities. It is more efficient to use trained specialists for each step. Due to the large flow of proceedings, entire offices may be devoted to one step. Each step requires physical transfer of files, although our computer network has helped reduce this problem in the past few years.

Protestants' statements are due at the 45th day from publication, usually, about the 75th day from filing. However, a letter containing a pleading does not automatically find its way into the appropriate docket and confidential file on the 75th day. The mail room must properly route the pleading, and the pleading must be recorded. The pleading is given to the appropriate application processing team, and the confidential file is finalized for submittal to the decisionmaker. The case is assigned (without the rebuttal) to the Office of Hearings where a hearing is required, or, more typically, to the Section of Operating Rights for continued modified procedure handling. Cases are allocated to individual staff members according to the currency of their workload. However, preparation of a decision cannot be begun until some days after the applicant's rebuttal is filed, received, and recorded, or about the 90th to 100th day.

The decisionwriter, typically an attorney, has other responsibilities in addition to decision writing, which include responding to numerous inquiries from the public, preparing policy and rulemaking papers, and performing other legal research projects.

Once the decision is written, it must be typed, usually on a unit which preserves the draft so that editing can be accomplished. It is then referred to a review board for decision, which requires review by three board members. Corrections may be made at that point, and the decision is typed in final form. At the present time, we expect the review board to receive the "average" case at about the 135th day from filing. A case of large magnitude, however, may take several more days at each step, and every step in the process we have just mentioned is harder if the magnitude of the case is substantial.

Once a final decision is reached by the review board, and final typing is accomplished, the case must be served on the public. Decisions must be printed in substantial number for internal and external distribution. Once again, the larger the case, the more time it takes to print. For this reason, the review board in the average case should be given a total of 45 days prior to service. In many instances, this will be more than sufficient time. However, the review board members may disagree among themselves or with the drafter of the decision, and substantial rewriting may occur.

Finally, every step in the process, including final decision, must be recorded, not only for the sake of public inquiry, but to enable us internally to keep track of our deadlines.

BILLING CODE 7035-01-M

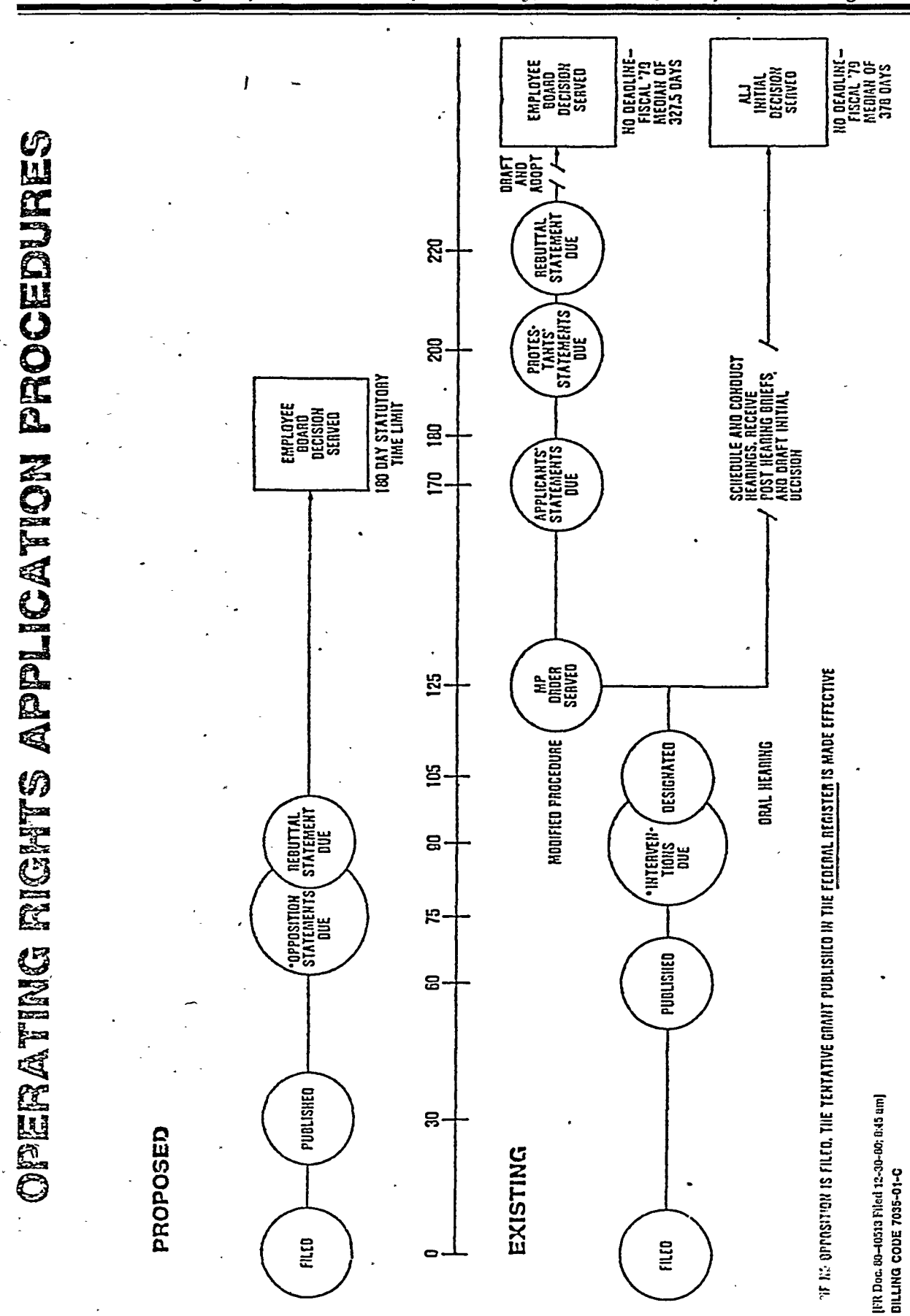

[FR Doc. 80-40513 Filed 12-30-80; 8:45 am]
BILLING CODE 7035-01-C

INTERSTATE COMMERCE COMMISSION

[Ex Parte No. 55 (Sub-No. 43A)]

Acceptable Forms of Requests for Operating Authority (Motor Carriers and Brokers of Property)

AGENCY: Interstate Commerce Commission.

ACTION: Policy statement.

SUMMARY: The Commission issues this policy statement to guide carriers in requesting authority under the Motor Carrier Act of 1980. Carriers are now to apply for broad, unencumbered authority. Commodities shall be stated in terms of generic groups. Territories are to be countywide or larger for irregular-route carriers and between points in the United States for contract and most fitness-only carriers. Two-way routes with no intermediate point restrictions are to be applied for by regular-route carriers. Restrictions will be allowed only in highly unusual cases.

EFFECTIVE DATE: This policy statement applies to all applications for motor carrier and broker of property authority filed after December 31, 1980.

FOR FURTHER INFORMATION: Ombudsman's Office, 202-275-7440; David B. Gaynor, 202-275-7904; Edward E. Guthrie, 202-275-7691.

FOR COPIES OF THIS DECISION: The Federal Register publication does not contain Appendix B, which is a summary of the public comments received. The Commission will publish the entire decision, copies of which may be obtained by calling 202-275-7307 or 800-424-5230.

SUPPLEMENTARY INFORMATION: The Motor Carrier Act of 1980 (the Act) establishes as Federal Policy the promotion of competition and efficiency among carriers and brokers of property. See 49 U.S.C. 10101(a)(7). The overall purpose of the Act is to reduce unnecessary regulation by the Federal Government. See Section 2 of the Act. We are to implement these policies in the entry area by granting broad authorities to future applicants and by removing unnecessary burdens on those now operating. This policy statement is designed to accomplish the goal of awarding broad authorities to future applicants. The removal of existing burdens will be accomplished in final rules to be adopted in Ex Parte No. MC-142 (Sub-No. 1), *Removal of Restrictions, Motor Car. of Property,* 132 M.C.C. 114 (1980), and Ex Parte No. MC-142, *Elimination of Gateway Restrictions,* 132 M.C.C. 174 (1980).

Broad authorities are necessary to effectuate the National Transportation Policy, as amended by Section 4 of the Act [49 U.S.C. 10101(a)(7)], which directs us:

> with respect to transportation of property by motor carrier, to promote competitive and efficient transportation services in order to (A) meet the needs of shippers, receivers, and consumers; (B) allow a variety of quality and price options to meet changing market demands and the diverse requirements of the shipping public; (C) allow the most productive use of equipment and energy resources; (D) enable efficient and well-managed carriers to earn adequate profits, attract capital, and maintain fair wages and working conditions; (E) provide and maintain service to small communities and small shippers; (F) improve and maintain a sound, safe, and competitive privately-owned motor carrier system; (G) promote greater participation by minorities in the motor carrier system; and (H) promote intermodal transportation.

Three principal considerations underlie our view. First, highly restricted authority narrows the range of operational options available to carriers and prevents them from making optimally efficient use of their equipment. It compromises overall efficiency and necessarily increases fuel use. At the same time, it prevents carriers from offering service designed to meet the full extent of a shipper's needs or responding promptly to changing market demands.

Second, restricted authority compromises the ordinary competitive activity of motor carriers and blunts the opportunity of carriers to attack markets that may be inadequately served. Since the time required for processing entry applications often exceeds the time needed for carriers to adjust their business operations, narrowly drawn authority serves as a genuine barrier to allowing a variety of quality and price options to meet changing market demands and the diverse requirements of the shipping public. The grant of broader authority will, at the same time, create a larger class of potential entrants and thus place increasing pressure on incumbent operators to offer responsive service.

Third, narrowly drawn authority contributes to the unnecessary economic costs associated with regulatory processing by injecting the Commission into the regulatory arena even in circumstances in which no public purpose is served by our involvement. The facts that 60 to 70 percent of the applications for permanent authority are unopposed, and that upwards of 95 percent of the applications are granted, strongly suggest that the Commission becomes involved more often than necessary. While the continuation of the licensing process requires that we scrutinize requests for entry into the industry or expansion of existing carriers into new markets, direct regulatory intervention should occur only when the operation of market forces would be inadequate to achieve the performance goals which the National Transportation Policy largely assumes will result from competition. While the creation of broader commodity and geographic descriptions is only one tool, we believe it will go a long way toward reducing unnecessary regulation by the Federal Government in furtherance of the Congressional mandate.

Specific provisions of the Act reinforce our view. Under Section 6 of the Act ["Removal of Certain Restrictions on Motor Carrier Operators," 49 U.S.C. 10922(h)], we must eliminate gateway and other unnecessary restrictions, circuitous route limitations, and unreasonably limited commodity and territorial authorities. Logic dictates that, if we take these actions for carriers with existing authorities, we must also assure that future authorities are not subject to the same defects the Congress perceived in our past practices. It is obvious that competition and efficiency on the scale envisioned by the Congress cannot be achieved if we broaden existing authorities, while continuing to grant narrow authorities. We would thereby create a class of competitively disadvantaged carriers (at least initially), which would be entirely inconsistent with the purposes of the

Act. These considerations support our inference that we must grant broad, unencumbered authority to future applicants.

Furthermore, we do not believe that Congress intended that contract carrier authority be limited with respect to territories or industries. See 49 U.S.C. 10923(d)(1). We are also to grant authorities to certain carriers upon only a showing of fitness. See 49 U.S.C. 10922(b)(4) and (9), 10923(b)(5)(A), and 10924(b). Finally, since motor carrier dual operations are no longer of significance, we also cannot prohibit authority because of carriers' dual capacities. Thus, many actions we take here are not really matters over which we may exercise discretion, but rather are mandated explicitly by the Act.

In our notice proposing this policy statement, we indicated we would implement this new policy by directing future applicants to follow certain guidelines in casting their requests for authority. Briefly, these call for descriptions of commodities in terms of groups based on the Standard Transportation Commodity Code (STCC), and routes or territories in broad terms. As a general rule, no restrictions would be allowed except in highly unusual instances.

The comments largely support our proposed policy. Most believe, as we do, that Congress intended significant changes in the way we issue authorities. However, others disagree both with this statement and with our fundamental view of the extent of the Act.

Overall, these comments lead us to confirm our proposals. We shall now grant authorities in terms of generic groups, which describe territories and routes on a reasonably broad basis, and with virtually no restrictions.

The major change from our original proposal is our decision not to prescribe the exact form of commodity descriptions. Instead, we shall leave to each applicant the selection of a broad description that it believes will best meet its business requirements. Since we are required to eliminate unreasonably narrow descriptions, we expect applicants to employ commodity descriptions which are at least as broad as the standard industry groupings we earlier proposed. Our Employee Boards will screen applications to ensure that broad commodity descriptions are being used. But the choice over the scope of the broad commodity description is in the hands of the applicant. Carriers are to be able to perform as complete a service as possible for shippers, with competition—not narrowly limited authority—defining the boundaries of service.

Preliminary Matter

There are a number of requests for oral hearings in this proceeding. We have received extensive and cogent representations in this matter and find no need for oral argument. In addition, we are dealing with guidelines, not binding rules. When a party sufficiently justifies a need for a variation from a guideline, we are free to consider and adopt that position in that application. Unusual items not covered are those best addressed in individual applications.

Jurisdictional Matters

This Commission is empowered to issue appropriate authority to persons wishing to conduct operations pursuant to the provisions of the Act. See 49 U.S.C. 10922, 10923, and 10924. This implies the ability to determine how grants of authority are to be framed. See 49 U.S.C. 11102. Our duty is to ensure that they are broad and unencumbered to promote competition and efficiency.

Attacks on our proposal are made on five principal grounds:

(1) The Act gives us the ability to eliminate only clearly unnecessary language in existing authorities.

(2) Grants based on the proposed descriptions would usually go beyond the public need shown.

(3) Extremely broad grants are tantamount to master licensing.

(4) Extremely broad grants carry with them duties wider than the recipients can realistically meet under their common carrier obligation.

(5) The terms of the policy statement are so direct that the statement is actually a rulemaking and must be conducted as such.

Finally, we are asked to state whether this proceeding applies to passenger applications. We shall address each of these matters in turn.

A. Ability Limited To Changing Terms of Existing Grants.

Section 6 of the Act only addresses removal of constricting terms in existing authorities. Some commentors thus argue that, as a matter of law, we have no ability to change the type of terminology to be used in future grants of authority. We disagree. This argument assumes that in the past we followed a conscious policy of issuing only picayune grants. Our policy, however, has been to issue authority as broad as warranted by the circumstances. It is true that there are (unfortunately, in our mind) numerous instances of limited authorities. This resulted largely from applicants who narrowly framed their initial requests for authority and subsequently restricted to avoid litigation expenses and delays. These authorities do not exemplify our policy, but reflect, instead, a recognition by applicants that, during an earlier regulatory period when the prosecution of applications was time-consuming and expensive, it was more prudent to accomodate the interests of one's competitor rather than litigate the full scope of the needed authority. While we were not unsympathetic to these motives in the past, their legitimacy has been substantially undermined by the procompetitive substance of the Motor Carrier Act of 1980 and the changes we are making in the procedural infrastructure of the licensing process.

In any event, Section 6 implicitly confirms that new authorities be framed in broad terms. Surely, Congress would not have directed us to broaden existing authorities unless it intended that future grants would be of equal latitude. The inference is clear that Congress sought to achieve a parity in the scope of the operating rights of existing carriers and new entrants.

Equally important, we are not prescribing limited lists of acceptable commodity or geographic descriptions. We are, instead, establishing guidelines for acceptable minima. In the commodity area in particular, we are prepared to entertain applications using commodity descriptions different from those proposed in our original notice as long as they are not unreasonably narrow. We appreciate that Congress did not specifically direct us to standardize commodity descriptions, and we shall not do so. We will accept reasonably broad commodity descriptions in the future, even if they are not the group used in STCC.

B. Grants Beyond the Public Need Shown.

We go beyond public need, according to opponents, because we will necessarily authorize more commodity and territorial authority than is warranted by the evidence. Carriers seeking authority must show that their proposals would serve a useful public purpose, responsive to a public demand or need. Therefore, in the opponents' view, we must examine each application minutely and grant only to the actual extent of support given.

We believe this view contains hypotheses which too narrowly interpret the evidentiary bases on which we may grant authorities. The Act does not limit us merely to considering and granting authorities based on shipper support or presently moving traffic. Just as in the past, we may consider other evidence,

such as traffic studies or anticipated future movements. And we are to consider all evidence in light of a number of factors, most notably those in the National Transportation Policy [49 U.S.C. 10101(a)(7)]. Therefore, we must weigh in each application, when applicable, "a need or demand for new services, innovative quality or price options, increased competition, greater fuel efficiency, improved service for small communities, improved opportunities for minorities, and any other benefits that would serve a useful public purpose." H. Rept. No. 96-1069, p. 15. Shipper support is only part of a schematic representation which can evince a public purpose sufficient to justify a grant of new authority. Other evidence can and will be considered, and grants broader than existing shipper needs can and will be made.

It is well established that the Commission can grant authority based on representative evidence. Thus, a grant of Statewide authority has never needed support from all, or even most, municipalities in the State. All that has been required is a representative number. Similarly, broad commodity descriptions have been granted based on evidence of a representative showing of commodities falling within that broad description. Our proposal, therefore, does not represent any significant departure from prior decisional norms in many cases.

C. Grants Tantamount to Master Licensing.

The argument that we are engaging in master licensing is without merit. The sections prohibiting master licensing, 49 U.S.C. 10922(b)(3) and 10923(b)(6), state that we may not make findings of public need based upon general findings developed in rulemaking proceedings. Since we shall be making findings of a need for service in each application in accord with the procedures and standards affirmatively stated in the Motor Carrier Act of 1980, no master licensing is involved.

D. The Common Carrier Obligation.

We do not believe that the common carrier obligation present a problem. We frankly admit that the traditional view of the common carrier obligation is in some respects in conflict with our expression here. On the other hand, we do not believe the Congress would have charted this course for us if the traditional view dictated an absolute and inflexible aproach to the issue. We shall be examining this question in a separate proceeding where our views will be set out more fully.

E. Policy Statement as Opposed to a Rulemaking.

This policy statement need not be renoticed as a rulemaking or dismissed entirely, as some commentors suggest. The opponents to our proposal [citing such decisions as *American Bus Association* v. *United States*, 627 R.2d 525 (D.C. Cir. 1980)] are in essence arguing that this policy statement leaves no room for discretion in its application.

We note, as a threshold matter, that the court's concerns in the *American Bus Association* case involved our failure to offer interested persons an opportunity for comment before implementing our proposal. In the instant case, we gave full notice of our proposal in the Federal Register, received comments from interested persons, and have modified our proposal in light of those comments. Consequently, even if our proposal was to be considered a rule instead of a policy statement, we have fully complied with the procedural requirements of 5 U.S.C. 553. Moreover, the court in *American Bus Association* was concerned with the retrospective application of policy statement under review. Our instant proposal is prospective in nature only, and therefore not subjhect this concern expressed by the court.

In any event, what we propose is not mandatory. If an applicant justifies the use of another reasonably broad description of the authority needed, we will allow that description to be used.

For the reasons stated above, we will also not void authority granted since July 1, as requested. Based upon the evidence presented when reviewed under the new statute, the grants have been properly made.

F. Passenger Applications.

This notice applies only to the transportation of property. To extend it to regular-route passenger applications would be unwarranted for several reasons, not the least of which is that the new Act does not appreciably apply to passenger carriers. Legislation in this area is in its formative stages. We can make corresponding changes, if warranted, after it is adopted.

Acceptable Commodity Descriptions

Many of the commodity descriptions we have authorized in the past have given carriers less authority than they needed to perform a complete service for the public. Authorizations of less than the total public need can no longer be tolerated. Only when carriers can provide complete service to an industry, area, or other cognizable part of the economic spectrum do we have the type of competition and efficiency envisioned by the National Transportation Policy [49 U.S.C. 10101(a)(7)].

In our notice, we proposed that applicants seek broad authorities by requesting commodity descriptions similar to the groupings of the STCC. In light of the comments filed, we are now of the view that the STCC should not be mandatory. Instead, we shall permit applicants to seek authority commensurate with their business requirements as long as the requested authority is not unduly narrow. While STCC describes many groups of commodities, it alone is not enough because it does not necessarily combine groups of commodities in the same grouping as we may authorize, e.g., bulk commodities. Moreover, the STCC groupings do not contain a fixed, exhaustive list of all commodities that may be transported under the various types of broad authority we intend to grant.

A STCC group or any other group will not limit the holder of authority to transporting only those items given on any specific list defining that group. Any other description proposed will be considered acceptable *if* it is as broad or broader than the STCC groupings.

STCC, or any other group, does not limit the holder to transport only those items listed under a STCC generic group. Rather, the carrier shall also be able to transport all items that logically can be categorized as part of the group and any other commodities that relate to the manufacture or distribution of the specific items. Again, this recognition of implied authority as a corollary to a specific grant is hardly revolutionary.

What we mean when we speak of all items that can be categorized as part of a group is that a carrier, upon making a representative showing of items to be transported, will be authorized to transport any item generally accepted as being within the ambit of the group. This is the concept we now employ when we determine the scope of a carrier's authority which is described in terms of one of the categories listed in *Descriptions in Motor Carrier Certificates*, 61 M.C.C. 209 and 766 (1952), but which is not limited specifically to items in the *Descriptions* case. In these circumstances, carriers are allowed to transport any item logically in the *Descriptions* group, regardless of whether it is specifically listed.

Related to the manufacture or distribution of items shall mean that a carrier will be able to move the named items, all materials, equipment, and supplies used in the manufacture or

distribution of the items (including advertising), all return or rejected shipments, all empty returned containers, and all parts and accessories to the items. In other words, the authorization is intended to let the carrier transport items reasonably implied in the grant. Therefore, when we authorize a carrier to transport a group, we will authorize a carrier to transport the commodities logically related to it in that group. Once a representative showing of the group is made, we will consider a need for the entire group proven and shall authorize a carrier to perform a complete service. A similar approach has been used by the Commission in the past. For example, no specific authority to transport accessorial commodities and advertising materials in conjunction with and at the same time as authorized commodities is required. The authority to do so was implied. See *Pre-Fab Transit Co., Ext.—International Falls,* 112 M.C.C. 664, 692–94 (1970), *Warren Transport, Inc., Ext.—Lodi, NJ,* 119 M.C.C. 107, 116–17 (1973). A representative showing will be deemed sufficient to constitute a prima facie case of need for the entire group. Such an approach, we believe, is consistent with the overall statutory and regulatory objections described here. Carriers will be expected to ask for groups like those stated in Appendix A whenever possible as these reflect our determination of what constitutes reasonably broad descriptions and most conform to the authorizations we will make.

Our proposal has drawn a number of comments with respect to the specifics of the STCC code. Many remark that we should use another set of descriptions in our authorities. Other views are expressed about: (1) those STCC categories, subdivisions, and exceptions which should be included or excluded, (2) how we should deal with unclassified commodities and private industry classifying them, and (3) whether materials, equipment and supplies should be included in each group.

A. The Descriptions To Be Used.

Most of the concerns over the employment of the STCC code are rendered moot by our decision to make the code permissive rather than mandatory. We do, however, urge the use of the descriptions in Appendix A whenever possible, as it best illustrates the generic forms of authority which we believe consistent with the statutory requirement that we broaden unreasonably narrow descriptions. Other alternatives suggested by the comments—retention of certain existing descriptions, use of descriptions based on the National Motor Freight Classification (NMFC), the *Descriptions* case, the Standard Industrial Code (SIC), or those proposed in Ex Parte No. MC–135, *Master Certificates and Permits*—have merit (if modified to generic forms). These suggestions, although offering alternatives to the STCC code, nonetheless reinforce our view that the shipping and trucking communities recognize the utility and desirability of reasonably broadening commodity groups into an understandable, yet discrete list—even though given commentors may disagree as to the precise scope of the list. While we see no need to discuss potential alternatives to the STCC code in the context of this proceeding, we offer our view on the alternatives presented to give the public some guidance concerning commodity descriptions likely to be accepted in the future.

We believe, in general, that NMFC and SIC contain too many classifications, while *Descriptions* and Ex Parte No. MC–135 in their present form do not cover the full range of commodities carried, contain too few. NMFC, which now provides thousands of groupings, would have to be pared to a number and type almost identical to the STCC to achieve a useful purpose. SIC, as proposed with modifications by North American Van Lines, suffers from this same fault. Even though it is organized in terms of industry rather than commodity, there are too many categories which, when pared down, will given roughly the same number and kind as those under the STCC approach. *Descriptions* and *Master Certificates,* on the other hand, would have to be expanded to cover all categories in a fashion that is not unduly narrow.

Thus, none of the alternatives appears to be more realistic than STCC as reflective of our overall objectives.

B. Items To Be Included or Excluded from STCC.

Numberous comments ask us to combine two categories into one category, subdivide categories, exclude types of traffic from categories or add additional categories.

We need not address these issues since we have decided to leave to individual carriers the option of selecting those reasonably broad commodity definitions which best meet their business needs, either immediately or in the reasonably near future. In this connection, we reject the suggestion of those commentors who argue that we should preclude a carrier from seeking authority to carry goods unless it currently holds the proper equipment. The holding of operating authority from the Commission in a broad form has the salutary effect of making those certificate holders potential entrants into new markets once equipment is obtained and there is no regulatory reason to restrict the certificate only to those specific commodities for which the carrier currently possesses the requisite equipment. We will, instead, leave those operational and marketing determinations to managerial discretion.

For similar reasons, we see no public interest purpose in expressly excluding particular items from various categories.

We will make one exception relating to general commodities. In our notice, we proposed to exclude household goods and classes A and B explosives from this authority. Household goods were to be excluded because of pending legislation and classes A and B explosives because of safety reasons. We now decline to except household goods, but classes A and B explosives shall remain excluded for safety reasons. The Household Goods Transportation Act of 1980, as finally passed, did not set up an exclusive licensing category for household goods. Since there was no other reason for our original proposal to exclude household goods from general commodities, we will not do so. As we have stated, type of service is no longer a valid reason to exclude a subcategory of goods.

We offer two observations with regard to aggregating commodity groups. On the one hand, some comments suggest that we allow a composite of several proposed groups where a new field-of-service description is better suited to the needs of the industry. This appears reasonable. Included now as groups will be commodities in bulk, commodities which because of their size or weight require the use of special handling or equipment, household goods, building materials, and *Mercer* commodities [*Mercer Extension-Oil Field Commodities,* 74 M.C.C. 459 (1946)]. These categories all deal with specialized services for a variety of goods that would fall into several STCC groups. Since the field-of-service terminology is consistent with the generic view of licensing and is attractive to both carriers and shippers, we will allow its use in the instances described above.

On the other hand, we are urged by some commentors to segregate commodities within existing groups. Commodities such as mail and express traffic, freight forwarder traffic, shipper association traffic, and traffic under the descriptions of such commodities as are dealt in or used by specific business concerns are all within the category of

general commodities and carriers should consider whether they wish to receive general commodity authority, although we plainly do not foreclose applications narrower than requests for general commodity authority. Secret and sensitive materials will be deemed as subsumed in ordnance and accessories for our purposes. Drugs and alcohol, as requested by Nelson and Harding, are chemicals and food products respectively and they should be so applied for.

C. Addition or Reduction of Items.

Many commentors suggest we have special petition proceedings to determine in which group a new commodity belongs. However, we shall deal with unclassified items as we always have. New items may be transported under any logical generic category until there is a formal determination to the contrary. Our use of generic terms does not limit licenses specifically to the articles in the STCC listing, but includes anything logically within the ambit or the broad wording. This also means nongovernmental authorities do not control our lists, although their decisions will be given great weight in any determination we are called upon to make about the proper classification of an item.

D. Materials, Equipment and Supplies.

Congress, in mandating that we encourage competition and efficiency, intended that weauathorize carriers to perform complete services for shippers. We cannot grant less than authority for total service and remain within the statutory bounds.

Part of the complete services is the ability to transport those items needed to produce the principal goods. Requiring proof of the movement of these goods would obviously serve no purpose, because authority to transport them will be granted whether or not there is proof of their movement. We will therefore as a rule not require proof to authorize their movements as an adjunct to the principal commodities.

We note in this regard that the Commission has traditionally granted return authority for these commodities as a matter of course. Requests for materials, equipment, and supplies on return were rarely, if ever, protested. Thus, a stricter view as advocated by the commentors would serve no useful regulatory purpose. Moreover, in light of the Congressional policies evinced in 49 U.S.C. 10922(h)(1)(B)(iii), requiring that round-trip authority be provided, adoption of the commentors' stricter views are not warranted.

E. Summary.

In sum, we believe the use of a limited number of generic commodity descriptions will best serve the purpose of the new Act. The ones that carriers ordinarily should apply for are listed in Appendix A. All others are discouraged, and deviations will require some justification. Alternative descriptions must be framed in broad, generic terms.

Territorial Descriptions

The Act introduces new considerations in our determination of route and territorial descriptions in motor carrier authorities. As we considered in broadening commodity descriptions, we must consider the productive use of equipment (including fuel efficiency), the salutary effects of competition and potential competition, service to small communities, the promotion of intermodal transportation and the ability of carriers to meet changing market demands in considering geographic descriptions [49 U.S.C. 10101(a)(7)]. Furthermore, as previously explained, we must in the future grant authority free of gateway restrictions and narrow terriorial limitations. See 49 U.S.C. 10922(b).

In our notice, we proposed to implement these goals by using broad terms in route and territorial grants. While many commentors agree that we should issue broad authorities, a number question if there will be sufficient public support in most applications to warrant a grant of authority under traditional Commission or judicial decisions. The decisional standards for Commission action have been substantially changed by the Motor Carrier Act of 1980 and we believe that the critical underpinnings of the new law support our modest expansions of the geographic descriptions in most cases. We confirm their use and request that applicants, whenever possible, frame all future grants in these terms.

A. Common-Carrier, Irregular-Route Service.

We proposed three modifications to common-carrier, irregular-route authority to grant broader territories. They are use of two-way authorizations,[1] service areas no smaller in size than countywide, and receipt of authority to serve points in Alaska and Hawaii as part of an authorization to serve points in the United States. These changes should help eliminate the basic problem with irregular-route service as it pertains to the goals set forth above, namely the inability of existing carriers to provide needed service because they do not possess the necessary authorities.

The inability to provide service as it pertains to two-way authority manifests itself as an inability to return from the destination area with a load in spite of available traffic. The Act, in Section 6, recognizes this as a problem with existing authorities and directs that existing carriers be given two-way authorities to curtail this problem. We believe future grantees are in no less of a need for two-way authorities and that the bilateral imperative is equally valid for new entrants.

Commentors argue that we cannot grant such authorities automatically because carriers must still show public need for return service. We believe we can make such authorizations without specific evidence in this regard. We must as a rule authorize carriers to perform a complete service. With respect to specific commodity groups, this means granting the ability to carry all items needed in the goods' manufacture or distribution, as well as the goods themselves. The items needed in the manufacture or distribution (principally materials, equipment and supplies) are generally moving to the production facilities, for that is where they will be used. Congress recognized this in the part of Section 6 dealing with two-way authority. We interpret the legislation as intending that carriers get two-way authority not only for the identical items but also for material, equipment, and supplies. Thus, evidence of a public need for return service, while useful, is not necessary. The useful public purpose is inherent in the evidence for outbound movements.

Countywide minima are but a minor incursion but do begin to attack the problem of carriers having an insufficient service base. Carriers often cannot serve other consignors or consignees in the general area of existing customers because their authority is limited to plantsites or very narrowly defined places. Discouraging minute limitations on the area an irregular-route carrier can serve should cure this problem.

Comments about countywide service minima fall into four general groups. Many remark that typically there will be insufficient express support for authorizing an entire county, especially when support is limited to one shipper. Others state, with some justification, that authorizing counties will limit the authority carriers would otherwise receive through grants of commercial zones. The third group believes that, as

[1] Grants are to be framed radically, i.e., between points in * * *, on the one hand, and, on the other, points in * * * or nonradically, i.e., between points in * * *.

a policy matter, we should not authorize counties, because they are not integral economic units like cities. Finally, there is belief that the term county is too inexact, because places can better be described by city names and not all areas to be served are described as counties.

The sufficiency of evidence in support of authority for an entire county is, we believe, largely a residue from Commission and court decisions before the Motor Carrier Act of 1980. As discussed in more detail in our unanimous decision in *Art Pape Transfer, Inc., Ext.-Commod., in End-Dump Vehicles,* 132 M.C.C. 84 (1980), Congress has substantially altered the decisional standards in motor carrier licensing cases. While we do not purport to predict here what evidence would be sufficient in any given case to support a grant of new authority, we believe that the statutory directive to expand unreasonably narrow geographic descriptions, coupled with the new emphasis on competition and efficiency, should, by themselves, be sufficient to justify the grant of countywide authority in the absence of a showing to the contrary in a given case.

The commercial zone problem raised in the comments can be resolved by having an applicant seek authority to serve a city if that city's commercial zone is territorially larger than all points in the county in which the city is located. Thus in these circumstances the city and its commercial zone would be the territorial minima (e.g., Chicago, IL, rather then Cook County, IL).

We appreciate that a county is not necessarily an integral economic unit, i.e., a community. Since the countywide description is merely a minimum, the issue is the smallest unit which will be consonant with statutory policy. We believe most often this will be the county. We are not wholly inflexible on this point, however, and will accept an alternative geographic unit—such as a large city which is included physically within a county—if parties can show this would be justified and not inimical to Congressional policy.

Lastly, the problems of name recognition and county descriptions are not deterrents to our proposal. Most points recognizable by name are large enough to come within the commercial zone option. In any event, we expect applicants to seek authority much more extensive than the minimum. Grants for entire States would tend to obviate recognition problems.

The county description problem arises in very few situations and the rule proposed in Ex Parte No. MC-142 (Sub-No. 1), *supra,* offers an appropriate remedy. As stated there, counties mean a county in a State, a judical district in Alaska, a parish in Louisiana, a city, town or village in any State which is not administratively part of a county, New York, NY, Washington, DC, and their commercial zones.

Transportation to Alaska and Hawaii is authorized to encourage service to these points, especially by intermodal arrangements. The Sea-Land companies oppose the proposal on the basis of the difficulty in serving points in Alaska. This is not a reason for denying service to these points. Rather, we shall leave the decision to applicants and the marketplace. Where applicants justify a need for service in the entire United States, it will include service to points in Alaska and Hawaii.

B. Common-Carrier, Regular-Route Service.

Service over regular routes under our proposal is to be two-way, with authorization to all intermediate points and those off-route points specifically sought by applicants. Authorizations styled in this manner will provide for the productive use of equipment and service to small communities, two of the major goals of the Act.

Comments on these features of our proposal again question whether we can grant two-way authority without proof and also question whether prohibition of all intermediate point restrictions will lead to circuitous routes to avoid serving an unprofitable point.

Two-way authority, in our belief, goes to the very core of regular-route service which almost always is for general commodities. It is rare that a shipper or community would not have both inbound and outbound service needs. Our view here is analogous to the policy for irregular-route carriers, where every grant should include authority to ship the materials, equipment, and supplies needed to produce the items. Moreover, it is supported by Section 6 of the new Act, as previously stated.

We doubt that carriers will apply for irregularly shaped regular-route authorities to avoid serving some intermediate points. The Act gives carriers the ability to price their services at profitable levels so service to all points on a route should be desirable. Finally, service volume can the tailored to points where there is little traffic.

C. Contract Carriage.

Many commentors argue that we cannot automatically authorize service between points in the United States to contract carriers because there will be no support for such grants and since there will be problems with State regulations and insurance. On the other hand, the Contract Carriers Conference believes that this particular territorial authorization is exactly what contract carriers need to render complete service.

We are inclined to argee with the Contract Carrier Conference, and further believe that the Commission by law cannot limit the territorial scope of contract-carrier operations [49 U.S.C. 10923(d)(1)]. We do not intend to examine the territorial scope of a contract carrier's proposed operation. Any review of applicants' evidence in these applications must be limited to whether there is a need for service at all, not how extensive that need is.

Unacceptable Restrictions

Restrictions have been a part of motor carrier law since its inception in 1935. They have been imposed either to reflect accurately the service to be provided when there is no other means by which to describe the service or to protect the interest of protestants. In the latter connection, they have also been used over time to eliminate opposition by preventing authorization of competing services. See *Fox-Smythe Transp. Co. Extension—Oklahoma,* 106 M.C.C. 1 (1967).

No matter what reason is given for imposing restrictions, it cannot be denied that restrictions create burdens on interstate commerce. Our task has been to make sure that these burdens do not outweigh the benefits otherwise expected to flow from authorizations of service. We have made numerous expressions on restrictions to delineate those which are nothing but burdens. See *Fox-Smythe, supra.* Yet, there are many restrictions still being used which for one reason or another create wholly unwarranted burdens on commerce.

Congress in the Act has clearly instructed us to eliminate restrictions which needlessly burden interstate commerce. Carriers now must be authorized to make the most productive use of equipment and energy resources while meeting the diverse demands of the shipping public [49 U.S.C. 10101(a)(7)]. Carriers with existing authority may obtain this service goal by expanding their authority beyond narrow territorial and commodity descriptions and unreasonable restrictions, including those which are wasteful of fuel, inefficient, or contrary to public interest [49 U.S.C. 10922(h)]. We believe future grants should be equally as broad and as unencumbered as those which are to be cleansed through the restrictions removal programs. Therefore, we intend generally to disallow all restrictions except those implicitly or expressly

acceptable in the Act (as discussed in other sections of this decision).

The prior notice details how restrictions like those relating to facilities, interlining, equipment, and commodities militate against the purposes of the Act and therefore cannot be tolerated in the future. The comments on this subject confirm our original judgment. Those arguing for retention of the traditional types of restrictions claim that they are needed to prevent needless protests, that they delineate types of service and service areas, and that they are allowed by the Act since only unreasonable restrictions are to be prohibited.

We do not believe that restrictions are likely to affect protests under our current application process. The evidence filed with the application is the totality of an applicants case. Once a decision-notice is published in the Federal Register (prerequisite for protests), applicant will ordinarily receive the authority unless the protestants can show fitness problems or that the grant would be inconsistent with public convenience and necessity. Protestants have a difficult burden to bear, whereas applicant has already done all that is expected of it, although it may file a reply statement. Consequently, restrictions would save applicants little or no costs. The time differential between opposed and unopposed cases is also essentially inconsequential, given that all our decisions must be issued within strict limits. Totally unopposed applications are being decided in about 90 days while opposed applications are being decided in under 180 days. In sum, we see no real benefits to applicants by allowing restrictions and a large public benefit from not doing so.

Those stating that restrictions properly delineate services or service areas give a host of reasons. The American Trucking Associations believes this furthers economies and efficiencies because carriers can confine their service to the type they wish to perform. Others follow this argument by claiming that size and weight, automobile services, and bulk services all require special equipment that most carriers do not operate and should not have authority to operate since they cannot do so efficiently. In addition, proponents of bulk restrictions claim that many operators do not have cleaning facilities for bulk equipment, do not know the safety regulations for hazardous bulk items, and cannot meet the special insurance limits for the handling of hazardous materials. Lastly, proponents of plantsite, interline and related restrictions claim they are needed to define service that cannot otherwise be defined.

Once again we find none of these reasons persuasive in light of the National Transportation Policy to encourage competition. In the first place, the opposing arguments are based in part on the assumption that new carriers should not compete with existing services. The statute, however, assumes that overall transportation economies and efficiencies are obtained by encouraging competition. While it is true that every carrier does not operate every type of equipment all of the time, nothing is gained by limiting authorities merely because the applicant does not already have the special equipment. To do so would only tend to entrench the status quo contrary to the new Act. Secondly, the arguments assume that carriers will be required in the future to perform service to the full extent authorized in their certificates.

The Commission will consider the scope of the common carrier obligation. Full explanation of our ideas concerning the common carrier obligation will be presented in a future proceeding, along with an opportunity for the public to participate fully in the development of the final approach to the topic.

Also, nothing is gained by limiting service because of the special demands of bulk service. These demands are ones that can be mastered by others; thus, limiting authority because of them is unnecessary. Lastly, since territories can be framed without plantsite, interline, or similar restrictive language, the only purpose in continuing to use such language is to limit competition. This, of course, cannot continue.

Those arguing that we cannot foreclose restrictions aver that the Act only gives us the ability to eliminate obviously unreasonable restrictions from existing authority. As we have discussed throughout this statement, we do not view the Act in such narrow terms. We have the ability to specify what language is used in future grants as well as existing grants, and this ability includes prohibiting restrictive language.

Finally, we must discuss the future imposition of tacking restrictions on carriers' authorities. We believe that Congress enactment of Section 6 of the Act had the effect of precluding the future granting of authorities where gateways or circuitous routes would have to be observed. Clearly, Congress did not intend that we continue to grant authorities with defects similar to those to be removed. We also believe that it is reasonable to infer that Congress, in not addressing capability to tack but merely the existence of indirect routes, recognized and approved of the existing abilities of motor carriers of property to tack. These abilities are described in detail in Ex Parte No. MC-142, *supra*, at 176.

That being the case, it is incumbent upon us to decide what is the proper mechanism for motor carriers of property who wish to combine a proposed operation with an existing operation to provide a direct service.

Irregular- to irregular-route tacking has been largely abolished. As is explained in the final rules in Ex Parte No. 55 (Sub-No. 43), *Rules Governing Application For Operating Authority*, the proper, and more simple method, is for the applicant to request direct service in its application. So-called "gateway elimination" applications involving irregular- to irregular-route authority are forbidden in the future. However, this does not in any way alter the irregular-route applicant's ability to seek direct authority which would accomplish the same thing. We see this as more a change in form than in substance. The public will benefit, however, since many of the inherent complexities of gateway elimination proceedings will be avoided.

Regular- to irregular-route tacking (and vice versa), with resultant direct service being permissible, will continue to be allowed. The Commission will not entertain restrictions against tacking those combinations of authorities. The final rules in Ex Parte No. 55 (Sub-No. 43) indicate the proper caption summaries for those applications; irregular-route applicants have to indicate in their caption summaries the fact that they hold regular-route authority with which a direct service may be provided.

Fitness Only Applications

In our last report, we proposed individual descriptions for the seven different authorities to be granted upon a showing of applicant's fitness. The seven authorities are (1) transportation to a community not regularly served by a carrier, 49 U.S.C. 10922(b)(4)(A); (2) transportation as a substitute for abandoned rail service, 49 U.S.C. 10922(b)(4)(B); (3) transportation for the United States Government, 49 U.S.C. 10922(b)(4)(C); (4) transportation of shipments weighing 100 pounds or less when no shipment in the vehicle exceeds 100 pounds, 49 U.S.C. 10922(b)(4)(D); (5) transportation by an owner operator of food and related products when acting as a common carrier, 49 U.S.C. 10922(b)(4)(E); (6) transportation by an owner operator of the same products when acting as a

contract carrier, 49 U.S.C. 10923(b)(5)(A); and (7) brokers of property, 49 U.S.C. 10924(b). We here confirm use of our proposed descriptions for these authorities with some minor changes. We shall establish a new description for pack-and-crate authority which also is subject to fitness-only licensing by the Household Goods Transportation Act of 1980. See 49 U.S.C. 10922(b)(9).

A. The Descriptions in General.

We have received several comments that argue granting these authorities to points in the United States is broader than necessary. Authority not limited in territory, it is argued, is beyond the scope of the service to be provided by most applicants and will subject applicants to violation of the common carrier obligation. It will also create problems in obtaining insurance and complying with the requirement of a registered agent for service of process in each State.

We do not believe that excessive authority will be granted. Since these applications are based only on applicants' fitness, willingness, and ability to serve the public, not on a showing of public need for the service, limiting the territorial scope of the authority to protect competitors is a moot issue. Congress, in adopting specified "fitness" categories, has determined that the Commission shall have no economic regulatory control over this traffic. The only issue that remains for consideration is whether the carrier is fit, willing and able to perform the service, as set forth in the statutory definition. The only purpose in framing grants at all is where this is required to conform the authorized operation to the scope of the statutory definition. Thus, for example, the service authorized to a community not regularly served must be defined in terms of a community. Once having determined the proper extent of what a "community" is, we must end our attempt to describe further the terms of the service, since we are to have no role in assessing the economic impact of the authorized operation.

Lastly, we find no difficulty with insurance or registered agents. The comments argue that the costs of these items to a carrier with nationwide authority are so high that they will deter potential entrants from even seeking this authority in the first place. There is no evidence to support such a conclusion, and we see no reason to limit authority because of these theoretical problems. If however, experience shows that insurance and the designation of agents is a problem for the small specialized carrier we will of course, work with the industry to ameliorate any problems brought to our attention.

B. The Descriptions in Specific.

Comments about specific descriptions tend to address difficulties with either the scope of the authority underlying the description or the language we use in the description. The remarks will be summarized in our discussion of each topic.

1. *Transportation to Any Community Not Regularly Served by a Motor Carrier.*

This authority is designed to encourage service to communities with a chronic lack of supply. The Department of Justice (DOJ) remarks that we should not require a carrier to show that no service is ever available to such a community prior to granting this type of authority. We agree with DOJ that the terms "not regularly served by a motor common carrier of property" does not mean a community must have a total lack of service; rather, it means the community must have something less than adequate service from common carriers for its particular transportation needs. An example would be bulk service is not regularly available when there are bulk items regularly to be moved. However, the statute does indicate that unmet demand must be a recurring problem. Problems that create emergencies should be handled by obtaining emergency temporary authority; problems that recur should be handled by obtaining permanent authority. Infrequent problems should be handled by obtaining temporary authority.

The description to be used for this authority shall be the following:

To operate as a *common carrier*, by motor vehicle, in interstate or foreign commerce over irregular routes, transporting (commodity group)———between (the specified community(s)),———on the one hand, and, on the other, points in the United States.

2. *Transportation Service as a Direct Substitute for Abandoned Rail Service.*

This authority is issued as a direct substitute for rail service if an abandonment results in a community not having any rail service and if the application is filed within 120 days after we have approved the abandonment. The questions raised by commentors are whether authority under this section must always be for general commodities, whether the term "community" is synonymous with county (the minimum area we intend to authorize in other common carrier applications), and when does abandonment for purposes of this section occur.

We indicated general commodities is the proper description, because railroads typically handle all types of freight. Where lesser authority is appropriate we will entertain more limited applications. However, these situations should be rare.

The term community here, as well as in the previous section, is an exception to our county rule because of the statutory terminology. A carrier may apply for smaller sized areas where the evidence would support only that.

Abandonment for purposes of this section occurs when two things happen. First, all rail service to the community is eliminated by the abandonment in issue. Second, either the certificate of abandonment is issued by us or another pronouncement by us states abandonment has occurred. Carriers thereafter have 120 days from the date of issuance of either the pronouncement to file for this authority.

Applications for this authority shall read as follows: To operate as a *common carrier*, by motor vehicle, in interstate or foreign commerce, over irregular routes, transporting *general commodities* between———, on the one hand, and, on (the abandoned community(s)) the other, points in the United States.

3. *Transportation for the United States Government.*

The Act largely codifies the rules we adopted in *Transportation of Government Traffic*, 131 M.C.C. 835 (1980). The Department of Defense (DOD) therefore believes the description for government traffic should be the one established in those rules. The General Services Administration (GSA) further claims that the household goods exclusion should only run to so called "first proviso" traffic [as defined by the Commission at 49 CFR 1056.1(a)(1)], since "second" and "third proviso" traffic [49 CFR 1056.1(a)(2) and (3)] represent normal commercial freight. GSA also urges that hazardous materials should be defined as in *Government Traffic, supra.*

We agree with DOD that the description use in *Government Traffic, supra*, is generally appropriate, but there must be certain modifications. The description, slightly modified to comport with the terms of the Motor Carrier and Household Goods Acts, is set forth at the end of this subsection. However, we cannot agree that the definitions proposed by GSA for used household goods and hazardous materials are appropriate. They lack the proper context needed to apply the two new laws.

GSA's claim that second and third proviso commodities should be included in these grants (by limiting the exclusion

for household goods to the first proviso), misconstrues the meaning of household goods. The definition of household goods, now codified by the Household Goods Transportation Act of 1980 at 49 U.S.C. 10102(10), is nonexclusive. When an item listed under the definition moves by a carrier using the special handling and equipment associated with household goods, it is considered to be a household good. When the same item moves otherwise, as GSA claims can happen, it is within the ambit of general commodities authority. Thus, excluding of second and third provisio traffic from the exception would serve no useful purpose.

The *Government Traffic* decision does not use the term "hazardous materials" in its description. Rather, it refers to "classes A and B explosives, radioactive materials, and etiologic agents" as hazardous items to be excluded. "Hazardous materials" actually includes more items than these three classifications. A prominent example would be corrosive chemicals. Thus, the statutory exclusion of hazardous materials is broader than the ones we used in *Government Traffic, supra,* and we are bound to comply with the Act.

The description for these items shall be:

To operate as a *common carrier,* by motor vehicle, in interstate or foreign commerce, over irregular routes, transporting, for or on behalf of the United States Government, *general commodities* (except used household goods, hazardous or secret materials, and sensitive weapons and munitions), between points in the United States.

4. *Transportation of Shipments Weighing 100 Pounds or Less if Transported in a Motor Vehicle in Which No One Package Exceeds 100 Pounds.*

The commodity description of "shipments weighing 100 pounds or less" has resulted in some confusion. Commentors ask whether this should be phrased in the statutory language. Otherwise, as shown by one company's query, we will constantly be asked to state whether there can be other traffic in the same vehicle.

This provision is designed to encourage small shipment services. The statute not only eases entry for this particular type of service but also creates a class of contraband which cannot be moved in the same vehicle without destroying the authority. Thus, on any given day, a carrier is only allowed to ship a package or aggregate of packages weighing 100 pounds or less from one consignor to one consignee if no package in the vehicle exceeds 100 pounds. See H. Rept. 96–1069, p. 16. Any higher-weighted packages are contraband even if the carrier holds other authority under which they may be moved. We must agree that interpretative difficulties can best be overcome by using the statutory language. Therefore, all applications for this authority are now to be phrased as:

To operate, as a *common carrier,* by motor vehicle, in interstate or foreign commerce, over irregular routes, transporting *shipments weighing 100 pounds* or less if transported in a motor vehicle in which no one package exceeds 100 pounds, between points in the United States.

5. and 6. *Transportation by Either a Common or Contract Carrier of Food and Other Edible Products and Related Farm Items.*

Two points are raised by the comments we received about these authorities.

One states that we incorrectly describe the test for the amount of traffic an owner operator can handle. We stated that the operator can carry traffic in an amount equal to the exempt commodities transported, while the Act states an operator may transport an amount not to exceed the exempt tonnage transported. The correct usage of terms should be an amount not to exceed; thus, no owner operator may transport more than the exempt tonnage handled.

Second, several commentors ask what are the emergency situations in which the owner of the vehicle does not have to be in the vehicle as stated in 49 U.S.C. 10922(b)(4)(E)(i) and 10923(b)(5)(A)(i). These situations are under study in Ex Parte No. MC–143, *Owner-Operator Food Transportation,* 132 M.C.C. 165 (1980), and are beyond the scope of the instant proceeding.

Finally, we will rephrase these descriptions to a minor extent to eliminate verbiage. Carriers are now to use these two descriptions.

For common carriage:

To operate as a *common carrier,* by motor vehicle, in interstate or foreign commerce, over irregular routes, transporting *food and other edible products and byproducts intended for human consumption* (except alcoholic beverages and drugs), *agricultural limestone and fertilizers, and other soil conditioners* by the owner of the motor vehicle in such vehicle, between points in the United States.

For contract carriage:

To operate as a *contract carrier,* by motor vehicle, in interstate or foreign commerce, over irregular routes, transporting *food and other edible products and byproducts intended for human consumption* (except alcoholic beverages and drugs), *agricultural limestone and fertilizer, and other soil conditioners* by the owner of the motor vehicle in such vehicle, between points in the United States, under continuing contract(s) with (company) ———— of (domicile) ————.

7. *Brokers of Property Moving in Motor Carriage.*

We have received no comments on this proposal. We remind all applicants that the proper description is:

To operate, in interstate or foreign commerce, as a *broker* of *general commodities* (except household goods), between points in the United States.

8. *Transportation for the United States Government of Used Household Goods Which Transportation is Incidental to a Pack-and-Crate Service on Behalf of the Department of Defense.*

Section 10 of the Household Goods Transportation Act of 1980 adds this type of authority as one requiring only a showing of fitness. It pertains only to pack-and-crate operations performed on behalf of the Department of Defense. We will use authority between points in the United States for the reasons described above, although carriers are warned that the transportation must be incidental to their pack-and-crate service. Any line-haul service requires regular authority. So called pack-and-crate movements with no prior or subsequent line-haul service are expressly prohibited. The proper description is the following:

To operate, as a *common carrier, by motor vehicle,* in interstate or foreign commerce, over irregular routes, transporting *used household goods* for the account of the United States Government incident to the performance of a pack-and-crate service on behalf of the Department of Defense, between points in the United States.

We emphasize, in connection with all fitness-only applications, that the Congress has carved out specific categories for special treatment. Although, in certain circumstances, we are required to read the potential grants of authority narrowly, in conformance with the basic purpose of the statutory exceptions, nothing in our discussion should be understood to discourage applicants from seeking broader authority under the conventional certification process.

Energy and Environmental Considerations

The policy statement does not significantly affect the quality of the human environment or conservation of energy resources.

This statement is issued pursuant to 49 U.S.C. 10101, 10922, 10923, 10924, 11102, and 5 U.S.C. 553.

Decided: December 19, 1980.

By the Commission, Chairman Gaskins, Vice Chairman Gresham, Commissioners

Clapp, Trantum, Alexis, and Gilliam. Commissioner Clapp concurring in part and dissenting in part, and reserving his right to submit a separate expression at a later date.

James H. Bayne,

Acting Secretary.

Appendix A

The descriptions contained here are stated in the terms to be used in our authorizations. They differ from the list originally proposed in that they seek to group products better. The STCC number is given for reference only and is not to be asked for. The meaning of a group is to be determined by reference to STCC, as defined by our explanation in this statement, or, if there is no STCC, to the meaning usually ascribed by the Commission. Other descriptions may be used if they comport with the principles in the decision.

STCC

01—Farm Products
08—Forest Products
10, 14—Ores and Minerals
11, 29—Coal and Coal Products
13, 29—Petroleum, Natural Gas and Their Products
19—Ordnance and Accessories
20—Food and Related Products
21—Tobacco Products
22, 23—Textile Mill Products
24—Lumber and Wood Products
25—Furniture and Fixtures
26—Pulp, Paper and Related Products
27—Printed Matter
28—Chemicals and Related Products
30—Rubber and Plastic Products
31—Leather and Leather Products
32—Clay, Concrete, Glass or Stone Products
33, 34—Metal Products
35, 36—Machinery
37—Transportation Equipment
38—Instruments and Photographic Goods
40—Waste or Scrap Materials Not Identified by Industry Producing
49—Hazardous Materials
—General Commodities (except Classes A and B Explosives)
—Commodities in Bulk
—Those Commodities Which Because of Their Size or Weight Require the Use of Special Handling or Equipment
—Household Goods
—Building Materials
—*Mercer* Commodities

Appendix B

Comments received by the Commission indicate divergent points of view about both what the Motor Carrier Act of 1980 (the Act means for the industry and how we, through this policy statement, should interpret the Act. We here summarize the comments, categorizing each by the group represented. The categories are trucking and other associations, Commission practitioners, individual carriers, government agencies, and miscellaneous groups. The evidence is also summarized in the body of the policy statement.

A. Trucking and Other Associations

American Trucking Associations, Inc. (ATA), agrees with us that the intent of Congress is to have reasonably broad grants of authority in the future. However, it believes this proceeding goes beyond the Congressional mandate and attempts to master license carriers. As an example of this attempt, it cites our failure to deal with conversion of contract to common authority when a contract carrier holds points in the United States and is providing much less service. It also argues that we should treat the Notice and the comments received as an advanced notice of proposed rulemaking because the policy statement attempts to enact rules in a manner prohibited by *American Bus Association* v. *United States*, No. 79-1207 (D.C. Cir., 1980).

More specifically, ATA believes plantsite restrictions can be eliminated, but that countywide origins are too broad. It argues nothing is wrong with basing grants on representative showings, but if there is less evidence, carriers should be given an opportunity to limit their authority appropriately. ATA believes that equipment and service restrictions promote economies and efficiencies. It argues that without restrictions there is master licensing and the opportunity for unnecessary protests.

The majority of ATA's statement is devoted to commodity descriptions. It believes a code concept is workable. However, it believes the proposed STCC is too broad and not responsive to motor carrier transportation. As a result, ATA proposes a STCC code of its own using 51 parts and subparts. It also urges the Commission to allow for three types of descriptions to meet carrier needs. These are service descriptions, specific commodity descriptions and generic descriptions. It further urges that several common descriptions such as the size-and-weight descriptions should be kept so carriers do not have to ask for a myriad of STCC groupings. Finally, ATA comments that new items to a group should be Commission approved with carriers operating under temporary authority until approval.

Other trucking associations enter evidence as it pertains to their particular specialty area. The National Tank Truck Carriers, Inc. (NTTC), favors retention of the bulk restriction. It argues that bulk arose historically, not as a line of demarcation for commodities, but as a type of service. It states that if STCC is used there should be a bulk group so that a carrier may ask for a STCC class either in bulk, in containers, or in both. NTTC notes there are special insurance limits in the Act for hazardous chemicals as well as explosives and believes these too must remain excluded from descriptions like general commodities.

The Regular Common Carrier Conference, Inc., believes none of the general commodities limitations should be removed because removal would compel carriers to perform service they are not equipped to perform. It also believes we should continue allowing carriers to ask for restrictions because Section 6 of the Act says we may, not must, remove unnecessary restrictions. The only provisions it finds mandatory is the section on circuity limitation.

The Contract Carrier Conference totally supports giving contract carriers authority to serve points in the United States. It states that authorities now are too restricted to meet public needs.

The American Bus Association asks that all carriers of shipments weighing 100 pounds or less be required to seek authority in terms of the statutory language. It does not agree with the idea of countywide authority and the prohibition of equipment restrictions and restrictive amendments. The Association believes this proceeding should not apply to passenger applications.

The National Automobile Transporters Association (NATA) wants the status quo maintained for automobile carriers. It believes there should be a STCC class for automobiles with restrictions to initial or secondary movements and driveaway or truckaway service. NATA would also like general commodities and plantsite restrictions maintained. It argues overall that this proceeding is an attempt to master license and that this proceeding must be a rulemaking since there is no discretion in its application.

A variety of comments are entered by five independent associations including one traffic bureau. The Midwest Packers Traffic Association believes shippers, not carriers, should name the commodities and territories to be served. It wants to retain present descriptions and plantsite restrictions to obtain this goal.

Food Marketing Institute supports authorizing contract carriage between points in the United States as a way of getting more carriers for the food industry.

The Aluminum Association, Inc., believes the primary and fabricated metal products categories should be one, since the same carriers haul both types of goods. It also urges that categories be open-ended, that "materials and

supplies" be maintained as a description and that two-way and countywide authority be granted.

The St. Louis Regional Commerce and Growth Association wants commercial zones detailed on a county basis if countywide is the minimum territory.

Finally, the Motor Carriers Service Bureau, Inc., believes contract carrier service to all points in the United States is too broad, since there are rates and process service agent problems. It also states all carriers should be able to limit the scope of their authority by their holdings out in their tariffs.

B. Commission Practitioners.

The Motor Carrier Lawyers Association on behalf of its members enters a statement expressing the belief that there is little legal support for the policy statement and that the statement is contrary to Congress' intent. MCLA also asserts that this cannot be a policy statement because of the *ABA* decision and other precedent. It seeks dismissal of this proceeding and to have all authority issued to applicants filing after July 2, 1980, voided.

MCLA further argues that the proposal ignores applicants' burden of making a prima facie case and the common carrier obligation. It believe the modifications proffered are unfounded for this reason. It, however, indicates that a proceeding less broad in scope that builds on existing precedent would be acceptable.

Remarks from individual practitioners are in the same vein as those from the MCLA. William J. Monheim agrees with MCLA that this proceeding goes beyond Congress' intent. He believes the STCC code is impractical, and that countywide authority for common carriers and points in the United States for contract carriers and owner operators is too broad. Furthermore, the removal of most restrictions, especially those on general commodities grants, is beyond the realm of the new Act.

James C. Hardman feels that this is an attempt to master license. He finds fault with not allowing carriers and shippers to shape their own grants and with removal of any restrictions beyond those found to be unreasonable.

Francis E. Barrett argues that countywide and statewide grants are beyond actual need shown and should not be given.

The law firm of Nelson and Harding also is against the STCC code. They believe the overbroad categories subvert the intent to help new carriers into the market by increasing the number of protests to be received. Even if a STCC code is used, they believe there should be a separate code for drugs and alcohol. They also would like an index to the code. Among the items they wish to see maintained are general commodities with exceptions, materials restrictions, commercial zones over countywide descriptions, and plantsite restrictions.

Michael S. Varda believes the classifications made in Ex Parte No. MC-135, *Master Certificates and Permits,* would better serve the industry than the STCC code. He sees lack of proper equipment as a problem with giving someone STCC code authority. He also believes commercial zones larger than counties should be maintained and that contract carriers should be allowed to specify less territory to prevent insurance and process agent problems. Mr. Varda also wishes to keep restrictive amendments to aid in obtaining authority.

John W. Frame sees commodity description problems with the STCC code, but likes countywide authority as a way to deal with urban flight. He sees difficulties in granting two-way authority and wants us to rule that government traffic can move in the same vehicle as one carrying shipments weighing less than 100 pounds.

Thomas J. O'Loughin, Jr. wants us to retain STCC groups 44, 45 and 46. He states his clients deal in shipper association traffic only, the traffic described by 45, and do not want to obtain general commodities authority.

Lastly, Kermit N. McManus asks us to do an environmental statement in this proceeding.

C. Individual Carriers.

Comments from individual carriers tend to discuss both how the decision affects their operation individually and how it affects the industry overall.

American Farm Lines, Inc., believes that expedited processing of its petition to remove government traffic restrictions from its authority will let it meet the goals set forth in this proceeding to encourage competition.

C. B. Johnson, Inc., states that metallic ores is an incomplete description. A complete description would be one that allows carriers to transport ores and concentrates.

American Auto Shippers asks that decisions filed prior to the Act not be considered under the Act. It also believes there should be liberal backhaul and service extension policies.

C. W. Transport, Inc., wants all tacking restrictions removed. It now tacks irregular- to regular-route authorities in a circuitous manner and wants the ability to perform its operation more directly

Interstate Motor Freight System believes our language about owner-operators hauling food and other edible products in an amount equal to the amount of exempt products is a misinterpretation.

Miller Transfer and Rigging Co. wants a size and weight group in the STCC and wants size and weight excluded from general commodities. It believes STCC groups are too broad and will be giving carriers more authority than they want or need.

Kenosha Auto Transport Corp., and Dallas and Mavis Forwarding Co., Inc., believe transportation equipment as a description is not as good as the automobile descriptions now in use. They believe STCC overall is not good for motor carriers and would like to have field of service descriptions by expansion of *Descriptions in Motor Carrier Certificates,* 61 M.C.C. 209 (1952).

CRST, Inc., notes that tacking of irregular-route authority shall be prohibited. It argues that rather than prohibit this tacking, we should have a rule of construction allowing carriers to go directly without passing through the gateway. This will help save energy and let irregular-route carriers compete more with regular-route carriers. CRST otherwise supports this proceeding.

Sea-Land Service, Inc., and Sea-Land Freight Service, Inc., believe we should continue to exclude points in Alaska from grants of authority, citing the unique Alaskan problems of no return loads, severe weather, sparse population, the fact many locations can only be served by water, higher costs and use of so much fuel.

The Maxwell Company believes most of our proposals are sound not believes we should have a bulk group. This can be further refined to dump vehicles and tank vehicles, according to Maxwell. It also believes we should keep the bulk restriction to prevent protests and problems with hazardous materials. Finally, Maxwell states that we should continue to use commercial zones instead to counties because this will simplify descriptions.

Home Transportation Company, Inc., a heavy hauler, believes the proceeding is biased in favor of general commodities carriers, especially by removal of the restrictions. It believes we must in fairness issue authority as broad as the new general commodities authority to heavy haulers

Global Van Lines, Inc., Imperial Van Lines, Inc., and Wheaton Van Line, Inc., household goods movers, believe that the three household goods descriptions now used should be maintained. They state that household goods as defined

by the Commission, used household goods in containers, and *Kingpak* authority [*Kingpak, Inc., Investigation of Operations,* 103 M.C.C. 318 (1966)] delineate different services so there is no reason to combine them.

Steere Tank Lines, Inc., a bulk carrier, believes the Act put the *Pan American* criteria into law. It wishes that we strictly enforce STCC or forego using it for no one will pay attention to it if it is mandatory. Steere would like to seek STCC expanded to include field of service authorizations such as commodities in bulk. It also wants the bulk restriction retained to prevent needless protests and supports countywide authorizations when there is proof. Steere calls for us to renotice this proceeding with the refinements mentioned.

W. S. Hatch Company, another bulk carrier, believes that this policy statement is a flawed rulemaking. It believes that STCC is not adaptable to trucks and that it should include a bulk category if used, Hatch wants a bulk restriction maintained as there are many hazardous bulk materials that are as dangerous as Classes A & B explosives.

Central Freight Lines, Inc., and 11 other carriers express the view that this should be a rulemaking, not a policy statement. It is seen as an attempt to master license. Also, they believe there is no authority in the Act to do anything except remove restrictions on existing authority. Specifically, they believe that the *Descriptions* case with amendments is better than the STCC code, that countywide authority and nationwide contract authority are too broad and that proven restrictions should be maintained.

Alvan Motor Freight, Inc., and twenty-three other concerns adopt the position taken by the Motor Carrier Lawyers Association in their comments. They further state that changes in existing authority should be made prior to institution of any changes in new authority.

Keep on Trucking Company, Inc., Steel Transporters of California, Ditto Freight Lines, and Interstate Distributor Company believe use of the STCC code is ludicrous; the better solution is to give all carriers general commodities authority between points in the United States. These carriers also believe our territorial ideas are too broad. They believe contract carriers do not need authority to Alaska and Hawaii and that larger authority will cause problems in complying with state requirements. These carriers also see a problem with redefining commercial zones if countywide authority is used.

Overnite Transportation Company favors the STCC code. It believes that any commodity not included can become included by applicant petition. It also argues that the *Descriptions* case should be automatically combined into the code. Overnite finds nothing wrong with elimination of general commodities exceptions since carriers will not provide services for which they are not equipped. It finds the hazardous materials class unnecessary and states that the Federal Register notice on tacking and interlining should be changed to conform to the Act.

Cooper Motor Lines, Inc., states that this proceeding is an attempt to master license and calls for it to be converted into a rulemaking.

Frozen Food Express, Inc., wants grants of authority limited to specific shipper intent. It argues that existing descriptions more adequately describe the service to be rendered than the STCC code.

Daily Express, Inc., a heavy hauler, recognizes Congress' intent of reasonable broad authority but believes we are allowing master licensing. It believes it must be authorized authority which is the *quid pro quo* of what general commodities carriers will receive. Daily asks that the *Descriptions* case be revised instead of using the STCC code. It believes we must promptly determine this matter, for people are already asking for authority.

North American Van Lines, Inc., contends that the STCC is inadequate. It proposes instead a modification of the Standard Industrial Classification of the Department of Commerce which groups by industry, not by commodity. Carriers would be granted authority to transport such commodities as are dealt in or used by one of 51 different categories. This, according to NAVL, will prevent constant administrative determinations of whether specific commodities are within certain groups.

Anderson Trucking Service, Inc., feels that this proceeding goes beyond the intent of Congress to have reasonable authorities. It also finds the proceeding defective in practical terms because it contains no field of service doctrine and grants unrealistic territories.

Matlack, Inc., a bulk carrier, seeks retention of bulk restrictions. It does not believe its attitude is protectionist but a natural division of the industry. It states that general commodities carriers do not own the proper equipment or cleaning facilities for bulk equipment. Matlack wants us to recognize six groupings of service and to build commodity descriptions from them. They are general commodities, bulk, special equipment, unusual value, class A & B explosives, and household goods. It believes such a scheme will maintain the common carrier obligation.

Alamo Express, Inc., and five other carriers argue that we cannot call this a policy statement because of its contents. They believe we are trying to grant more than what is shown for public need, that there will be needless protests, and that violations of the common carrier obligation will arise because of STCC. These carriers want heavy-hauler service preserved as a class. They find all territorial proposals too broad and that all restrictions cannot be eliminated. The six carriers seek energy and environment impact statements.

Brannan Systems, Inc., and seven other carriers argue that the Act specifies authority only to the public need shown in each application. They argue that commodity descriptions should be framed on a case-by-case basis, that two-way authority should be granted only when supported by evidence, and that restrictions, including plantsite and intermediate point restrictions, are necessary. These carriers see our job as one of balancing interests under the criteria of the Act.

Arrow Truck Lines, Inc., and 15 other concerns are opposed to STCC for the problems it causes with broad grants of authority. They believe we should begin with the *Descriptions* case to build new authorities. These carriers also feel two-way and countywide grants and nationwide contract carrier authority are beyond the scope of evidence presented. Other items they wish retained are plantsite restrictions where there is only one supporting shipper and special service exceptions.

In a supplemental pleading, the aforementioned carriers reiterate their claim that communities, not counties, are the proper areas of service since counties are not intergral economic units.

A group of 12 carriers and their law firm, Grefe and Sidney, also oppose STCC as too broad and not representative. However, they believe that shippers and carriers should determine the authority granted. They believe two-way and countywide grants will be too broad except for two-way regular routes. They are against all intermediate points being served because they feel this will lead to circuitous, energy-wasting routes. They assert that nationwide contract carrier authority is too broad, presents problems of state regulation compliance, and is against Congressional intent. They wish to retain plantsite and tacking restrictions, stop interlining in cases filed after July 3, 1980, and eliminate equipment restrictions.

Finally, they wish to have restrictive amendments to conform to the proof offered.

Celeryvale Transport, Inc., and eight other carriers believe the new Act constricts our powers to act and does not grant us authority to shape grants as we propose. They would like to see descriptions phrased in terms of such commodities as are dealt in or used by. General commodities with exceptions should be maintained, and no countywide descriptions should be used. They believe elimination of restrictions will violate the common carrier duty as carriers will simply sell their services to the highest bidder.

D. Government Agencies.

Government agencies participating in this proceeding are the Departments of Justice and Defense and the Government Services Administration. The Department of Justice believes that we have enacted Congress' intent in this proceeding. It finds the STCC code to be productive and urges us to discontinue regular-route authority.

The Department of Defense believes all fitness only grants to carriers hauling traffic for the United States Government should use the terms in *Transportation of Government Traffic,* 131 M.C.C. 835 (1980). It also wants household goods carriers to be limited to statewide authority as a minimum except for pack-and-crate operators which do not serve a broad territory. The Department wishes there to be a narrow definition of hazardous materials and would like to see a STCC for secret and sensitive shipments.

The General Services Administration believes that there is an inconsistency between this proceeding and Ex Parte 55 (Sub-No. 43), *Rules Governing Applications for Operating Authority,* because of a lack of definitions as to what are household goods and hazardous materials. A definition is needed to determine what traffic falls within government traffic fitness only applications. GSA urges that only first proviso household goods traffic be found to be outside of the fitness only criteria as second and third proviso household goods traffic is routinely shipped like general commodities. It also seeks to have hazardous materials defined as they were in *Transportation of Government Traffic, supra.*

E. Miscellaneous Groups.

The International Brotherhood of Teamsters, Chauffeurs, Warehousemen and Helpers of America believes that the common carrier obligation must be emphasized in making grants of authority. It believes that grants should not be beyond the scope of the evidence and applicants' ability to serve. In conjunction with this point, the Union states that contract carriers do not need nationwide authority and countywide origins and destinations are too broad.

Kraft, Inc., states that its commodities fall under numerous STCC codes and that using STCC codes would increase paperwork in the applications it supports. It urges us to maintain "such commodities as are dealt in by food business houses" as a description. It believes this will help with backhauls for carriers. Kraft likes removal of all restrictions and believes statewide territory is more appropriate then countywide. For contract carriers, it wishes to see descriptions of "property for Kraft, Inc."

[FR Doc. 80-40447 Filed 12-30-80; 8:45 am]
BILLING CODE 7035-01-M

federal register

Wednesday
December 31, 1980

Part VI

Department of Health and Human Services

Office of Human Development Services
and
Health Care Financing Administration

Foster Care

DEPARTMENT OF HEALTH AND HUMAN SERVICES

Office of Human Development Services

45 CFR Part 1357

Requirements Applicable to Title IV-B

AGENCY: Office of Human Development Services (OHDS), HHS.

ACTION: Interim Final Rule.

SUMMARY: The Office of Human Development Services is issuing a regulation which describes the systems and programs that the Secretary will find satisfactory as meeting the requirements of Section 427 of the Social Security Act (the Act).

The Adoption Assistance and Child Welfare Act of 1980 (P.L. 96-272) amended the Social Security Act. The amended Act requires that in order to be eligible—

(1) for title IV-B funds in excess of its proportionate share of $141 million (Sec. 427(a)), or

(2) to transfer unused title IV-A or IV-E foster care funds to title IV-B for use in the provision of child welfare services in an amount which, together with the States IV-B allotment would exceed its share of $141 million (474(c)(4)(A)), a State must meet the following conditions of Section 427(a):

1. *An inventory* of all children who have been in foster care in the State for 6 months or more including certain determinations as to the appropriate placement of the child.

2. Implementation and operation of—

A. A *Statewide information system* for children in foster care.

B. a *case review system* for children in foster care.

C. a service program designed to reunify families or achieve other permanent placement.

The Act further provides that in addition to the systems and programs described above for Section 427(a) of the Act, a State must also implement and operate a program of preplacement preventive services designed to help children remain with their families (Sec. 427[b][3]) in order to—

1. avoid reduction of its funds to the Fiscal Year 1979 level, if title IV-B appropriations reach $266 million for 2 consecutive years (427(b)); or

2. receive federal financial participation under titles IV-A or IV-E for foster care maintenance payments made on behalf of children placed pursuant to a voluntary placement agreement (Section 102, Pub. L. 96-262); or

3. transfer unused title IV-E foster care funds to title IV-B for use in the provision of child welfare services, when appropriations under title IV-B have equaled or exceed $266 million for two consecutive years (Section 474(c)(4)(B)); or when the State has claimed reimbursement under IV-B in a sum equal to or exceeding its share of $266 million for two consecutive years (Section 474(c)(4)(C)).

These provisions are also being published as part of the proposed rule for Pub. L. 96-272 so that the reader will not have to refer to the Interim Final Regulation when reviewing the NPRM. This regulation is the same provision published as Section 1357.30 in the NPRM, with one exception. The requirement for a case review system appears in Section 1356.40(d) of the NPRM and is added as an additional paragraph in this regulation, Section 1357.30(d). A complete discussion of these provisions is contained in the Supplemental Information to the proposed rule governing Pub. L. 96-272, 45 CFR Parts 1355, 1356, and 1357. The proposed rule is published concurrently with this interim final rule.

DATES: This regulation is effective December 31, 1980. We will accept written comments on this regulation through March 16, 1981. See "Supplementary Information" for dates of public meetings.

ADDRESS: Comments must be in writing and sent to: Frank Ferro, P.O. Box 1182, Washington, D.C. 20013. See "Supplementary Information" for addresses of public meetings.

FOR FURTHER INFORMATION CONTACT: Frank Ferro, Associate Chief, Children's Bureau, (292) 755-7418.

SUPPLEMENTARY INFORMATION: *Public Meetings.* Public meetings on this proposed rulemaking will be held on the dates and at the locations listed below. For further information, contact the appropriate Regional Office of the Agency for Children, Youth and Families.

January 9, Federal Reserve Bank Building Auditorium, 600 Atlantic Avenue, Boston, Massachusetts 02210, Contact: Tina Janey Burell, (617) 223-6450.

January 9, Richard B. Russell Building, 75 Spring Street, N.W., Atlanta, Georgia 39323, Contact: James K. Vaughn, (404) 221-2300.

January 12, Federal Building, Rooms 13029 and 15018, 450 Golden Gate Avenue, San Francisco, California 94102, Contact: Beverly Wood, (415) 556-6153.

January 13, American Dental Society Building, 211 E. Chicago Avenue, Chicago, Illinois 60606, Contact: Forrest Lewis, (312) 353-1784.

January 14, Dallas Public Library, Room: Auditorium, 1954 Commerce Street, Dallas, Texas 75202, Contact: Patricia Newlin, (214) 767-6596.

January 16, Federal Building, Room 140, 601 E. 12th Street, Kansas City, Missouri 64106, Contact: Richard Schrader, (816) 374-5401.

January 19, The Regency Inn, 3900 Elati Street, House of Common, Denver, Colorado 90204, Contact: Sue Dignum, (303) 837-3106.

January 23, William J. Green, Federal Building, 600 Arch Street, Philadelphia, Pennsylvania 19101, Contact: Donald Barrow, (215) 596-0390.

January 28, World Trade Center Building, Room 4430, 2 World Trade Center, New York, New York, Contact: Caroline Gionta, (212) 264-4118.

January 29, New Federal Building, 915 Second Avenue, Seattle, Washington 98101, Contact: Jeanne Craig, (206) 442-0838.

The Department finds that it is impracticable and contrary to the public interest to follow notice and comment rulemaking procedures for this regulation and that good cause exists to publish this portion of the regulations as an interim final. This provision is being published as an interim final rule because the Department recognizes that States must be notified of the standards the Secretary will apply in determining whether the requirements of Section 427 of the Act have been met. It is particularly important that States be notified of these standards since States meeting these standards are eligible now to receive federal financial participation in the cost of voluntary placements. States also must be notified of these standards so that appropriate planning activities may occur to qualify States for the additional funds under Section 427(a) of the Act. Issuance of this regulation as interim final will also allow States to make application for one or more of the above options to be effective as early as the first quarter of FY 81 rather than waiting until the final regulation is issued.

Notwithstanding the omission of notice and comment procedures, comments will be accepted for a seventy-five (75) day comment period. The Department will carefully review all comments received during this period before publishing the final rule.

Legislative Authority

The President signed the Adoption Assistance and Child Welfare Act of 1980 (Pub. L. 96-272) into law on June 17,

1980. These Amendments made some changes in title IV–B of the Act which provides States with child welfare services funds and create a new title >IV–E to provide reimbursement to States for foster care maintenance and adoption assistance for eligible children.

Regulatory Analysis

Based upon the conditions established in Executive Order 12044 and the Secretary's implementing instructions, a threshold study has determined that a full regulatory analysis is not required of this significant regulation.

(Catalog of Federal Domestic Assistance Program No. 13.645 Child Welfare Services—State Grants)

Dated: December 22, 1980.

Cesar A. Perales,

Assistant Secretary for Human Development Services.

Approved: December 23, 1980.

Patricia Roberts Harris,

Secretary of Health and Human Services.

45 CFR is amended by adding a new Part 1357 to contain requirements applicable to Title IV–B of the Social Security Act.

PART 1357—REQUIREMENTS APPLICABLE TO TITLE IV–B

§ 1357.30 Requirements for state eligibility for additional payments.

(a) For any fiscal year after FY 1979 in which a sum in excess of $141,000,000 is appropriated under Section 420 of the Act, a State shall not be eligible for payment of an amount greater than the amount for which it would be eligible if the appropriation were equal to $141,000,000 unless the following conditions have been met—

(1) The State has conducted an inventory of all childen who have been in foster care under the responsibility of the State for a period of six months or more preceding the inventory as described in paragraph (a)(3) of this section.

(2) The State has implemented and is operating—

(i) A Statewide information system as described in paragraph (a)(4) of this section;

(ii) A case review system as described in paragraph (d) of this section for all children receiving foster care under the supervision of the State; and

(iii) A program of services designed to reunify children with their parents or families or to provide alternative permanent placements through adoption or legal guardianship as described in paragraph (a)(5) of this section.

(3) *Inventory.*

The inventory shall be a listing of all children who have been in foster care for six months or more, by case number, date of birth, date of initial and current placement, and date of last administrative or judicial review, and for each child listed in the inventory the State agency shall determine—

(i) The appropriateness of and necessity for the current foster care placement;

(ii) Whether the child can or should be returned to his parents or freed for adoption; and

(iii) The services necessary to facilitate either return to the parents, placement for adoption or legal guardianship for the child.

(iv) In making the determinations required in this paragraph the State agency may use information from a case review conducted within the preceding six months, or the determinations may be made at the time of the child's next scheduled case review or earlier, at the option of the State. If the determinations are made independently from the case review, the State agency shall follow the procedures required in paragraph (d) of this section, (Case Review System), to determine—

(A) The appropriateness and necessity of the current foster care placement;

(B) Whether to focus on reunification or adoption; and

(C) The services necessary to attain the placement goals.

(v) The State shall submit to the Secretary (in a form and manner to be prescribed) a report of the data gathered and the manner in which the inventory was conducted. The report shall be submitted no later than seven (7) months after the start of the inventory and shall include—

(A) The total number of children in foster care at the time of the inventory by age, legal status, race, and sex;

(B) The number of children in foster care six months or more at the time of the inventory, by case plan goal, age, race, and sex. Case plan goals to be used in the report shall be returned to own home; place for adoption; place with legal guardian(s); independent living; other permanent placement; long term foster care; and other (specify).

(C) The number of children who are free for adoption and the approximate number thought to be eligible for adoption assistance under title IV–E.

(4) *Information System.*

The State agency shall establish a permanent Statewide information system. The system shall make it possible: to determine the locations of all children who have been in foster care during the preceding twelve months; to help ensure progress in moving children into permanent status wherever possible, through return home or through adoption; to document preplacement preventive services; to support proper case management; to provide a source of data for the reporting, monitoring, evaluation and inventory requirements of the Act; and to provide the State and Federal government with information for planning, policy development, technical assistance and budgeting.

(i) The statewide information system shall be capable of providing data from which the legal status, demographic characteristics, location and goals for placement of every child currently receiving foster care services or who has been in foster care within the preceding twelve months, may readily be determined.

(ii) The information system shall, at a minimum, meet the following criteria—

(A) Provide individual and aggregate data on all children receiving services for each political subdivision of the state;

(B) Provide for the use of uniform definitions as the Secretary may require;

(C) Provide for aggregation of data for the State consistent with dates, format and procedures as the Secretary may require; and

(D) Provide for access to the case record for each child which will facilitate tracking and case management. The data record shall include—

(*1*) A unique identifier

(*2*) Child and family information (identification of child and family: name, ID number, address, and demographics including special needs;

(*3*) Date case opened (new or reopened);

(*4*) Legal/custody status;

(*5*) Eligibility status (IV–A, IV–B, IV–E, SSI);

(*6*) Living arrangement;

(*7*) Placement history for voluntary and involuntary placement beginning with the date of the current continuous placement including (as appropriate), reasons for removal from home; type of adoptive home (relatives, foster parents, other); adoption subsidy status; date freed for adoption and awaiting placement;

(*8*) Case plan goals;

(*9*) Time tables;

(*10*) Frequency of parental contact with the child and agency over the previous six months;

(*11*) Services provided;

(*12*) Source of services provided (public/private agency, direct or purchased);

(*13*) Dates when reviews and dispositional hearings are due and held; outcomes;

(*14*) Date of revocation of voluntary placement;

(*15*) Date and reason for client discharge or case closure (record retained for 12 months); and

(*16*) Identifier for local agency, caseworker and supervisor;

(E) Assure compliance with Part 95, Subpart F of title (HHS approval of systems procurements in excess of $100,000 for which Federal financial participation is requested); and

(F) Assure protection of government rights to systems developed with Federal financial participation, as described in 45 CFR 74.145, Nonrevocable, royalty-free license.

(iii) The requirements under paragraph (a)(4)(ii) of this section shall be applicable to all children in foster care on October 1, 1980, or the date upon which the State desires to be found eligible for funds.

(iv) The case-specific information described in paragraph (a)(4)(ii)(D) of this section shall be maintained in a manner which will facilitate State annual reporting on title IV-E eligible children in placement under voluntary agreement beginning in FY 81. This report shall be submitted to the ACYF on the last day of November each year.

(v) States shall report and cooperate with studies [as prescribed by the Secretary] on children served in foster care or while remaining at home and on services provided to their parents. Forms and instructions will be furnished to the States after OMB approval.

(vi) To meet Federal reporting requirements, States shall provide information as the Secretary specifies.

(5) *Services Designed to Reunify Families or Achieve Other Permanent Placements.*

(i) The program of services designed to help children return to their homes shall include—

(A) A core of reunification services which shall include day care services, homemaker or caretaker services, and family or individual counseling for parent(s) and child;

(B) Other services which the State agency identifies as necessary and appropriate to facilitate reunification of children and families may be provided, such as respite care; parent education; self-help groups; provision of, or arrangements for, mental health, alcohol and drug abuse counseling, and vocational counseling or rehabilitation.

(C) Written guidelines which stress the value of worker involvement with the family of the child early in the placement and the importance of maintaining and strengthening parent-child relationships through frequent and regular visits. The guidelines shall contain principles, policies and procedures which workers must follow—

(*1*) In determining the appropriate reunification services for each family's situation;

(*2*) In providing (for at least three months) post-placement supportive services; and

(*3*) In determining that a child cannot be returned home.

(ii) The program of services designed to facilitate adoption or legal guardianship shall include—

(A) Legal services to free children for permanent placement, including voluntary relinquishment, termination of parental rights, or activites required by the State to establish legal guardianship;

(B) Adoptive services, including recruitment and preparation of adoptive families, registration with adoption exchanges; identification of current foster families as appropriate adoptive parents for children in their care, counseling, and follow-up services to support the placement;

(C) Other activities identified by the agency as necessary and appropriate for permanent placement, such as training families to care for special needs children; training workers to meet legal requirements for court actions; post-adoption services, including parent support groups and other self-help groups; and

(D) Written guidelines which contain principles, policies and procedures which workers shall follow—

(*1*) In determining the most appropriate paln for the child who cannot return to his or her family, giving first consideration to adoption, followed by alternatives such as legal guardianship, or long-term foster care in exceptional circumstances; and

(*2*) In determining the appropriate procedures for placement, including preparation for placement, follow-up, and support services as needed for parents, legal guardians, foster parents, and children.

(iii) For each child under the care of the State, the case plan as required in paragraph (d) of this section, Case Review System, shall include—

(1) Goals for reunification with families, or a discussion of factors considered in a determination that the child cannot be returned home and goals for alternative permanent placement; and

(2) Documentation of the caseworker's actions in application of the principles, policies, and procedures set forth in the State's guidelines as required in sub-paragraph (a)(6)(i)(C) or (a)(6)(ii)(C) as appropriate.

(iv) A description of the program of services to reunify families to achieve other permanent placement shall be submitted to the RPD for review and approval.

(6) Determinations as to whether a State agency has met the requirements of paragraph (a) of this section shall be based upon the reports submitted and on-site surveys of implementation and shall be made prior to award of additional payments.

(b) If, for any two consecutive fiscal years after Fiscal Year 1979, there is appropriated under Section 420 of the Act a sum equal to or greater than $266,000,000, a State's allotment amount for any fiscal year after those two consecutive fiscal years shall be reduced to an amount equal to its allotment amount for Fiscal Year 1979 unless the following conditions have been met—

(1) The State agency has completed an inventory of children in foster care and determination of the appropriateness of placement and the report of the type specified in paragraphs (a), (3), and (4) of this section;

(2) The State agency has implemented and is operating—

(i) A statewide information system as described in paragraph (a)(4) of this section;

(ii) A case review system as described in paragraph (d) of this section for all children receiving foster care under the supervision of the State; and

(iii) A program of services designed to reunify children with their parents or families or to provide alternative permanent placements through adoption or legal guardianship as described in paragraph (a)(5) of this section.

(3) The State agency has implemented and is operating a program of pre-placement preventive services, policies and procedures designed to help children remain with their families.

The State agency's program of pre-placement preventive services shall include—

(i) Twenty-four hour emergency caretaker and homemaker services, day care, crisis counseling, individual and family counseling, emergency shelters, procedures and arrangements for access to available emergency financial assistance; and arrangements for the provision of temporary child care to provide respite to the family for a brief period, as part of a plan for preventing foster care placement.

(ii) Other services which the agency identified as necessary and appropriate, such as home-based family services; self-help groups; provision of, or

arrangements for, mental health, drug and alcohol abuse counseling, and vocational counseling or vocational rehabilitation;

(iii) Written guidelines which workers shall use for assessing the feasibility and appropriateness of services to support and improve family functioning or for determining when a child should be removed from a home and which specify the factors to be considered in making such a decision, including who within the agency shall be involved in the decision.

(iv) Written guidelines which specify the circumstances in which prior efforts to prevent placement would not be required, including situations when—

(A) The circumstances in the home present a substantial risk of harm to the child's welfare; or

(B) Preventive services have been offered but were refused by the family.

(4) For each child under the care of the State, there shall be documentation in the case plan of caseworker efforts to prevent placement through the application of the principles, policies and procedures set forth in the State's guidelines as specified in paragraph (b)(3)(iii) and a statement as to why such efforts failed to prevent the child's removal or why these efforts were not required.

(5) A description of the program of pre-placement preventive services shall be submitted to the RPD for review and approval.

(6) Determination as to whether a State agency has met the conditions of paragraph (b) of this section shall be based upon the reports submitted and on-site surveys of implementation.

(c) Amount expended by the State for the purposes of complying with the requirements of paragraphs (a) and (b) of this section shall be conclusively presumed to have been expended for child welfare services.

(d) *Case Review System.* The State agency shall develop and implement a case review system that shall ensure, for each child receiving foster care maintenance payments under the State title IV–E plan; a case plan, periodic review of the child's status, and procedural safeguards regarding the rights of the child and the parent(s).

(1) *Definition of Terms.*

(i) *Appropriate Notice to the Child* means written notice or person-to-person discussion that takes into account the child's ability to understand what is being conveyed without raising excessive anxiety or fear.

(ii) *Child of Appropriate Age* means that the child is able to understand the circumstances and implications of the situation in which he or she is involved and is able to participate in the decision or process without excessive anxiety or fear.

(iii) *Close Proximity to Parent(s) Home* means a placement nearest the home community or residence of the child's parent(s) or legal guardian(s) that is consistent with the child's best interest and special needs. Factors to be considered include ease with which the child, his or her parent(s) and family may visit each other and the availability of services the child may require.

(iv) *Determining the Continuing Necessity and Appropriateness of Placement* means an assessment of the conditions in the child's own home to determine whether the child should return home. If the review of the home indicates that continued foster care is required, the assessment shall also include a determination of whether the placement and the services provided are appropriate to the child's needs and whether the service goals in the case plan are still appropriate.

(v) *Placement in the Least Restrictive Setting* means the most family-like setting that can provide the environment and services needed to serve the child's best interests and special needs. In order of consideration, this means placement with relative(s), tribal member(s), foster family care, group home care and institutional care.

(2) *Case Plan.*

(i) The State agency shall develop written policies and appropriate procedures to be in effect throughout the State which will assure that children will be placed in the least restrictive setting available and in close proximity to the parent(s)' or family home, consistent with the best interests and special needs of the child. The State agency shall develop a Statewide procedure for approving out-of-State placements or placements beyond a specified distance from the child's home.

(ii) The case plan shall be a separate, identifiable written document which includes for each child a relevant history and diagnostic assessment, sets goals, and describes significant transactions involving the child, including, after October 1, 1983, the preventive services which were offered or provided prior to placement.

(iii) The case plan shall be developed within a 30 day period, starting at the time the agency assumes responsibility for providing services or placing the child, and shall include at a minimum—

(A) After October 1, 1983, a description of the services offered or provided which were intended to help the child remain with his family;

(B) A description of the type of home or institution in which the child is to be placed;

(C) A justification of appropriateness of placement that discusses the child's best interests and any special needs, and whether the placement is in the least restrictive setting available and in the closest proximity to the parent(s)' home;

(D) A statement of all requirements of the court at the time of judicial determination or recommendations of the administrative review panel and a discussion of how the agency responsible for the child's care will meet the requirements and recommendations;

(E) An analysis of the circumstances that necessitated the placement and the improvements required for the child's return to his or her home;

(F) A statement of the goals, developed in consultation with the child and his or her family, to be achieved during the period of placement, a description of the services to be provided to the child, the child's parent(s) and family, and a discussion of the appropriateness of these services in meeting the goals and the child's special needs, if any;

(G) A statement of the agency's plan for assuring that the child receives proper care while in the foster home or institution including services to the foster parent(s) to facilitate and support the child's adjustment, and that services are provided to the parent(s) and child in order to improve the conditions in the parent(s)' home;

(H) An estimated date by which a decision will be made to return the child to his or her parent(s) or family, or to seek an alternative permanent placement including adoption;

(I) A description of the extent to which the child, if or appropriate age, the parent(s) or other relatives participated in the development of the case plan;

(J) Where long term foster care is determined to be the plan for the child's future, the responsible agency shall include a statement in the case plan of the special needs or circumstances that would not allow the child to be returned home or placed for adoption, and shall specify the efforts that were made to place the child with parent(s) or other family or in adoption;

(K) All parties to the development of the case plan, including the child, his/her parent(s) or other relative(s), shall receive a copy of the plan, which will include, whenever possible, signature(s) indicating that they have read and understood the plan;

(L) The case record shall contain a continuing, updated notation of the

results of each court and administrative action or review affecting the child, and significant agency actions, services, or encounters relative to the case plan for the child, parent(s) and family, and the foster family.

(3) *Periodic Review.*

The case review system shall provide for a review of the status of each child no less frequently than once every six months by a court, or by an administrative review. The periodic review shall include—

(i) A determination of the continuing necessity for and appropriateness of the child's placement;

(ii) A discussion of the extent to which all parties have complied with the case plan and achieved the goals described in the plan;

(iii) A summary of progress toward alleviating or mitigating the circumstances necessitating placement; and

(iv) A target date by which the child may be returned home or placed for adoption, legal guardianship or other permanent placement.

(4) *Administrative Review.*

(i) When the periodic review is an administrative review it shall be conducted by a panel of appropriate persons, at least one of whom is not a part of the direct line of supervision in the delivery of services to the child or parent(s) being reviewed. The review panel may include agency staff, staff of other agencies, officers of the court and citizens qualified by experience, professional background or training.

(ii) Members of the administrative review panel shall receive instructions which will enable them to understand the review process and their roles as participants.

(iii) The administrative review shall be open to the participation of the parent(s) and the child, if of appropriate age, and may include the foster parents. The agency shall develop methods and procedures for assuring that written notice will be sent to the child's parent(s) two weeks prior to the review, notifying them of the date and location of the review, and the rights of parent(s) and the child to be accompanied by a representative of their choice.

(iv) Following the review, a written statement of the conclusions and recommendations shall be made available to all participants in the review, subject to agency safeguards relative to the confidentiality of information.

(5) *Dispositional Hearings.*

(i) The case review system shall require a dispositional hearing for each child no later than 18 months after placement; and shall have additional dispositional hearing(s) annually thereafter, unless otherwise determined by a court of competent jurisdiction.

(ii) The dispositional hearing shall be held by a family, juvenile or other court of competent jurisdiction, including a tribal court, or by an administrative body appointed or approved by the court.

(iii) The hearing shall determine the child's future status, including whether—

(A) The child should be returned to his or her parent(s) or other family member(s);

(B) The child should be continued in foster care for a specified period;

(C) The child should be placed for adoption or legal guardianship; or

(D) The child, because of exceptional circumstances, should remain in foster care on a long term basis as a permanent plan or with a goal of independent living.

(6) *Procedural Safeguards for the Rights of Parents and Children.*

(i) Procedural safeguards shall be applied with respect to the rights of parents, families and children pertaining to—

(A) Removal of the child from the home of his or her parent(s) or other family member(s);

(B) Any change in the child's foster care placement; and

(C) Any determination affecting the visitation arrangements of the parent(s) or other family member(s).

(ii) Procedural safeguards shall include—

(A) Prior written notice of the agency's intent to petition the court to remove a child from the home of his or her parent(s) or other family member(s). Notice shall be provided two weeks in advance of the intended action and shall specify the nature of the hearing; how counsel may be obtained; the right to written findings from the hearing and how they may be obtained; and the right to appeal. The State shall have a method of verifying that the parent(s) or family received the notice.

This prior notice requirement will apply to all court proceedings with regard to neglect, dependency or termination of parental rights unless the child's health or well-being would be endangered if prior notice were given.

(B) A method of ensuring that notice of the intent to petition the court to remove the child from the home or to terminate parental rights is given in the language of the family and/or is given orally if there are indications that the parent does not read.

(C) Written notice of any intended change in placement or visitation agreement. The Notice shall be sent to the parent(s) or family two weeks in advance, with a statement advising them of their right to comment and to a review and discussion of the proposed change with a person not responsible for the case management or delivery of services to the parent(s) or child, unless the child's health or well-being is endangered by delaying the action or would be endangered if prior notice were given;

(D) Procedures which shall ensure review of the parent(s)' objection(s) and provide for a discussion of the proposed change with the parent(s); and

(E) Appropriate notice of the intended change in placement or visitation arrangement to the child, given two weeks in advance, unless the child's health or well-being is endangered by delaying the action or would be endangered if prior notice were given.

(Adoption Assistance and Child Welfare Act of 1980, Pub. L. 96-272, 42 U.S.C. 670 et seq., 94 Stat. 501, 42 U.S.C. 620, 94 Stat. 516 et seq., Section 1102 of the Social Security Act, as amended, 42 U.S.C. 1302)

[FR Doc. 80-40555 Filed 12-30-80; 8:45 am]

BILLING CODE 4110-92-M

DEPARTMENT OF HEALTH AND HUMAN SERVICES

Office of Human Development Services

45 CFR Parts 1355, 1356, and 1357

Foster Care Maintenance Assistance and Adoption Assistance; Child Welfare Services

AGENCY: Office of Human Development Services (OHDS), HHS.

ACTION: Notice of Proposed Rulemaking.

SUMMARY: The Department is proposing regulations to govern the new title IV-E program, Federal financial participation for Foster Care and Adoption Assistance, and revisions to the title IV-B program, Child Welfare Services, of the Social Security Act, contained in Pub. L. 96-272, the Adoption Assistance and Child Welfare Act of 1980.

Interim Final Regulations have also been issued to notify States of the procedures and protections that must be in place before a State can receive its share of title IV-B funds if appropriations are made in excess of $141 million. These provisions also apply to transfer of funds from title IV-E to title IV-B for use in child welfare services, and to reimbursements for the allowable costs of voluntary placements of children in foster care.

DATES: Comments must be received on or before March 16, 1981. Comments on the proposed rule for fiscal requirements including allotments, the transfer of funds and administrative and training expenditures under title IV-E (Sec. 1356.80) must be received on or before January 30, 1981.

ADDRESS: Send written comments to: Frank Ferro. P O. Box 1182, Washington, D.C. 20013

FOR FURTHER INFORMATION CONTACT: Frank Ferro, Associate Chief, Children's Bureau, (202) 755-7418.

SUPPLEMENTARY INFORMATION: Public Meetings

Public meetings on this proposed rulemaking will be held on the dates and at the locations listed below. For further information contact the Regional Program Director in the appropriate Regional Office of the Administration for Children, Youth and Families.

January 9: Federal Reserve Bank Building Auditorium, 600 Atlantic Avenue, Boston, Massachusetts 02210, Contact: Tina Janey Burell, (617) 223-6450.

January 9: Richard B. Russell Building, 75 Spring Street, N.W., Atlanta, Georgia 39323, Contact: James K. Vaughn, (404) 221-2300.

January 12: Federal Building, Rooms 13029 and 15018, 450 Golden Gate Avenue, San Francisco, California 94102, Contact: Beverly Wood, (415) 556-6153.

January 13: American Dental Society Building, 211 E. Chicago Avenue, Chicago, Illinois 60606, Contact: Forrest Lewis, (312) 353-1784.

January 14: Dallas Public Library, Room: Auditorium, 1954 Commerce Street, Dallas, Texas 75202, Contact: Patricia Newlin, (214) 767-6596.

January 16: Federal Building, Room 140, 601 E. 12th Street, Kansas City, Missouri 64106, Contact: Richard Schrader, (816) 374-5401.

January 19: The Regency Inn, 3900 Elati Street, House of Common, Denver, Colorado 90204, Contact: Ms. Sue Dignum, (303) 837-3106.

January 23: William J. Green Federal Building, Room 3306, 600 Arch Street, Philadelphia, Pennsylvania 19101, Contact: Donald Barrow, (215) 596-0390.

January 28: World Trade Center Building, Room 4430, 2 World Trade Center, New York, New York, Contact: Caroline Gionta, (212) 264-2405.

January 29: New Federal Building, 915 Second Avenue, Seattle, Washington 98101, Contact: Ms. Jeanne Craig, (206) 442-0838.

The Department has established a demonstration project to assist qualified applicants with certain costs of commenting on these proposed regulations. The purpose of this project is to learn whether this kind of assistance will achieve a more complete discussion of significant issues and a greater diversity of oral and written comments. This project is described in a Notice published in Part VI of the Federal Register on December 17, 1980 (45 FR 83172). Please refer to that Notice for complete information on criteria for eligibility, on reimbursable costs and on completing the application form. The following is a summary of the demonstration project.

Four of the ten meetings to be held during the comment period—Kansas City (Jan. 16), Denver (Jan. 19), Philadelphia (Jan. 23), and Seattle (Jan. 29)—have been chosen for the demonstration project as sites where selected applicants can be assisted to participate if they could not otherwise afford to do so. Applicants for the regional meeting in Kansas City must live in Iowa, Kansas, Missouri or Nebraska; applicants for the meeting in Denver must live in Colorado, Montana, North Dakota, South Dakota, Utah or Wyoming; and applicants for the meeting in Philadelphia must live in Delaware, Maryland, Pennsylvania, Virginia, West Virginia or the District of Columbia. Finally, applicants for the meeting in Seattle must live in Alaska, Idaho, Oregon or Washington State. The states listed are the states served by each of the four regional offices.

In addition, interested persons throughout the country and the territories are eligible to apply for funding to prepare written comments (such as compilations of membership surveys) or to gather informtion to back up their positions on the issues in these proposed regulations. The Department will give special consideration to applications for written comments from those regions where assistance to attend regional meetings is not available.

Applications for assistance to participate in one of the four regional meetings must be postmarked on or before the following dates: for the Kansas City meeting—December 26, 1980; for the Denver meeting—December 29, 1980; for the Philadelphia meeting—January 2, 1981; and for the Seattle meeting—January 8, 1981. Applications for assistance in preparing written comments must be postmarked on or before January 21, 1981. These deadlines have been set to allow the Department sufficient time to review applicants and notify successful applicants However, late applications will be considered to the extent possible.

An Evaluation Board will review all applications. To approve an application.

the Board must be able to decide that it meets all the following three criteria:

1. The information the applicant plans to present will help the Department decide the issues in the proposed regulations.

2. The applicant represents an interest that otherwise might not be heard.

3. The applicant cannot otherwise afford the costs of participating in a regional meeting or developing written comments.

An application must contain the information necessary to show whether these three criteria are met. It must identify the issues of concern to the applicant, his or her positions on the issues, and for whom the applicant speaks. It must also describe the applicant's financial situation.

For further information and for application forms, contact: Carel Hedlund, Demonstration Project, Department of Health and Human Services, Room 706.E, 200 Independence Avenue, S.W., Washington, D.C. 20201, Telephone: (202) 245-7545.

The Department urges everyone interested in the regulations to make their views known during the comment period by attending a regional meeting or submitting written comments, whether or not they wish to apply for assistance.

I. Background

The landmark Adoption Assistance and Child Welfare Act of 1980 (Pub. L. 96-272) was enacted on June 17, 1980. Section 101 of Pub. L. 96-272 amended title IV of the Social Security Act (the Act) and created a new part E—Federal Payments for Foster Care and Adoption Assistance (IV-E). That section provides for a phased repeal of Section 408 of the Act, which currently provides authority for Federal matching in State foster care payments under the Aid to Families with Dependent Children program (AFDC-FC). States may continue to receive Federal matching for AFDC-FC payments under Title IV, Part A of the Act (IV-A) until September 30, 1982 or, if earlier, the quarter in which the State implements an approved State plan under title IV-E.

Public Law 96-272 also amended Title IV, Part B of the Act (IV-B) to consolidate, restate and in some instances modify the existing Child Welfare Services program. The most significant modification set new conditions on the States for receipt of their share of increased appropriations intended to improve protections for children in foster care.

The new law mandates needed improvement in the States' child welfare and social service programs, strengthens and improves the program of Federal support for foster care of needy and dependent children, establishes a program of Federal Financial participation to encourage adoptions of children with special needs, and encourages support for the family.

The impetus behind the passage of Pub. L. 96-272 was the belief of Congress, and most State child welfare administrators, supported by extensive research, that the public child welfare system responsible for serving children, youth and families had become a receiving or holding system for children living away from parents rather than a system that assists parents in carrying out their roles and responsibilities and provides alternative permanent placement for children who cannot return to their own homes. Studies show that under current policies and procedures thousands of children are stranded in the public foster care system with little hope of being reunited with their families or having a permanent home through adoption or other permanency planning, thereby causing harm to the children and high costs to the States.

The passage and enactment into law of Pub. L. 96-272 (formerly HR 3434) demonstrates a Federal commitment to provide financial and technical assistance to States to make changes in their child welfare services systems. To reduce the number of children entering foster care, emphasis is placed upon the use of preplacement preventive services to help solve or alleviate the family problems that would otherwise result in the child's removal from the home. To reduce the number of children already in the foster care system, the law requires States to undertake several initiatives.

A State must enact a law by October 1, 1982, establishing annual goals for reducing the number of IV-E children remaining in foster care over 24 months. If a State is to receive Federal financial participation (FFP) in foster care maintenance payments under title IV-E after October 1, 1983, it must provide services in all political subdivisions to facilitate the reunification of foster children with their families. To ensure that children do not remain adrift in the foster care system, a State must implement case plan and case review procedures that cyclically assess the appropriateness of the child's placement and reevaluate the services provided to assist the child and the family. To encourage family reunification, a State must attempt to place a child in close proximity to the family and in the least restrictive (most family like) setting, and finally, for those children who cannot be reunited with their families and who have "special needs" as defined in the regulation, financial assistance will be available to families adopting these children. In short, the new law rests on three pillars:

Prevention of unnecessary separation of the child from the parents;

Improved Quality of Care and Services to children and their families;

Permanency through reunification with parents or through adoption or other permanency planning.

The foregoing is a brief summary of the major goals of the law. Sections II, III and IV of the Supplemental Information will discuss the more important provisions of the proposed regulation.

A. Approach to Writing the Regulation

Pub. L. 96-272 establishes a new program, the title IV-E program, which will replace the title IV-A foster care program not later than October 1, 1982. In addition, the law makes changes in the IV-B child welfare services program and it ties the two programs together with numerous program and fiscal incentives. Thus, careful attention should be given to the cross references and linkages between Parts B and E. These linkages are discussed under the specific sections to which they apply. They include funding provisions with respect to amount and timeliness of appropriations, transfer of funds, service requirements, administrative costs and training regulations.

While the goals of the law can become somewhat obscured by the complexity of the interrelationship of the IV-B and IV-E programs, numerous provisions are drafted in the law with great specificity and leave little doubt as to intent. Consequently, the Department was able to incorporate into the regulation nearly verbatim many provisions of the law.

The law gave the Department discretion in implementing other important provisions. The Department held a public meeting to discuss the issues with outside organizations and established a senior level policy group to discuss alternative policy options and make formal recommendations to the Secretary.

Inevitably in writing regulations, difficult choices must be made from alternatives representing competing values and goals. This regulation is aimed to bring about changes within a reasonable timetable and may require participating States to make fundamental changes in their child welfare systems. Ultimately, the States will be the instrument of change. Many States have already begun to make the

requisite changes. This regulation is drafted in recognition of the diversity of States and the variety of problem solving approaches extant. The Department has made every effort to be sensitive to State practice and has incorporated State recommendations in its approach and in framing the provisions of the proposed regulation. At the same time the regulation is specific enough to produce consistency in interpretation and uniformity in implementation.

The Department's purpose has been to draft a regulation designed to foster the desired changes, while allowing flexibility in the means of producing the changes required by the law. The requirements were developed after seriously weighing their consequences for children, parents, State practice, caseworkers, and others affected by the regulation.

B. Financial Impact

Cost considerations are a critical element in the regulatory decision process. Full implementation of the intent of Pub. L. 96-272 and of the proposed regulation is expected to have considerable impact on the Nation's public child welfare services system.

Cost consequences, although not solely determinative, were carefully considered in drafting the regulation provisions. For example, the Department chose to require only those preplacement preventive services and reunification services that are essential to accomplishing the goals of the legislation, rather than a more extensive list of required services which the Department concluded was too costly and would cause a financial drain from other vitally needed services. In dealing with the information and reporting requirements, cost and program considerations were combined. The information and reporting requirements in the Act have been interpreted to allow development of a Statewide information system that will meet the reporting requirements of both Pub. L. 95-266, the Adoption Opportunities Act, and of Pub. L. 96-272.

The Department believes the regulation will protect the best interests of children and families served, carry out legislative requirements, address the diverse range of capabilities existing in the States, and lead to a marked reduction of the average number of children in foster care. It is estimated that the foster care caseload will decline 5% in FY 81 compared to the average number of children in care in FY 80. Improved permanency planning practices begun in FY 81 will have their greatest impact on the average FY 82 caseload which is expected to decline a further 15% from the average number of children in care in FY 81. Continuing declines of approximately 5% per year are expected in FY 83 and FY 84 when the caseload size is expected to stabilize at approximately 360,000, or nearly 30% lower than the average number of children in care during FY 80.

If the cost maintaining children in substitute care continues to inflate at the same average rate that occurred between 1975 and 1978, cost savings per year by FY 84, due to the anticipated reduction in the number of children in out-of-home placement, would be over one billion dollars for the Nation's foster care system.

Based upon conditions established in Executive Order 12044 and the Secretary's implementing instructions, the Department has conducted a threshold study and has determined that a full regulatory analysis is not required. The Department has classified this regulation as a significant regulation under Executive Order 12044.

C. Reporting and Recordkeeping Requirements

The proposed regulation contains reporting and recordkeeping requirements. The Department is required to submit to the Office of Management and Budget, for review and approval, the following sections and/or forms pertaining to reporting and recordkeeping requirements:

—Inventory of Children in Foster Care (Sec. 1357.30(a)(3))

—Statewide Information System (Sec. 1357.30(a)(4))

—Report on Voluntary Placements (Sec. 1357.30(a)(4)(iv))

—Federal Reports on Child Welfare Services (Sec. 1357.20(c)(10))

The Department will submit these sections and forms to OMB.

The following sections and/or forms have been submitted to OMB for approval.

—IV-B Child Welfare Services State Plan Guidelines which contain an Annual Summary of Child Welfare Services and an Annual Budget Request (Section 1357.40(a)(4)) Approved by OMB for one year.

—Interim State Plan for title IV-E of the Social Security Act. The permanent IV-E State plan will be submitted following publication of the final regulations for Pub. L. 96-272.

IV-E Expenditures Reports (Section 1356.80)

IV-E Estimates of Expenditures (Section 1356.80)

D. Coordination

The Department believes that coordination of services in a time of scarce resources is vital to ensure the most appropriate and cost effective use of available resources. Pub. L. 96-272 is explicit in requiring that the title IV-E and title IV-B programs be coordinated with each other, with the title XX services program and with other Federal and State programs.

The proposed regulations facilitates coordination by mandating the common organizational location of the IV-E, IV-B and title XX programs within the single State Agency and by encouraging the development of common service programs to meet the plan requirements of title IV-E and title IV-B.

The proposed regulation also contains requirements that States assess the relevance and appropriateness of related programs and services. This assessment, along with supporting policies and procedures, must be provided to local agencies to facilitate inter-program referrals and to enable periodic assessment of the effectiveness of the State's system for coordinating services.

E. Immediate Implementation Activities

States may immediately apply for available funds under title IV-E provided they have a DHHS approved State Plan. At this time, title IV-E does not authorize the Secretary to make estimated payments in advance of State expenditures. Therefore, Federal funds will be available on a reimbursement basis only.

The Congress has passed a technical amendment to the Act to permit the making of estimated payments in advance of State expenditures. As of the date of publication of the proposed regulation, the President has not signed the technical amendment. For Fiscal Year 1981, the Department will issue an interim title IV-E State Plan preprint to be used by the States to certify they have met the necessary requirements in the law. The present interim preprint is based solely on the provisions of the Act and not on this NPRM. Federal funds will be made available for FFP to reimburse States that have an approved interim IV-E State plan. A revised IV-E State Plan preprint will be made available to the States when the final regulation is issued.

F. Contents of Federal Register *Regulation Package*

The Department is concurrently publishing several regulatory documents pertaining to the Adoption Assistance and Child Welfare Act of 1980 (Pub. L.

96–272). These documents are all published in this edition of the Federal Register. They include:

1. Notice of Proposed Rulemaking for Pub. L. 96–272. The NPRM contains new Parts 1355, 1356 and 1357 of title 45 of the Code of Federal Regulations to implement the new IV–E program, revise the IV–B regulation, and implement new provisions in the IV–B program required by the amended Act. The NPRM also includes the provisions pertaining to State eligibility for additional payments (Section 427 of Pub. L. 96–272) which are also being published as an interim final rule in this issue of the Federal Register. The current regulation for the IV–B program is commingled with that of the IV–A services program for the territories in 45 CFR Part 1392. The proposed regulation for 45 CFR Parts 1355, 1356 and 1357 which is included in this document, will replace the provisions for IV–B in Part 1392.

The fiscal requirements for title IV–E are stated in section 1356.80. Included in this section are the conditions for the Federal financial participation in State payments and administration and training expenditures, and foster care allotment limitations. A shorter comment period has been provided for this section because States may be faced with a limitation on foster care funds, therefore the basis for the allotment must be finalized. Further, the regulations governing administrative and training expenditures must be finalized in order to have cost allocation plans approved. Finally, the allotment limitations govern the possible transfer of title IV–E funds not used for foster care to title IV–B. These activities will all occur during the fiscal year, no later than halfway through the third quarter of fiscal year 1981. Also, the State legislatures must appropriate State and local funds to match the Federal funds. Advance knowledge will be needed in order for the correct amounts to be requested by the State agencies and approved by the State legislatures.

2. Notice of Proposed Rulemaking for amendments to Medicaid Provisions in 42 CFR Parts 431, 435 and 436. This regulation would amend the Medicaid Program to implement the provisions of Pub. L. 96–272 that apply to Title XIX. The proposed rule extends Medicaid eligibility to children for whom payments are made under the title IV–E Foster Care Maintenance Payments Program or the Adoption Assistance Program, and the two additional groups now eligible for IV–A foster care (children voluntarily placed in foster care and children in public institutions).

3. Interim Final Rule for Requirements for State Eligibility for Additional Payments, 45 CFR 1357.30. This regulation governs criteria that apply to several provisions in Pub. L. 96–272 whereby States may qualify to receive additional funds for child welfare services, transfer funds from Title IV–E to Title IV–B for use in child welfare services, or be partially reimbursed for costs of voluntary placement of children in foster care. These provisions are also being published as part of the proposed rule for Pub. L. 96–272 so that the reader will not have to refer to the Interim Final Rule provisions when reviewing the NPRM. Discussion of these provisions is contained in the Supplemental Information to the NPRM for Pub. L. 96–272. The Interim Final Rule contains a reproduction of the relevant sections of the NPRM requirements, but does not reiterate the discussion of these provisions set forth in the Supplemental Information section of the NPRM.

The Department finds that it is impracticable and contrary to the public interest to follow rulemaking procedures for this provision, and that good cause exists to publish this portion of the regulations as an interim final. These provisions are being published as an interim final rule because the Department recognizes that States must be notified of the standards the Secretary will apply in determining whether the requirements of Section 427(a) and (b) of the Act have been met. States meeting these requirements are immediately eligible to receive federal funds for foster care maintenance payments for voluntarily-placed children. It is also important that States be notified of these standards so that they may make appropriate plans to meet the standards and qualify for the additional funds under Section 427(a) of the Act. Notwithstanding the omission of rulemaking proceedings, public comments will be accepted for seventy-five days following publication. Based on the comment received, the Department will make appropriate changes. The changes will not be retroactive.

II. Title IV–E—Federal Payments for Foster Care Maintenance and Adoption Assistance

The law creates a new program under title IV–E (IV–E) of the Social Security Act. The IV–E program closely parallels the foster care program currently provided under title IV–A, Aid to Families with Dependent Children program. However, the IV–E program also makes available Federal financial participation (FFP) in adoption assistance payments for "special needs" children. Federal matching funds for adoption assistance payments are not available under title IV–A.

The IV–E program will eventually replace the IV–A foster care program. Beginning October 1, 1982, foster care funds will no longer be available under title IV–A. Until September 30, 1982 a State may operate its foster care programs under either title IV–E or IV–A. If a State chooses to continue under the IV–A program, the State must meet the title IV–A requirements. Although the Federal agency responsibility for the administration of the title IV–A foster care program will be transferred to the Office of Human Development Services, the essential application and financial management procedures for title IV–A will not be altered.

For purposes of summarizing the IV–E provisions of Pub. L. 96–272, the law may be divided into the following general areas: State Plan Requirements; Foster Care Maintenance Payment Program; Children Voluntarily Placed in Foster Care; and, the Adoption Assistance Program.

State Plan Requirements: The State plan requirements contained in the amended Act (Sec. 471 of the Act (include many requirements applicable to AFDC State plans under title IV–A. Title IV–E State plans are also subject to additional administrative requirements. The plan would have to be administered by the same State agency that administers the Child Welfare State Grant Program under title IV–B of the Act. An independent audit would be required, at least once every three years, of the programs under titles IV–B and IV–E (Sec. 471(a)(13) of the Act). State plans must contain provisions to restrict the use or disclosure of information concerning individuals assisted under the State plan to purposes directly connected with the administration of the plan and other Federal programs. States are required to establish by law, by October 1, 1982, for each fiscal year beginning with fiscal year 1984, goals as to the maximum number of IV–E children in the State who will remain in foster care after having been in care over 24 months (Sec. 471(a)(14) of the Act).

The amended Act (Sec. 471(a)(16) of the Act) strengthens the requirements for case plans and case reviews for children in foster care. Effective October 1, 1983, State plans must provide that reasonable efforts are made to prevent removal of the child from his or her home prior to foster care placement and that reasonable efforts are made to enable the child to return home (Sec. 471(a)(15) of the Act). Also effective October 1, 1983, the agency must show that reasonable efforts had been made

to prevent removal, in order for the child to receive title IV-E assistance payments (Sec. 472(a)(1) of the Act).

Foster Care Maintenance Payment Program: Title IV-E authorizes FFP in assistance for all children currently eligible for AFDC-FC funds under title IV-A. Under title IV-A, Federal AFDC-FC payments are funds available for maintenance payments for a child otherwise eligible for AFDC payments, who is placed in a foster home or nonprofit private child care institution. Eligibility for FFP under title IV-E includes children in public child care institutions which accommodate no more than 25 children. Children receiving foster care maintenance payments under title IV-E are deemed, for purposes of titles XIX and XX, to be dependent children as defined in title IV-A, and are, therefore, eligible for Medicaid as categorically needy and the title XX services (Sec. 472(d) of the Act).

In the past, Federal matching funds for AFDC-FC payments have been available to States on an open-ended, entitlement basis. Under Pub. L. 96-272 and under the amended title IV-A Foster Care program, there is a ceiling on foster care FFP funds for each fiscal year 1981 to 1984, if appropriation for title IV-B child welfare services equals or exceeds specified amounts: $163.55M for fiscal year 1981, $220M for fiscal year 1982, and $266M for each of fiscal years 1983 and 1984 (Sec. 474(b)(1) and (2) of the Act).

Federal funds made available to a State under its IV-E foster care allotment ceiling, which are not used for maintenance payments, may be transferred for use for child welfare services under title IV-B (at a 75 percent matching rate), under certain conditions (Sec. 474(c) of the Act). No State may increase its IV-B funds by a transfer of IV-E funds beyond certain specified amounts until it has implemented the protections required by Section 427(a) and (b) of the Act.

Under the old law, States received Federal matching for AFDC payments (including AFDC-FC payments) on the basis of either the AFDC formula (used by only four States) or the Medicaid matching formula. All FFP for foster care maintenance payments and adoption assistance payments under the title IV-E program is determined using the Medicaid matching formula (Sec. 474(a)(1) and (2) of the Act).

Children Voluntarily Placed in Foster Care: In the past, Federal AFDC matching funds were not available for children placed in foster care without a judicial determination. Section 102 of Pub. L. 96-272 temporarily amends title IV-E to authorize FFP in expenditures made after September 30, 1980 and before October 1, 1983 (and under title IV-A, expenditures made after September 30, 1979, and before October 1, 1983) for foster care maintenance payments with respect to a child removed from home under a voluntary placement agreement. FFP is available only for expenditures made on behalf of voluntarily placed children after the State has implemented the protections and procedures mandated by Section 427(b) of the Act including a program of preplacement preventive services.

Adoption Assistance Program: Pub. L. 96-272 provides for FFP in State adoption assistance payments (Sec. 473 of the Act). There was no such authority prior to Pub. L. 96-272. States participating in the title IV-E program are required to establish a program of adoption assistance payments (Sec. 471(a)(1) of the Act).

Adoption assistance payments must be made under an adoption assistance agreement to parents who adopt an eligible child after the effective date of a State's approved title IV-E State plan. With an approved State plan, adoption assistance payments will also be available for assistance payments for adoptions made on or after June 17, 1980. FFP for these payments will not be retroactive but will be available from the effective date of the Plan.

FFP for adoption assistance is available for a child with "special needs" who is eligible for SSI, AFDC, or foster care maintenance payments under title IV-E. An adoption assistance agreement is required for each child.

Children receiving adoption assistance payments under title IV-E would be considered to be receiving AFDC and therefore, eligible for Medicaid (as categorically needy) and title XX services (Sec. 473(b) of the Act).

FFP for adoption assistance payments is permanent, on an open-ended entitlement basis, and is determined based on the Medicaid matching formula (Sec. 474(a)(2) of the Act).

The following is a discussion of the significant provision of the proposed IV-E regulation.

A. Case Review System

The proposed regulation, in Section 1356.40, requires that the State agency administering or supervising the administration of the IV-E State plan implement a case review system that will apply to each child receiving foster care maintenance payments. The case review system includes a case plan (Sec. 1356.40(d)(2)), periodic review of the child's status (Sec. 1356.40(d)(3)), and procedural safeguards to protect the rights of the child and the parent (Sec. 1356.40(d)(6)).

(1) *Case Plan.*—The law as implemented by the proposed regulation (Sec. 1356.40(d)(2) requires that each child receiving foster care maintenance payments have a case plan. The proposed regulation also requires that the State agency ensure that the child's case plan address the essential elements. These elements are: the type of facility in which each child is placed; the appropriateness of the placement and how it serves the best interests, as well as any special needs, of the child; service requirements and recommendations made by the court or administrative review panel and how the agency will comply with these requirements and recommendations; an assessment of the circumstances which necessitated placement and what conditions in the child's own home need improvement before the child can be returned home, and what services will be provided to meet this objective; identification of goals to be achieved for the child while in placement, and what services will be provided to attain these goals; an estimated date when the child will be returned home or an alternative plan, including adoption will be undertaken. The plan must indicate the extent to which the child, if of appropriate age, and the parent(s) have been involved in the development of the case plan.

The elements stated above are in the law either as part of the definitions of a case plan or the case review system. In addition to being minimal requirements of a case plan, they are considered to exemplify the best professional practice and be most essential to ensure that the best interests of the child and family are continually served, and that agencies adhere to the provisions of the law which are designed to protect those best interests. Further, these elements will emphasize a close working relationship among the agency, the child and the parent(s) by involving the parent(s) in case planning. This effort should facilitate early reunification with the biological family. The continuing involvement of the parent(s) and courts further reduces the possibility of the child being "lost" in the foster care system, and will ensure that the services needed, will be provided in a timely fashion.

A written case plan is a dynamic document, changing periodically as the child's and family's situation and progress is reviewed. This regulation requires that the initial case plan covering all of the essential elements be developed within a 30-day period

starting at the time the agency assumes responsibility for providing services or placing the child. This time span permits the agency and the family to access the situation, set goals, identify needed services, and estimate a point in time when reunification is to take place or an alternative plan undertaken.

The proposed regulation also requires documentation in the case record of agency actions, services provided, and decision-making. This record will provide accountability for the child's movement within the foster care system (Sec. 1356.40(d)(2)(iii)). Essential information required by the Act draws heavily from the language found in the current regulation for AFDC-FC, 45 CFR 233.110. The recordkeeping required by the proposed regulation is similar to that required under title IV-A Foster Care; however, the proposed regulation provides more detailed guidance in the continuous updating and recording of the results of administrative actions or reviews affecting the child. Systematic and meaningful recording will contirbute to agency accountability for the best interests of the child.

(2) *Least Restrictive Placement in Close Proximity to the Parents or Family Home.*—The law as implemented by the proposed regulation requires that the case plan ensure that children in foster care be placed in the least restrictive (most family-like) setting available. In drafting the proposed regulations, the Department was particularly sensitive to the importance of keeping children in their own community and in the most family-like setting while still meeting the needs of the child (Sec. 1356.40(d)(2)(i)). The draft regulation lists the order of consideration for foster care placements, starting with family care and proceeding to group arrangements and institutional care (Sec. 1356.40(d)(2)(i)). In selecting the appropriate foster care setting for each child, agencies are required to explore the possibility of placement in the extended family of the child or with other relative(s) before exploring the resources of foster parents unknown to the child (Sec. 1356.40(d)(2)(i)). The regulation underscores the need for sensitivity and attention to the child's cultural, ethnic and racial group in the selection of the placement.

The requirement of placement in close geographical proximity to the home of the child's parent(s) reinforces the emphasis of the legislation to keep children who are in placement in close contact with their families. Research supports the conclusion that frequent visitation has a direct and positive effect in aiding the return of children to their homes. The placement must be consistent with the best interest and special needs of the child.

(3) *Periodic Review and Composition of Administrative Review Board.*—The law as implemented by the proposed regulation requires that the State agency must conduct a case review no less frequently than once every six months for each child in foster care (Sec. 1356.40(d)(3)). This review may be conducted by a court or administrative review panel (Sec. 1356.40(d)(3)).

The administrative review panel, constituted by the State agency to meet the obligation to conduct administrative reviews every six months, must include at least one person who is not responsible for direct case management or delivery of services to the family or child being reviewed (Sec. 1356.40(d)(4)(i)). The proposed regulation lists some of the possible sources for selecting this person(s) including the use of citizens qualified by experience, training or professional background (Sec. 1356.40(d)(4)(i)).

The administrative review is the point at which the principal parties to a foster care placement and in the child's life have the opportunity to discuss the case plan, progress made toward resolution of problems and achievement of goals, and to reach some understanding about the child's current and future status. It is of particular importance that the child be present and participate in the process, so that the child has immediate access to the information presented and can offer his or her own point of view, ask questions, and share in the planning for the future. Participation in this critical activity will relieve the anxiety of awaiting the decisions of others, increase the likelihood of a decision the child can understand, meets the child's unique and individual needs and allows for an experience in personal growth related to responsibility for his or her own life. Unless there are reasons of age or condition that would preclude attendance, the foster child should be a part of the administrative review.

The regulation defines "children of an appropriate age" and "appropriate notice to the child" in order to provide guidelines within which States may determine when children should be involved in the events which vitally concern them. The definitions take into account the child's ability to understand the events without excessive anxiety or emotional stress (Sec. 1356.40(d)(1) (i) and (ii)).

This assumes that caseworkers will be prepared to make a judgment about the child's ability to understand the proceedings and to participate in the process. Workers should also be able to assist and support any child in preparation for and participation in the administrative review and other activities related to planning and placement.

As stated previously, the administrative review panel must include at least one person who is not directly responsible for the case management of, or the delivery of services to the child and parent(s) who are subjects of the review (Sec. 1356.40(d)(4)(i)). This individual, who is outside of the direct line of supervision may not be the worker, that worker's supervisor, or other levels of supervision or administration who could directly influence the lower levels of decision-making regarding the placement of the child. This provision does not exclude these agency personnel from being a part of the review panel. However, at least one other member who is not in that direct line of influence and who can provide a point of view independent of those in line authority must be a member of the review panel.

The proposed regulation requires that persons involved in the administrative review receive instruction in their role and the purposes of their review (Sec. 1356.40(d)(4)(ii)). An administrative review panel may be comprised of a majority of persons who are not agency personnel. It is important that they understand their roles within the context of the purpose of the review, the agency's child welfare services system and the program objectives. An understanding and awareness of the rights and responsibilities of the public agency as well as the family, foster family, and child will help to ensure that their participation in the review process will promote the best interests of the child and family.

The State Agency has responsibility for establishing its own review system, according to its own geographic needs and resources available. The proposed regulation does not prescribe how a State is to do this, as logical limitations on the time of agency staff and volunteers will adequately determine the number of panels that must be appointed to review the State agency's cases.

(4) *Dispositional Hearings.*—The law requires that dispositional hearings be held by a court of competent jurisdiction or an administrative body appointed or approved by the court, no later than eighteen months after the original placement and periodically thereafter during the child's continuation in foster care. We are proposing that after the initial dispositional hearing, subsequent hearings be held every twelve months

unless the court orders a different time period (Sec. 1356.40(d)(5)(i)). A second dispositional hearing consequently would occur only if the child had been in care approximately 30 months, with subsequent hearings every 12 months thereafter. The Department believes that the need for protection increases rather than decreases as the child remains in foster care without a permanent home.

(5) *Procedural Safeguards for the Child and Parents.*—The law and the Department recognize the need for specific procedural safeguards for the child and parent(s). The proposed regulation specifies procedural safeguards in a significant action or event undertaken by the agency which affects the child or the family. These safeguards require that the child and family be given advance notice of the action (Sec. 1356.40(d)(6)(ii)(A)), and an opportunity to present their opinions to the preson responsible for the case management or delivery of services (Sec. 1356.40(d)(6)(ii)(D)).

Procedural safeguards will apply to every child under title IV-E (Sec. 1356.40(d)(6)) unless the agency can demonstrate that the child's health or well-being would be endangered by prior notification of the actions planned.

(B) Appeals, Fair Hearings, and Grievances

States are required to provide a system of appeals and fair hearings for title IV-E (Sec. 1356.30(g)) and title IV-B (Sec. 1357.20(c)(11)). Under this system applicants or recipients may appeal denial, reduction, or termination of service(s) or benefit(s); or the failure of the State agency to act on a request for service(s) or benefit(s) with reasonable promptness.

The requirement for a system of fair hearings and appeals is written into the new regulation in essentially the same form as is currently in effect under the IV-A Foster Care program, the IV-B program and the title XX program. The mechanism for fair hearings is already in place for these programs. Many children receive services from all of these programs, and all programs are operated by the same agency. For these reasons the Department believes that establishment of this common requirement will not create an additional burden on State agencies. Moreover, the requirement encourages coordination and consistency to protect the rights of the applicants for and recipients of services under these programs.

States must also provide a system for recipients to present grievances to the State agency concerning the operation of a service or benefit program (Sec. 1357.20(c)(11)). The current IV-B and IV-A regulations require a grievance system. The Department believes that such a system is necessary in order to allow recipient involvement in a form that will ensure efficient administration of the State plan. It is also a cost efficient requirement, in that an informal grievance system will serve to reduce the number of cases requiring a full scale hearing and appeal.

C. Program Manuals and Issuances

The availability of program manuals is necessary to assure recipients knowledgeable participation in the program and informed exercise of their fair hearings rights.

D. Safeguarding Information; Personnel Standards.

Departmental provisions for safeguarding information currently in effect for title IV-A and XX programs are made applicable to the IV-E and IV-B programs under this regulation by referral to the existing regulations (Sec. 1356.30(f) and Sec. 1357.20(c)(12). The government-wide requirement with respect to use of merit personnel standards in 5 CFR Part 900 will apply to the title IV-E and IV-B programs.

E. Reasonable Efforts: Reunification Services and Preplacement Preventive Services Under Title IV-E.

Section 471(a)(15) of the Act requires that effective October 1, 1983, States make reasonable efforts in each case: (a) prior to placement in foster care, to prevent or eliminate the need for removal of the child from his or her home; and (b) make it possible for the child to return home. Reasonable effort is broadly defined as the State having services systems in place that are required in Sec. 1357.30(a)(5) and (b)(3) and ensuring that they are appropriately applied in each case according to this proposed regulation and the State developed guidelines for workers.

States may meet the requirement under IV-E (Sec. 1356.40(e)) by meeting the respective requirements for reunification (1357.30(a)(5)) and preplacement preventive services (Sec. 1357.30(b)(3)) provided under title IV-B. The reasonable efforts provision under IV-E cross references the relevant IV-B provisions. For a more complete discussion of the relevant IV-B provisions, see *Requirements for State Eligibility for Additional Payments* under the IV-B section of this Supplemental Information.

To meet the reunification service requirement, a State must implement a program of services designed to reunify children with their families. That program of services must contain individual counseling for parent(s) and child (Sec. 1357.30(a)(5)(i)(A)) and other reunification services the state identifies as necessary and appropriate (Sec. 1357.30(a)(5)(i)(B)). To ensure that reasonable efforts are made to provide these services to each child or family in need, the proposed regulation requires that there be documentation in the case plan of efforts to reunify the child with his/her family, and statement as to why these efforts failed or were not required. The law and proposed regulation intend that services be readily accessible to each IV-E child and family in need.

The preplacement preventive services requirement in the proposed regulation parallels the reunification services requirement in that a program of essential preventive services must be implemented and operating. The program must contain the following services: twenty-four hour emergency caretaker and homemaker services; day care; crisis counseling; individual and family counseling; emergency shelters; and access to emergency financial assistance and arrangements for the provision of temporary child care to provide respite to the family for a brief period (Sec. 1357.30(b)(3)(i)). In addition, the State must provide other services which it identifies as necessary and appropriate (Sec. 1357.30(b)(3)(ii)). To comply with the provision in the law requiring that reasonable efforts be made in each case to prevent removal of the child from the family, the regulation requires that there must be documentation in the case plan of efforts to prevent the need for placement and a statement of why those efforts have failed. The required services must be available and accessible to all children and families in need, not just the IV-E child who by definition is already in foster care. Preventive services are intended to reach the child before he or she becomes a IV-E foster child, and therefore, must be available to all children in need.

The Department believes it is important to reiterate that reunification and preplacement services be available and readily accessible to all children and families in need. A reasonable effort must go beyond an explanation in the case plan that these services were not available. The caseworker must be given the tools essential to implementing the goals of the law and proposed regulation. The required services are essential tools and must be available for the caseworker to utilize.

The regulations also require that written guidelines be prepared by the State Agency to assist the caseworker in

providing reunification and preplacement preventive services (Sec. 1357.30(b)(3)(iii)). These guidelines are intended to assist the worker to make appropriate case assessments, to determine appropriate services, and to ensure that decisions serve the best interests of the child and family.

F. Standards for Foster Homes and Institutions.

Pub. L. 96-272 provides that the standards for child care institutions or foster family homes must be reasonably in accord with recommended standards of national organizations including standards related to admission policies, safety, sanitation, and protection of civil rights (Sections 471(a)(10) and 2003(d)(i)(F) of the Act).

In writing the regulatory provision implementing the law the Department considered a wide range of options from preparing detailed, required Federal standards to regulating only the areas to be covered in standards, thus permitting States to develop the specific requirements. The Department has adopted the latter approach by presenting the basic elements that each State must address in its standards for foster care homes and child care institutions (Sec. 1356.40(h)). The detailed standards must be reasonably in accord with the recommended national standards. The required areas to be addressed in State standards must be present to adequately safeguard children in foster care and promote permanency planning. The Department believes that States must have flexibility in determining the specific requirements. The Department also considers that the proposed approach will protect the child and will not create extensive or burdensome new Federal requirements.

With regard to the use of standards developed by national organizations and already adhered to by many States, it is proposed that the State have flexibility to use one or all of the designated sets of standards as the basis for development of their own requirements (Sec. 1356.40(h)(2)). The sets of standards addressed in this proposed regulation were developed by national organizations with experience and established credentials in the field of child welfare.

The national standards cover more areas than those addressed in this regulation. The selection of particular areas does not imply that other areas are not important in operating and providing services to children. The areas addressed were selected because they deal with matters that impact directly upon children and their families. This includes health and safety for the children, provision of basic care needed by all children and activities which are needed to cary out permanency planning.

G. Review of State Standards and Reimbursement

The law as implemented by this proposed regulation requires that States periodically review their standards for foster care homes and child care institutions (Sec. 1356.40(j)). It also requires that States review the level of payment for foster care maintenance and adoption assistance to ensure their continuing appropriateness (Sec. 1356.40(k) and Sec. 1356.60(e)). The Department is proposing that standards be reviewed every three years, and the level of payment for foster care maintenance and adoption assistance be reviewed every two years (Sec. 1356.40 (j) and (k) and Sec. 1356.60(e)). The Department considered making the review periods consistent, but recognized that costs change rapidly. Also, review of payment amounts should be a less complex process than review of the standards. Methodology for data gathering and analysis of cost variables affecting amounts can be standardized to provide the agency with valuable and current information. The Department proposed a longer cycle for standards review, believing that the three year cycle is appropriate to the difficulty of the task. States can develop their own method of review provided that public participation occurs in the review process.

H. Placement Pursuant to a Voluntary Agreement

The new provision in the Act for FFP in expenses for voluntary foster care placements is a significant departure from the title IV-A foster care program in which only placements resulting from judicial orders were considered eligible for FFP. For the first time, FFP can be claimed for foster care maintenance payments made on behalf of children placed under a voluntary placement agreement as long as specified requirements are met (Sec. 1356.50(a)). Many of these requirements protect the rights of the child and the parent(s) when the child enters foster care under a voluntary agreement and with the assurance of appropriate services to the child and the family. The voluntary placement agreement must be a written binding agreement which states the legal status of the child, and the rights and obligations of the parent(s) or guardian(s), the child, and the agency while the child is in placement (Sec. 1356.50(c)(2)). The voluntary placement agreement must be clearly explained to the parents and must be revocable upon the request of the parents or guardian(s), unless the State opposes the request for revocation and obtains a judicial determination that the child's best interests would not be served by returning the child home (Sec. 1356.50(f)). The regulation requires that the parent(s) gives the State agency at least five work days notice of their intent to revoke the agreement. The State must either return the child or obtain a court order continuing the child in care within the five days. DHHS considered 24 hours and 72 hours as alternatives to the five day period. Both were rejected as being too brief a time for the agency to take the proper action to respond to the revocation. If, on the other hand, the child and family are easily prepared for the child's return, the return should proceed with all due speed. The Department requests comment on the period of advance notice.

I. Conditions for Payment of Voluntary Placements.

The use of the voluntary placement agreement reduces agency and court costs and offers maximum protection to the child and family. Federal financial participation in the costs for voluntary foster care placements are available when the basic title IV-E plan requirements are met and all the provisions contained in Sec. 427(b) of the Act are in place and operating in the State. These provisions are: completion of an inventory (Sec. 1357.30(a)(3)); implementation and operation of Statewide information system (Sec. 1357.30(a)(4); case review system (Sec. 1356.40(d)); a reunification services program designed to return children in foster care to their families (Sec. 1357.30(a)(5)); and preplacement preventive services designed to help children remain with their families (Sec. 1357.30(b) (3) and (4)). No Federal payments will be available for a child in care for more than 180 days without a determination by a court of competent jurisdiction to the effect that continued placement is in the child's best interest (Sec. 1356.50(b)). Pub. L. 96-272 (Sec. 102(a)(1)) provides for FFP in allowable expenditures for voluntary placements made after Spetember 30, 1980, and before October 1, 1983.

J. Availability of Federal Funds To Reimburse Public Child Care Institutions.

The law and this implementing regulation have broadened eligibility for FFP in foster care maintenance payments to include public child care insitutions accommodating no more than

25 residents. However, the law excludes FFP for placements in detention facilities, forestry camps, training schools or other facilities operated primarily for the detention of children who are determined to be delinquents (Sec. 1355.20(d)). Group homes in the community which primarily serve delinquent youth fall within the restriction of the definition and are not eligible for FFP under this program.

K. Establishment of Goals in State Law.

The law (Sec. 471(a)(14) of the Act) as implemented by this proposed regulation, requires that States write specific foster care goals into State law for each fiscal year beginning with Fiscal Year 1983. The State law must be enacted on or before October 1, 1982 (Sec. 1356.40(f)). This provision is a State plan requirement which must be met if a State is to be eligible for IV-E payments (Sec. 1356.80(c)). The Department encourages State agencies to begin working with their State legislatures immediately and *not* await publication of the final regulation to make preparations to comply with this provision.

L. Adoption Assistance Program.

For the first time, Federal financial participation is available to provide adoption assistance for children with "special needs" (Sec. 1356.60). Previously, either the State or the adoptive parents were responsible financially for the care of the child. The severe costs of providing proper care for children with special needs has been a significant hindrance to the adoption of thousands of AFDC-foster care children.

(1) *Initiation of Adoption Assistance Payments.*—Congress specified that adoption assistance payments were to begin at the time of adoption. However, if an interlocutory decree granting the prospective adoptive parent(s) guardianship or legal custody pending a final decree of adoption is issued, payments may begin at that time (Sec. 1356.60(a)(3)). The intent of Congress was to ensure that these children have the additional procedural safeguards provided by a judicial determination. The option of having assistance begin at placement for adoption was rejected as contrary to Congress' desire to have judicial involvement before initiating assistance payments.

(2) *Periodic Recertification of Adoption Assistance Payment.*—Pub. L. 96-272 specifies that the amount of the adoption assistance payments may be readjusted periodically by the State with the concurrence of the adopting parent(s) and that the parents shall keep the State informed of any change in circumstances.

The proposed regulation requires an annual recertification of the Adoption Assistance agreement including the amount of the payment to families that have adopted children with special needs (Sec. 1356.60(f)). The annual recertification is adapted from the Model State Subsidized Adoption Act and Regulation published by the Department in 1976. The Model Act has been implemented by several States with adoption subsidy programs.

(3) *Interstate Continuance of the Adoption Assistance Agreement.*—Adoption assistance agreements must contain a provision protecting the interests of the child when the adoptive family moves to another State (Sec. 1356.60(b)(3)(ix)). Effective October 1983, the adoption assistance agreement shall remain in effect regardless of the State of residence of the adoptive parent(s) and the child move to another State (Sec. 1356.60(b)(4)).

The Department has concluded that the adoptive parent(s) is entitled to know the parameters of coverage under agreements executed prior to October 1, 1983 (Sec. 1356.60(b)(3)). Therefore, the regulation has been drafted to require the State to include, in agreements executed prior to October 1, 1983, a clear statement on whether the agreement and attendant responsibilities remain in force if the adoptive parent(s) change their State of residence (Sec. 1356.60(b)(3)). While recognizing the October 1, 1983 effective date imposed by Sec. 476(b)(4)(A) of the Act, the Department believes that the pre-1983 informational requirement in the regulation will enable an adoptive parent(s) to make necessary and informed decisions about the child and themselves.

(4) *Eligibility for Title XX and Title XIX Services.*—The Adoption Assistance and Child Welfare Act of 1980, Pub. L. 96-272, mandates title XIX and title XX eligibility for children for whom payments are made under the Foster Care Maintenance Payments Program or the Adoption Assistance Program. These children are deemed to be recipients of Aid to Familes with Dependent Children (AFDC) under title IV-A or IV-E of the Social Security Act (Sections 472(d) and 473(b) of Pub. L. 96-272) for purposes of title title XIX and title XX of the Act.

Both Medicaid (title XX of the Act) and title XX are State-administered programs, jointly financed by the Federal and State governments, that provide medical assistance and social services to certain groups of low-income persons. AFDC recipients are automatically eligible for both programs by virture of their AFDC status. By providing for "deemed" AFDC status, the new legislation provides mandatory title XIX and title XX coverage for children receiving payments under the States' IV-E program.

The Health Care Financing Administration's proposed regulation amendment accompanying this NPRM amends the title XIX program to require the State making the foster care maintenance payments or the adoption assistance payments to provide Medicaid coverage. This consistent with the longstanding requirement that the State providing cash assistance that triggers Medicaid eligibility is also fiscally responsible for providing Medicaid for the individuals involved.

Usually, when a recipient of a cash assistance program that is linked to Medicaid moves to another State, the individual loses eligibility for that program and Medicaid in the originating state, and is covered for both programs by the new State if he or she meets that State's requirements. However, as explained earlier, for purposes of title IV-E, the Department has determined that, when a family moves to another State, eligibility and responsibility for adoption assistance payments will remain with the originating State (Sec. 1356.40(c) and 1356.60(g)). Therefore, eligibility and responsibility for providing Medicaid coverage will remain with the originating State.

This is a continuation and extension of the Department's policy that has been applied to the AFDC Foster Care program previoulsy authorized under title IV-A of the Act. That program required that the originating State continue responsibility for AFDC foster care and Medicaid when a foster care placement is made out-of-State. It is also consistent with the general intent of the title XIX statute and the requirement noted above that ties State responsibility for Medicaid to State responsibility for cash assistance.

The proposed regulation provides that children for whom adoption assistance payments are made will be deemed eligible in the State of residence and that State will be responsible for the provision of title XX services if these services are requested and needed. This provision is consistant with current program provisions in title XX.

Because eligibility for title XIX and title XX are triggered by an actual cash payment under the adoption assistance program, however minimal, States should be sure that at least a minimal payment is made to families who particularly need title XIX coverage but not necessarily other assistance or

services. The Department welcomes comment on this proposed regulation.

(5) *Active Promotion of Adoption Assistance Program.*—The Department recognizes the need to promote and publicize the availability of adoption assistance so that prospective adoptive parents, including current foster families, will be aware that this program exists. This will enable a larger number of potential adoptive parents to be informed about the program and to consider adopting children with special needs. The dissemination of information is necessary to the success of the entire adoption assistance effort which rests on willingness of the citizenry to become involved in the program. Active promotion also provides the opportunity to share this information with the general public so that an understanding of the purpose and existence of the adoption assistance program is more widespread (Sec. 1356.60(h)).

M. Training Under Title IV-E.

The implementation of the title IV-E program requires the use of a wide range of skills on the part of the child welfare worker providing services to children, parents, foster parents, and potential adoptive parents. To ensure the availability of essential skills, staff training must be an important element of the State agency's management plan. Federal financial participation is available at the 75% rate for training expenditures incurred under title IV-E (Sec. 1356.80(b)). The regulation currently governing staff development expenditures under title IV-A, 45 CFR 235.60-66, is being applied to title IV-E. That regulation appears to be most advantageous to the program. However, State agencies should give careful consideration, in their planning, to the Assessment of training needs and development of training plans in those programs which are to be coordinated with title IV-E so that resources for staff development can be combined beneficially. This will aid in achieving optimal use of those resources. The regulation includes training costs for foster parents, adoptive parents and child care institution staff related to providing foster care (Sec. 1356.80(b)). Title IV-E of the Act establishes a continuing relationship between adoptive parent(s) and the agency to provide continued support, as needed, to the adoptive parent(s) in the care of the child. This provision is interpreted to include training for this purpose.

N. Withholding of IV-E Funds for Non-Compliance.

The basis and procedure by which the Department, would if necessary withhold funds based on non-compliance are stated in the proposed regulation (Sec. 1356.75). The proposed regulation adopts present Department-wide procedures (45 CFR 213) for handling this type of action. However, it is anticipated that the Department will not use this authority unless and until other less formal methods of ensuring compliance with the approved title IV-E State plan requirements have been exhausted.

III. Fiscal Requirements

Federal financial participation is available for state expenditures for foster care maintenance payments and adoption assistance payments at the Federal medical assistance percentage rate as promulgated by the Secretary in accordance with Section 1905(b) of the Act. In addition, the regulation provides for an FFP rate of 75% for State training expenditures and 50% for other expenditures needed for proper and efficient administration of the State plan (Sec. 1356.80).

Training expenditures may include both in-service training and training at educational institutions, both long-term and short-term, through grants to the institution or direct financial assistance to trainees. Reimbursement is available for training persons employed, about to be employed foster parents or other child care staff providing foster care services to IV-E children (Sec. 1356.80).

The costs of conducting the activities essential to fulfilling the plan requirements under Sections 471 of the Act (Sec. 1356.80) are considered as necessary for the proper and efficient administration of the State plan under title IV-E, except for the nonrecurring costs of adoption and the cost of complying with the reporting requirements which are deemed to be child welfare services costs and may not be reimbursed under this part. Furthermore, the costs of direct services to children, parents or foster parents to ameliorate personal problems and which go beyond the activities specified in the regulation are to be funded from other programs. The regulation delineates such social service costs from those required to carry out the provisions under title IV-E. Apart from these exceptions it is recognized that the activities prescribed in the law and the protections provided under Section 427 may overlap. The regulation, therefore, provides flexibility to the States to choose which program to charge these costs and the method used for charging and claiming costs (Sec. 1356.80 (c) and (d)). Because of this flexibility it is important that there be assurances and controls to prevent duplicate charges for the same activities and costs and to allocate these costs to the appropriate programs as outlined in the State cost allocation plan.

A. Allotments.

There are a number of provisions in the Amendments that emphasize the primary goal of helping children remain with their families when problems arise. One of these provisions is the limitation, in the form of State allotments, on the Federal funds that may be paid on behalf of foster children under AFDC-FC programs. *This provision is directed toward limiting the inappropriate use of foster care and it will apply equally to titles IV-A and IV-E foster care.* We are planning to issue regulations to state this for title IV-A-Foster Care. The allotment represents the maximum amount of FFP available in foster care. The allotments are mandatory only if the title IV-B appropriation reaches certain "trigger" levels specified in the Act. However, even if the appropriations under IV-B do not reach the specified levels, and the trigger is not activated, the allotment must be computed. Funds allotted but not used for title IV-A or IV-E foster care may be transferred to title IV-B and used for child welfare services, if States meet certain other conditions, to protect children and their families, as specified in Section 1356.80(e)(6). In summary, then, the allotments must be computed and will serve as a planning aid for States and the District of Columbia. (The Territories have a separate ceiling under Section 1108(a) of the Act.)

The law specifies three methods for the determination of the amount of allotment.

Each State is entitled to the higher of the amount calculated under paragraphs (1) or (2) of Section 1356.80(e). Some States may be entitled to choose the amount calculated (3) of Section 1356.80(e). The State need not select the same option each year.

The first method uses the 1978 expenditures for AFDC-FC as a base amount and provides for a percentage increase (or decrease) based on the changes in the Consumer Price Index for each fiscal year (1.3332% for FY 1981 (Sec. 1356.80(e)).

The base amount is composed of FFP in three types of State expenditures computed for fiscal year 1978 and added together: maintenance payments, administrative costs and training costs.

Maintenance payments: The regulation describes the payments as limited to two categories. The first is allowable payments matched by Federal funds that have been claimed or may be claimed and paid, which are submitted

to HHS within the time limits specified in Section 306 of Pub. L. 96-272. The Act uses the word "payable" rather than "paid". However, it is clear that Congress intended to allow only actual payments or timely claims that may be paid if funds are available, with one exception, which is discussed below.

The clear purpose of the first allotment, for which the base amount is the foundation, is to limit FFP to the Fiscal Year 1978 payments but allow an annual increase (ten percent per year, compounded) for inflation (Sec. 1356.80(e)).

The exception mentioned above and the second category of maintenance payments included in the regulation is the *Youakim* Children. On February 22, 1979, the Supreme Court of the United States in *Miller vs. Youakim* 440 U.S. 125 (1979), ruled that children whose foster care was provided by relatives who met the requirements of Section 408 of the Act (for AFDC-FC) were entitled to be paid at the FC rate rather than the AFDC rate, which is generally lower. The ruling was not applied retroactively (except in the case of the individuals bringing the lawsuit). Therefore, the thirteen States that had been paying AFDC rates to relatives were not required to make increased retroactive payments to recipients eligible for AFDC-FC during Fiscal Year 1978. However, those States have been required to make foster care payments to eligible recipients after the case was decided. In effect then, the court required thirteen States to increase their AFDC-FC payments to one class of recipients. Congress wanted to make the ceiling fair to those States and to avoid a potentially costly burden to those States. Therefore, the proposed regulation (Sec. 1356.80(e)) specifically includes the Youakim Children, where a State by law, regulations or policy did not make foster care payments in FY 1978. The expenditures that would have been made on their behalf are included in the base amount for Fiscal Year 1978, even though they were not paid at the AFDC-FC rate in FY 1978.

Section 474(b)(4)(C) of the Act includes administrative and training expenditures in the base amount: "administrative expenditures attributable to the provision of such aid [payments under Section 408] as determined by the Secretary." We have provided three procedures for attributing those administrative expenditures, for inclusion in the base amount.

First, any State which can document actual administrative expenditures for FY 1978 AFDC-Foster Care may report them to the Department for inclusion in the base amount.

Second, in the regulation we have adopted a formula for administrative expenditures based on actual costs per AFDC case, and the number of foster care cases for whom payments were made, as described in the maintenance payments portion of the allotment. In order to allow for the changed nature of the foster care program, from a payments program to a goal-oriented program to return children home, we have specified the functions which may be attributed to administrative expenditures for the cases included in the maintenance payments section even if not claimed or paid under title IV-A. Those functions are the costs of conducting eligibility determination and redetermination, quality control, fair hearings, agency activities related to judicial determination, placement, case review, case management, case supervision, rate-setting, recruitment of foster care homes and institutions, licensing and a proportionate share of general related agency overhead.

The third procedure available to States is to provide the Department with a report specifying the administrative costs associated with the payments for foster care maintenance for the functions specified above for a period of at least 3 calendar months of fiscal year 1981. That amount is reduced for inflation since FY 1978 (using the Implicit Price Deflator for State and Local Government Purchases calculated by the Department of Commerce for each State). The amount is adjusted for an annual amount and reduced by 50 per cent (the FFP rate in administrative expenditures). Reports must be submitted no later than 30 days after the end of fiscal year 1981. In effect, this method permits States to use actual FY 1981 costs, which may be higher for AFDC foster care than for AFDC, as a substitution for the second procedure. We invite comment on all three procedures.

For the attributable training expenditures as a part of the base amount (fiscal year 1978), the same explanation generally holds true except that the third procedure is not available because of the small amount of funds that would be included. No actual fiscal year AFDC-FC training claims have been submitted (or were required to be submitted) to the Department separate from other AFDC training claims, but States may now send that information (Sec. 1356.80(e)(l)(iii)(c). Alternatively, the Secretary has determined that attributable training expenditures for each State should be: the ratio of AFDC-Foster Care to all AFDC cases for FY 1978, multiplied by the total AFDC training expenditures for FY 1978, multiplied by the Federal share of these expenditures (75%). All data used are State-by-State data.

We have also specified in the regulation that the actual claims for maintenance payments must meet the following conditions: they must be allowable, supported by documentation and submitted under the time constraints of Section 306 of Pub. L. 96-272. Reports must also be for allowable costs and supported by documentation. They must be submitted to the appropriate ACYF regional office no later than 45 days after the end of the second quarter of Fiscal Year 1981, except for the reports in the third procedure for attributing administrative expenditures.

The regulations (at Section 1356.80(e)(1)(iii)(E) allow the inclusion of claims or reports in which the State and the Secretary have a dispute to remain as a part of the computed base amount until the Department has resolved the dispute by final administrative action.

For the second method of determining the State's allotment, the State's allotment is $100 million times a percentage equal to the State's population under 18 compared to the U.S. population under 18 (fifty States and District of Columbia) (Sec. 1356.80(e)(2).

For the third method of determining the State's allotment (Sec. 1356.80(f)(3)), the base amount determined under the first method is used. If for a fiscal year, the average monthly number of children in the State's foster care program under IV-E in the State is less than the comparable national average both in FY 78 and in *each* of Fiscal Years 1982-84 the State's base amount (FY 78) is increased by the percentage of AFDC-FC increase (in the average monthly number of children) up to a maximum (ten percent per year compounded over FY 78, beginning with 33.1% for FY 81). The child count for these calculations includes the same *Youakim* children discussed under the base amount maintenance payments.

The Commissioner, as the Secretary's designee, will publish interim allotments established under the third method within six months after the beginning of the fiscal year, and final allotments not later than nine months after the end of that same fiscal year (Sec. 1356.80(f)(3)(vi)).

The State must make a choice and notify the Commissioner of the selected option no later than 45 days after the end of second quarter of the fiscal year. This choice is necessary in order to

insure States that payments can be made to them in a timely fashion for AFDC-FC and for IV-B.

B. Transfer of Funds.

Section 474(c) of the Act permits States to transfer unexpended funds within a State's foster care allotment under title IV-E to title IV-B, provided the State's allotment was determined on the basis of either the first or second method described in paragraphs (1) or (2) of Section 1356.80(f). To transfer an amount which added to the title IV-B allotment would exceed the share the State would have been entitled to had the IV-B appropriation exceeded $141 million, the State must comply with the protections of Section 427(a) of the Act (Sec. 1357.30(a)), concerning inventory, a case review system, an information system and services to return children to their families or have them adopted. If the title IV-B appropriation for two earlier consecutive years has equalled $266 million, the State must meet the requirements of Section 1357.30(b) in order to transfer any funds to IV-B.

Even if the IV-B appropriations do not reach the "trigger" levels specified in Section 474(b) and no limitation is in effect on the Foster Care allotments, A State may transfer unused funds under the allotment amount to title IV-B for child welfare services. States must meet the same requirements as when the limitations are in place. In addition, the amount that can be transferred is limited by the difference between the funds received under title IV-B (Section 420) and the amount of the IV-B allotment that would have been available had the IV-B appropriation been equal to or greater than the amount necesssary to make the foster care allotments mandatory.

Funds transferred to title IV-B must be obligated for expenditures in title IV-B within the same fiscal year for which they were first made available. Requests for transfer of the funds must be made 45 days before the end of the third quarter of the fiscal year.

IV. Title IV-B—Child Welfare Services

The Child Welfare Services Program has been a part of the Social Security Act since the Act's inception. In 1968 Congress transferred the program to title IV, Part B of the Act [Section 420-425 of the Act]. Historically, title IV-B has provided Federal grants to establish, extend and strengthen child welfare services in the States. Grants are made to State agencies on the basis of a plan developed jointly by the ACYF Children's Bureau and the State agency. The amended Act reaffirms this partnership between the Federal and State governments for the provision of child welfare services by the State.

Under title IV-B, formula grants are allocated to the States for providing and improving child welfare services to children and their families in need of services, without regard to income (Sec. 1357.20(b)).

In recent years States have used approximately 70-80% of IV-B funds for foster care maintenance payments. Other services including adoption, day care and protective services to abused and neglected children have also been provided with the IV-B funds.

A. Availability of Services in All Political Subdivisions.

The existing requirement that child welfare services be available in all political subdivisions of the State by July 1, 1975 has been replaced by the requirement that the State Plan "contain a description of the steps which the State will take to provide child welfare services and to make progress in: (Sec. 1357.20(c)(4)):

(a) covering additional political subdivisions;

(b) reaching additional children in need of services; and

(c) expanding and strengthening the range of existing services and developing new types of services"

The emphasis in this proposed regulation is to continue to make progress toward the ultimate goal of making comprehensive, quality child welfare services available on a Statewide basis.

B. The Single State Agency and Single Organizational Unit.

The proposed regulation (Sec. 1357.20) paraphases Pub. L. 96-272 (Sec. 422(b)(1) and specifies responsibility of the unit chief for the policy development and program operation of the title IV-B Child Welfare Service program. The change embodied in the proposed regulation is not significantly different from the current requirement.

C. Description of Services.

The proposed regulation (Sec. 1357.20) requires a description of all child welfare services to be provided, the geographic areas in which they are available and what is being done to expand, improve and strengthen those services or provide new ones. As part of ensuring a rational planning and priority setting process, the States are asked to describe the basis for determining services to be added or expanded and how these new services are related to extending the services and reaching additional children in need of services. These conditions replace the former "Statewideness" provision contained in the old regulation.

D. Description of The Staff Development and Training Plan.

The proposed regulation (Sec. 1357.20(c)(5)) requires that the State agency staff development and training plan include, at a minimum, the manner of allocating resources, assessing the need for training, procedures for evaluation of plan implementation and the agency's plans for use of paraprofessionals and volunteers. These activities have been identified as necessary to a rational and well thought out plan. The State agency's staff development and training plan will supplement the training plan required by title XX submitted to the Regional Administrator of the Office of Human Development Services. The State agency's entire IV-B staff development and training plan need not be submitted to ACYF, but it must be available for review by Federal staff. Only the description required by the Long Range Strategy must be submitted (Sec. 1357.40(a)(2)(ii)(C)).

E. Advisory Committee.

The current IV-B requirement mandating advisory committees (45 CFR 1392.4) has been in effect for many years. Nothing in the Act amended by Pub. L. 96-272 is in direct conflict with the requirement. The statutory basis remains the same under the statute as amended by Pub. L. 96-272. Pursuant to the Secretary's responsibilities for joint development, and his/her general rulemaking authority under Section 1102 of the Act, public participation has been required in the development of the child welfare services plan (Sec. 1357.20(c)(8)).

The Department has a continuing and strong commitment to involve the public in the child welfare service program. Most States have established these committees. The viability and success of the Federal regulation development and implementation depend on the input, involvement and investment of the States and other public and private constituencies as demonstrated in the meetings, publication, comment period and regional hearings. Similar involvement must also occur at the state and local levels. These Committees will form the partnership and assure the resources for the states to accomplish the Congressional intent of Pub. L. 96-272.

Through involvement of public and private agencies and citizens, the mandates of this new law can be fully realized at the local, service delivery and community levels.

F. General Requirements Common to Social Service Programs.

Fair hearings, safeguarding information, access to program manuals and issuances, and adherence to the merit system of personnel administration are also required in the proposed regulation. The changes in these provisions do not represent a substantive departure from present policy (Sec. 1357.20(c)). For a full discussion of these provisions see Section II, B. of the Supplemental Information.

G. Requirements for State Eligibility for Additional Payments

To help finance the services required and to encourage changes in the foster care system, Congress provided in Pub. L. 96-272 (Sec. 427 of the Act) that in any year in which the title IV-B appropriation exceeded $141M, a State can not receive its share of title IV-B funds in excess of that $141M unless it has implemented the following procedures and protections.

1. Conduct an inventory of all children who have been in foster care more than 6 months, make determinations about the necessity and appropriateness of their placements, and provide a report to the Secretary (Sec. 1357.30(a)(3));

2. Have a Statewide information system capable of tracking every child who is in foster care or who had received care within the preceding 12 months (Sec. 1357.30(a)(4));

3. Have a case review system for each foster child under the State's supervision (Sec. 1356.40(d)); and

4. Have a service program designed to return children to their own home or to achieve another permanent placement at the earliest possible time (Sec. 1357.40(A)(5)).

1. *Inventory.*—The Inventory (Sec. 1357.30(a)(3)) is a key element in requiring States to help reunify children in foster care with their parents. It impels States to establish basic information about the status of each child in foster care and to develop a plan for that child based on a case review. The Inventory required in the Act, as implemented by the proposed regulation, serves to establish an accounting of children in foster care so that their status may be reviewed and actions taken to facilitate their return home as quickly as possible. For children who cannot be returned home, alternative services leading to permanence for the child must then become the goal.

While the proposed regulation (Sec. 1357.30(a)(3)) specifies the content of the Inventory, the States are given latitude to determine the procedures. The Inventory should be perceived as a source of initial data on which to construct the case review program and to provide baseline data for the Statewide information system. The determination of whether a State has completed the inventory is based upon a one-time report with specified content which summarizes the respective data (Sec. 1357.30(a)(3)(v)). This report provides an accounting of children in foster care and an indication that the inventory has been completed.

2. *Statewide Information System.*—The Statewide information system (Sec. 1357.30(a)(4)) is critical to the successful management of a child welfare program. The regulation which applies to the information system is framed to leave the States maximum flexibility in the design, configuration and technical features of the State system's hardware and software. In addition, flexibility in systems design is encouraged to accommodate the information required to satisfy the law. This includes essential information requirements (Sec. 1357.30(a)(4)(ii) (c) and (D)), State and local agency information needs for monitoring and evaluation (Sec. 1357.20(c)(10)), and audit functions (Sec. 1357.20(c)(9)). The information requirements are also intended to assist the States in complying with the reporting requirements of joint planning, the IV-B and IV-E State plans, fiscal documents and records, and the Federal Child Welfare Reporting System. Included in the System is the intended use of the Child Welfare Dictionary of Common Usage which will establish nationwide definitions of important terms and elements. The System including the "Dictionary", is currently being field tested in eight States, California, Florida, Maryland, Ohio, Vermont, North Dakota, Mississippi and Oklahoma. The System's documentation carefully specifies the data elements, definitions and reporting format that the Department will need, and proposes to require to meet the Congressional reporting mandates of Sections 471(a)(6), 476 of the Act and Section 102(e) of Pub. L. 96-272. While the field test is underway, the Department will concurrently request OMB clearance for nationwide implementation of the System, including the Dictionary.

The requirements for information evolving from the Pub. L. 96-272 are consistent with the data that the States use in the daily operation of their case tracking and management systems. The Department has been sensitive to State reporting requirements and the burden which they impose.

In specifying the national reporting and evaluation requirements, only data elements essential to Federal planning, Congressional reporting and administrative functions have been included in order to minimize the burden.

3. *Case Review System.*—The case review system is discussed in the IV-E portion of this Supplementary Information.

4. *Program of Reunification Services.*—Pub. L. 96-272 (Sec. 427(a)(2)(C)) requires that States implement and operate a service program to help children, where appropriate, return to families from which they have been removed or be placed for adoption or legal guardianship. To meet the reunification service requirement in the law, the regulation requires States to implement a program of services designed to unify children with their families. That program of services must contain day care services, homemaker or caretaker services, family or individual counseling for parent(s) and child (Sec. 1357.30(a)(5)(i)(A)) and other reunification services the state identifies as necessary and appropriate (Sec. 1357.30(a)(5)(i)(B)).

The Department has required only those services it considers essential to accomplish the goals of the law—to reunite children and families. The three mandated reunification services are basic components of a support system to the family and child, following separation from and preparatory to return to the home. The specific focus and context of the services will be influenced by the circumstances under which the child was removed from the home. The services should represent the remedial response to the problems identified in the case plan.

The selection of the three mandated reunification services was based on the findings of the National Study of Social Services to Children and Their Families (Shyne and Schroeder, 1978), which listed five of the primary reasons for children and families receiving social services, including foster care: neglect of the child, unwillingness to care for the child, abandonment, emotional problems of the parent, and abuse of the child. Homemaker and Caretaker, Day Care, and Individual and Family Counselling are the services most likely to effect change in the home situation and lead to the return home of the child.

Homemaker services are those services which provide a qualified person to assist families with children in home maintenance and management in order to strengthen, support, supplement and restore parental capacity to care for

the children. An emergency caretaker provides care and supervision of a child in his or her own home at times when supervision is lacking because parent(s) are either temporarily absent or temporarily incapacitated. Day Care is the means for providing protection, care, and developmental experiences for children who parents need help in making child care arrangements for reasons other than employment, education or training and for children with special needs (e.g., disadvantaged, mentally retarded or emotionally disturbed children). Individual and family counseling provide help in the identification and resolution of problems related to personal functioning, social interaction, family stability and environmental factors. As described, the services are the core of agency support to families which allow reunification while reducing the risk of neglect, abuse, etc. and reinforcing the family's own strengths.

The Department considered requiring the provision of other services in addition to these services. The Department decided to make the provision of additional services optional (Sec. 1357.30(a)(5)(i)(B)) to give a State flexibility in tailoring its child welfare services program to the precise needs of its local constituencies under title IV-B. The States must have a program of essential services available for children in need. The Department does not intend to require that a program containing these core services be established in each political subdivision. The test of compliance with this provision is that the required services are available and readily accessible to each child and family in need of these services.

Under title IV-E, the law requires that by October 1, 1983, States make reasonable efforts to prevent the placement or eliminate the need for placement of the child and to make it possible for the child to return to his home (Sec. 471(a)(15) of the Act). This provision emphasizes the need for appropriate services to reach the child and family. This approach has been adopted under title IV-B. While requiring the establishment of a program of essential services, the Department is ultimately concerned that the relevant services reach the child and family in need. States can meet the requirement by ensuring that essential services are available and readily accessible to each child and family in need.

The proposed regulations require that written guidelines be prepared to assist the caseworker in providing the reunification and preplacement preventive services (Sec. 1357.30(a)(5)(i)(C) and (b)(3)(iii)). These guidelines are intended to assist the worker to make appropriate case assessments, to determine appropriate service, and to assure that decisions serve the best interests of the child and family.

The proposed regulation also requires States to have a program of services designed to facilitate adoption or legal guardianship (Sec. 1357.30 (a)(5)(ii)). The Adoption services provision is structured similarly to the reunification services program in that the State must implement and operate a program of required essential services comprised of legal services and adoption services (Sec. 1357.30(a)(5)(ii) (A) and (B)). In addition, the State program must contain other activities identified by the Agency as necessary and appropriate for permanent placement through adoption (Sec. 1357.30(a)(5)(ii)(c)). The State must also provide written guidelines to assist the caseworker in developing and implementing an appropriate plan for adoptive placement of the child (Sec. 1357.30(a)(5)(ii)(D)). The required services must be available to each child and family in need of these services.

In addition, Section 427(b) of the Act requires that if title IV-B funds are appropriated at the maximum of $266 million for two consecutive years, the title IV-B allocation for that State would be reduced to its share of $56.5 million, unless the State has implemented the required preplacement preventive services program in addition to the above described procedures and protections. The preplacement preventive services program (Sec. 1357.30(b)(3)) must contain the following essential services: twenty-four hour emergency caretaker and homemaker services; day care; crisis counseling; individual and family counseling; emergency shelters; procedures and arrangements for access to available emergency financial assistance; and arrangements for provision of temporary care to provide respite to the family for a brief period (Sec. 1357.30(b)(3)(i)). In addition, the State must provide other services which it identifies as necessary and appropriate (Sec. 1357.30(b)(3)(ii)).

The proposed regulation requires that there must be documentation in the case plan of efforts to prevent the need for removal from the home and a statement of why such efforts have failed (Sec. 1357.30(b)(4)). The required services must be available and accessible to all children and families in need.

Based on information available, the Department belives that the establishment of a program of preplacement preventive services is both cost-effective and essential to achieving the goals of the law. State agencies currently operate programs to prevent removal from the home similar to those required in the regulation. Between 1961 and 1977 the number of children in placement increased from 181,000 to 530,000 even though the total number of children decreased by one million over the same period. Permanency planning programs regularly find that about one-third of the children in long term foster care can, in fact, be returned to their own parent(s) usually after some services are provided to the family. These findings strongly suggest that earlier preplacement services to the families were not provided or were seriously deficient.

In a related effort, Davidson County Social Services, Nashville, Tennessee found that a system of Comprehensive Emergency Services operating 24 hours a day reduced the number of children placed in the various types of substitute care by almost 50% over a three year period. The Department has incorporated most of the elements of that system in this proposed regulation. There were also decreases in the number of repeat cases of child abuse and neglect, and in the reporting of delinquency among the older children. More recent prevention projects also report various degrees of success. All programs report that their efforts are cost-effective.

The proposed regulation also requires that written guidelines be prepared to assist the caseworker in providing the preplacement preventive services (Sec. 1357.30(b)(4)(iv)). These guidelines are intended to assist the worker to make appropriate case assessments, to determine appropriate servcies, and to assure that decisions serve the best interests of the child and family. In addition, the proposed regulation requires that each case plan contain documentation of efforts made to prevent the need for placement and a statement as to why such efforts failed to prevent the child's removal from the home. The Department believes it is important to emphasize that reunification and preplacement services be available and readily assessible to all children and familes in need. As proposed for reunification services, the Department has avoided imposing the more comprehensive and stringent requirement that these required services be established in every political subdivision because States must be permitted to exercise discretion in allocating essential services in a way that best matches demand with resources available. However, these required services must be readily

accessible to the child and family in need.

For the first time, FFP in the costs of voluntary foster care placements (Sec. 1356.50(a)) is available when all provisions contained in Section 427 of the Act are in place and operative. Section 427 requirements include the Inventory, the Statewide information system, the case review system, reunification services program and preplacement preventive services program.

The specificity in this regulation for each of the required procedures and protections provides clarity and gives direction to the States in knowing what is expected of them and gives direction to the Department in reviewing and approving requests from those States that apply for funds above $141M under title IV-B, the transfer of funds from title IV-E to title IV-B or reimbursement for the costs of voluntary placements of children in foster care.

To claim its share of funds appropriated under title IV-B when available funds are greater than $141M or to transfer money from IV-E to IV-B, a state must request the additional funds or transfer of funds and must certify that it has implemented the procedures and protections under Sec. 1357.30(a) of the proposed regulation.

To claim FFP in payments made for children voluntarily placed in foster care, the state must certify that it meets the provisions of Sec. 1356.50 (Voluntary Placements).

A State's eligibility for funds under this Part will be determined by review of State policies, procedures and practices and a sample review of case records.

H. Development of State Child Welfare Services Plan

Title IV-B requires that a State Child Welfare Services Plan be developed jointly by the Secretary and the State agency. For the past several years the State plans in effect were those developed in 1969. Since 1969, States have been submitting amendments to their plans (the last in 1975), and an annual budget that has been the basis for awarding the grants. In order to make the State plan and the planning process more relevant to the legislation the prposed guidelines for State plan development were revised and published in the Federal Register on February 22, 1980 (45 FR 12049) have been revised and will be republished.

The joint planning format consists of the following sections:

1. *Assurances*—The Assurances consitute the State Agency's commitment to meet the basic requirements of the law and regulations. They are submitted only once, unless otherwise required by the Commissioner of ACYF.

2. *Long Range Strategy*—In the Long Range Strategy, the State develops the goals for establishing, strengthening, extending and otherwise improving its child welfare services program over a period of two or three years. The Strategy is jointly developed by the State agency and the Children's Bureau. It must be submitted by the State agency to the ACYF Regional Office every two or three years at the State's option.

The Long Range Strategy consists of two discrete sections, the needs analysis and the long range goals and objectives. These two processes are interdependent. The needs analysis includes identification of needs and setting proirities among needs. Meeting the more important of these needs is a fundamental consideration in establishing the State's long range goals. The objectives are specific, measurable, short range activities necessary to achieve the goals.

3. *Annual Operating Plan*—The Annual Operating Plan is the yearly update of the State Child Welfare Services Plan. It will report the current status of the long range goals and objectives, indicate changed and new initiatives, and present an Annual Summary of Child Welfare Services.

4. *Annual Budget Request*—The Annual Budget Request is prepared by the State agency and submitted with the Annual Operating Plan. IV-B funds are disbursed quarterly based on this annual submission.

The guidelines and this regulation require that any Assurances which the State is not meeting must be included as goals and/or objectives in the Long Range Strategy section of the Child Welfare Services Plan. There are other Assurances which require the State to include certain information in its State plan, such as the description of services to be provided, geographic areas of availability, staff development and training plans and steps to be taken to improve and expand services.

The intent of the joint planning process, however, is for the States and Federal Government to work together to analyze the needs of children, youth and families, to plan and ultimately to accomplish initiatives and activities which respond to these needs and which may transcend the minimal requirements of law, regulation and good practice. The Long Range Strategy is that part of the plan in which these initiatives and activities are developed and set forth in measurable goals and objectives.

The goals and objectives of the Long Range Strategy, therefore, belong in two categories: (1) those goals and objectives which address the Assurances as State Plan Requirements and whose implementation are essential to the continued compliance by the State with the law and regulations; and (2) goals and objectives designed to further expand, extend and strengthen the child welfare services program in the State but whose implementation, while a concern of the Children's Bureau, will not be monitored with a view to compliance.

The proposed regulation includes a provision that expressly applies 45 CFR Part 74 termination procedures in a case of State noncompliance with the State plan requirements. It is anticipated that the Department will not invoke this authority unless the issue cannot be resolved through the joint planning process.

I. Payments to Indian Tribal Organizations

Pub. L. 96-272 gives the Secretary discretion to decide whether a program of direct grants to Indian tribal organizations should be established, which Indian tribal organizations should be funded directly, and under what circumstances direct payments should be made.

The Department believes that direct funding of Indian tribes will strengthen the tribal child welfare services programs consistent with the goals and requirements of Pub. L. 96-272. In the legislative history to Pub. L. 96-272 (Congressional Record, June 13, 1980, S. 6944), Senator Cranston indicated that direct funding was included in the legislation because jurisdictional and other problems sometimes caused Indian communities to be left out of social service programs funded through State agencies. The proposed rule will permit tribes meeting the eligibility requirements to apply directly to the Federal government for their share of the IV-B funds (totalling approximately $1.08 million for all tribes). Tribes not applying for direct grants may continue to apply to the State for their share of IV-B funds. The Department believes that eligible Indian tribes should receive their proportionate share of the IV-B allocation, that the principle is important and is affirmed by the Indian Self-Determination Act (Pub. L. 93-638) and other Federal programs. The Department recognizes that many tribes may choose not to apply for direct funding for various reasons. For example, the tribe may consider the money available too small to warrant application; the tribe may have

established a productive IV-B program relationship with the State; or the tribe may determine that fewer services are available under direct grants than under a State's regular IV-B program. The Department is also aware that direct funding may cause preliminary adjustments in the working relationships between States and tribes. (However, States will not be relieved of their responsibility under other Federal programs and under the Constitution to serve Indians in a non-discriminatory manner.) The decision to permit funding of eligible Indian tribes was reached after weighing these and other factors, and ultimately determining that Indian tribes should have the right to apply for their own IV-B funds.

In determining which Indian tribal organization will be eligible for direct funding, the Department decided to make the option of applying for direct funding available to those Indian tribal organizations which have contracted under Pub. L. 93-638 (Indian Self-Determination Act) for child welfare services provided under 25 U.S.C. 13 (25 CFR 20). This proposed regulation addresses the concern expressed about the lack of services to Indians by permitting direct funding to Indian tribal organizations that have established the need for child welfare services and have taken advantage of the opportunity for direct management and operation of child welfare services. Under this approach, direct grants will be added to existing, ongoing Indian child welfare programs operated by the tribes. The IV-B funds will be linked to the major Indian Federal social services program, will support Indian self-determination, and will complement the provisions of the Indian Child Welfare Act of 1978 (Pub. L. 95-608). This is important since IV-B funds alone are insufficient for an Indian tribe to establish and operate a basic child welfare services program. Aggregating funds from different Federal sources to intensify their impact is consistent with the thrust of the IV-B law which promotes progressive, comprehensive, quality child welfare services to children and families.

The Department considered other options for determining tribal eligibility to receive direct grants. One option, relating eligibility to a minimum number of children in each tribe, was rejected as arbitrary and lacking in programmatic justification. A second option established eligibility criteria based on management capability and adherence to specific IV-B requirements. This option was rejected as duplicative of the developmental and capacity-building resources currently available through other programs such as title II of the Indian Child Welfare Act (Pub. L. 95-608) and the Native American Programs Act of 1974 (Pub. L. 93-644 as amended).

In determining the amount of direct funding that would be available to an Indian tribal organization eligible under this provision, in the interests of equity, the Secretary, will apply a formula similar to the one used to calculate State title IV-B allotments. This formula takes into consideration the Indian tribe's resident population under 21 and its per capita income.

Because current per capita income figures for Indian tribes are not available and most Indian tribes have very low per capita income similar to the Territories, a maximum allotment percentage of 70.0 per centum, the same per centum used for the territorial IV-B allotments, has been used.

For the balance of a State's population, excluding tribal population, the per capita income is estimated to be slightly higher than the State's average per capita income for the entire population. This results in an allotment percentage of 46.7 per centum for the balance of the State excluding the Indian tribes.

Using these allotment percentages to calculate an Indian tribal organization's allotment results in an amount which bears approximately the same ratio to the total State's IV-B allotment as the product of 1.5 and the proportion of the Indian tribe's resident population under 21 bears to the State's total population under 21.

This provision does not affect funding under titles IV-A, IV-E and XX of the Social Security Act. Other funding allocation options were considered and rejected as unsupportable by the intent of the law.

The Department has proposed to begin direct funding in the first quarter of Fiscal Year 1982. Implementation of this provision must follow publication of this proposed rule in final form: The 1982 FY date will give eligible tribes, who choose to apply, the necessary lead time to develop child welfare plans.

Each eligible Indian tribal organization or consortium applying for direct IV-B grants will be required to submit a child welfare services plan that has been developed jointly by Federal and Indian tribal organization representatives. Although the requirements in the jointly developed plan for Indian tribal organizations will differ slightly from the requirements in the State plan, the tribal organization's plan will foster the improvements in services envisioned in, and consistent with, the requirements in the law.

The plan which can be in effect for two or three years must contain the following elements: assurances that the specific requirements of the regulations are met; a long range strategy which calls for a needs analysis and goals and objectives designed to meet unmet needs; an annual operating plan; and, an annual budget request.

If eligible Indian tribal organizations applying for direct funds wish to receive their share of additional IV-B funds above $141 million, they must meet the requirements under Section 427 of the Act (Sec. 1357.30) which relate to children who have been in foster care under the responsibility of the tribe. The requirements under IV-B and additionally those related to eligibility for funds above $141 million are discussed more fully under the IV-B section of this Supplemental Information.

J. Fiscal Requirements

This section of the regulation (Sec. 1357.50) sets forth the procedures for determining each State's allotment percentage and the process for reallotment. It details the change in FFP rate from the existing individual State rate (33⅓% to 66⅔%) to 75% for each State. The section on allowable costs gives numerous examples of how title IV-B funds may be spent, but the list is not inclusive. The regulation also lists the limitation on expenditures: FFP in expenditures for foster care maintenance, day care because of employment of the parent or adoption assistance may not exceed the FY 1979 State allotment. The funds expended to meet the requirements of Section 427 (a) and (b) of the Act may definitely be charged to title IV-B. Some of them, such as case reviews for children on behalf of whom foster care payments are made under title IV-E, may be charged as IV-E administrative expenditures.

K. Provision for Advance Funding

Beginning in FY 1981, Congress is to approve the title IV-B appropriation one fiscal year in advance of the issuance of allocations to the States. Knowledge of the IV-B appropriation level a year in advance will provide States budget development lead time and will facilitate child welfare services planning. This is an important provision because it is one of the two conditions necessary for the IV-E and IV-A foster care maintenance ceiling to go into effect. The other condition necessary to trigger this ceiling is that the IV-B appropriation equal or exceed the levels specified in Pub. L. 96-272; namely: $163.55 million in FY 81; $220 million in

FY 82 and $266 million in FY 83 and FY 84.

L. Maintenance of Effort

During each phase of its deliberations on HR 3434, Congress expressed concern that if the goals of the law are to be realized, funds must be available to pay for the increased responsibilities placed on the State social service systems by the new law. In addition to taking steps to protect current State investments in services to children, youth, and families, Congress clearly indicated that any increases in IV-B appropriations would go for service systems' improvements by prohibiting the fund's use for foster care maintenance payments, employment or training related day care, and adoption assistance payments. The bill passed by the House included Federal title XX expenditures in the maintenance of effort. Not wanting to limit how States spend their title XX funds, the Senate-House Conference Committee removed expenditures under title XX from the requirement. The House Ways and Means Committee Report No. 96-136 expressed the legislative intent of the maintenance of effort provision by stating that the maintenance of effort provision was to prevent the substitution of new Federal funds for existing State expenditures.

The proposed regulation effectively excludes all donated funds and any Federal title XX expenditures from the maintenance of effort provision. States obviously cannot control the receipt of donated funds and should not be accountable for their continuation. States will be expected to determine their FY 1979 expenditure level, certify their level and have supporting information available for review.

As a condition for claiming their share of the increased title IV-B appropriation above $56.5 million, the proposed rule will require States to maintain expenditures of State and local appropriated funds for public child welfare services in fiscal year 1981 and years thereafter that are no lower than the total of those expenditures in fiscal year 1979. The maintenance of effort provision does not include expenditures for foster care maintenance payments, adoption assistance payments, and employment or work related day care. These exclusions comprised most of the child welfare service State expenditure in fiscal year 1979.

(Catalog of Federal Domestic Assistance Program No. 13.645 Child Welfare Services—State Grants)

Dated: December 22, 1980.

Cesar A. Perales,

Assistant Secretary for Human Development Services.

Approved: December 23, 1980.

Patricia Roberts Harris,

Secretary of Health and Human Services.

A. In 45 CFR, Chapter XIII, Subchapter F, Administration for Children, Youth and Families, Child Welfare Services; Foster Care Maintenance Assistance and Adoption Assistance, new Parts 1355, 1356 and 1357 are established to contain the rules for child welfare services, foster care maintenance assistance and adoption assistance programs as follows:

PART 1355—GENERAL

1355.10 Program scope.
1355.20 Definitions of terms.

PART 1356—REQUIREMENTS APPLICABLE TO TITLE IV-E

1356.10 Program scope.
1356.20 State plan requirements—general.
1356.30 Organization and administration.
1356.40 Foster Care Maintenance Program.
1356.50 Voluntary placements.
1356.60 Adoption Assistance Program.
1356.70 Plan format and approval.
1356.75 Withholding of funds for non-compliance with an approved Title IV-E State Plan.
1356.80 Fiscal requirements (IV-E).

PART 1357—REQUIREMENTS APPLICABLE TO TITLE IV-B

357.10 Program scope and definitions.
357.20 State Child Welfare Services Plan requirements under Title IV-B.
357.30 Requirements for State eligibility for additional payments.
357.40 Development of the State's Child Welfare Services Plan.
357.45 Requirements for direct payments to Indian Tribal Organizations.
357.50 Fiscal requirements (IV-B).

Authority: Adoption Assistance and Child Welfare Act of 1980, Pub. L. 96-272, 42 U.S.C. 670 et seq., 94 Stat. 501, 42 U.S.C. 620, 94 Stat. 516 et seq., Section 1102 of the Social Security Act, as amended, 42 U.S.C. 1302.

PART 1355—GENERAL

§ 1355.10 Scope.

(a) *Scope.* Parts 1355, 1356 and 1357 apply to State programs under titles IV-E and IV-B of the Social Security Act, as amended.

(b) *Purpose.* Parts 1355, 1356 and 1357 set forth the requirements which must be met to receive Federal financial participation under titles IV-E and IV-B of the Social Security Act, as amended.

(c) *Background.* The purpose of these programs and regulations are—

(1) To make needed improvements in child welfare and social services programs;

(2) To strengthen and improve the program of Federal support for foster care of needy and dependent children;

(3) To establish a program of Federal support to encourage adoptions of children with "special needs".

(4) To preserve, strengthen and rehabilitate family life in order to prevent disruption and unnecessary or precipitous removal of children from their homes;

(5) To provide preventive services through early identification of problems and provision of supportive and supplemental services to families and individual children;

(6) To protect and promote the welfare of handicapped children and all other vulnerable children;

(7) To prevent or remedy neglect, abuse, exploitation, or delinquency of children and youth;

(8) To provide children temporarily removed from their families with foster care that meets their particular needs, and to ensure the earliest possible return of children to their families;

(9) To seek an adoptive homes for eligible children including those with special needs in foster care who cannot be returned to their own homes;

(10) To provide for other permanent arrangements through legal guardianship, independent living, or planned, long-term foster care in those exceptional cases where it is appropriate;

(11) To protect the welfare of children, while respecting parental rights and responsibility for custody and guardianship, and avoiding unnecessary disruption of family relationships; and

(12) To promote effective and efficient management and delivery of services to children, youth and families.

§ 1355.20 Definition of terms.

Unless otherwise specified, the following terms as they appear in Parts 1355, 1356, and 1357 of this title are defined as follows—

(a) *The Act* means the Social Security Act, as amended.

(b) *ACYF* means the Administration for Children, Youth and Families, Office of Human Development Services, United States Department of Health and Human Services.

(c) *ASHDS* means the Assistant Secretary for Human Development Services, United States Department of Health and Human Services.

(d) *Child care institution* means a licensed or approved public residential child care facility that accommodates no more than 25 children, or a private, nonprofit residential child care facility that is licensed or approved, by the agency of the State responsible for

licensing or approval of institutions of this type, (or with respect to child care institutions on Indian reservations, by an Indian Tribal Council as defined in Section 1396.1 of this title), as meeting the standards established for licensing. Group homes are included in the term if they are licensed or approved as meeting licensing standards by the State as a child care facility. The term shall not include correctional facilities, forestry camps, training schools or any other facility operated primarily for the detention, care, or treatment of children who have been found or are alleged to be juvenile delinquents.

(e) *Commissioner* means the Commissioner, Administration for Children, Youth and Families (ACYF), Office of Human Development Services, United States Department of Health and Human Services.

(f) *DHHS* means the United States Department of Health and Human Services.

(g) *Family* means persons related by blood, adoption or marriage, including siblings, cousins, aunts, uncles, grandparents and relatives in-law.

(h) *Foster care* means 24-hour, out-of-home care provided in a licensed or approved foster family home, group home, or child care institution.

(i) *Foster family home* means the home of an individual or family licensed or approved by the State licensing authority(ies) (or with respect to foster family homes on Indian reservations, by an Indian Tribal Council as defined in Section 1396.1 of this titles), that provides 24-hour out-of-home care for children. The term may include group homes if they are licensed or approved by the State as foster homes.

(j) *Initiation of court proceedings* means the point at which a petition or other legal document seeking removal of a child from his or her home is filed with a court of competent jurisdiction.

(k) *OHDS* means the Office of Human Development Services, United States Department of Health and Human Services.

(l) *Parents* means biological or adoptive parents or legal guardians, as determined by applicable State law.

(m) *Regional Administrator (RA)* means the Regional Administrator of Human Development Services, United States Department of Health and Human Services.

(n) *Regional Programs Director (RPD)* means the Regional Program Director, Administration for Children, Youth and Families.

(o) *State agency* means the State agency administering or supervising the administration of the title IV-B and IV-E State plans.

(p) *State* means each of the 50 States, the District of Columbia, the Commonwealth of Puerto Rico, Guam, the Virgin Islands and the Commonwealth of the Northern Mariana Islands.

(q) Secretary means the Secretary of Health and Human Services, United States Department of Health and Human Services.

PART 1356—REQUIREMENTS APPLICABLE TO TITLE IV-E

§ 1356.10 Program scope.

These regulations apply to State programs for foster care maintenance payments, adoption assistance payments and related administrative expenditures under title IV-E of the Act.

§ 1356.20 State plan requirements—general.

A State plan for foster care and adoption assistance must provide that the requirements of the following sections are met:

- Section 1356.30
- Section 1356.40
- Section 1356.50
- Section 1356.60
- Section 1356.70
- Section 1356.80

§ 1356.30 Organization and administration.

(a) *Designation of a State Agency.* The State plan shall provide for designation of a State agency by the Chief Executive Officer of the State or as otherwise provided by State law that will have authority to administer or supervise the administration of the State's program for foster care maintenance payments and adoption assistance.

(1) The State agency designated to administer or supervise the administration of the foster care and adoption assistance program under title IV-E shall be the same agency that administers or supervises the administration of the State's title IV-B program.

(b) *Plan in Effect Statewide.* The State plan shall be in effect in all political subdivisions of the State and, if administered by the political subdivisions, shall be mandatory upon them.

(c) *Monitoring and Evaluation.* The State plan shall provide for monitoring and periodic evaluation of the implementation of the programs and activities conducted under title IV-E which shall include—

(1) Annual review of valid statistically selected samples of case records of individual services recipients to ensure that the requirements of Section 1356.40 and 1356.50 are met as they apply in each case;

(2) Review and evaluation of other Federal requirements under this Part no less frequently than once every three years and a description of the methods to be used and the schedule to be followed;

(3) The reviews and evaluations shall be documented and supporting documentation shall be available for inspection and duplication by ACYF, DHHS, other Federal staff or the appropriate committees and staff of Congress.

(d) *Coordination of Services.* (1) The State plan shall assure coordination of services between titles IV-A, IV-B, IV-D, IV-E, XIX and XX and any other appropriate Federal or State program to ensure maximum availability and utilization of resources that promote and enhance the welfare of children, youth, and families served under titles IV-B and IV-E.

(2) The State plan shall provide for procedures that will ensure coordination of services including—

(i) An assessment of the relevance and appropriateness of other programs and services to the needs of children and their families;

(ii) Provision of information to local agencies on the relevance and availability of related programs and services;

(iii) Establishment of policies and procedures to facilitate referrals at the local level;

(iv) Periodic assessment of the effectiveness of the State agency's arrangements for coordination of program services and activities;

(e) *Reporting Child Abuse and Neglect.* The State plan shall provide that the State agency has procedures to ensure that employees and other public and private service providers of any State agency who have reason to believe that the health or well-being of a child is harmed or threatened with harm shall bring the condition to the attention of the appropriate court or law enforcement agency, as well as to the State agency mandated to receive reports. The procedures shall apply to all children whose care is funded in whole or in part under title IV-E or IV-B of the Act whose home or institution is unsuitable due to suspected neglect, abuse or exploitation as defined in Section 1340 of this title, Child Abuse and Neglect.

(f) *Safeguarding Information.* The State plan shall provide for the establishment and maintenance of methods to safeguard the use and disclosure of information with respect to persons applying for or receiving foster

care maintenance and adoption assistance, or child welfare services. The provisions of Section 1391.3 of this title, Safeguarding Information for Social Services Programs, shall be applicable to programs and activities funded under title IV-E. For the purposes of this paragraph, Section 1391.3, of this title, shall also apply to disclosure of information for purposes directly related to the administration of State plans approved under title V of the Act.

(1) Nothing contained in these regulations or the methods, provisions, or rules developed by the State shall be used to restrict the Federal government's access to statistical data which in the judgment of the Secretary, his/her designee, or the appropriate Committees of Congress, are necessary to the proper and efficient administration and supervision of these programs.

(2) A State may establish standards which restrict disclosure of information other than statistical data to purposes more limited than those specified in these regulations, or which, in the case of adoption, may prevent disclosure entirely.

(g) *Appeals, Fair Hearings and Grievances.* (1) The State plan shall provide for a system for fair hearings, appeals and grievances and the methods of informing applicants and recipients of their rights under the system.

(2) The State's system for fair hearings and appeals shall provide a process under which applicants and recipients, or someone acting on their behalf, may appeal denial, reduction, or termination of service(s) or benefit(s) or the failure of the State agency to act on a request for services or benefits with reasonable promptness. For purpose of this paragraph, the provisions of Section 205.10 of this title, Hearings, shall apply.

(3) There shall also be a system through which recipients of service(s) or benefit(s) may present grievances to the State agency about the operation of a service or benefit program.

(h) *Program Manuals and Policy Issuances.* The State plan shall provide that program manuals and other policy issuances that affect the public, including regulations governing client rights and responsibilities, are maintained in the State office and each local office for review, study or reproduction by individuals, upon request, on regular workdays during regular work hours.

(i) *Reports and Evaluations.* The State shall submit statistical reports and participate in such evaluations as the Secretary may require with respect to children for whom payments are made. The reports shall be in a form specified by the Secretary, or his/her designee. The State agency shall comply with any provisions established by the Secretary needed to ensure the correctness and verification of these reports.

(j) *Audits.* The State plan shall provide for audits of the programs assisted under title IV-E no less frequently than once every three years and conducted in accordance with standards and procedures as the Secretary may require.

(k) *Personnel Standards.* The State plan shall provide for use of methods relating to the establishment and maintenance of a personnel system on a merit basis in accordance with Federal standards and procedures as the Secretary may require.

(1) *General Requirements.* The following DHHS regulations are applicable to programs funded under title IV-E—

45 CFR Part 16—DHHS Grant Appeals Process.
45 CFR Part 74—Administration of Grants.
45 CFR Part 80—Civil Rights.
45 CFR Part 81—Practice and Procedures for Hearings Under Part 80.
45 CFR Part 84—Non-discrimination on the Basis of Handicap.
45 CFR Part 91—Non-discrimination on the Basis of Age in DHHS Programs and Activities Receiving Federal Financial Assistance (when issued).
45 CFR 1396.53—Restriction on State's share in claiming FFP.

§ 1356.40 Foster Care Maintenance Program.

(a) *Application of Eligibility Criteria.* The plan shall provide for foster care maintenance payments on behalf of a child who would meet the definition of Section 406(a) or 407 of the Act but for his or her removal from the home of a relative specified in Section 406(a) of the Act, if:

(1) The removal was the result of a judicial determination that the child's continued residence in the home would be contrary to his or her welfare; or

(2) The child's removal from the home was the result of a voluntary placement agreement entered into (after September 30, 1980 and before October 1, 1983) by the child's parent(s); and

(3) The child's placement and care are the responsibility of the State agency administering or supervising the administration of the State plan; or any other public agency with which the State agency administering or supervising the administration of the State plan approved as meeting the requirements of Section 1356.20 has made an agreement which is still in effect; and

(4) The child received assistance under the State plan approved under title IV-A (AFDC) of the Act in or for the month in which the voluntary agreement was entered into or judicial proceedings leading to the removal of the child from the home were initiated; or the child would have received assistance under AFDC in or for that month if an application had been made; or the child had been living with a relative specified in Section 406(a) of the Act within six months prior to the month the judicial proceedings were initiated or voluntary agreement entered into and would have received AFDC in or for that month if in that month he or she had been living with such relative and an application for AFDC had been made; and

(5) The child has been placed in a licensed or approved foster family home or a child care institution as a result of a voluntary placement agreement or judicial determination referred to in paragraphs (1) and (2) of this Section.

(6) Effective October 1, 1983, reasonable efforts have been made to prevent removal from the home and to make return possible.

(b) *Foster Care Maintenance Payments.* (1) The State plan must provide—

(i) a Statewide standard for foster care rates, expressed in money amounts, to be used in determining the amount of the foster care payment, and to be applied uniformly throughout the State; and

(ii) the method used in determining the amount of the foster care payment; and

(iii) for taking into consideration the income available to the child in determining the amount of the foster care maintenance payment.

(2) Foster care maintenance payments shall be made only on behalf of an eligible child who is placed in a foster family home or a child care institution, whether the payments are made directly to the foster parent(s) or the child care institution or to a public or non-profit private child placement or child care agency.

(3) Federal financial participation is available for allowable costs in foster care maintenance payments to cover the cost of (and the cost of providing) food, clothing, shelter, daily supervision, school supplies, a child's personal incidentals, liability insurance with respect to a child, and reasonable travel to the child's home for visitation. In the case of child care institutions, payments shall also include the reasonable cost of administration and operation that are necessarily required to provide the items described in this paragraph.

(4) For purposes of determining eligibility (initial and continuing) and the income and resources of the child, the State's procedures under the State's approved title IV–A plan shall apply.

(c) *Eligibility for Other Services.* For purposes of eligibility for services under title XIX and title XX, a child eligible for foster care maintenance payments under title IV–E shall be considered to be a dependent child as defined in Section 406 of the Act and shall be considered to be a recipient of AFDC under title IV–A of the Act.

(d) *Case Review System.* The State agency shall develop and implement a case review system that shall ensure, for each child receiving foster care maintenance payments under the State title IV–E plan, a case plan, periodic review of the child's status, and procedural safeguards regarding the rights of the child and the parent(s).

(1) *Definition of Terms.* (i) *Appropriate Notice to the Child* means written notice or person-to-person discussion that takes into account the child's ability to understand what is being conveyed without raising excessive anxiety or fear.

(ii) *Child of Appropriate Age* means that the child is able to understand the circumstances and implications of the situation in which he or she is involved and is able to participate in the decision or process without excessive anxiety or fear.

(iii) *Close Proximity to Parent(s) Home* means a placement nearest the home community or residence of the child's parent(s) or legal guardian(s) that is consistent with the child's best interest and special needs. Factors to be considered include ease with which the child, his or her parent(s) and family may visit each other and the availability of services the child may require.

(iv) *Determining the Continuing Necessity and Appropriateness of Placement* means an assessment of the conditions in the child's own home to determine whether the child should return home. If the review of the home indicates that continued foster care is required, the assessment shall also include a determination of whether the placement and the services provided are appropriate to the child's needs and whether the service goals in the case plan are still appropriate.

(v) *Placement in the Least Restrictive Setting* means the most family-like setting that can provide the environment and services needed to serve the child's best interests and special needs. In order of consideration, this means placement with relative(s), tribal member(s), foster family care, group home care and institutional care.

(2) *Case Plan.*—(i) The State agency shall develop written policies and appropriate procedures to be in effect throughout the State which will assure that children will be placed in the least restrictive setting available and in close proximity to the parent(s)' or family home, consistent with the best interests and special needs of the child. The State agency shall develop a Statewide procedure for approving out-of-State placements or placements beyond a specified distance from the child's home.

(ii) The case plan shall be a separate, identifiable written document which includes for each child a relevant history and diagnostic assessment, sets goals, and describes significant transactions involving the child, including, after October 1, 1983, the services which were offered or provided to prevent removal from the home prior to placement.

(iii) The case plan shall be developed within a 30 day period, starting at the time the agency assumes responsibility for providing services or placing the child, and shall include at a minimum—

(A) After October 1, 1983 a description of the services offered or provided which were intended to help the child remain with his family;

(B) A description of the type of home or institution in which the child is to be placed;

(C) A justification of appropriateness of placement that discusses the child's best interests and any special needs, and whether the placement is in the least restrictive setting available and in the closest proximity to the parent(s)' home; and

(D) A statement of all requirements of the court at the time of judicial determination or recommendations of the administrative review panel and a discussion of how the agency responsible for the child's care will meet the requirements and recommendations.

(E) An analysis of the circumstances that necessitated the placement and the improvements required for the child's return to his or her home.

(F) A statement of the goals, developed in consultation with the child and his family, to be achieved during the period of placement, a description of the services to be provided to the child, the child's parent(s), and family, and a discussion of the appropriateness of these services in meeting the goals and the child's special needs, if any;

(G) A statement of the agency's plan for assuring that the child receives proper care while in the foster home or institution including services to the foster parent(s) to facilitate and support the child's adjustment, and that services are provided to the parent(s), child and other appropriate family members in order to improve the conditions in the parent(s)' home;

(H) An estimated date by which a decision will be made to return the child to his or her parent(s) or family, or to seek an alternative permanent placement including adoption;

(I) A description of the extent to which the child, if of appropriate age, the parent(s) or other relatives participated in the development of the case plan.

(J) Where long term foster care is determined to be the plan for the child's future, the responsible agency shall include a statement in the case plan of the special needs or circumstances that would not allow the child to be returned home or placed for adoption, and shall specify the efforts that were made to place the child with parent(s) or other family or in adoption.

(K) All parties to the development of the case plan, including the child of appropriate age, his or her parent(s) or other relative(s), shall receive a copy of the plan, which will include, whenever possible, signature(s) indicating that they have read and understood the plan.

(L) The case record shall contain a continuing, updated notation of the results of each court and administrative action or review affecting the child, and significant agency actions, services, or encounters relative to the case plan.

(3) *Periodic Review.*—The case review system shall provide for a review of the status of each child no less frequently than once every six months by a court, or by an administrative review. The periodic review shall include—

(i) A determination of the continuing necessity for and appropriateness of the child's placement;

(ii) A discussion of the extent to which all parties have complied with the case plan and achieved the goals described in the plan;

(iii) A summary of progress toward alleviating or mitigating the circumstances necessitating placement; and

(iv) A target date by which the child may be returned home or placed for adoption, legal guardianship or other permanent placement.

(4) *Administrative Review.*—(i) When the periodic review is an administrative review it shall be conducted by a panel of appropriate persons, at least one of whom is not a part of the direct line of supervision in the delivery of services to the child or parent(s) being reviewed. The review panel may include agency staff, staff of other agencies, officers of the court and citizens qualified by

experience, professional background or training.

(ii) Members of the administrative review panel shall receive instructions which will enable them to understand the review process and their roles as participants.

(iii) The administrative review shall be open to the participation of the parent(s) and the child, if of appropriate age, and may include the foster parents. The agency shall develop methods and procedures for assuring that written notice will be sent to the child's parent(s) two weeks prior to the review, notifying them of the date and location of the review, and the rights of parent(s) and the child to be accompanied by a representative of their choice.

(iv) Following the review, a written statement of the conclusions and recommendations shall be made available to all participants in the review, subject to agency safeguards relative to the confidentiality of information.

(5) *Dispositional Hearings.*—(i) The case review system shall require a dispositional hearing for each child no later than 18 months after placement; and shall have additional dispositional hearing(s) annually thereafter, unless otherwise determined by a court of competent jurisdiction.

(ii) The dispositional hearing shall he held by a family, juvenile or other court of competent jurisdiction, including a tribal court, or by an administrative body appointed or approved by the court.

(iii) The hearing shall determine the child's future status, including whether—

(A) The child should be returned to his or her parent(s) or other family member(s);

(B) The child should be continued in foster care for a specified period;

(C) The child should be placed for adoption or legal guardianship; or

(D) The child, because of exceptional circumstances, should remain in foster care on a long term basis as a permanent plan or with a goal of independent living.

(6) *Procedural Safeguards for the Rights of Parents and Child.*—(i) Procedural safeguards shall be applied with respect to the rights of parent(s), family and child pertaining to—

(A) Removal of the child from the home of his or her parent(s) or other family members;

(B) Any change in the child's foster care placement; and

(C) Any determination affecting the visitation arrangements of the parent(s) or other family member(s).

(ii) Procedural safeguards shall include—

(A) Prior written notice to the parent(s) or relative(s) with whom the child is living of the agency's intent to petition the court to remove a child from the home of his or her parent(s) or other family members. Notice shall be provided two weeks in advance of the intended action and shall specify the nature of the hearing; how counsel may be obtained; the right to written findings from the hearings and how they may be obtained; and the right to appeal. The State shall have a method of verifying that the parent(s) or family received the notice. This prior notice requirement will apply to all court proceedings with regard to neglect, dependency or termination of parental rights unless the child's health or well-being would be endangered if prior notice were given.

(B) A method of ensuring that notice of the intent to petition the court to remove the child from the home or to terminate parental rights is given in the language of the family and is given orally if there are indications that the parent does not read.

(C) Written notice of any intended change in placement or visitation agreement. The notice shall be sent to the parent(s) or family two weeks in advance of the change, with a statement advising them of their right to object, unless the child's health or well-being is endangered by delaying the action or would be endangered if prior notice were given;

(D) Procedures which shall ensure review of the parent(s) objection(s) and provide for a discussion of the proposed change with the parent(s); and

(E) Appropriate notice to the child of the intended change in placement or visitation arrangement, given two weeks in advance of the change, unless the child's health or well-being is endangered by delaying the action or would be endangered if prior notice were given.

(e) *Efforts to Prevent Removal from the Home and to Reunify Families.*—By October 1, 1983 the State agency shall develop and implement policies and procedures to ensure that in each case reasonable efforts shall be made to provide the services described in Section 1357.30(b)(4) to prevent or eliminate the need for removal of a child from his or her own home and to provide the services described in Section 1357.30(a)(5) to make it possible for each child in foster care to return to his or her own home.

(f) *Establishment of Specific Foster Care Goals.*—(1) On or before October 1, 1982, the State shall enact a statute that provides specific goals for reducing the number of children receiving assistance under title IV-E who will be in foster care more than 24 months.

(i) goals shall be set for each fiscal year, beginning with the fiscal year that starts on October 1, 1983;

(ii) the goals shall be stated in absolute number of children in foster care or as a percentage of all children for whom assistance is provided during the year, and shall apply to children who at any time during the year will have been in foster care for a period in excess of 24 months.

(2) The State Plan shall contain a description of the steps the State will take to achieve its foster care goals.

(g) *Placements Outside the State.*—If a child is in foster care outside the State, the State agency shall retain responsibility for foster care payments, and for services under titles XIX and XX of the Act, and for ensuring that protections under the case plan, case review and reunification procedures are provided, until—

(1) The State agency has been relieved of its responsibility by court action; or

(2) A voluntary agreement has expired or has been revoked; or

(3) The date that the receiving state indicates that it will begin payments and services.

(h) *Standards for Foster Care Homes and Child Care Institutions.*—(1) The State shall establish and maintain Statewide standards for foster family homes and child care institutions receiving funds under titles IV-E and IV-B. These standards shall be reasonably in accord with recommended standards of national standard-setting organizations.

(2) The State shall identify the particular national standards, or a combination of national standards, with which its standards are reasonably in accord.

(i) The standards for foster family homes established by the following national organizations shall be used in the development of State standards—

(A) American Public Welfare Association; or

(B) Child Welfare League of America.

(ii) The standards for child care institutions established by the following national organizations shall be used in the development of State standards—

(A) Child Welfare League of America;

(B) National Association of Homes for Children;

(C) Council on Accreditation Services for Families and Children, Inc.;

(D) Interstate Consortium on Residential Care for Children; or

(E) Joint Commission on Accreditation of Hospitals.

(3) The State standards shall be incorporated into State licensing or approval requirements for foster family homes private child care institutions, and for manuals for State-administered child care institutions as appropriate.

(4) Licensing requirements established for foster family homes shall cover, at a minimum, the following areas—

(i) Character, physical and emotional health, and financial status, of the foster families;

(ii) Maximum number of children per home, including the maximum number of children under the age of two;

(iii) Participation of foster parent(s) in case planning when requested by the agency; and

(iv) Participation of foster parent(s) in available training deemed appropriate by the agency.

(5) Licensing requirements established for child care institutions shall cover, at a minimum, the following areas—

(i) Organization, administration, and financial management;

(ii) Policies for admission, personnel, and operation;

(iii) Case recordkeeping;

(iv) Treatment plans;

(v) Services which provide for the child's developmental, social, and educational needs;

(vi) Policies and procedures for assisting permanency planning for children;

(vii) Coordination of the child's treatment plan with services provided to family;

(viii) Education and experience qualifications of administrative, social work and child care staff;

(ix) Staff-child ratio;

(x) Physical plant and equipment safety; and

(xi) Health care.

(6) The State licensing or approval requirements shall provide for sanctions for failure to comply with the requirements by a licensed or approved facility.

(i) *Review of State Standards.*—The State agency shall conduct a review of its standards for child care institutions and foster family homes no less frequently than once every three years to assure their continuing appropriateness to the child care setting and to the service needs of children.

(j) *Review of Foster Care Maintenance Payments.*—The amount of the State's payments for foster care maintenance payments shall be reviewed no less frequently than once every two years to ensure their continuing appropriateness. The review shall include an examination of the costs of maintaining a child in foster care and the criteria for setting rates for foster care maintenance payments.

(k) *Public Participation in Review of State Standards and Payment.*—The method of review of the State's standards for child care institutions and foster family homes, and for review of the payment systems shall be developed by the State agency. However, there shall be public participation in the review so that, at a minimum, representatives of the following groups shall have an opportunity to participate—

(1) Advisory Boards;

(2) Foster parent(s);

(3) Child care institutions;

(4) Other public and private child welfare, human services and advocacy organizations; and

(5) Parent(s) of children for whom foster care has been, or is being, provided.

§ 1356.50 Voluntary placements.

(a) Federal financial participation is available for allowable costs in expenditures made after September 30, 1980 and before October 1, 1983, when the requirements of this Section, Sections 1356.40(a) and 1357.30(b) are met for foster care maintenance payments and adoption assistance payments made for a dependent child removed from his or her home pursuant to a voluntary placement agreement.

(b) Federal financial participation is limited to expenditures made within the first 180 days of voluntary placement unless there has been a judicial determination by a court of competent jurisdiction within the first 180 days of placement to the effect that the continued voluntary placement is in the best interests of the child.

(c) *Definitions.*—(1) *Voluntary Placement* means an out-of-home placement of a minor, by or with the participation of a State agency, after parent(s) of a minor have requested the assistance of the agency and signed a voluntary placement agreement.

(2) *Voluntary Placement Agreement* means an executed written agreement, binding on all parties, between the State agency or another agency authorized to execute voluntary placement agreement(s) and the parent(s) of a child. The agreement shall specify at a minimum the legal status of the child; the rights, obligations, and responsibilities of the parent(s) the child, and the placing agency while the child is in placement; and the conditions under which the agreement may be terminated by the parent(s).

(d) *Certain Voluntarily Placed Children.*—Federal financial participation is available for allowable costs in expenditures for foster care maintenance payments for children who were voluntarily removed from the home of a relative prior to October 1, 1978 if—

(1) There was a judicial determination prior to October 1, 1978, to the effect that continuation therein would be contrary to the welfare of the child; and

(2) The child is found to be in need of foster care.

Each such child is considered to have been removed as a result of judicial determination if and from the date that a case plan meeting the requirements of Section 1356.40(d)(2) and a case review meeting the requirements of Section 1356.40(d) have been made for each child. The date of the voluntary removal shall be deemed to be the date on which court proceedings were initiated which led to the child's removal.

(e) *Voluntary Placement Agreement.*—Upon request of the parent(s) or legal guardian(s) and after the State agency has determined that a voluntary placement would be in the best interests of the child, a written agreement, binding on all parties, shall be executed between the child's parent(s) and the State agency (or another agency acting on its behalf).

(f) *Revocation of the Voluntary Placement Agreement.*—(1) In order to request return of a child placed under a voluntary placement agreement, the parent(s) of the child shall give written notice to the agency at least five (5) working days in advance of the effective date.

(2) The Voluntary Placement Agreement shall be considered to be revoked on the effective date of the request unless the State agency has obtained a judicial determination under applicable State law that return to the home would be contrary to the child's best interest.

§ 1356.60 Adoption Assistance Program.

(a) *Eligibility Criteria.*—Adoption assistance payments shall be made under an adoption assistance agreement to adoptive parents who, after the effective date of the title IV-E State Plan, adopt a child—

(1) Who at the time adoption proceedings were initiated, met the requirements of Section 406(a) or Section 407 of the Act or would have met those requirements except for his removal from the home of a relative (specified in Section 406(a)) as a result of judicial determination to the effect that continuation therein would be contrary to the welfare of that child, or under a voluntary placement agreement entered into after September 30, 1980 and before October 1, 1983; and

(2) Who received aid under the State plan approved under Section 402 of the Act in or for the month in which court proceedings leading to the removal of that child from the home were initiated; or would have received the aid in or for that month if application for the aid had been made; or had been living with a relative specified in Section 406(a) of the Act, within six months prior to the month in which the proceedings were initiated, and would have received the aid in or for that month if in that month he had been living with a specified relative and application for the aid had been made; and

(3) With respect to whom a determination has been made that the child cannot or should not return to his parent(s); and

(4) Who is determined by the State to be a child with special needs.

(i) *Child with Special Needs* means a child whom the State has determined has specific factor(s) or condition(s) such as ethnic background, age, minority or sibling group membership, medical conditions, or physical, mental or emotional handicaps that would make unassisted adoption unlikely; and

(ii) For whom reasonable, but unsuccessful, efforts to place without adoption assistance have been made, unless the best interests of the child would not be served by such efforts, as in the case of a child who has significant emotional ties to prospective adoptive parent(s) while in the care of such parent(s) as a foster child.

(5) Who meets all the requirements of title XVI of the Act with respect to eligibility for Supplemental Security Income benefits and paragraphs (3) and (4) of this subsection.

(b) *Adoption Assistance Agreement.*—(1) A written adoption assistance agreement binding on the parties to the agreement between the State agency, other relevant agencies, and the prospective adoptive parent(s), must be in effect for any child for whom adoption assistance payments are made. The agreement shall be signed and in effect prior to the final decree of adoption. A copy of the signed agreement shall be given to each party.

(2) For the purposes of eligibility for services under titles XIX and XX of the Act, a child for whom adoption assistance payments are made under title IV-E shall be considered to be a dependent child as defined in Section 406 of the Act and shall be considered to be a recipient of AFDC under title IV-A of the Act.

(3) The agreement shall specify, at a minimum—

(i) The amount of assistance payments;

(ii) The additional assistance or services to be provided by the State, and how the costs for these items are to be met;

(iii) The duration of the agreement;

(iv) The process for recertification and that failure to recertify will result in termination of the agreement (see paragraph (f) of this section, Recertification);

(v) That the child is eligible for benefits and services under the State's title XIX and title XX of the Act;

(vi) How adoptive parent(s) shall notify the agency of changes in the needs of the child or circumstances of the adoptive family that would affect the eligibility for, or amount of, adoption assistance payments;

(vii) How adoptive parent(s) shall be notified or any changes in the rates of adoption assistance payments and how they may request changes in the adoption assistance agreement;

(viii) Whether the adoption assistance agreement remains in effect if the adoptive parent(s) move out of State; and

(ix) Contain provisions for the protection of the interests of the child in cases where the adoptive parent(s) and child move to another State while the agreement is effective.

(4) Effective with respect to agreements entered into on or after October 1, 1983, the adoption assistance agreement shall remain in effect regardless of the State in which the adoptive family resides.

(c) *Adoption Assistance Payments.*—(1) There shall be no income eligibility requirement (means test) for the prospective adoptive parent(s) in determining eligibility for adoption assistance payments.

(2) The amount of the adoption assistance payments—

(i) Shall not exceed the foster care maintenance payment levels for that child if he or she were in a foster family home;

(ii) Shall be based upon the needs of the child and the circumstances of the adoptive family; and

(iii) Shall be determined by agreement between the prospective adoptive parent(s) and the State agency.

(3) Payment shall begin after final decree of adoption or from the date of an interlocutory decree.

(i) *Interlocutory decree* means a court order granting legal custody or guardianship to the adoptive petitioners prior to the final decree of adoption.

(4) Adjustments in payments may be made only with the concurrence of the adoptive parent(s) and may be based upon changes in the needs of the child, the circumstances of the adoptive family or changes in the adoption assistance payment rate.

(d) *Termination of Adoption Assistance Payments.*—(1) No payments shall be made to adoptive parents—

(i) For any child who reaches the age of 18 (or 21, if the State determines that the child has a mental or physical handicap that warrants continuation); or

(ii) If the State determines that the adoptive parent(s) are no longer legally responsible for the support of the child; or

(iii) If the State determines that the child is no longer receiving any support from the adoptive family.

(e) *Review of Adoption Assistance Payments.*—(1) The State's system of adoption assistance payments shall be reviewed no less frequently than once every two years to ensure their continuing appropriateness.

(2) There shall be public participation in the review that shall involve, at a minimum, representatives of the following groups—

(i) Advisory Boards;

(ii) Adoptive parents; and

(iii) Public and private child welfare, human services and advocacy organizations.

(f) *Recertification.*—The State agency shall develop a process for annual recertification of adoption assistance agreements to determine whether changes in the needs of the child or the circumstances of the family affect eligibility for, or amount of, adoption assistance payments. The process of recertification shall ensure:

(1) That written notice of the recertification requirement is given to the adoptive parent(s) no less than 60 days prior to the anniversary date of the adoption assistance agreement;

(2) that assistance will not be terminated without a legally sufficient second notice to the adoptive parents, and

(3) that the adoptive parents are aware that termination of adoption assistance will result from failure to recertify.

(g) *Entitlement to Other Services and Benefits.*—(1) The State making the adoption assistance payment shall retain financial responsibility for services under titles XIX regardless of the child's State of residence.

(2) If an adoptive family moves to another State, they may apply for services under title XX in that State. (The child for whom an adoption assistance payment is made is eligible for title XX services as though he/she were an AFDC recipient.) However, if the needed service(s) spelled out in the adoption assistance agreement are not available, the State making the adoption

assistance payment remains financially responsible for providing the service(s).

(h) *Promotion of the Adoption Assistance Program.*—The State agency shall actively seek ways to promote the adoption assistance program, including—

(1) Distribution of written notices to local offices and private agencies with whom the State contracts for adoption services; foster parents and foster parent organizations; community-based agencies and networks including civic, social and religious organizations affiliated with the population of children who are in need of placement; caretakers for children in institutions and residential treatment centers; and other interested persons and organizations about the availability of adoption subsidies.

(2) The notice shall specify the eligibility criteria for children and describe the benefits available and the procedures through which interested persons may apply to become adoptive parents under the State's adoption assistance program.

(i) *Federal Financial Participation.*—(1) Federal financial participation may be claimed for any child adopted on or after June 17, 1980 if all other requirements of this part have been met.

(2) Federal financial participation is available for allowable costs in adoption assistance payments in accordance with a valid adoption assistance agreement and these regulations.

§ 1356.70 Plan format and approval.

(a) *General.*—(1) The State plan shall certify that the State's program will conform with the statutory requirements of title IV-E, these regulations, and other applicable DHHS issuances.

(2) The State plans for titles IV-E and IV-B of the Act may be combined for submittal to ACYF. However, the State shall clearly identify those programs and activities to be funded under title IV-E and those to be funded under title IV-B.

(b) *Plan Amendments.*—(1) The State title IV-E plan provisions shall be amended when necessary to reflect new or revised Federal statutes or regulations and court decisions. After approval of the original State Plan, all relevant changes shall be submitted to the RPD, ACYF to determine whether the State Plan continues to meet Federal requirements and policies.

(c) *Submittal of State Plans.*—(1) The State title IV-E plan shall be submitted to the Governor's Office, or his/her designated agency; for review and comment in accordance with Office of Management and Budget Circular A-95 prior to OHDS/ACYF approval.

(2) State plans (new or amendments thereto) for the title IV-E program shall be submitted to the RPD in the format and within the period set in implementing instructions.

(d) *Review and Approval of State Plans.*—(1) The ACYF Regional Program Director shall determine whether a State plan or amendment conforms to the requirements under the Act and these regulations no later than 45 days after the plan or amendment is received in the appropriate ACYF Regional Office.

(2) The effective date of a new plan or plan amendment(s) shall be no earlier than the first day of the quarter in which an approvable plan or plan amendment is submitted.

(e) *Review of State and Local Administration and Implementation.*—To provide a basis for determining that State agencies are adhering to federal requirements and to the substantive legal and administrative provisions of the State plan, ACYF will review State and local program administration and implementation. The review shall include analysis of procedures and policies of State and local agencies, examination of case records of individual services recipients and a review of supporting documentation.

§ 1356.75 Withholding of funds for non-compliance with the approved Title IV-E State Plan.

(a) A State agency shall be cited for non-compliance when it fails substantially to comply with the requirements of this Part. An issue of non-compliance exists when—

(1) A State plan which has been approved by the Regional Program Director no longer complies with the provisions of this Part.

(2) In the administration of the plan there is a substantial failure to comply with provisions of the plan; or

(3) When the State fails to amend its approved plan to conform to new federal requirements for State plans.

(b) When a determination has been made that a State agency has failed to comply with the provisions of this Part, the State shall be entitled to reasonable notice and opportunity for a hearing in accordance with the provisions of Part 213 of this title. If after such notice and hearing, a final determination is made that the State agency has failed to comply with the provisions of this Part and the plan has not been amended to conform with the requirements, the State agency shall be notified that further payments will not be made to the State under this Part, or that such payments will be reduced by the amount which the ASHDS determines appropriate, until the ASHDS is satisfied that there is no longer failure to comply.

(c) No further payments shall be made to the State, or the payment shall be reduced by the amount specified in the notification, until the noncompliance is corrected to the satisfaction of the Secretary.

§ 1356.80 Fiscal requirements (IV-E).

(a) *Payments to States for Foster Care Maintenance and Adoption Assistance.*—(1) Effective October 1, 1980, Federal financial participation is available to States with an approved State plan for allowable costs in expenditures for:

(i) Foster care maintenance payments made in accordance with this Part (subject to the limitations in paragraph (b)); and

(ii) For adoption assistance payments made in accordance with this Part.

(2) Federal financial participation is available at the rate of the Federal medical assistance percentage as defined in section 1905(b), Definitions, of the Act, and pertinent regulations as promulgated by the Secretary, or his/her designee.

(b) *Federal Matching Funds for State and Local Training for Foster Care and Adoption Assistance under Title IV-E.*

(1) Federal financial participation is available at the rate of seventy-five percent (75%) in the costs of training for foster care and for adoption assistance under the State plan under title IV-E of the Act.

(2) All training activities and costs funded under title IV-E shall be included in the State agency's training plan for title IV-B as required in Section 1357.20(c)(5).

(3) Short and long term training at educational institutions and in-service training may be provided to employees of the State agency and persons preparing for employment in the State agency in accordance with the provisions of Sections 235.63 through 235.66 of this title.

(4) Foster and adoptive parents, and staff of child care institutions providing foster care shall be eligible for short-term training at the initiation of or during their provision of care. Federal financial participation directly related to such training shall be limited to travel and per diem and the costs listed under paragraph (b) of § 235.64 of this title.

(c) *Federal Matching Funds for Other State and Local Administrative Expenditures for Foster Care and Adoption Assistance Under Title IV-E.*

Federal financial participation is available at the rate of fifty percent (50%) for administrative expenditures

(other than training) necessary for the proper and efficient administration of the State plan. To the extent that such activities may also be claimed under another federally-assisted program, the State may decide in which program costs for such activities will be claimed, subject to the regulations under 45 CFR Part 74, Administration of Grants. The State plan shall identify which categories of program-specific costs are allowable and claimed. The State shall provide assurances and adequate controls under its cost allocation plan to prevent duplicate charges for the same activities to multiple programs and to allocate costs applicable to children not covered under title IV–E to the appropriate program.

(1) The following are examples of allowable administrative costs necessary for the administration of the foster care program:

(i) Determining and redetermining eligibility;

(ii) Referral to services;

(iii) Preparation for and participation in judicial determinations;

(iv) Placement of the child;

(v) Development of the case plan;

(vi) Case reviews;

(vii) Fair hearings, appeals and grievances;

(viii) Case management and supervision;

(ix) Recruitment and licensing of foster homes and institutions; and

(x) Rate setting.

(2) Allowable administrative costs do not include the costs of social services provided to the child, family or foster family which provide counseling or treatment to ameliorate or remedy personal problems, behaviors or home conditions.

(3) Funds expended with respect to nonrecurring costs of adoption proceedings for children on behalf of whom adoption assistance is provided under the State plan may *not* be reimbursed as administrative costs under I–VE.

(d) *Other Applicable Regulations.*

The procedures in the following sections of 45 CFR shall apply:

(1) Section 201.5, Grants (execpt that ACYF shall supply appropriate forms and instructions);

(2) Section 201.6, Withholding/Reduction of FFP;

(3) Section 201.7, Judicial Review;

(4) Section 201,15, Deferral;

(5) Section 201.66, Repayment of Federal funds in installments.; and

(6) Section 205.150, Cost Allocation.

(e) *State Allotment.*

The State allotment for foster care under this Part for Fiscal Years 1981 through 1984 shall be the greater amount as determined under paragraph (1) or (2); or, at the option of the State, under paragraph (3) below. This determination is made without regard to the allotment for any prior fiscal year except as specified under paragraph (3)(iii) below. The State need not select the same option each year. The allotment is a single dollar amount, limiting Federal funds reimbursed to a State for foster care payments and related administrative expenditures (including training).

(1) The first method provides for the calculation of the base amount and adjustments for each fiscal year as follows:

(i) For Fiscal Year 1980, the State's allotment is the base amount increased by 21.2%.

(ii) For each of the Fiscal Years 1981 through 1984, the allotment for the State shall be an amount equal to the State's allotment for the preceding fiscal year, increased or decreased by twice the change (but not more than 10%) in the percentage of the Consumer Price Index, prepared by the U.S. Department of Labor, and used to determine the cost of living adjustments for Social Security benefits under Section 215(i) of the Act, Cost of Living Increases in Benefits. For this calculation, second quarter data of the preceding fiscal year shall be compared to those for the second preceding fiscal year. The arithmetic mean for the three months of the second quarter shall be used to establish the Consumer Price Index for the quarter.

(iii) The base amount in paragraph (1)(i) is calculated using the following formula:

Maintenance payments plus attributable administrative expenditures plus attributable training expenditures.

For the purposes of this formula:

(A) Maintenance payments are determined by:

(*1*) The amount of Federal funds that have been or may be paid on behalf of allowable claims for foster care maintenance payments for FY 1978 submitted to DHHS in accordance with Section 306 of Pub. L. 96–272 (94 Stat 530); and

(*2*) The amount of Federal funds that would have been paid for allowable claims on behalf or children meeting all requirements of Section 408 of the Act for FY 1978 except that the State, on a Statewide basis, did not make such payments under State law, regulation or policy solely because the foster care was provided by relative(s) of a child;

(B) *Attributable Administrative Expenditures* means State expenditures for fiscal year 1978 attributable to the performance of activities required under Section 408 of the Act for children for whom maintenance payments are included under paragraph (A)(1) and (2) above, regardless of whether payment for the administrative expenditures might have been made under Section 403 of the Act. Expenditures which may be included are limited to costs of conducting for those children: eligibility determination and redetermination, quality control, fair hearings, agency activities, judicial determination, placement, case review, case management, case supervision, rate-setting, recruitment of foster care homes and institutions, licensing and a proportionate share of general related agency overhead. The amount of these expenditures is determined: by one of the following three methods:

(*1*) By actual administrative expenditures attributable to the provision of foster care maintenance payments for Fiscal Year 1978, multiplied by 50%, if a State submits a report of these expenditures which is satisfactory to the Secretary and which is supported by documentation.

(*2*) By an amount determined by the following formula:

(*i*) The State's total AFDC administrative expenditures for fiscal year 1978 divided by State's average monthly number of AFDC cases in fiscal year 1978;

(*ii*) The result of step (*i*) multiplied by 50%;

(*iii*) The product of step (*ii*) multiplied by the average monthly number of AFDC–FC cases in Fiscal Year 1978; or

(*3*) By an amount determined as follows:

(*i*) The State's administrative expenditures (as limited in paragraph (e)(1)(iii)(B) of this section) attributable to foster care maintenance payments made under title IV–E or IV–A during a period of three or more calendar months of FY 1981 divided by the number of months in the period;

(*ii*) The result of (*1*) reduced to the comparable FY 1978 amount by use of the Implicit Price Deflator for State and Local Government Purchases (issued by the U.S. Department of Commerce);

(*iii*) The result in (*ii*) multiplied by the ratio of the average monthly number of AFDC-Foster Care cases in FY 1978 compared to the comparable number for the period used in (*i*);

(*iv*) The product in (*iii*) multiplied by 12 (for an annual amount); and

(*v*) The product in (*iv*) multiplied by 50 percent (the FFP rate in administrative expenditures).

(*vi*) The data in paragraph (*i*) need not have been or be claimed under Section 403 or 474 of the Act. They must be reported to the RPD no later than 30

days after the end of fiscal year 1981 and must be in accordance with instructions from the Commissioner.

(C) *Attributable Training Expenditures* are determined by:

(*1*) Actual training expenditures attributable to the provision of foster care maintenance payments for FY 1978 multiplied by 75%, if a State submits a report of these expenditures which is satisfactory to the Secretary and supported by documentation; or

(*2*) An amount determined by the following formula:

(*i*) The State's total AFDC training expenditures for FY 1978 divided by the State's average monthly number AFDC cases in FY 1978;

(*ii*) The result of (*i*) multiplied by 75%;

(*iii*) The product of (*ii*) multiplied by the average monthly number of AFDC-FC cases in FY 1978.

(D) *Sources of Data and Documentation.*

(*1*) All claims in this section must be submitted on forms provided by the Secretary and in accordance with the constraints of Section 306 of the Pub. L. 96-272 (94 Stat. 530).

(*2*) All reports to establish the claims which would have been allowable under sub-paragraph (iii)(A) (*2*), (iii)(B) (*1*) or (iii)(C)(*1*) of this paragraph must be submitted on forms provided by the Secretary within forty-five (45) days after the end of the second quarter of FY 1981.

(E) *Disputed Claims or Reports.*

(*1*) Only the following claims or reports in which DHHS and a State have a dispute will be included in the base amount:

(*i*) For maintenance payments, the claims submitted to DHHS in accordance with Section 306 of Pub. L. 96-272, and the reports submitted to DHHS on expenditures and reported numbers of children under paragraph (iii)(A)(*2*) of this section;

(*ii*) For attributable administrative expenditures, the dollar amount reported to DHHS in accordance with paragraph (iii)(B)(*1*);

(*iii*) For attributable training expenditures, the dollar amount reported to DHHS in accordance with paragraph (iii)(C)(*1*);

(*2*) Any claims or reported data in which a State and the Secretary have a dispute will be included in the base amount until the beginning of the fiscal year after the fiscal year in which the dispute is finally resolved by the Department. Allotments for fiscal years after resolution of the dispute will be computed using the revised base amount.

(2) Under the second method, the allotment for the State equals an amount which bears the same ratio to $100 million as the under age 18 population of that State bears to the under 18 population of the fifty States and the District of Columbia.

(3) Eligible States may select that their allotment be calculated by a third method.

(i) A State may not exercise this option unless:

(A) The percentage of the average monthly number of children in the State under 18 who received AFDC foster care maintenance payments as a proportion of all children under 18 in the State in FY 1978 was less than the corresponding national percentage for the 50 States and the District of Columbia;

(B) Beginning in FY 1982, the State's average monthly number of children under 18 who received AFDC-foster care maintenance payments compared to the State's total number of children under 18 has not exceeded the corresponding national percentage of the 50 States and the District of Columbia for Fiscal Year 1978.

(ii) Under this method, the allotment is calculated as follows:

(A) The base amount is determined by applying the provisions of paragraph (e)(1)(ii) of this section.

(B) If for any of the fiscal years 1981-1984, the percentage of children receiving foster care maintenance payments in the State under titles IV-A or IV-E of the Act exceeds the average monthly number of such children for fiscal year 1978, the base amount for that fiscal year shall be further increased by the percentage increase in the State's foster care maintenance payment caseload over its AFDC-FC case load for fiscal year 1978. This percentage increase may not exceed: for fiscal year 1981—33.1 percent; fiscal year 1982—46.4 percent; fiscal year 1983—61.1 percent; and fiscal year 1984—77.2 percent.

(C) Adjustments to the base amount for each fiscal year are made in accordance with paragraphs (e)(1) (i) and (ii) of this section.

(iii) If the State no longer meets the conditions for excercising the State option provided in subparagraph (e)(3)(i) of this section, but selected this option for the determination of its allotment for the preceding fiscal year, the allotment for the preceding fiscal year shall be used for the purpose of determining allotments for subsequent fiscal years through fiscal year 1984.

(iv) For the purpose of establishing the average monthly number of children receiving AFDC foster care maintenance payments under this section, children who, except for their placement with related persons, would have received AFDC-Foster Care under Section 408 of the Act shall be included even though they did not receive foster care maintenance payments.

(v) In the event that there is a dispute between a State and the Secretary as to the number of such children (with respect to whom foster care maintenance payments were not made) for any fiscal year, then until the beginning of the fiscal year immediately following the fiscal year in which the dispute is finally resolved by DHHS, determinations under the foregoing subparagraphs shall be made on the basis of the number of such children claimed by the State.

(vi) Interim allotments for each fiscal year shall be issued by the Secretary, or his/her designee, for States eligible under the option described in paragraph (e)(3)(i) of this section not later than six months after the beginning of the fiscal year. The interim allotments shall be based on the most recent satisfactory data then available. The final allotment shall be issued not later than nine months after the end of that fiscal year and shall be based on the most recent satisfactory data then available.

(4) The limitation on available funds imposed by the allotment will be effective only if:

(A) The appropriation under Section 420 of the Act for that fiscal year equals or exceeds the following amounts: for fiscal year 1981—$163,550,000; 1982—$220,000,000 and for fiscal years 1983 and 1984—$266,000,000; and

(B) With respect to each of the fiscal years 1982-1984, the appropriation for title IV-B under Section 420 of the Act has been made before the beginning of the fiscal year to which the limitation applies.

(5) The State shall select the method for determining its allotment no later than forty-five (45) days after the end of the second quarter of the applicable (Federal) fiscal year.

(6) *Transfer of Funds from Title IV-E to Title IV-B.*

(i) Funds available to the State within the foster care allotment for title IV-E which the State does not claim as reimbursement under title IV-E may be transferred to title IV-B and claimed by the State as reimbursement under that program only if the State has selected an allotment described under paragraphs (e)(1) or (e)(2) of this section.

(ii) If the amount transferred to title IV-B, when added to the IV-B allotment, exceeds the amount which would be allotted to the State under title IV-B if the appropriation for title IV-B equaled $141 million, the State may transfer funds under subparagraph (i) only if it

has met the requirements in Section 1357.30(a) of this title.

(iii) If the appropriation for the two previous fiscal years under Section 420 of the Act equaled $266,000,000, the State may transfer funds under subparagraph (i) only if it has met the requirements of Section 1357.30(b) of this title.

(iv) If the total reimbursement for expenditures under IV-B (including transferred funds) equalled the State's share of $266,000,000 for each of two fiscal years in which the limitation under this section did not apply, the State may not transfer funds under subparagraph (i) in any succeeding year unless the State has met the requirements of Section 1357.30(b) of this title.

(7) *Amount that may be Transferred from Title IV-E to Title IV-B.*

(i) The amount of funds that a State may transfer from title IV-E to title IV-B is:

(A) For any year in which the limitation specified under this section is in effect, the amount by which the State's title IV-E foster care allotment exceeds the FFP in State expenditures for foster care maintenance payments and administrative expenditures, including training expenditures; and

(B) For any year in which the limitation specified in this section is *not* in effect, the amount determined under paragraph (A), above, is further limited to the amount which when added to the amount the State receives under Section 420 of the Act (including all re-allotments) does not exceed the amount of the State's allotment under Section 420 of the Act if the amount described under Section 474(b)(2)(A) of the Act had been appropriated.

(ii) Transferred funds must be used to reimburse expenditures under title IV-B for the same fiscal year for which they were orginally available.

(A) The State must apply for approval of transfer of these funds to the Regional ACYF office no later than the end of the third quarter of the fiscal year in which they will be obligated.

(B) The procedures for application for funds and plans under title IV-B, including joint planning, shall apply to these funds, except as modified by the Commissioner.

(iii) A State shall operate its foster care program under its State plan continuously throughout the time the plan is in effect, regardless of whether or not it has transferred funds under paragraph (e)(7) of this section.

PART 1357—REQUIREMENTS APPLICABLE TO TITLE IV-B

§ 1357.10 Scope and definitions.

(a) *Scope.* These regulations apply to State programs for child welfare services and related administrative expenditures under title IV-B.

(b) *Definition of Terms.* (1) *Child Welfare Services* means *public* social services intended to accomplish the following purposes—

(i) Protect and promote the welfare of all children, including handicapped, homeless, dependent or neglected children;

(ii) Prevent, remedy, or assist in the solution of problems which may result in the neglect, abuse, exploitation or delinquency of children;

(iii) Prevent the unnecessary separation of children from their families by identifying family problems, assisting families in resolving their problems and preventing the removal of a child from his/her family whenever possible;

(iv) Restore to their families children who have been removed, by providing services to the child and family;

(v) Place children in suitable adoptive homes in cases where restoration to the birth family is not possible or appropriate; and

(vi) Assure adequate care of children away from their homes, for temporary periods or for extended periods, where the child cannot be returned home or cannot be placed for adoption.

(2) *Child Welfare Services Plan (CWSP)* means the document developed through joint planning which describes the State agency's total child welfare program, including services, program deficiencies, plans for program improvement, and allocation of resources by type of service.

(3) *Joint Planning* means State and Federal review and analysis of the State's child welfare services, including analysis of the service needs of children and their families, selection of unmet services needs that will be addressed in a plan for program improvement, and development of measurable goals and objectives that will assure the State's ability to meet these needs.

§ 1357.20 State Child Welfare Services Plan requirements under Title IV-B.

(a) To be eligible for Federal financial participation payment under title IV-B, a State must have a child welfare services plan, jointly planned and developed by the Secretary or his/her designee, and the State agency designated under paragraph (c)(1) of this section.

(b) Child welfare services will be available on the basis of need for services and shall not be denied on the basis of financial need or legal residence.

(c) The State child welfare services plan shall—

(1) Provide for designation by the Chief Executive Officer of the State, or as otherwise provided by State law, of a State agency that will administer or supervise the administration of the State's child welfare services program;

(i) The State agency designated to administer, or supervise the administration of, the child welfare services program shall be the same agency that administers, or supervises the administration of, the social services program for individuals and families under title XX of the Act.

(ii) When the staff of the State or local agency responsible for administering, or supervising the administration of, the child welfare services plan is also responsible for furnishing child welfare services under title IV-B at the State or local level, a single organizational unit within the agency shall be responsible for providing, or supervising the provision of, child welfare services.

This unit shall be under the direction of a chief other than the head of the agency and shall—

(A) Furnish directly, or otherwise ensure delivery of, child welfare services under title IV-B; and,

(B) On the State level, develop policy and maintain policy control for all parts of the child welfare services program funded under title IV-B; and

(C) Directly supervise local agency program implementation or otherwise ensure proper program implementation.

(iii) If, on December 1, 1974, separate agencies at the State and/or local levels administered the title IV-A and IV-B social services programs, the requirements in paragraphs (i) and (ii) of this section do not apply but only so long as such agency is not the agency administering the State's program under title XX; and

(iv) In Guam, the Commonwealth of the Northern Mariana Islands, the Commonwealth of Puerto Rico, and the Virgin Islands, the plan for the child welfare services program under title IV-B and the plan for services under title IV-A shall be administered or supervised by the same agency. To the extent that child welfare services are furnished by staff of the State or local agency administering the Child Welfare Services Plan, the single organizational unit shall be responsible for providing or supervising the delivery of services under both title IV-A and IV-B.

(2) Provide that the State agency shall ensure coordination of services in accordance with Section 1356.30(d) of this title.

(3) Contain a description of all child welfare services as defined in Section 1357.10(b) of this title, provided to children and their families in the State, and specify, by political subdivisions, the geographic areas where these services will be available;

(4) Contain a description of the steps the State will take to make progress in—

(i) Extending the services described in paragraph (3) to cover additional political subdivisions, including the basis on which the political subdivisions were chosen; and

(ii) Reaching additional children in need of services, including the basis for determining the children to be reached and their services needs.

(5) Contain a description of the State agency child welfare staff development and training plan. This description shall include a summary of—

(i) How the agency's training activities will serve the goals and objectives for improving child welfare services;

(ii) The training needs assessment process used to collect the data for the development of the training plan. The needs assessment shall cover the activities which must be performed by supervisors, social workers, paraprofessionals and volunteers; the knowledge and skills required to perform these activities; an assessment of the actual levels of competence of these staff currently providing child welfare services; and the training needs of the staff as determined through this process;

(iii) Arrangements for training and use of paid paraprofessional staff, with particular emphasis on full-time or part-time employment of persons of low income as community aides, and for use of non-paid or partially paid volunteers in providing services and in assisting any advisory committees established by the State agency;

(iv) Plans for staff recruitment and selection which will increase the number of professionally trained personnel so as to ensure that the tasks and responsibilities of child welfare workers required in the Act are handled with maximum competence; and

(v) The agency's plan for monitoring and evaluating the overall staff development and training program and for ensuring that the training needs are met in all political subdivisions.

(6) Provide that the standards and requirements imposed with respect to child day care under title XX of the Act shall apply to day care services under title IV-B, except with respect to eligibility for services;

(7) Provide for appropriate use of the services, facilities, and experience of voluntary agencies including:

(i) Coordination of State and local arrangements for development and delivery of services to children and their families; and

(ii) Emphasis on the use of community agencies and organizations which have established identification and experience with serving the unique needs of major local racial and ethnic populations.

(8) Provide for establishment of Advisory Committees on child welfare services at the State and local levels.

(i) The Committee(s) shall advise the agency's principal policy-setting and administrative officials on policy development, policy setting based on community needs and methods of program administration that facilitate client use of agency services.

(ii) The Committee(s) shall include representatives of other State and local agencies concerned with child welfare services; relevant professional, civic, and advocacy organizations; foster and adoptive parent organizations; private citizens interested in service programs; and clients or their representatives. Clients or their representatives shall constitute at least one-third of the membership, and shall to be selected in a manner that ensures opportunity for client participation in the selection process; and

(iii) Staff assistance from within the agency and other technical assistance shall be provided as necessary to enable the Committee(s) to function effectively. Funding assistance shall also be provided where necessary to allow client participation in the work of the Committee(s).

(9) Provide for independently conducted audits of the programs and activities, funded in whole or in part under title IV-B of the Act, as described in Section 1356.30(j) of this title.

(10) *Reports and Evaluations.* Each State shall submit such reports containing such information and participate in such evaluations as the Secretary may require. The reports shall be in a form specified by the Secretary or his or her designee. The State agency shall comply with any provisions established by the Secretary needed to assure the correctness and verification of these reports.

(11) *Fair Hearings, Appeals and Grievances.* The provisions of Section 1356.30(g) of this title shall be applicable to programs and activities assisted in whole or in part by Federal financial participation under title IV-B of the Act and these regulations.

(12) *Safeguarding Information.* The provisions of Section 1356.30(f) of this title shall be applicable to programs and activities assisted in whole or in part by Federal financial participation under title IV-B of the Act and these regulations.

(13) *Personnel Standards.* The State agency shall use methods relating to the establishment and maintenance of personnel system on a merit basis in accordance with Federal standards and procedures as the Secretary may require.

(14) *General Requirements.* The following DHHS regulations are applicable to programs funded under title IV-B—

45 CFR Part 16—DHHS Grant Appeals Process.
45 CFR Part 74—Administration of Grants.
45 CFR Part 80—Civil Rights.
45 CFR Part 81—Practice and Procedures for Hearings Under Part 80.
45 CFR Part 84—Non-discrimination on the Basis of Handicap.
45 CFR Part 91—Non-discrimination on the Basis of Age in DHHS Programs and Activities Receiving Federal Financial Assistance (when issued).
45 CFR 1396.53—Restriction on State's share in Claiming FFP.

§ 1357.30 Requirements for State eligibility for additional payments.

(a) For any fiscal year after FY 1979 in which a sum in excess of $141,000,000 is appropriated under Section 420 of the Act, a State shall not be eligible for payment of an amount greater than the amount for which it would be eligible if the appropriation were equal to $141,000,000 unless the following conditions have been met—

(1) The State has conducted an inventory of all children who have been in foster care under the responsibility of the State for a period of six months or more preceding the inventory as described in paragraph (a)(3) of this section.

(2) The State has implemented and is operating—

(i) A Statewide information system as described in paragraph (a)(4) of this section;

(ii) A case review system as described in Section 1356.40(d) of this title for all children receiving foster care under the supervision of the State; and

(iii) A program of services designed to reunify children with their parents or families or to provide alternative permanent placements through adoption

or legal guardianship as described in paragraph (a)(5) of this section.

(3) *Inventory.* The inventory shall be a listing of all children who have been in foster care for six months or more, by case number, date of birth, date of initial and current placement, and date of last administrative or judicial review, and for each child listed in the inventory the State agency shall determine—

(i) The appropriateness of and necessity for the current foster care placement;

(ii) Whether the child can or should be returned to his parents or freed for adoption; and

(iii) The services necessary to facilitate either return to the parents, placement for adoption or legal guardianship for the child.

(iv) In making the determinations required in this paragraph the State agency may use information from a case review conducted within the preceeding six months, or the determinations may be made at the time of the child's next scheduled case review or earlier, at the option of the State. If the determinations are made independently from the case review, the State agency shall apply the consideration as referred to in subparagraphs (C) and (F) of Section 1356.40(d)(2)(iii) of this title, (Case Review System), to determine—

(A) The appropriateness and necessity of the current foster care placement;

(B) Whether to focus on reunification or adoption; and

(C) The service necessary to attain the placement goals.

(v) The State shall submit to the Secretary (in a form and manner to be prescribed) a report of the data gathered and the manner in which the inventory was conducted. The report shall be submitted no later than seven (7) months after the start of the inventory and shall include—

(A) The total number of children in foster care at the time of the inventory, by age, legal status, race, and sex;

(B) The number of children in foster care six months or more at the time of the inventory, by case plan goal, by age, race, and sex. Case plan goals to be used in the report shall be return to own home, place for adoption, place with legal guardians, independent living, other permanent placement, long term foster care, and other (specify);

(C) The number of children who are free for adoption and the approximate number eligible for adoption assistance under title IV-E.

(4) *Information System.* The State agency shall establish a permanent Statewide information system. The system shall make it possible: to determine the locations of all children who have been in foster care during the preceding twelve months; to help ensure progress in moving children into permanent status wherever possible, through return home or through adoption; to document preplacement preventive services; to support proper case management; to provides a source of current data for the reporting, monitoring, evaluation and inventory requirements of the Act; and to provide the State and Federal government with information for planning, policy development, technical assistance and budgeting.

(i) The statewide information system shall be capable of providing data from which the legal status, age, sex, ethnicity/race, family structure, location and goals for placement of every child currently receiving foster care services or who has been in foster care within the preceding twelve months, may readily be determined.

(ii) The information system shall, at a minimum, meet the following criteria—

(A) Provide individual and aggregate data on all children receiving services for each political subdivision of the state;

(B) Provide for the use of uniform definitions as the Secretary may require;

(C) Provide for aggregation of data for the State consistent with dates, format and procedures as the Secretary may require; and

(D) With respect to each child, provide that the following information is readily accessible to the State agency:

(*1*) A unique identifer

(*2*) Child and family information (identification of child and family: name, ID number, address, age, ethnicity/race, family structure and special needs;

(*3*) Date case opened (new or reopened);

(*4*) Legal custody status;

(*5*) Eligibility status (IV-A, IV-B, IV-E, SSI);

(*6*) Living arrangement;

(*7*) Placement history for voluntary and involuntary placement beginning with the date of the current continuous placement (as appropriate), including reasons for removal from home; type of adoptive home (relatives, foster parents, other); adoption subsidy status; date freed for adoption and awaiting placement;

(*8*) Case plan goals;

(*9*) Time tables;

(*10*) Frequency of parental contact with the child and agency over the previous six months;

(*11*) Services provided;

(*12*) Source of services provided (public/private agency, direct or purchased);

(*13*) Dates when reviews and dispositional hearings are due and held; dispositions;

(*14*) Date of revocation of voluntary placement;

(*15*) Date and reason for case closure; and

(*16*) Identifier for local agency, caseworker and supervisor;

(E) Assure compliance with Part 95, Subpart F of this title (HHS approval of systems procurements in excess of $100,000 for which Federal financial participation is requested); and

(F) Assure protection of government rights to systems developed with Federal financial participation, as described in 45 CFR 74.145, Nonrevocable, royalty-free license.

(iii) The requirements under paragraph (a)(4)(ii) of this section shall be applicable to all children in foster care on October 1, 1980, or the date upon which the State desires to be found eligible for funds.

(iv) The case-specific information described in paragraph (a)(4)(ii)(D) of this section shall be maintained in a manner which will facilitate State annual reporting on Part IV-E eligible children in placement under voluntary agreement beginning in FY 81. This report shall be submitted to the ACYF on the last day of November each year.

(v) States shall report and cooperate with studies as prescribed by the Secretary, on children served in foster care or while remaining at home and on services provided to their parent(s). Forms and instructions will be furnished to the States.

(vi) To meet Federal reporting requirements, States shall provide information as the Secretary specifies.

(5) *Services Designed To Reunify Families or Achieve Other Permanent Placements.*

(i) The program of services designed to help children return to their homes, shall include—

(A) Day care services, homemaker or caretaker services, and family or individual counseling for parent(s) and child available to all children and families in need;

(B) Other services which the State agency identifies as necessary and appropriate to facilitate reunification of children and families such as respite care; parent education; self-help groups; provision of, or arrangements for, mental health, alcohol and drug abuse counseling, and vocational counseling or rehabilitation.

(C) Written guidelines which stress the value of worker involvement with the family of the child early in the placement and the importance of maintaining and strengthening parent-

child relationships through frequent and regular visits. The guidelines shall contain principles, policies and procedures which workers must follow—

(1) In determining the appropriate reunification services for each family's situation;

(2) In providing (for at least three months) supportive services following reunification; and

(3) In determining that a child cannot be returned home.

(ii) The program of services designed to facilitate adoption or legal guardianship shall include—

(A) Legal services to free children for permanent placement, including voluntary relinquishment, termination of parental rights, or activities required by the State to establish legal guardianship; and

(B) Adoptive services, including recruitment and preparation of adoptive families, registration with adoption exchanges; identification of current foster families as appropriate adoptive parents for children in their care, counseling, and follow-up services to support the placement.

(C) Other activities identified by the agency as necessary and appropriate for permanent placement, such as training families to care for special needs children; training workers to meet legal requirements for court actions; post-adoption services, including parent support groups and other self-help groups; and

(D) Written guidelines which contain principles, policies and procedures which workers shall follow—

(1) In determining the most appropriate plan for the child who cannot return to his or her family, giving first consideration to adoption, followed by alternatives such as legal guardianship, or long-term foster care in exceptional circumstances; and

(2) In determining the appropriate procedures for placement, including preparation for placement, follow-up, and support services as needed for parent(s), legal guardian(s), foster parent(s), and children.

(iii) For each child under the care of the State, the case plan as required in Section 1356.40(d) of this title, Case Review System, shall include—

(1) Goals for reunification with families, or a discussion of factors considered in a determination that the child cannot be returned home and goals for alternative permanent placement; and

(2) Documentation of the caseworker's actions in application of the principles, policies, and procedures set forth in the State's guidelines as required in sub-paragraph (a)(5)(i)(C) or (a)(5)(ii)(D) of this section, as appropriate.

(iv) A description of the program of services to reunify families or to achieve other permanent placement shall be submitted to the RFD for review and approval.

(6) Determinations as to whether a State agency has met the requirements of paragraph (a) of this section shall be based upon the reports submitted and on-site surveys of implementation and shall be made prior to award of additional payments.

(b) If, for any two consecutive fiscal years after Fiscal Year 1979, there is appropriated under Section 420 of the Act a sum equal to or greater than $266,000,000, a State's allotment amount for any fiscal year after those two consecutive fiscal years shall be reduced to an amount equal to its allotment amount for Fiscal Year 1979 unless the following conditions have been met—

(1) The State agency has completed an inventory of children in foster care and determination of the appropriateness of placement and the report of the type specified in paragraph (a)(3) of this section;

(2) The State agency has implemented and is operating—

(i) A Statewide information system as described in paragraph (a)(4) of this section;

(ii) A case review system as described in Section 1356.40(d) of this title for all children receiving foster care under the supervision of the State; and

(iii) A program of services designed to reunify children with their parent(s) or families or to provide alternative permanent placement through adoption or legal guardianship as described in paragraph (a)(5) of this section.

(3) The State agency has implemented and is operating a program of pre-placement preventive services, policies and procedures designed to help children remain with their families. The State agency's program of pre-placement preventive services shall be available to all children and families in need and shall include—

(i) Twenty-four hour emergency caretaker, and homemaker services, day care, crisis counseling, individual and family counseling, emergency shelters, procedures and arrangements for access to available emergency financial assistance; and arrangements for the provision of temporary child care to provide respite to the family for a brief period, as part of a plan for preventing children's removal from home;

(ii) Other services which the agency identifies as necessary and appropriate such as home-based family services; self-help groups; provision of, or arrangements for, mental health, drug and alcohol abuse counseling, and vocational counseling or vocational rehabilitation;

(iii) Written guidelines which workers shall use for assessing the feasibility and appropriateness of services to support and improve family functioning or for determining when a child should be removed from a home and which specify the factors to be considered in making such a decision, including who within the agency shall be involved in the decision.

(iv) Written guidelines which specify the circumstances in which prior efforts to prevent placement would not be required, including situations when—

(A) The circumstances in the home present a substantial risk of harm to the child's welfare; or

(B) Preventive services have been offered but were refused by the family.

(4) For each child under the care of the State, there shall be documentation in the case plan of caseworker efforts to prevent removal from home through the application of the principles, policies and procedures set forth in the State's guidelines as specified in paragraph (b)(3)(iii) and a statement as to why such efforts failed to prevent the child's removal or why these efforts were not appropriate.

(5) A description of the program of pre-placement preventive services shall be submitted to the RPD for review and approval.

(6) Determination as to whether a State agency has met the conditions of paragraph (b) of this section shall be based upon the reports submitted and onsite surveys of implementation.

(c) Amounts expended by the State for the purposes of complying with the requirements of paragraphs (a) and (b) of this section shall be conclusively presumed to have been expended for child welfare services.

§ 1357.40 Development of the State's Child Welfare Services Plan.

(a) The State Child Welfare Services Plan shall contain the following four components—

(1) *Assurances.*

(i) The Assurances are the State agency's commitment to meet the basic requirements of the law and the regulation as described in this part.

(ii) The Administrator of the State agency shall certify on a pre-printed form that the State child welfare services program meets these requirements. If the State's CWSP does not meet all of the requirements specified in the Assurances, the State shall develop goals for correcting the

deficiencies. The goals shall be contained in the Long Range Strategy.

(2) *The Long Range Strategy.*

(i) The Long Range Strategy shall express in measurable goals and objectives the steps the State will take as described in Section 1357.20(c)(4) to cover additional political subdivisions, reach additional children, and strengthen, extend and otherwise improve the scope and quality of child welfare services.

(ii) The Long Range Strategy shall include—

(A) An analysis of the deficiencies in existing services and discrepancies between the services needed and the services provided in the State as described in Section 1357.20(c)(3) and (3);

(B) Goals and objectives for the activities the State will undertake to make progress in child welfare services program development and improved services delivery as described in Section 1357.20(c)(3) during the plan period;

(C) The description of the State's staff development and training plan as required by Section 1357.20(c)(5).

(iii) The State agency shall establish the program period for its Long Range Strategy beginning with either the State, local or Federal government fiscal year and extend for at least two years but not more than three years.

(iv) The Long Range Strategy shall be jointly planned and developed with ACYF Regional Office staff.

(3) *The Annual Operating Plan.* The Annual Operating Plan shall—

(i) Include a report of the State's progress in attaining the goals and objectives in the Long Range Strategy.

(ii) Include a summary of child welfare services to be provided by the State and local agencies for the current plan year with estimates of the anticipated child welfare services expenditures and the number of clients, in a form and manner to be prescribed by the Commissioner.

(iii) Be jointly planned and developed with the ACYF Regional Office staff.

(4) *The Annual Budget Request.*

(i) The Annual Budget Request is the State's request for the award of funds allotted under title IV-B which shall be based on the Federal Fiscal Year and signed by the State agency administrator and the director of the single organizational unit.

(ii) Funds will be disbursed quarterly on the basis of the Annual Budget Request without submission of additional forms.

(b) *Plan Submittal and Review.*

(1) The Assurances, the Long Range Strategy, the Annual Operating Plan and the Annual Budget Request of the jointly developed Child Welfare Services Plan shall be submitted to the ACYF Regional Office 30 days before the effective date in the initial year of the plan.

(2) The Assurances shall be submitted only once and upon review and acceptance by the ACYF Regional Program Director, shall remain continuously in effect for the purposes of the Act, unless amended.

(3) In subsequent years, the Annual Operating Plan, the Annual Budget Request and the Long Range Strategy, when appropriate, shall be submitted 30 days before the effective date.

(4) The State Child Welfare Services Plan shall be submitted to the Governor's office or his/her designated agency for review and comment in accordance with the Office of Management and Budget Circular A-95 prior to OHDS/ACYF acceptance.

(5) State plans (new or amendments thereto) shall be submitted to the ACYF Regional Office in the format and within the period set in the implementing instructions.

(6) The ACYF Regional Program Director shall review the State Plan material to determine whether the requirements of Part 1357 of this title are met and that the document accurately represents the agreements reached through the joint planning process. If the requirements are not met or the document does not accurately reflect joint planning, the plan shall be revised through further discussion and negotiation between the State agency and ACYF Regional staff.

(7) If the final plan submitted by the State agency does not meet the requirements of Section 422(b) of the Act and Part 1357, FFP under title IV-B may be withheld, in whole or in part, after notice and opportunity for a hearing under 45 CFR Part 213.

(c) The title IV-B State plan provisions shall be amended when necessary to reflect new or revised Federal statutes or regulations and court decisions. After acceptance of the original plan, all relevant changes shall be submitted to the ACYF Regional Program Director to determine whether the plan continues to meet federal requirements and policies.

(d) *Review of State and Local Administration and Implementation.* To provide a basis for determining that State agencies are adhering to federal requirements and to the substantive legal and administrative provisions of the State plan, ACYF will review State and local program administration and implementation. The review shall include analysis of procedures and policies of State and local agencies and examination of case records of individual services recipients and a review of supporting documentation.

(1) FFP may be denied for a specific expenditure(s) not made in accordance with the provisions of the State plan.

(2) A grant may be terminated, in whole or in part, under 45 CFR 74.115 when the State agency has materially failed to comply with the terms of the grant.

§ 1357.45 Requirements for direct payments to Indian tribal organizations.

(a) *Program Scope and Definitions.*

(1) *Scope.* Grants are available under title IV-B for allowable costs in expenditures by Indian tribal organizations or consortia in establishing, extending and strengthening child welfare services. To be eligible the Indian tribal organization shall have a child welfare services plan that has been developed jointly by the Indian tribal organization and the Secretary, or his or her designee, and that meets the requirements of these regulations.

(2) *Definition of Terms. Consortium* means a group of tribal organizations which is authorized by the membership to act for them for the purpose of providing services under title IV-B.

Indian tribal organization means the recognized governing body of any Indian tribe, or any legally established organization of Indians which is controlled, sanctioned, or chartered by such governing body.

Indian tribe means any tribe, band, nation, or other organized group or community of Indians [including any Alaska Native village or regional or village corporation as defined in or established pursuant to the Alaska Native Claims Settlement Act (Pub. L. 92-203; 85 Stat. 688)] which is recognized as eligible for the special programs and services provided by the United States to Indians because of their status as Indians or is located on, or in proximity to a Federal or State reservation or rancheria.

(b) *Child Welfare Services Plan Requirements Under Title IV-B.*

(1) To be eligible for a grant under title IV-B, an Indian tribal organization must have contracted pursuant to the Indian Self-Determination Act, (title I of Pub. L. 93-638) to provide those child welfare services formerly provided directly by the Secretary of the Interior (25 U.S.C. 13).

(2) To be eligible for a grant under title IV-B, an Indian tribal organization must have a plan for child welfare services jointly planned and developed by the Secretary and the Indian tribal organization or consortium.

(3) The Indian Tribal organization's plan shall—

(i) Describe the tribal organization, including:

(A) The name of the tribal organization;

(B) The legal and organizational relationship of the tribal organization to the Indians in the area to be served;

(C) Legal responsibility for children who are in foster care on the reservation and for adoption. Jurisdiction in civil and criminal matters, existence or nonexistence of a tribal court and the type of court and codes, if any;

(D) Standards for foster family and institutional care and day care;

(E) Tribe's political subdivisions, if any;

(F) Whether the tribal organization is controlled, sanctioned or chartered by the governing body of Indians to be served, and, if so, documentation of such fact;

(G) Any limitations on authorities granted the tribal organization; and

(H) The tribal resolution(s) authorizing it to apply for a grant under this part.

(ii) The Indian tribal organization's plan shall meet the requirements in Section 1357.20(b) and (c)(3) through (c)(14). Substitute "Indian tribe" for "State" and disregard references to title IV-E whenever they occur. The coordination requirement has been modified as follows:

Coordination of Services

(1) The Indian tribal organization's plan shall assure coordination of services with other Federal or tribal programs to ensure maximum availability and utilization of resources that promote and enhance the welfare of children, youth and families served under title IV-B.

(2) The Indian tribal organization's plan shall provide for procedures that will ensure coordination of services including—

(i) An assessment of the relevance and appropriateness of other programs and services to the needs of children and their families;

(ii) Periodic assessment of the effectiveness of the tribal organization's arrangements for coordination of program services and activities.

(c) Requirements for Eligibility for Additional Payments

(1) For any fiscal year after FY 1979 in which a sum in excess of $141,000,000 is appropriated under Section 420 of the Act, a tribe shall not be eligible for payment of an amount greater than the amount for which it would be eligible if the appropriation were equal to $141,000,000 unless the Indian tribal organization shall implement the requirements in Section 1357.30(a). Substitute "Indian tribe" for "State," "Indian tribal organization" for "State agency," and "tribal geographic area" for "Statewide" wherever they occur.

(2) If, for any two consecutive fiscal years after Fiscal Year 1979, there is appropriated under Section 420 of the Act a sum equal to or greater than $266,000,000, a tribe's allotment amount for any fiscal year those two consecutive fiscal years shall be reduced to an amount equal to what the allotment amount would have been for Fiscal Year 1979 unless the Indian tribal organization shall implement the requirements in Section 1357.30(b) and (c). Substitute "Indian tribe" for "State," "Indian tribal organization" for "State agency," and "tribal geographic area" for "Statewide" wherever they occur.

(d) Development of Indian Tribal Organization's Child Welfare Services Plan

(1) The Indian Tribal Organization shall meet the requirements of 1357.40 with the exception of 1357.40(b)(4). This requirement can be disregarded unless the tribe has a procedure for review similar to that described in the Office of Management and Budget Circular A-95. Substitute "Indian tribe" for "State" and "Indian tribal organization" for "State agency" wherever they occur.

(e) Grant Distribution Formula and Fiscal Requirements

(1) Grants shall be made beginning in October, 1982 to eligible Indian tribal organizations in a State which has a Child Welfare Services Plan under title IV-B. Only one Indian tribal organization within an Indian reservation (service area) can be eligible for a grant. A consortium of Indian tribal organizations can be eligible for a grant.

(2) The allotment for each tribe is determined as follows:

(i) The Indian tribe's (or consortium's) resident population under 21 is divided by the State's total population under 21;

(ii) The result of paragraph (i) is multiplied by 1.5;

(iii) The State's total IV-B allotment is multiplied by the result of paragraph (ii).

(3) Funds for eligible Indian tribal organizations shall be paid from the allotment for the State in which the tribal organization is located.

(4) If an eligible Indian tribal organization (or consortium) includes population from more than one State, a proportionate amount of the grant will be paid from each State's allotment.

(5) In determining the Indian population under 21, Bureau of Census data will be used, or if unavailable, the most recent and reliable independent data available.

(6) The Indian tribal organization shall adhere to the requirements in Section 1357.50 (c), (d), (f) and (g). Substitute "Indian tribe" for "State," "Indian tribal organization" for "State agency."

(7) The Secretary need not make an award to any Indian tribal organization if it can be clearly demonstrated that the receipt of a grant would reduce services to Indian children and their families.

(8) The receipt of title IV-B funds shall be in addition to and not a substitute for funds otherwise previously expended by the Indian tribal organization or consortium for child welfare services.

§ 1357.50 Fiscal requirements (IV-B).

(a) *Allotments to State.*

(1) The Commissioner shall publish the allotment percentage for each State between October 1 and November 30 of each even numbered year—

(i) Data used shall be the average per capita income of each State and the United States for the three most recent calendar years for which satisfactory data is available from the U.S. Department of Commerce.

(ii) The published allotment percentages shall be conclusive for each of the next two fiscal years which begin October 1st, following the publication.

(2) The allotment of Federal funds for child welfare services for each State with an approved State plan, jointly developed by the State agency and the Commissioner, shall be calculated in the following manner—

(i) Each State shall receive a "base" amount of $70,000; plus

(ii) An amount which is computed as follows—

(A) For each State, multiply the State's population under age twenty-one (21) by that State's allotment percentage as published by the Commissioner;

(B) Add all the products computed under paragraph (A) for all the States together;

(C) Subtract the sum of the "base amount" from the total funds available;

(D) Divide the amount calculated under paragraph (C) by the sum of the products in paragraph (B); and

(E) Multiply the result in (D) by the product for each State in paragraph (A).

(3) For the purposes of this section only, the term United States means the fifty States and the District of Columbia.

(4) Payments made directly to an Indian Tribal Organization under Section 1357.45 are included within the allotment of the State within which the tribal organization is located.

(b) *Reallotment.*

(1) When a State certifies to the Commissioner that funds available to that State under its title IV-B allotment will not be required for carrying out that

State's plan, those funds shall be available for reallotment to another State.

(2) The Commissioner may reallot available funds to another State when he or she determines that—

(i) The requesting State's plan requires funds in excess of the State's original allotment; and

(ii) The State will be able to obligate the additional funds during the current fiscal year.

(c) *Allowable Costs.*

FFP is available for allowable costs in expenditures under title IV-B to establish, extend and strengthen child welfare services and to effectively administer, evaluate and monitor the State plan. These expenditures include, but are not limited to:

(1) In-home services that support or supplement parental care of children to avoid the necessity of out-of-home placement, such as services, respite care, day care, after care and counseling which meet standards set by the State agency;

(2) Professional education for appropriate State agency staff and for inservice training of all State agency staff providing or regulating child welfare services; for professional staff attending an educational facility, the provisions of 45 CFR 235.63 and 235.64 shall apply;

(3) Training of other providers of services, under contract or other agreement with the State agency, such as foster parents, child care institution staff and day care personnel;

(4) State and local agency staff attendance at meetings pertinent to the development and implementation of child welfare services in the State and local communities.

(5) State and local advisory committees for day care services, child welfare advisory committees of the State or local agency, and foster care review boards appointed by and responsible to the State or local agency, including expenses of members to attend meetings;

(6) Supervision and related costs of the use of volunteers;

(7) State and local agency membership in organizations related to child welfare services;

(8) Foster Care Maintenance payments; made on behalf of children placed in foster family homes, group homes or child care institutions which are licensed or are approved as meeting the standards for licensing or approval specified in Section 1356.40(h);

(9) Services, including transportation, to assist in the reunification of children with their families when out-of-home care has been necessary;

(10) Adoption services, before and after finalization of the adoption and the non-recurring costs of adoption proceedings;

(11) Non-recurring costs of establishing a special needs child or children in the home of adoptive parent(s), including the costs of special furniture for a handicapped child or additional beds for a large sibling group.

(12) Day care services for children in out-of-home care in family day care homes, groups homes, group day care homes and day care centers, when the State or local agency has accepted responsibility for the provision of the care for these children and the caretaker is licensed or approved as meeting the requirements for licensing or approval;

(13) Care for children in emergency care facilities which meet standards set by the State agency;

(14) Counselling and other appropriate services to youth, including status offenders and their families in crisis;

(15) Care of unmarried mothers and their children in maternity homes and centers which meet the standards set by the agency;

(16) Development of the State's child welfare services through activities which show promise of advancing the State's child welfare services and are conducted by public or private non-profit institutions of higher education, other public or voluntary agencies, or organizations that engage in research or demonstration of child welfare activities;

(17) Case management, including monitoring, evaluation, reporting and the costs of compiling statistical report(s) required by these regulations;

(18) Independent living arrangements for children under State agency supervision and guardianship;

(19) Care for runaway children who are not yet age 18, in facilities which meet standards set by the State agency and transportation for returning these children (including, if necessary transportation of an attendant) to their own communities when their parents or other persons, agencies or institutions legally responsible for support of these children cannot assume that responsibility; and

(20) Costs for the inventory, Statewide information system, case review system, the service program designed to prevent placement in foster care, and the service program designed to return children to their families or place them for adoption or legal guardianship, as described in Section 1357.30.

(d) *Restrictions on the Use of Title IV-B Funds.*,

(1) The total of Federal funds used for the following purposes under title IV-B (whether paid under Section 420 of the Act or transferred from unused title IV-E or IV-A Foster Care allotments) may not exceed an amount equal to the FY 1979 Federal payment under title IV-B:

(i) Child day care necessary solely because of the employment, or training to prepare for employment, of a parent or other relative with whom the child involved is living.

(ii) Foster care maintenance payments.

(iii) Adoption assistance payments.

(2) Notwithstanding paragraph (1), State expenditures required to match the title IV-B allotment may include foster care maintenance expenditures in any amount.

(3) Funds awarded under title IV-B may not be used for the costs, purchase, construction, or other capital costs of child care facilities.

(e) *Federal Financial Participation.*

Federal financial participation is available at the rate of 75% for allowable costs in expenditures made under this Part.

(f) *Payments to States.*

The procedures in the following sections of 45 CFR shall apply to grants made under the provisions of these regulations and title IV-B of the Act—

(1) Section 201.5, Grants (except that ACYF shall supply appropriate forms and instructions)

(2) Section 201.6, Withholding/Reduction of FFP

(3) Section 201.7, Judicial Review

(4) Section 201.15, Deferral

(5) Section 201.66, Repayment of Federal funds in installments

(g) *Apportionment of Costs.*

(1) *General.*

Federal financial participation is available only if costs are incurred in accordance with the grants administration requirements of Part 74 of this title and where appropriate, allocated in accordance with the provisions of Section 205.150 of this title, Cost Allocation.

(i) Non-public third party in-kind contributions may not be used to meet the requirements of the non-Federal share of the costs of programs funded under this Part 1357.

(ii) Subpart I, Financial Reporting Requirements, of Part 74 of this title does not apply. ACYF will provide forms and instructions for financial reporting.

(h) *Maintenance of Effort.*

(1) A State may not receive an amount of Federal funds under title IV-B greater than the amount of Federal funds received under title IV-B in Federal fiscal year 1979 unless the State's expenditure of State and local appropriated funds for public child

welfare services (as defined in 1357.10(b)(1)) is equal to or greater than the total of that State's expenditure from State and local appropriated funds for similar covered services and programs in Federal fiscal year 1979.

(2) In computing a State's expenditure in Federal FY 79 and any subsequent fiscal year expenditure level under the Act and these regulations, the following costs may not be included—

(i) Expenditures and costs for child day care necessary to support the employment of a parent or other relative;

(ii) Foster care maintenance payments; and

(iii) Adoption assistance payments.

(3) A State applying for an amount of Federal funds under title IV-B greater than the amount of title IV-B funds received by that State in Federal fiscal year 1979 must certify:

(i) The amount of their expenditure in Federal fiscal year 1979 for child welfare services as described in paragraphs (1) and (2) of this section, and

(ii) The amount of State and local funds that have been appropriated and are available for child welfare services as described in paragraph (i) above for the Federal fiscal year for which application for additional funds is being made.

Records verifying the required certification shall be maintained by the State and made available to the Secretary as necessary to confirm compliance with this section.

[FR Doc. 80-40556 Filed 12-30-80; 8:45 am]
BILLING CODE 4110-92-M

Health Care Financing Administration

42 CFR Parts 431, 435, and 436

Medicaid Program; Entitlement of Individuals Receiving Cash Assistance Under the Foster Care Maintenance Payments Program or the Adoption Assistance Program

AGENCY: Health Care Financing Administration (HCFA), HHS.

ACTION: Proposed rule.

SUMMARY: This proposal would implement the Medicaid provisions of the Adoption Assistance and Child Welfare Act of 1980 (Pub. L. 96-272). The Act establishes a new title IV-E of the Social Security Act, providing for adoption subsidies for certain hard-to-place children and for an expanded foster care program. Under the law, children for whom adoption assistance or foster care maintenance payments are made are entitled to Medicaid. This proposal specifies State financial responsibility for Medicaid.

DATES: To assure consideration, comments should be mailed by March 16, 1981.

ADDRESS: Address comments in writing to: Administrator, Health Care Financing Administration, Department of Health and Human Services, P.O. Box 17076, Baltimore, Maryland 21235.

If you prefer, you may deliver your comments to Room 309-G, Hubert H. Humphrey Building, 200 Independence Ave, S.W., Washington, D.C., or to Room 789, East High Rise Building, 6401 Security Boulevard, Baltimore, Maryland.

In commenting, please refer to BPP-113-P. Agencies and organizations are requested to submit comments in duplicate.

Comments will be available for public inspection, beginning approximately two weeks after publication, in Room 309-G of the Department's office at 200 Independence Ave, S.W., Washington, D.C. 20201 on Monday through Friday of each week from 8:30 to 5:00 p.m. (202-245-7890).

Because of the large number of comments we receive, we cannot acknowledge or respond to them individually. However, in preparing the final rule, we will consider all comments and will respond to them in the preamble to that rule.

FOR FURTHER INFORMATION CONTACT: Dennis McNown, 301-594-8220.

SUPPLEMENTARY INFORMATION: The Adoption Assistance and Child Welfare Act of 1980 (Pub. L. 96-272), enacted June 17, 1980, seeks to assure adequate planning for children who need help in preserving their homes or who need care away from their homes. The law creates a new title IV-E of the Social Security Act, which replaces the foster care program under title IV-A (Aid to Families with Dependent Children (AFDC)) and established an adoption assistance program, which provides continuing adoption subsidies, Medicaid, and title XX (social services) benefits for hard-to-place children with special needs.

The children covered under the adoption program are those who are eligible for AFDC, title IV-E foster care maintenance payments, or Supplemental Security Income (SSI). Proposed implementing regulations are provided in a separate document published by the Office of Human Development Services in this issue of the Federal Register.

In addition to providing Federal funds to finance continuing adoption assistance for hard-to-place SSI, AFDC, and title IV-E foster care children with special needs, Pub. L. 96-272 also entitles two new groups to benefits under the foster care maintenance payment program: (1) certain children voluntarily removed from their homes; and (2) children in public non-detention-type child-care facilities that house no more than 25 children. Previously, the law had provided for foster care only for children removed from their homes as a result of a judicial determination, and did not provide foster care coverage for children in public institutions.

The new provisions of law mandate Medicaid eligibility for all children for whom payments are made under the foster care maintenance payments program or the adoption assistance program. These children are deemed to be recipients of Aid to Families With Dependent Children (AFDC) under title IV-A of the Social Security Act (see section 101 of Pub. L. 96-272 which adds sections 472(d) and 473(b) of the Social Security Act). Since AFDC recipients are automatically eligible for Medicaid by virtue of their AFDC recipient status, the new legislation, by providing for "deemed" AFDC recipient status, provides mandatory Medicaid coverage for these individuals.

Under the proposed regulations, the State making the foster care maintenance payments or the adoption assistance payments would be required to retain financial responsibility for Medicaid. This is consistent with current HCFA policy requiring the State providing cash assistance resulting in Medicaid eligibility to also have responsibility for Medicaid for the individuals involved (see CFR 435.110, 435.120, 435.130, and 436.110).

Usually, when a recipient of a cash assistance program that is linked to Medicaid moves to another State, the individual loses eligibility for that cash assistance program (and Medicaid) in the originating State, and is covered for both programs by the new State if he or she meets that State's requirements. However, as explained in the preamble to the proposed regulations implementing title IV-E, the Department has determined with respect to foster care that, when a family moves to another State, responsibility for foster care payments will remain with the originating State. Therefore, these proposed regulations require that responsibility for Medicaid remain with the originating State.

This represents a continuation of policy in effect under the title IV-A AFDC foster care program, which required that the State with initial responsibility for foster care payments retain that financial responsibility.

including Medicaid, when the foster care placement is made out-of-State.

With respect to adoptions, section 101(a)(4)(A) of Pub. L. 96-272 (new section 475(3)(B) of the Social Security Act) requires that, for adoption assistance agreements entered into on or after October 1, 1983, the agreement must remain in effect regardless of the State in which the adoptive parents reside at any given time. Thus, the originating State will remain responsible for continuing the assistance even if the family moves. (Before that date, if the family moves to another State, the originating State may either continue the payments or end the agreement.) If a family does move out-of-State and continues to receive payments, a question arises as to whether the child is still a resident of the first State and should continue to receive Medicaid coverage from that State.

We believe that the State making the adoption payments should retain financial responsibility for Medicaid. We think that this is consistent with the intent of Congress, as expressed in section 101(a)(a)(A) of the new statute, and with the longstanding relationship between AFDC and Medicaid. Since the original State must continue to provide the subsidy, and since the statute, by providing that these children are deemed to be AFDC recipients, specifically continues the existing linkage between Medicaid and the cash programs, we think there is no basis to consider the child a deemed AFDC recipient in a State other than the one carrying out the adoption assistance contract, nor to impose on any other State the obligation, stemming from such a contract, to be financially responsible for Medicaid. The proposed regulations would specify this policy.

It should be noted that new section 475 of the Act also provides for interstate compacts as one means of protecting the interests of the child when the family moves to another State. This is compatible with existing Medicaid regulations, which allow for interstate agreements on resolving questions of residency for Medicaid eligibility purposes (42 CFR 435.403(i) and 436.403(h)). States involved in adoption assistance agreements may wish to explore the possibility of interstate compacts for financial responsibility and the provision of Medicaid services.

We propose to make the following changes in current regulations:

(1) 42 CFR 431.52, regulations on payments for Medicaid services furnished out of State, would be changed to clarify that the originating State retains financial responsibility for Medicaid when a child whose eligibility is based on receipt of title IV-E payments from that State moves to another State.

(2) We would amend our current rules on mandatory coverage of AFDC recipients (42 CFR 435.110 and 436.110) to provide that States and jurisdictions must provide Medicaid to children for whom foster care maintenance payments or adoption assistance payments are made.

(3) We propose to amend our current rules on State residency requirements (42 CFR 435.403 and 436.403) to clarify that the State of residence, for purposes of Medicaid eligibility for these children, is the State making the foster care maintenance payments or adoption assistance payments.

(4) We would amend the definitions relating to institutional status (42 CFR 435.1009) to implement the provision concerning public child care institutions that accommodate no more than 25 children. Since AFDC-foster care under title IV-A will not be completely phased out until October 1, 1982, the provision applies both to that program and to the foster care maintenance program under title IV-E. The definition of a child care institution added to § 435.1009 specifies that such institutions not include detention facilities, forestry camps, training schools, or any other type of facility primarily operated for detention of delinquent children. This exclusion is based on the new section 472(c)(2) of the Social Security Act.

(5) We would make two technical changes by adding the statutory basis for these regulations to 42 CFR 435.2 and 436.2.

42 CFR Chapter IV, Subchapter C, is amended as set forth below:

Authority: Sec. 1102 of the Social Security Act (42 U.S.C. 1302)

A. Part 431 is amended as follows:

Section 431.52 is amended by revising paragraphs (b)(3) and (b)(4) and by adding a new paragraph (b)(5). As revised, paragraphs (b)(3) and (b)(4) and new paragraph (b)(5) read as follows:

§ 431.52 Payments for services furnished out of State.

* * * * *

(b) *Payment for services.* A State plan must provide that the State will furnish Medicaid to a recipient who is a resident of the State while that recipient is in another State, to the same extent that Medicaid is furnished to residents in the State, when—

* * * * *

(3) The State determines, on the basis of the attending physician's medical advice, that the needed medical services, or necessary supplementary resources, are more readily available in the other State;

(4) It is general practice for recipients in a particular locality to use medical resources in another State; or

(5) The State is making adoption assistance or foster care maintenance payments under title IV-E of the Act for the recipient.

* * * * *

B. Part 435 is amended as follows:

1. Section 435.3 is amended by adding citations 472(d) and 473(b) in numerical order, to read as follows:

§ 435.3 Basis.

This part implements the following sections of the Act, which state eligibility requirements and standards:

472(d) Eligibility for children receiving foster care maintenance payments.
473(b) Eligibility for children receiving adoption assistance payments.

* * * * *

2. Section 435.110 is amended by revising paragraph (a) as follows:

§ 435.110 Individuals receiving aid to families with dependent children.

(a) A Medicaid agency must provide Medicaid to individuals receiving cash assistance under AFDC. Individuals receiving foster care maintenance payments or adoption assistance payments under title IV-E of the Act are considered to be receiving AFDC.

* * * * *

3. Section 435.403 is amended by revising paragraph (e) as follows:

§ 435.403 State residence.

* * * * *

(e) *Individuals receiving a State supplementary payment (SSP), or for whom an adoption assistance payment or foster care maintenance payment is made.*

(1) For any individual who is receiving a SSP, the State of residence is the State making the payments.

(2) For any individual whose Medicaid eligibility is based on the receipt of foster care maintenance payments or adoption assistance payments under title IV-E of the Act, the State responsible for Medicaid is the State making title IV-E payments.

* * * * *

4. Section 435.1009 is amended by adding in alphabetical order the definition of the "child care institution" and by revising the definition of "public institution" as follows:

§ 435.4009 Definitions relating to institutional status.

For purposes of FFP, the following definitions apply:

* * * * *

"Child-care institution" means a public child-care institution that accommodates no more than twenty-five children, and is licensed by the State in which it is situated or has been approved, by the agency of the State responsible for licensing or approval of institutions of this type, as meeting the standards established for licensing. The term does not include detention facilities, forestry camps, training schools, or any other facility operated primarily for the detention of children who are determined to be delinquents.

* * * * *

"Public institution" means an institution that is the responsibility of a governmental unit or over which a governmental unit exercises administrative control. The term "public institution" does not include (1) a medical institution as defined in this section; (2) an intermediate care facility as defined in §§ 440.140 and 440.150 of this chapter; (3) a publicly operated community residence that serves no more than 16 residents, as defined in this section; or (4) child care institutions as defined in this section, with respect to (i) children for whom foster care maintenance payments are made under title IV-E of the Act, and (ii) children receiving AFDC—foster care under title IV-A of the Act.

* * * * *

C. Part 436 is amended as follows:

§ 436.2 [Amended]

1. Section 436.2 is amended by adding citations 472(d) and 473(b) in numerical order to read as follows:

472(d) Eligibility for children receiving foster care maintenance payments.
473(b) Eligibility for children receiving adoption assistance payments.

* * * * *

2. Section 436.110 is amended by revising paragraph (a) as follows:

§ 436.110 Individuals receiving cash assistance.

(a) A Medicaid agency must provide Medicaid to individuals receiving cash assistance under OAA, AFDC, AB, APTD, or AABD. Individuals receiving foster care maintenance payments or adoption assistance payments under title IV-E of the Act are considered to be receiving AFDC.

* * * * *

3. Section 436.403 is amended by revising paragraph (c), redesignating paragraphs (e) through (i) as paragraphs (f) through (j) and adding a new paragraph (e). As revised new paragraph (c) and new paragraphs (e) through (j) read as follows:

§ 436.403 State residence.

* * * * *

(c) *Who is a State resident.* A resident of a State is any individual who:

(1) Meets the conditions in paragraphs (d) through (g) of this section; or

(2) Meets the criteria specified in an interstate agreement under paragraph (i) of this section.

* * * * *

(e) *Individuals for whom foster care maintenance payments or adoption assistance payments are made.* For any individual whose Medicaid eligibility is based on the receipt of foster care maintenance payments or adoption assistance payments under title IV-E of the Act, the State responsible for Medicaid is the State making the title IV-E payments.

(f) *Non-institutionalized individuals.* (1) For any non-institutionalized individual under age 21, the State of residence is determined in accordance with 45 CFR 233.40, the rules governing residence under the AFDC program.

(2) For any other individual over age 21, the State of residence is the State where he is—

(i) Living with the intention to remain there permanently or for an indefinite period (or if incapable of stating intent, where he is living); or

(ii) Living and which he entered with a job commitment or seeking employment (whether or not currently employed).

(g) *Institutionalized individuals.* (1) For any institutionalized individual who is under age 21 or who is age 21 or older and became incapable of indicating intent before age 21, the State of residence is—

(i) That of his parents, or his legal guardian if one has been appointed; or

(ii) That of the parent applying for Medicaid on the individual's behalf, if the parents reside in separate States and there is no appointed legal guardian.

(2) For an institutionalized individual who became incapable of indicating intent at or after age 21, the State of residence is the State in which the individual was living when he became incapable of indicating intent. If this cannot be determined the State of residence is the State in which he was living when he was first determined incapable of indicating intent.

(3) Under both paragraphs (g) (1) and (2) of this section, the State where the institution is located is the individual's State of residence unless that State determines that the individual is a resident of another State, by applying the rules under paragraphs (g) (1) and (2).

(4) For any other institutionalized individual over age 21, the State of residence is the State where he is living with the intention to remain there permanently or for an indefinite period.

(h) *Specific prohibitions.* (1) The agency may not deny Medicaid eligibility because an individual has not resided in the State for a specified period.

(2) The agency may not deny Medicaid eligibility to an individual in an institution, who satisfies the residency rules set forth in this section, on the grounds that the individual did not establish residence in the State before entering the institution.

(3) The agency may not deny or terminate a resident's Medicaid eligibility because of that person's temporary absence from the State if the person intends to return when the purpose of the absence has been accomplished, unless another State has determined that the person is a resident there for purposes of Medicaid.

(i) *Interstate agreements.* A State may have a written agreement with another State setting forth rules and procedures resolving cases of disputed residency. These agreements may establish criteria other than those specified in paragraphs (b) through (g) of this section, but must not include criteria that result in loss of residency in both States or that are prohibited by paragraph (h). The agreements must contain a procedure for providing Medicaid to individuals pending resolution of the case.

(j) *Continued Medicaid for institutionalized recipients.* If, on the effective date of this section, an agency is providing Medicaid to an institutionalized recipient who, as a result of this section, would be considered a resident of a different State—(1) The agency must continue to provide Medicaid to that recipient for two years unless it makes arrangements with another State of residence to provide Medicaid at an earlier date; and (2) Those arrangements must not include provisions prohibited by paragraph (h) of this section.

(Sec. 1102 of the Social Security Act (42 U.S.C. 1302)

(Catalog of Federal Domestic Assistance Program No. 13.714, Medical Assistance Program)

Dated: December 22, 1980.

Earl M. Collier, Jr.,

Acting Administrator, Health Care Financing Administration.

Approved: December 23, 1980.

Patricia Roberts Harris,

Secretary.

[FR Doc. 80-40557 Filed 12-30-80; 8:45 am]

BILLING CODE 4110-92-M

Federal Register

Wednesday
December 31, 1980

Part VII

Department of Education

Student Assistance General Provisions; Final Regulations and Request for Comments

DEPARTMENT OF EDUCATION

34 CFR Part 668

Student Assistance General Provisions

AGENCY: Department of Education.

ACTION: Final Regulations with comments invited.

SUMMARY: These regulations include definitions, special terms and provisions that are common to student financial assistance programs authorized by Title IV of the Higher Education Act (Subpart A), and the student consumer information provisions currently codified in 34 CFR Part 686 (Subpart C). Several provisions in this part have also been amended to conform to statutory changes made in Title IV of the Higher Education Act by the Education Amendments of 1980, Pub. L. 96-374. For example, the regulations regarding the limitation, suspension and termination of the eligibility of institutions have been amended to provide for the Secretary's new authority to impose fines for program violations. With regard to the common definitions, terms and provisions in Subpart A, it is the Secretary's intention to delete those provisions from the individual program regulations when those regulations are republished.

DATES: All comments, suggestions, or objections must be received on before March 2, 1981.

EFFECTIVE DATE: These regulations are expected to take effect 45 days after they are transmitted to the Congress. Regulations are usually transmitted to the Congress several days before they are published in the Federal Register. The effective date of these regulations, call or write the Department of Education contact person.

FOR FURTHER INFORMATION CONTACT: William L. Moran or Robert E. Jamroz, Office of Student Financial Assistance, Room 4318, ROB-3, 400 Maryland Avenue, SW., Washington, D.C. 20202. Telephone (202) 472-4300.

SUPPLEMENTARY INFORMATION: The following is a discussion of the changes made in part 668.

Subpart A—General

The following definitions have been taken from the individual title IV student financial assistance program regulations and have been included in this subpart: "public and nonprofit private institution of higher education," "proprietary institution of higher education," "postsecondary vocational institution," "recognized equivalent of a high school diploma," "ability to benefit," "one year training program" and "six month training program." These definitions and terms will be deleted from each program's regulations when those regulations are published.

The various civil rights requirements and criminal penalties that institutions are subject to in their administration of title IV student financial assistance programs have also been included in this subpart. Again, if such provisions are currently in existing program regulations, they will be deleted when those regulations are published.

The Education Amendments of 1980 amended the definition of a postsecondary vocational institution in two respects. A postsecondary vocational institution may now admit as regular students persons who are beyond the age of compulsory school attendance in the State in which the institution is located and have the ability to benefit from the education or training offered. Further, these institutions no longer need to be fully accredited but may qualify under the statutory definition if they are making reasonable progress toward accreditation, i.e., candidacy status, or if the credits of at least three of their students are fully accepted upon transfer by at least three accredited institutions.

The "ability to benefit" requirement that certain institutions must meet has been modified. Institutions no longer need to document and keep records for each student. An institution may now satisfy this requirement if it can demonstrate that it had developed and consistently applies criteria for determining that its students have the ability to benefit from the education or training it offers. Of course, however, the institution must be able to justify, upon request, that the students it admits have that ability.

Subpart B—Standard for Audits, Records, Financial Responsibility, Administrative Capability and Disposition of Refunds.

The Education Amendments of 1980 require institutions that wish to participate in the title VI student assistance programs, other than the State Incentive Grant Program, to enter into a program participation agreement with the Secretary. Section 668.11 has been revised to incorporate this requirement.

The Education Amendments of 1980 deleted the aggregate maximum grant amount in the Supplemental Educational Opportunity Grant program and also deleted the requirement that limited a student's eligibility for the Supplemental Grant Program to four academic years. The law now provides that a student is eligible for a Supplemental Grant as long as he or she has not received his or her first baccalaureate degree.

The Secretary has revised the financial aid transcript requirement, § 668.14, to accommodate this change by eliminating the need to report on the transcript the amount of Supplemental Grants a student received over the years while attending the institution. The institution shall indicate if the student ever received a Supplemental Grant and report only the amount of Supplemental Grants disbursed to a student for the award period in which the student transfers. This information is needed to prevent a student from receiving grants totaling more than $2000 per academic year under that program.

The financial aid community has noted that the information requested on the transcript regarding the dependent-independent status of a student is not of any value to the institution the student transfers to. Therefore, the Secretary has dropped this requirement.

Section 668.22 has been added and includes the provision that is currently in each title IV student assistance program that funds received by an institution under any such program are held in trust by the institution for the intended student beneficiaries and may not be used for any other purpose.

As a result of the creation of the Education Department, the functions and responsibilities formerly handled by the HEW Audit Agency with regard to education matters are now handled by the Education Department's Inspector General's Office. Thus the changes in §§ 668.12 and 668.13.

Subpart C—Student Consumer Information Services

The Student Consumer Information Services regulations currently codified in Part 686 of Title 34 of the Code of Federal Regulations are incorporated into the Student Assistance General Provisions as Subpart C. Upon publication of these regulations, part 686 will be revoked. These regulations are being transferred to this part since they are now, as a result of the Education Amendments of 1980, applicable to all institutions participating in any title IV student assistance program. Before this statutory change, only institutions receiving an administrative cost allowance were subject to these provisions.

Other changes made by the Education Amendments of 1980 in the consumer information services requirements include: (1) Deleting the requirement

that an institution inform students of the retention and drop-out rates for particular programs it offers, (2) adding the requirement that the institution describe to its students or prospective students, any special facilities or services available to handicapped students, and (3) adding the requirement that the institution inform its enrolled or prospective students of the names of the associations, agencies or governmental bodies which accredit, approve or license the institution or its programs.

As a result of the Education Amendments of 1980, institutions no longer need to use their administrative allowances to carry out these information activities. Therefore, the audit and recordkeeping requirements for administrative allowances in the current regulations have been deleted.

Subpart F—Misrepresentation

This subpart, currently Subpart C, is recodified as Subpart F. No other changes have been made to these regulations.

Subpart G—Fine, Limitation, Suspension and Termination Procedures

This subpart, currently Subpart H, is recodified as Subpart G. This subpart has also been amended to include the authority given to the Secretary by the Education Amendments of 1980 to impose fines on institutions which fail to properly administer the title IV student assistance programs. The procedures used for fines are identical to the ones used for limitations and terminations.

Other minor procedural changes were made in this subpart. These changes include, for example, changes in relevant sections in the subpart in order to accomodate the authority to impose fines, the deletion of all references to the HEAL program, and the adding of references to the Parent Loan for Undergraduate Students Program (PLUS). The reference to the HEAL program, the Health Education Assistance Loan Program authorized by title VII–C–1 of the Public Health Service Act, was deleted since statutory authority to administer that program is lodged in the Secretary of Health and Human Services.

Miscellaneous.

Other changes of a minor, technical or procedural nature have been made as a result of the reorganization of the part.

Invitation to Comment:

Many members of the financial aid community have indicated that these Student Assistance General Provisions should be expanded to include all statutory provisions and title IV student assistance program regulations that are common to all the title IV student assistance programs. For example, it has been proposed that the regulations addressing student eligibility (Section 484 of the Higher Education Act) be incorporated into these regulations and deleted from the individual title IV program regulations. Interested persons are invited to submit comments or recommendations regarding this proposal.

Written comments and recommendations may be sent to the address given at the beginning of this preamble. Comments must be received no later than March 2, 1981.

All comments submitted in response to this proposal will be available for public inspection in Room 4318, ROB–3, 7th & D Streets, SW., Washington, D.C., between the hours of 8:30 a.m. and 4:00 p.m., Monday through Friday, of each week except Federal holidays.

Assessment of Educational Impact

On November 14, 1980, the Secretary published a notice in the Federal Register of the Department's intent to publish regulations necessary to implement the Education Amendments of 1980. In that notice, the Department listed the existing regulations affected by the new law and requested comments whether those regulations required information that is already being gathered by or is available from any other agency or authority of the United States. The regulations in this document are based on regulations listed in the November 14, 1980 notice. Based on any comments received and the Department's own review, it has been determined that the regulations in this document do not require information that is already being gathered by or is available from any other agency or authority of the United States.

Waiver of Notice of Proposed Rulemaking.

The regulatory changes made in this part merely reflect statutory changes made in title IV of the Higher Education Act, nonsubstantive organizational changes required by the incorporation of existing regulatory provisions from other regulations, or minor technical revisions. In addition, the Secretary wishes to give the program community as much advance notice as possible of these changes. Accordingly, the Secretary finds that publication of a proposed rule in this instance would be unnecessary, impracticable and contrary to the public interest within the meaning of 5 U.S.C. 533(b), and is publishing these rules as final regulations.

Dated: December 23, 1980.

(Catalogue of Federal Domestic Assistance Numbers: Pell Grant program, 84.063; Supplemental Educational Opportunity Grant Program, 84.007; State Student Incentive Grant program, 84.069; Guaranteed Student Loan Program, 84.032; College Work-Study Program, 84.033; National Direct Student Loan Program, 84.038)

Shirley M. Hufstedler,

Secretary of Education.

1. Part 668 of Title 34 of the Code of Federal Regulations is amended as follows:

(a) The table of sections and subparts is revised to read as follows:

PART 668—STUDENT ASSISTANCE GENERAL PROVISIONS

Subpart A—General

Sec.
668.1 Scope.
668.2 Public or private nonprofit institution of higher education.
668.3 Proprietary institution of higher education.
668.4 Postsecondary vocational institution.
668.5 Recognized equivalent of a high school diploma.
668.6 Ability to benefit.
668.7 One year training program.
668.8 Six month training program.
668.9 Civil rights requirements.
668.10 Criminal penalties.

Subpart B—Standards for Audits, Records, Financial Responsibility, Administrative Capability and Disposition of Refunds

668.11 Scope—Participation agreement.
668.12 Audits, records, and examinations.
668.13 Audit exceptions and repayments.
668.14 Financial aid transcript.
668.15 Factors of financial responsibility.
668.16 Standards of administrative capability.
668.17 Additional factors for evaluating administrative capability and financial responsibility.
668.18 Change in ownership and control.
668.19 Contracting for educational programs or courses.
668.20 Institutions stop providing educational instruction—Loss of eligibility.
668.21 Distribution formula for institutional refunds and repayments of cash disbursements made directly to the student.
668.22 Federal interest in title IV student assistance funds.

Subpart C—Student Consumer Information Services

668.31 Scope.
668.32 Definitions.
668.33 Preparation and dissemination of materials.
668.34 Financial assistance information.
668.35 Institutional information.
668.36 Availability of employees for information dissemination purposes.

Subparts D-E [Reserved]

Subpart F—Misrepresentation

Sec.
668.61 Scope.
668.62 Special definitions.
668.63 Nature of educational program.
668.64 Nature of financial charges.
668.65 Employability of graduates.
668.66 Endorsements and testimonials.
668.67 Procedures.

Subpart G—Fine, Limitation, Suspension and Termination Proceedings

668.71 Scope.
668.72 Definitions.
668.73 Informal compliance procedures.
668.74 Emergency action.
668.75 Fine proceedings.
668.76 Suspension proceedings.
668.77 Limitation or termination proceedings.
668.78 Initial and final decisions—appeals.
668.79 Verification of mailing and receipt dates.
668.80 Fines.
668.81 Limitation.
668.82 Termination.
668.83 Reimbursements, refunds, and offsets.
668.84 Reinstatement after termination.
668.85 Removal of a limitation.
Appendix A—[Reserved]
Appendix B—Standards for Audit of Governmental Organizations, Programs, Activities, and Functions (GAO)
Appendix C—Appendix I, Standards for Audit of Governmental Organizations, Programs, Activities, and Functions (GAO)

Authority: Sections 435, 481, 485, 487, 490 and 1201(a) of the Higher Education Act of 1965 as amended (20 U.S.C. 1085, 1088, 1092, 1094, 1097, and 1141(a)).

(b) Subpart A is revised to read as follows:

Subpart A—General

§ 668.1 Scope.

(a)(1) This part establishes general rules that apply to an institution of higher education or a vocational school that participates in any student financial assistance program authorized by title IV of the Higher Education Act of 1965 as amended. (title IV student assistance programs)

(2) As used in this part:

(i) An institution of higher education includes a public or private nonprofit institution as defined in § 668.2, a proprietary institution as defined in § 668.3, and a postsecondary vocational institution as defined in § 668.4, and

(ii) A vocational school is a school as defined in section 435(c) of the Higher Education Act of 1965 as amended. (20 U.S.C. 1085(c)).

(b) The title IV student assistance programs include—

(1) The Pell Grant Program previously known as the Basic Educational Opportunity Grant program (20 U.S.C. 1070a; 34 CFR Part 690);

(2) The Supplemental Educational Opportunity Grant Program (SEOG or Supplemental Grants—20 U.S.C. 1070b *et seq;* 34 CFR Part 676);

(3) The State Student Incentive Grant Program (SSIG—20 U.S.C. 1070c *et seq;* 34 CFR Part 692);

(4) The Guaranteed Student Loan Program (GSL—20 U.S.C. 1071 *et seq;* 34 CFR Part 682);

(5) The Parent Loans for Undergraduate Students Program (PLUS—20 U.S.C. 1078-2; 34 CFR Part 683);

(6) The College Work-Study Program (CWS—42 U.S.C. 2751 *et seq;* 34 CFR Part 675); and

(7) The National Direct Student Loan Program (NDSL—20 U.S.C. 1087aa *et seq;* 34 CFR Part 674);

(20 U.S.C. 1070 *et seq.*)

§ 668.2 Public or private nonprofit institution of higher education.

A "public or private nonprofit institution of higher education" is:

(a) An educational institution which—

(1) Is in a State;

(2) Admits as regular students only persons who—

(i) Have a high school diploma,

(ii) Have the recognized equivalent of a high school diploma, or

(iii) Are beyond the age of compulsory school attendance in the State in which the institution is located and, if the institution seeks to participate in a title IV student assistance program other than the GSL or PLUS program, have the ability to benefit from the training offered;

(3) Is legally authorized to provide an educational program beyond secondary education in the State in which the institution is physically located;

(4) Provides—

(i) An educational program for which it awards an associate, baccalaureate, graduate, or professional degree, or

(ii) At least a two-year program which is acceptable for full credit toward a baccalaureate degree, or

(iii) At least a one-year training program which leads to a certificate or degree and prepares students for gainful employment in a recognized occupation; and

(5) Is—

(i) Accredited by a nationally recognized accrediting agency or association,

(ii) Approved by a State agency recognized by the Secretary as a reliable authority on the quality of public postsecondary vocational education in its State, if the institution is a public postsecondary vocational educational institution,

(iii) An institution which has satisfactorily assured the Secretary that it will meet the accreditation standards of an approved agency or association within a reasonable time, considering the resources available to the institution, the period of time it has operated and its efforts to meet accreditation standards, or

(iv) An institution whose credits are determined by the Secretary to be accepted on transfer by at least three accredited institutions on the same basis as transfer credits from fully accredited institutions;

(b)(1) If an institution seeks to participate solely in the GSL or PLUS programs and cannot be accredited or approved because there is no nationally recognized accrediting agency or association qualified to accredit or approve that type of institution, the institution satisfies the requirement of paragraph (a)(5) of this section if it is approved by a committee appointed by the Secretary for that purpose in accordance with the standards of content, scope, and quality that the committee prescribes.

(2) An institution that has been approved by the Committee must, in order to remain an eligible school, become accredited within three years after the Secretary has designated a nationally recognized accrediting agency for the type of institution applying for eligibility.

(c) For the purpose of this definition, the Secretary publishes a list of nationally recognized accrediting agencies or associations and State approval agencies that the Secretary has determined to be reliable authority as to the quality of education or training offered.

(20 U.S.C. 1085, and 1141(a))

§ 668.3 Proprietary institution of higher education.

A "proprietary institution of higher education" is:

(a) An educational institution which—

(1) Is not a public or other nonprofit institution;

(2) Is in a State;

(3) Admits as regular students only persons who—

(i) Have a high school diploma,

(ii) Have the recognized equivalent of a high school diploma, or

(iii) Are beyond the age of compulsory school attendance in the State in which the institution is located and have the ability to benefit from the training offered;

(4) Is legally authorized to provide postsecondary education in the State in which it is physically located;

(5) Provides at least a six-month program of training to prepare students for gainful employment in a recognized occupation;

(6) Is accredited by a nationally recognized accrediting agency or association; and

(7) Has been in existence for at least two years. The Secretary considers a school to have been in existence for two years if it has been legally authorized to provide, and has provided, a continuous training program to prepare students for gainful employment in a recognized occupation during the 24 months (except for normal vacation periods) preceding the date of application for eligibility.

(b) For the purpose of this definition, the Secretary publishes a list of nationally recognized accrediting agencies or associations that the Secretary has determined to be reliable authority as to the quality of education or training offered.

(20 U.S.C. 1141(a), 20 U.S.C. 1088(b))

§ 668.4 Postsecondary vocational institution.

A "postsecondary vocational institution" is:

(a) A public or private nonprofit educational institution which—

(1) Is in a State;

(2) Admits as regular students only persons who—

(i) Have a high school diploma,

(ii) Have the recognized equivalent of a high school diploma, or

(iii) Are beyond the age of compulsory school attendance in the State in which the institution is located and have the ability to benefit from the training offered;

(3) Is legally authorized to provide an educational program beyond secondary education in the State in which the institution is physically located;

(4) Provides at least a six-month program of training to prepare students for gainful employment in a recognized occupation;

(5) Is—

(i) Accredited by a nationally recognized accrediting agency or association,

(ii) Approved by a State agency recognized by the Secretary as a reliable authority on the quality of public postsecondary vocational education in its State, if the institution is a public postsecondary vocational educational institution,

(iii) An institution which has satisfactorily assured the Secretary that it will meet the accreditation standards of an approved agency or association within a reasonable time, considering the resources available to the institution, the period of time it has operated and its efforts to meet accreditation standards, or

(iv) An institution whose credits are determined by the Secretary to be accepted on transfer by at least three accredited institutions on the same basis as transfer credits from fully accredited institutions;

(6) Has been in existence for at least two years. The Secretary considers an institution to have been in existence for two years if it has been legally authorized to provide, and has provided, a training program on a continuous basis to prepare students for gainful employment in a recognized occupation during the 24 months (except for normal vacation periods) preceding the date of application for eligibility.

(b) For the purposes of this definition the Secretary publishes a list of nationally recognized accrediting agencies or associations and State approval agencies that the Secretary has determined to be reliable authority as to the quality of education or training offered.

(20 U.S.C. 1141(a), 20 U.S.C. 1088)

§ 668.5 Recognized equivalent of a high school diploma.

The "recognized equivalent of a high school diploma" is—

(a) A General Education Development (GED) Certificate, or

(b) A State certificate received by a student after the student has passed a State authorized examination, which that State recognizes as the equivalent of a high school diploma.

(20 U.S.C. 1141(a))

§ 668.6 Ability to benefit.

(a) "Ability to benefit" means that a person admitted to an institution of higher education has the ability to benefit from the education or training he or she is to receive.

(b)(1) An institution that admits as regular students persons who do not have a high school diploma or the recognized equivalent of a high school diploma and who are beyond the age of compulsory school attendance in the State in which the institution is located, shall develop and consistently apply criteria for determining whether these students have the ability to benefit from the education or training offered.

(2) An institution must be able to demonstrate, upon request of the Secretary, that these students have the ability to benefit.

(20 U.S.C. 1088, 1141)

§ 668.7 One year training program.

A "one year training program" is a program which is at least—

(a) 24 semester or trimester hours or units, or 36 quarter hours or units at an institution using credit hours or units to measure progress;

(b) 900 clock hours of supervised training at an institution using clock hours to measure progress; or

(c) 900 hours of preparation in a correspondence program.

(20 U.S.C. 1141(a))

§ 668.8 Six month training program.

(a) A "six month training program" is a program which is at least—

(1) 16 semester or trimester hours or units, or 24 quarter hours or units, at an institution using credit hours or units to measure progress;

(2) 600 clock hours of supervised training at an institution using clock hours to measure progress;

(3) 600 hours of preparation in a correspondence program.

(b) In lieu of the credit or clock hour requirements of paragraphs (a)(1) or (a)(2) of this section, the Secretary may determine that an institution offers a six-month training program if—

(1) The accrediting association that accredits the institution certifies that the program offered by the institution is equal in course content and student work load to the comparable clock or credit hour program described in paragraphs (a)(1) or (a)(2) of this section, and

(2) the Secretary determines that the institution's course content and student work load requirements support that determination.

(20 U.S.C. 1088)

§ 668.9 Civil rights requirements.

An institution participating in any title IV program must comply with the following civil rights statutes and regulations.

Subject	Statute	Regulation
Discrimination on the basis of race, color or national origin.	Title VI of the Civil Rights Act of 1964 (42 U.S.C. 2000d through 2000d-4).	34 CFR Part 100.
Discrimination on the basis of sex.	Title IX of the Education Amendments of 1972 (20 U.S.C. 1681-1683).	34 CFR Part 106.
Discrimination on the basis of handicap.	Section 504 of the Rehabilitation Act of 1973 (29 U.S.C. 794).	34 CFR Part 104.
Discrimination on the basis of age.	The Age Discrimination Act (42 U.S.C. 6101 *et seq.*).	

§ 668.10 Criminal penalties.

Section 490 of the Higher Education Act of 1965 provides as follows:

(a)(1) Any person who knowingly and willfully embezzles, misapplies, steals, or obtains by fraud, false statement, or forgery any funds, assets, or property provided or insured under any title IV student assistance program shall be fined not more than $10,000 or imprisoned for not more than five years, or both.

(2) However if the amount so embezzled, misapplied, stolen, or obtained by fraud, false statement, or forgery does not exceed $200, the fine shall not be more than $1,000 and imprisonment shall not exceed one year, or both.

(b) Any person who knowingly and willfully makes any false statement, furnishes any false information, or conceals any material information in connection with the assignment of a loan which is made or insured under this title shall, upon conviction thereof, be fined not more than $1,000 or imprisoned not more than one year, or both.

(c) Any person who knowingly and willfully makes an unlawful payment to an eligible lender under the GSL or PLUS programs as an inducement to make, or to acquire by assignment, a loan insured under one of those programs shall, upon conviction thereof, be fined not more than $1,000 or imprisoned not more than one year, or both.

(d) Any person who knowingly and willfully destroys or conceals any record relating to the provision of assistance under any title IV student assistance program with intent to defraud the United States or to prevent the United States from enforcing any right obtained by subrogation under this part, shall, upon conviction thereof, be fined not more than $10,000 or imprisoned not more than five years, or both.

(20 U.S.C. 1097)

(c) Subpart B is revised to read as follows:

Subpart B—Standards for Audits, Records, Financial Responsibility, Administrative Capability and Disposition of Refunds

§ 668.11 Scope—Participation agreement.

(a) This subpart applies to an education institution that satisfies the definition of:

(1) A public or private nonprofit institution of higher education set forth in § 668.2;

(2) A proprietary institution of higher education set forth in § 668.3;

(3) A postsecondary vocational institution set forth in § 668.4; and

(4) A vocation school set forth in section 435(c) of the Higher Education Act.

(b) This subpart describes standards that an institution referred to in paragraph (a) of this section must meet in order to participate in any title IV student assistance program. These standards concern the conduct of audits, the maintenance of records, financial responsibility, administrative capability, and the distribution of institutional refunds.

(c) Noncompliance with these provisions may subject an institution to proceedings under Subpart G. These procedures may lead to a fine or a limitation, suspension, or termination of the institution's eligibility to participate in any or all of the title IV student assistance programs.

(d) *Institutional participation agreement.* (1) An eligible institution must enter into a written agreement with the Secretary, on a form approved by the Secretary, in order to participate in any of the title IV student assistance programs other than the State Student Incentive Grant Program.

(2) This agreement conditions the initial and continued eligibility of the institution to participate in the title IV student assistance programs upon compliance with the provisions of this part and the individual program requirements.

(20 U.S.C. 1094)

§ 668.12 Audits, records and examination.

(a) If an institution participates in the National Direct Student Loan (34 CFR Part 674), College Work-Study (34 CFR Part 675), Supplemental Educational Opportunity Grant (34 CFR Part 676), Guaranteed Student Loan (34 CFR Part 682), the Parent Loans for Undergraduate Students (34 CFR Part 683), or Pell Grant (34 CFR Part 690) Programs, it shall comply with the regulations for those programs concerning (1) fiscal and accounting systems, (2) biennial audits of institutional transactions, (3) program and fiscal recordkeeping, and (4) record retention.

(b)(1) Any individual who conducts an audit must be sufficiently independent of those authorizing the expenditure of Federal funds to produce unbiased opinions, conclusions, or judgments. The independence of this individual shall be judged by the criteria set forth in part III, chapter 3 of the U.S. General Accounting Office publication *Standards for Audit of Governmental Organizations, Programs, Activities, and Functions.* Additionally, auditors other than employees of a State or local government shall meet the qualifications criteria set forth in appendix I of the GAO document. (These documents are included as Appendices B and C of this part.)

(2) The institution must provide that any individual or firm conducting an audit described in this section shall give the Education Department's Inspector General or the Secretary access to records or other documents necessary to review the results of the audit.

(3) Upon written request, an institution shall give the Secretary access to all program and fiscal records, including records reflecting transactions with any financial institution with which it deposits or has deposited any title IV funds.

(c)(1) With respect to each student recipient of title IV financial aid, an institution shall establish and maintain on a current basis records regarding—

(i) The student's admission to, and enrollment status at, the institution;

(ii) The program and courses in which the student is enrolled;

(iii) Whether—according to the written standards and practices of the institution—the student is making satisfactory progress toward completion of his or her course of study;

(iv) Any refunds due or paid the student;

(v) The student's placement by the institution in a job if the institution provides a placement service and the student uses that service; and

(vi) The student's receipt of financial aid (see § 668.14).

(2)(i) An otherwise eligible institution shall establish and maintain records regarding the educational qualifications of each regular student, whether or not the student receives title IV aid, which are relevant to the institution.

(ii) An institution where only certain programs have been determined eligible shall establish and maintain records regarding the admissions requirements and educational qualifications of each regular student enrolled in the eligible program(s) whether or not the student received title IV aid.

(3) Records shall be—

(i) Systematically organized; and

(ii) Readily available for review by the Secretary at the geographical location where the students will receive their degrees or certificates of program or course completion.

(20 U.S.C. 1094.)

§ 668.13 Audit exceptions and repayments.

(a)(1) If—as a result of its own audit or an audit performed at the direction of the institution—the Education Department's Inspector General

questions an expenditure or the institution's compliance with an applicable requirement, the Inspector General notifies the Secretary and the institution of the questioned expenditure or procedure.

(2) If the institution believes that the questioned expenditure or procedure was proper, it shall notify the Secretary in writing of its position and the reasons for its position.

(3) The institution's response must be received by the Secretary within 35 days of the date of the audit agency's notification to the institution.

(b)(1) Based on the audit finding and the institution's response, the Secretary determines the amount of funds improperly spent, if any, and instructs the institution as to the manner or repayment.

(2) The institution shall repay those funds within 60 days of the date of the Secretary's notification, unless the Secretary permits a longer repayment period.

(20 U.S.C. 1094.)

§ 668.14 Financial aid transcript.

(a)(1) *Disbursing money only after receiving a transcript—general rule.* If informed by a student that he or she attended another eligible institution on at least a half-time basis, the institution the student is currently attending shall not disburse any title IV funds (other than Guaranteed Student Loan and Parent Loans for Undergraduate Students checks where the institution is not the lender) to that student before obtaining a properly signed financial aid transcript from the institution or institutions the student previously attended, unless the other institution or institutions each indicate, in writing that they are not required to provide a transcript under the provisions of paragraph (b) or paragraph (c)(2) or (c)(3) of this section. The student's current institution may disburse title IV funds on the basis of such a written notice or notices.

(2) *Limited exception to the general rule.* The institution the student is currently attending may disburse title IV funds to a student for one payment period if it does not receive in a timely manner the requested transcript or a written notice that the transcript will not be forthcoming as provided in paragraph (d) of this section.

(b) *Providing a transcript—general rule.* (1) Upon request, an institution shall provide to another institution a financial aid transcript for a current or former student who received, while attending the institution—

(i) A Pell Grant during the award period in which the request for the transcript is made;

(ii) A Supplemental Grant; or

(iii) A National Direct Student Loan.

(2) The institution shall honor a request for a transcript from a student or the institution the student is attending or planning to attend.

(3) The institution shall provide the transcript in a timely manner.

(4) The transcript must be signed by an official authorized by the institution to sign such transcripts.

(c) *Exceptions to the general rule in paragraph (b) of this section.* An institution does not have to provide the requested transcript if—

(1) The subject student—

(i) Is in default on any title IV loan made or received for attendance at that institution; or

(ii) Owes a refund on any title IV grant received for attendance at that institution;

(2) The transcript would only include information based on records that the institution is no longer required to keep under the record retention regulations referred to under § 668.12(a); or

(3) The institution participates in the Pell Grant Program under the Alternate Disbursement System and does not also participate in the Supplemental Grant or National Direct Student Loan program in the award period in which the request for the transcript is received.

(d) *Notifying the student's new institution in a timely manner that the transcript is not forthcoming.* If an institution has been requested to provide a transcript but is not required to do so according to paragraph (b) or paragraph (c) of this section, it must notify the student's new institution in writing in a timely manner that the transcript will not be forthcoming and specify the reason for the refusal.

(e) *Information included in a student's financial aid transcript.* A student's financial aid transcript shall include, with respect to any year for which the institution is required to keep that student's financial aid records, at least the following information—

(1) The student's name and social security number;

(2) Whether the student received a Supplemental Grant in any award year;

(3) For the award period in which the request for the transcript is made,

(i) the student's Scheduled Pell Grant and the amount of Pell Grant funds disbursed to the student.

(ii) The amount of Supplemental Grants disbursed to the student;

(4) The amount of National Direct Student Loans advanced to the student during each award year;

(5) Whether the student is in default on—

(i) A National Direct Student Loan made by the institution, or

(ii) A Guaranteed Student Loan or a Parent Loan for Undergraduate Students the student received for attendance at the institution if the institution is aware of the default status, and

(6) Whether the student owes a refund on—

(i) A Pell or Supplemental Grant for attendance at the institution, or

(ii) A State Student Incentive Grant received for attendance at the institution, if the institution is aware that the student owes the refund.

(20 U.S.C. 1091, 1094.)

§ 668.15 Factors of financial responsibility.

(a) An institution is financially responsible if it is able to—

(1) Provide the educational services stated in its official publications and statements;

(2) Provide the administrative resources necessary to comply with the requirements of this subpart; and

(3) Meet all its financial obligations including refunds.

(b) The Secretary considers that an institution is not financially responsible if—

(1) Under a cash or accrual system of accounting, it—

(i) Has a history of operating losses, or

(ii) Had, for its latest fiscal year, a deficit net worth. A deficit net worth occurs when the institution's liabilities exceed its assets; or

(2) Under an accrual system of accounting, it had at the end of its latest fiscal year, a ratio of current assets to current liabilities of less than 1:1; or

(3) Under a fund accounting system its unrestricted current or operating fund reflects a history of sustained material deficits.

(c) The Secretary determines that an institution is financially responsible under paragraphs (a) and (b) of this section by evaluating documents submitted by the institution. Upon request of the Secretary, the institution must submit for its *latest* complete fiscal year—

(1) A statement of profit and loss and a balance sheet, or for fund accounting, a fund statement; or

(2) An audit prepared by a State or local audit agency for a public institution; or

(3) A certified audit prepared by a certified or licensed public accountant for a non-public institution.

(d) The Secretary may determine that an institution is financially responsible

even though it does not appear so under paragraphs (a), (b) and (c) of this section. To enable the Secretary to make this determination, the Secretary may request the institution to submit for its *current* fiscal year—

(1) (i) A statement of profit and loss and a balance sheet, or for fund accounting, a fund statement, or

(ii) An audit prepared by a State or local audit agency for a public institution; or

(iii) A certified audit prepared by a certified or licensed public accountant for a non-public institution; and

(2) Other appropriate documents that will demonstrate to the Secretary that it has sufficient financial responsibility and capability to continue to participate in the title IV programs in spite of its inability to meet the requirements of paragraphs (a), (b), and (c) of this section.

(e)(1) The Secretary may require that the statement of profit and loss, balance sheet and fund statement referred to in paragraphs (c)(1) and (d)(1) of this section be audited and certified by a certified public accountant.

(2) If the Secretary requires an institution to submit under paragraphs (c) and (d) of this section a statement of profit and loss a balance sheet, a fund statement or an audit, the Secretary may also require the institution to submit the accountant's notes for that work which must be audited and certified by a certified public accountant.

(f)(1)(i) An otherwise eligible institution shall obtain and keep current adequate fidelity bond coverage in order to protect the Government's interest in the title IV funds it receives as a trustee.

(ii) However, a public institution that is bonded by the State against the type of losses described in paragraph (f)(2) of this section does not have to obtain additional fidelity bond coverage.

(2) A fidelity bond indemnifies the holder against losses resulting from fraud of lack of integrity, honesty, or fidelity of one or more of its employees or officers.

(3) Any bond required under this paragraph shall be obtained from companies holding certificates of authority as acceptable sureties (31 CFR Part 223). A list of these companies is published annually by the Department of the Treasury in its Circular 570.

(20 U.S.C. 1094.)

§ 668.16 Standards of administrative capability.

To participate in a title IV student financial aid program, an institution must be able to adequately administer those programs. The Secretary considers an institution to have that capability if it establishes and maintains required student and financial records and if it—

(a) Designates a capable individual to be responsible for—

(1) Administering all the title IV student assistance programs in which it participates, and

(2) Coordinating the title IV programs with the institution's other Federal and non-Federal programs of student financial assistance;

(b) Communicates to the individual designated to be responsible for administering title IV programs, all the information received by any institutional office that bears on a student's title IV eligibility.

(c) Uses an adequate number of qualified persons to administer those programs. In determining whether an institution uses an adequate number of qualified persons, the Secretary considers the number of students aided, the number and types of programs in which the institution participates, the number of applications evaluated, the amount of funds administered, and the financial aid delivery system used by the institution;

(d)(1) Administers title IV programs with adequate checks and balances in its system of internal controls, and

(2) Divides the functions of authorizing payments and disbursing funds so that no office has responsibility for both functions with respect to any particular student aided under the programs;

(e) Establishes, publishes, and applies, reasonable standards for measuring whether a student receiving aid under any title IV program is maintaining satisfactory progress in his or her course of study;

(f) Develops an adequate system to verify the consistency of the information it receives from different sources with respect to a student's application for financial aid under title IV programs. In determining whether the institution has an adequate verification system, the Secretary considers whether the institution reviews—

(1) All student aid applications, need analysis documents, statements of educational purpose, and eligibility notification documents presented by or on behalf of each applicant,

(2) Any documents, including any copies of State and Federal Income Tax returns, that are normally collected by the institution to validate information received from other sources, and

(3) Any other information normally available to the institution regarding a student's citizenship, previous educational experience or other factors relating to the student's eligibility for title IV funds; and

(g) Provides adequate financial aid counseling to eligible students who apply for title IV aid. In determining whether an institution provides adequate counseling, the Secretary considers whether its counseling includes information regarding—

(1) The source and amount of each type of aid offered.

(2) The method by which aid is determined and disbursed or applied to a student's account, and

(3) The rights and responsibilities of the student with respect to enrollment at the institution and receipt of financial aid. This information includes the institution's refund policy, its standards of satisfactory progress, and other conditions that may alter the student's aid package.

(20 U.S.C. 1094.)

§ 668.17 Additional factors for evaluating administrative capability and financial responsibility.

(a) The Secretary considers that loan default and withdrawal rates may impair an institution's capability of properly administering student financial aid programs authorized under title IV if—

(1) The default rate on Guaranteed Student Loans, Parent Loans for Undergraduate Students or National Direct Student Loans made to students for attendance at that institution exceeds 20 percent of the principal of all those loans that have reached the repayment period; or

(2) For an institution that has a common academic year for a majority of its students, more than 33 percent of the regular students who are enrolled at the beginning of an academic year withdraw from enrollment at that institution during that academic year; or

(3) For an institution which does not have a common academic year for a majority of its students, more than 33 percent of the regular students enrolled at the beginning of any 8-month period withdraw during that period.

(b)(1) If the default or withdrawal rates for an institution are as high as or higher than the rates set forth in paragraph (a), of this section and the Secretary believes that these rates impair the institution's administrative capability, the Secretary may require the institution to submit for its *latest complete* fiscal year a profit and loss statement, balance sheet or audit.

(2) An audit must be—

(i) Prepared by a State or local audit agency for a public institution, or

(ii) Prepared by a certified public accountant or licensed public accountant for a nonpublic institution;

(3) The date of the statement's preparation shall be within 12 months of the date of the Secretary's request.

(c) The Secretary may require that the profit and loss statement and balance sheet referred to in paragraph (b)(1) of this section be audited and certified by a certified public accountant.

(d)(1) If the Secretary determines that the loan default or withdrawal rates for an institution impairs its capability to administer any financial aid program authorized under title IV, the Secretary requires the institution to take reasonable and appropriate measures to alleviate those conditions as a requirement for its continued participation in those programs.

(2) Before initiating that action, the Secretary informs the institution of the findings and provides it at least 35 days to respond.

(3) The institution may respond by—

(i) Demonstrating that the conditions do not have an adverse effect on the administration of the programs, or

(ii) Submitting a plan of the action it will take to alleviate those conditions.

(20 U.S.C. 1094)

§ 668.18 Change in ownership or control.

(a) An eligible institution, or a previously eligible institution that participated in any title IV student assistance program, that changes ownership resulting in a change in control is not considered by the Secretary to be the same institution unless—

(1) The new owner agrees to be liable, or the old and new owners agree to be jointly and severally liable, for all improperly spent title IV funds provided to the institution before the effective date of the change;

(2) The new owner agrees—

(i) To abide by the institution's refund policy in effect before the effective date of the change for students who were enrolled before the effective date, and

(ii) To honor all student enrollment contracts that were signed by the institution before the effective date of the change; and

(3) The institution submits individual statements for both new and former owners listing their assets, liabilities, and net worth, and either—

(i) A profit and loss statement and balance sheet for the institution's latest complete fiscal year, or

(ii) An audit for the institution's latest complete fiscal year prepared by a certified or licensed public accountant; and

(4) The institution submits additional financial documents if requested by the Secretary because the financial information provided in subparagraph (3) of this paragraph is insufficient.

(b) The Secretary may require that the statements provided in paragraphs (a)(3)(i) and (a)(3)(ii) of this section be audited and certified by a certified public accountant.

(c) For purposes of this subpart, "change in ownership that results in a change in control," means any action by which a person or corporation obtains authority to control the actions of an institution. These actions may include, but are not limited to—

(1) The transfer of the controlling interest of stock of an institution to its parent corporation;

(2) The merger of two or more institutions;

(3) The division of one institution into two or more institutions;

(4) The transfer of the assets of an institution to its parent corporation; or

(5) The transfer of the liabilities of an institution to its parent corporation.

(20 U.S.C. 1094)

§ 668.19 Contracting for educational programs or courses.

(a) An institution may, without losing its eligibility to participate in any title IV student assistance program, enter into a written contract or agreement to have a portion of its educational programs provided by another institution, school, or organization if the written contract or agreement satisfies the requirements of paragraphs (b) and (c) of this section.

(b) The otherwise eligible institution must give credit to students in the contracted portion portion of the program on the same basis as if it provided the portion of the program itself.

(c) The otherwise eligible institution must enter into a contract with—

(1) Another eligible institution; or

(2) An ineligible institution, school or organization if:

(i) The contracted portion of the program does not exceed 25 percent of the student's total program of study; or

(ii) The otherwise eligible institution's accrediting agency, or State agency for the approval of public postsecondary vocational education, determines that its contractual arrangement meets the agency's standards for contracting for educational services.

(20 U.S.C. 1094.)

§ 668.20 Institutions stop providing educational instruction—loss of eligibility.

(a) When an institution stops providing educational instruction or loses eligibility it shall—

(1) Notify the Secretary of that fact;

(2) Refund to the Federal government, or otherwise dispose of by instructions from the Secretary, any unobligated title IV funds it has received, except—

(i) Those funds it has committed but not yet paid to students in that payment period, and

(ii) Its administrative allowance, if applicable;

(3) Submit to the Secretary within 45 days after the effective date of closing or loss of eligibility—

(i) All financial, performance, and other reports required by each appropriate title IV program regulation, and

(ii) An audit of all title IV funds it received;

(4) Inform the Secretary of the arrangements it has made for the proper retention and storage of all records concerning the administration of title IV programs. These records must be retained for a minimum of five years;

(5) Inform the Secretary of how it will provide for the collection of any outstanding title IV student loans; and

(6) Make refunds of unearned tuition and fees according to § 668.21 of this subpart.

(20 U.S.C. 1094.)

§ 668.21 Distribution formula for institutional refunds and repayments of cash disbursements made directly to the student.

(a) *Institutional refunds to title IV programs.* (1) If a refund is due to a student under the institution's refund policy and the student received financial aid under any title IV student financial aid program other than the College Work-Study Program, a portion of the refund shall be returned to the title IV student assistance program(s).

(2) Except as provided in paragraph (a)(3) of this section the institution shall multiply the institutional refund by the following fraction to determine the portion of the refund to be returned to the title IV program(s):

$$\frac{\text{total amount of title IV aid (exclusive of work earnings) awarded for the payment period}}{\text{total amount of aid (exclusive of work earnings) awarded for the payment period}}$$

(3) If a student has received Pell Grant funds at the institution under the Alternate Disbursement System,

(i) The institution shall use the following fraction in lieu of the fraction in paragraph (a)(2) of this section to determine the portion of the refund to be returned to the title IV programs (other than the Pell Grant program.)

$$\frac{\text{total amount of title IV aid (exclusive of work earnings and Pell Grant funds) awarded for the payment period}}{\text{total amount of aid (exclusive of work earnings and Pell Grant funds) awarded for the payment period}}$$

(ii) the institution shall notify the Secretary of the amount of money that it is returning to the title IV program according to paragraph (a)(3)(i) of this section.

(b) *Distribution among the title IV programs.* (1) The institution shall develop written policies allocating the title IV portion of the refund to the various title IV programs from which the student received aid. These policies shall be applied on a consistent basis to all students receiving title IV funds.

(2) The portion of a refund allocated to a program may not exceed the amount a student received from that program.

(3) As provided in 34 CFR 682.610 of the Guaranteed Student Loan Program regulations and 34 CFR 683.85 of the Parent Loans for Undergraduate Students Program regulations, the institution shall return to the student's lender any portion of a refund which is allocable to a loan made under the Guaranteed Student Loan Program or the Parent Loans for Undergraduate Students Program.

(c) *Distribution of repayments of cash disbursements made directly to the student for non-institutional costs.* (1) Any cash that an institution disbursed to a student for a payment period under any title IV program other than the College Work-Study, Guaranteed Student Loan or Parent Loans for Undergraduate Students Program becomes an overpayment if before the first day of classes of that payment period the student officially withdraws, drops out, or is expelled.

(2) An institution shall determine, under paragraph (c)(3) of this section, whether any cash it disbursed to a student for a payment period under any title IV program other than the College Work-Study, Guaranteed Student Loan or Parent Loans for Undergraduate Students program amounts to an overpayment if the student withdraws, drops out, or is expelled on or after the first day of classes of that payment period.

(3) In determining whether a student received an overpayment for purposes of paragraph (c)(2) of this section, and the amount of that overpayment, the institution shall subtract from the cash disbursed to the student for non-institutional costs, the non-institutional costs that were to be paid by the disbursement for the portion of the payment period during which the student was enrolled. Non-institutional educational costs may include, but are not limited to, room and board (if not contracted for with the institution), books and supplies, transportation and miscellaneous expenses.

(4) If a student drops out, the institution shall use the last recorded day of class attendance by the student as the end of the student's enrollment. However, if it is unable to document the student's last day of attendance, any cash it disbursed to that student for that payment period is an overpayment.

(5) The institution shall multiply the overpayment by the following fraction to determine the portion of the overpayment to be returned to the title IV program(s):

$$\frac{\text{total amount of title IV aid (exclusive of work earnings and GSL and PLUS loans) awarded for the payment period—}}{\text{total amount of aid (exclusive of work earnings and GSL and PLUS loans) awarded for the payment period.}}$$

(d) *Distribution among the title IV programs.* (1) The institution shall develop written policies allocating the title IV portion of the overpayment owed by the student to the various title IV programs from which the student received aid. These policies shall be applied on a consistent basis to all students receiving title IV aid.

(20 U.S.C. 1094)

§ 668.22 Federal interest in title IV student assistance program funds.

(a) Except for funds received for the administrative cost allowance, funds received by an institution under—

(1) The Pell Grant Program (Regular Disbursement System),

(2) The Supplemental Educational Opportunity Grant Program,

(3) The College Work-Study Program, and

(4) The National Direct Student Loan Program, are held in trust for the intended student beneficiaries. The institution, as a trustee of Federal funds, may not use or hypothecate (i.e., use as collateral) title IV funds for any other purpose.

(b) An institution's administrative cost allowance is established for the Pell Grant Program, the Supplemental Educational Opportunity Grant Program, the College Work-Study Program, and the National Direct Student Loan Program by section 489 of the Higher Education Act of 1965.

(20 U.S.C. 1070 *et seq.*; 20 U.S.C. 1096)

(d) Subpart C is added to read as follows:

Subpart C—Student Consumer Information Services

§ 668.31 Scope.

Each institution participating in any student financial assistance program authorized under title IV of the Higher Education Act, including the Pell Grant Program under the Alternate Disbursement System (ADS), shall disseminate to all enrolled students, and to prospective students upon request through appropriate publications and mailings, information concerning—

(a) The institution (see § 668.35) and

(b) Any student financial assistance available to students enrolled in the institution (see § 668.34).

(20 U.S.C. 1092).

§ 668.32 Definitions.

As used in this subpart:

Act means Title IV of the Higher Education Act (HEA) of 1965, as amended.

Award year means the period of time between July 1 of one year and June 30 of the following year.

Prospective student means any individual who has contacted an institution participating in a title IV student financial assistance program for the purpose of requesting information concerning admission to the institution.

(20 U.S.C. 1092).

§ 668.33 Preparation and dissemination of materials.

For each award year in which it participates in a title IV student assistance program, an institution shall—

(a) If necessary, prepare and publish material covering the topics set forth in § 668.34 and § 668.35,

(b) Make such material available through appropriate publications and mailings to—

(1) All currently enrolled students, and

(2) Any prospective student upon request of that student.

(20 U.S.C. 1092).

§ 668.34 Financial assistance information.

(a)(1) The information on financial assistance that the institution must publish and make readily available to current and prospective students shall include, but is not limited to, a description of all the Federal, State, local, private and institutional student financial assistance programs available to students who enroll at that institution.

(2) These programs include both need-based and non-need-based programs.

(3) The institution may describe its own financial assistance programs by listing them in general categories.

(b) For each program discussed in paragraph (a) of this section, the information provided by the institution shall describe—

(i) The procedures and forms by which students apply for assistance,

(ii) The student eligibility requirements,

(iii) The criteria for selecting recipients from the group of eligible applicants, and

(iv) The criteria for determining the amount of a student's award;

(c) The institution shall describe the rights and responsibilities of students receiving financial assistance and specifically assistance under the Pell Grant, Supplemental Educational Opportunity Grant, State Student Incentive Grant, College Work-Study, National Direct Student Loan, Guaranteed Student Loan, and Parent Loans for Undergraduate Students Programs. This description shall include specific information regarding—

(1) Criteria for continued student eligibility under each program;

(2)(i) Standards which the student must maintain in order to be considered to be making satisfactory academic progress in his or her course of study for the purpose of receiving financial assistance payments, and

(ii) Criteria by which the student who has failed to maintain satisfactory academic progress may re-establish his or her eligibility for financial assistance payments;

(3) The method by which financial assistance payments will be made to the student and the frequency of such payments;

(4) The terms of any loan received by a student as part of the student's financial assistance package, a sample loan repayment schedule for sample loans and the necessity for repaying loans; and

(5) The general conditions and terms applicable to any employment provided to a student as part of the student's financial assistance package.

(20 U.S.C. 1092).

§ 668.35 Institutional information.

(a) The institutional information that the institution must publish and make readily available to current and prospective students shall include, but is not limited to information on the following subjects:

(1) The cost of attending the institution, including—

(i) Tuition and fees charged to full-time and part-time students;

(ii) Estimates of necessary books and supplies;

(iii) Estimates of typical charges for room and board;

(iv) Transportation costs for commuting students or for students living on or off-campus, and

(v) Any additional cost of a program in which the student is enrolled or expresses a specific interest;

(2) A statement of the refund policy of the institution for the return of unearned tuition and fees or other refundable portion of costs paid to the institution;

(3) A statement of the institution's policies regarding any refund due to the title IV student assistance programs as required by § 668.21;

(4) The academic program of the institution, including—

(i) The current degree programs and other educational and training programs,

(ii) The instructional, laboratory, and other physical facilities which relate to the academic program; and

(iii) The institution's faculty and other instructional personnel;

(5) The names of associations, agencies or governmental bodies which accredit, approve or license the institution and its programs and the procedures by which the documents describing that activity may be reviewed under paragraph (b) of this section.

(6) A description of any special facilities and services available to handicapped students;

(7) A discussion of whether instructional or other physical facilities are readily accessible by handicapped students; and

(8) The titles of persons designated under § 668.36 and information regarding how and where such persons may be contacted.

(b) The institution shall make available for review to any current or prospective student, upon request, a copy of the documents describing the institution's accreditation, approval or licensing.

(20 U.S.C. 1092)

§ 668.36 Availability of employees for information dissemination purposes.

(a) *Availability.* (1) Except as provided in paragraph (b) of this section, each institution shall designate an employee or group of employees who shall be available on a full-time basis to assist current students or prospective students in obtaining the information specified in § 668.34 and § 668.35.

(2) If the institution designates one person, that person shall be available, upon reasonable notice, to any current or prospective students throughout the normal working hours of that institution.

(3) If more than one person is designated, their combined work schedules shall be arranged so that at least one of them is available, upon reasonable notice, throughout the normal administrative working hours of that institution.

(b) *Waiver.* (1) The Secretary may waive the requirement that the employee or group of employees designated under paragraph (a) of this section be available on a full-time basis if the institution's total enrollment, or the portion of the enrollment participating in any title IV student assistance program, is too small to necessitate an employee or group of employees being available on a full-time basis.

(2) In determining whether an institution's total enrollment or the number of title IV recipients is too small, the Secretary will consider whether there will be an insufficient demand for information dissemination services among its current students or prospective students to necessitate the full-time availability of an employee or group of employees.

(3) To receive a waiver, the institution must apply to the Secretary at the time and in the manner prescribed by the Secretary.

(c) The granting of a waiver under paragraph (b) of this section does not exempt an institution from designating a specific employee or group of employees to carry out on a part-time basis the information dissemination requirements.

(20 U.S.C. 1092)

(e) Subparts D and E are reserved.

(f) Subpart C is redesignated as Subpart F and is revised to read as follows:

Subpart F—Misrepresentation

§ 668.61 Scope

(a) This subpart applies to an institution listed in § 668.11(a) of these regulations.

(b) This subpart establishes the standards and rules by which the Secretary may initiate a fine or suspension or termination proceedings against an otherwise eligible institution for any substantial misrepresentation made by that institution regarding the nature of its educational program, its financial charges, or the employability of its graduates.

(20 U.S.C. 1094)

§ 668.62 Special definitions.

"Misrepresentation" means any false, erroneous, or misleading statement an otherwise eligible institution makes to a student enrolled at the institution, to any prospective student, to the family of an enrolled or prospective student, or to the Secretary.

"Prospective student" means any individual who has contacted an otherwise eligible institution for the purpose of requesting information about enrolling at the institution or who has been contacted directly by the institution—or indirectly through general advertising—about enrolling at the institution.

"Substantial misrepresentation" means any misrepresentation on which the person to whom it was made could reasonably be expected to rely, or has reasonably relied, to that person's detriment.

(20 U.S.C. 1094)

§ 668.63 Nature of educational program.

Misrepresentation by an institution of the nature of its educational program includes, but is not limited to, false, erroneous, or misleading statements concerning—

(a) The particular type(s), specific source(s), nature, and extent of its accreditation;

(b) Whether a student may transfer course credits earned at the institution to any other institution;

(c) Whether successful completion of a course of instruction qualifies a student for—

(1) Acceptance into a labor union or similar organization, or

(2) Receipt of a local, State, or Federal license or nongovernmental certification required as a precondition for employment or to perform certain functions;

(d) Whether its courses are recommended—

(1) By vocational counselors, high schools, or employment agencies, or

(2) By government for government employment;

(e) Its size, location, facilities, or equipment;

(f) The availability, frequency, and appropriateness of its courses and programs to the employment objectives that it states its programs are designed to meet;

(g) The nature, age, and availability of its training devices or equipment and their appropriateness to the employment objectives that it states its programs and courses are designed to meet;

(h) The number, availability, and qualifications, including the training and experience, of its faculty and other personnel;

(i) The availability of part-time employment or other forms of financial assistance;

(j) The nature and availability of any tutorial or specialized instruction, guidance, and counseling, or other supplementary assistance it will provide its students before, during, or after the completion of a course; or

(k) The nature or extent of any prerequisities established for enrollment in any course.

(20 U.S.C. 1094)

§ 668.64 Nature of financial charges.

Misrepresentation by an institution of the nature of its financial charges includes, but is not limited to, false, erroneous, or misleading statements concerning—

(a) Offers of scholarships to pay all or part of a course charge, unless a scholarship is actually used to reduce tuition charges made known to the student in advance. The charges made known to the student in advance are the charges applied to all students not receiving a scholarship; or

(b) Whether a particular charge is the customary charge at the institution for a course.

(20 U.S.C. 1094)

§ 668.65 Employability of graduates.

Misrepresentation by an institution regarding the employability of its graduates includes, but is not limited to, false, erroneous, or misleading statements—

(a) That the institution is connected with any organization or is an employment agency or other agency providing authorized training leading directly to employment;

(b) That the institution maintains a placement service for graduates or will otherwise secure or assist its graduates to obtain employment, unless it provides the student with a clear and accurate description of the extent and nature of this service or assistance; or

(c) Concerning Government job market statistics in relation to the potential placement of its graduates.

(20 U.S.C. 1094)

§ 668.66 Endorsements and testimonials.

The Secretary views as misrepresentation endorsements and testimonials that are not given voluntarily or do not describe current practices and conditions of an institution.

(20 U.S.C. 1094)

§ 668.67 Procedures.

(a) On receipt of a written allegation or complaint from a student, prospective student, the family of a student or prospective student, or a governmental official, the designated ED official, as defined in Subpart G, reviews the allegation or complaint to determine its factual base and seriousness.

(b) If the misrepresentation is minor and can be readily corrected, the designated ED official informs the institution and endeavors to obtain an informal, voluntary correction.

(c) If the designated ED official finds that the complaint or allegation is a substantial misrepresentation as to the nature of the educational programs, the financial charges of the institution, or the employability of its graduates, the official—

(1) Initiates action to fine or to limit, suspend, or terminate the institution's eligibility according to the procedure set forth in subpart G, or

(2) Takes other appropriate action.

(20 U.S.C. 1094)

(g) Subpart H is redesignated as Subpart G and is revised to read as follows:

Subpart G—Fine, Limitation, Suspension and Termination Proceedings

§ 668.71 Scope.

(a) This subpart establishes rules for the imposition of a fine upon, or for the suspension, limitation or termination of, an otherwise eligible institution's participation in any or all of the title IV student assistance programs.

(b) These rules apply to an institution which violates any title IV statutory provision, or any regulation, special arrangement, agreement or limitation prescribed under authority of title IV.

(c) This subpart does not apply to a determination that—

(1) An institution of higher education fails to meet the statutory definition set forth in sections 435, 481 or 1201 of the Higher Education Act;

(2) A vocational school fails to meet the statutory definition set forth in Section 435(c) of the Act; or

(3) An institution fails to qualify for certification to participate in the title IV student assistance programs because it does not meet the fiscal and administrative standards set forth in subpart B of this part.

(d) This subpart does not apply to administrative action by the Department of Education based on any alleged violation of—

(1) Title VI of the Civil Rights Act of 1964, which is governed by 34 CFR Part 100;

(2) Title IX of the Education Amendments of 1972, (relating to sex discrimination) which is governed by 34 CFR Part 106;

(3) The Family Educational Rights and Privacy Act of 1974 (Section 438 of the General Education Provisions Act, as amended) which is governed by 34 CFR Part 99;

(4) Section 504 of the Rehabilitation Act of 1973 (relating to discrimination on the basis of handicap) which is governed by 34 CFR Part 104; or

(5) The Age Discrimination Act of 1975 which is governed by 45 CFR Part 90.

(20 U.S.C. 1094)

§ 668.72 Definitions.

As used in this subpart:

"Designated ED official" means an official of the Education Department, to whom the Secretary has delegated responsibilities indicated in this subpart.

"Funds" means any money, commitments to provide money and commitments of insurance or reinsurance provided under any or all title IV student assistance programs covered under this subpart to an institution or to students enrolled and attending an institution.

"Institution" means (1) an institution of higher education as defined in Subpart A of this part, (2) a vocational school as defined in section 435(c) of the Higher Education Act (HEA), or (3) with respect to students who are nationals of the United States, an institution outside the United States which is comparable to an institution of higher education or to a vocational school and which has been approved by the Secretary for purposes of participation in title IV student assistance programs covered under this subpart.

(20 U.S.C. 1094)

§ 668.73 Informal compliance procedures.

(a) If the Secretary receives a complaint, or has other information which the Secretary believes to be reliable, indicating that an institution is, or may be, in violation of applicable laws, regulations, special arrangements, agreements, or limitations, the Secretary may call the matter to the attention of the institution and may give it a reasonable opportunity—

(1) To respond to the complaint or other information;

(2) To show that the matter has been corrected; or

(3) To submit an acceptable plan to correct the violation and prevent its recurrence.

(b) The procedures provided in this subpart for a fine or for a suspension, limitation, or termination need not be delayed during the informal compliance procedure if the Secretary believes—

(1) The delay would have an adverse effect on any or all title IV student assistance programs covered under this subpart, or

(2) The informal compliance procedure will not result in a correction of the alleged violation.

(20 U.S.C. 1094)

§ 668.74 Emergency action.

(a) The Secretary through a designated ED official, may take emergency action to withhold funds from an institution or its students and to withdraw the authority of an institution to obligate funds under the HEAL program or any or all title IV student assistance programs covered under this subpart if the designated ED official—

(1) Receives information which the official believes to be reliable that an institution is in violation of applicable laws, regulations, special arrangements, agreements, or limitations,

(2) Determines that such action is necessary to prevent the likelihood of substantial loss of funds to the Federal Government or to the students at the institution, and

(3) Determines that the likelihood of loss outweighs the importance of following the procedures set forth in this subpart for suspension, limitation, or termination.

(b) The designated ED official begins an emergency action by notifying the institution, by certified mail with return receipt requested, of the action and the basis on which it is taken. The effective date of the action is the date on which the notice is received by the institution.

(c) An emergency action shall not exceed 30 days unless a suspension, limitation, or termination proceeding is begun under this subpart before the expiration of that period. In such case, the period may be extended until the completion of that proceeding, including any appeal to the Secretary.

(d) If a suspension, limitation, or termination proceeding is begun, the Secretary will provide the institution, if it so requests an opportunity to show cause that the emergency action is unwarranted, pending the outcome of that proceeding.

(20 U.S.C. 1094)

§ 668.75 Fine proceedings.

(a) *Scope and consequences.* The Secretary may impose a fine of up to $25,000 on an institution that

(1) Violates any provision of title IV of the Higher Education Act or any regulation or agreement implementing that title; or

(2) Substantially misrepresents the nature of its educational program, its finance charges, and the employability of its graduates.

(b) *Procedures.* The designated ED official begins a fine proceeding, whether or not a suspension, limitation or termination proceeding has begun under § 668.76 or § 668.77 by sending the institution a notice, by certified mail with return receipt requested. This notice must—

(i) Inform the institution of the Secretary's intent to fine the institution and the amount of the fine, cite the consequences of that action, and identify the alleged violations which constitute the basis for the action;

(ii) Specify the proposed effective date of the fine, which shall be at least 20 days from mailing of the notice of intent;

(iii) Inform the institution that the fine will not be effective on the date specified in the notice if the designated ED official receives, at least five days before that date, a written request for a hearing or written material indicating why the fine should not be imposed.

(2) If the institution does not request a hearing but submits written material, the designated ED official, after considering that material, notifies the institution that—

(i) The fine will not be imposed; or

(ii) The fine is imposed as of a specified date, and in a specified amount.

(3) If the institution requests a hearing by the time specified in paragraph (b)(1)(iii) of this section, the designated ED official sets the date and the place. The date is at least 15 days after the designated ED official receives the request.

(4) A presiding officer conducts a hearing on the record.

(5) At the hearing the presiding officer shall consider any written material presented to him or her before the hearing, or any written material or other evidence presented during the course of the hearing.

(6) If the presiding officer concludes that the fine is warranted, he or she issues an initial decision confirming the imposition of a fine against the institution and the amount of the fine.

(c) *Expedited hearings.* With the approval of the presiding officer and the consent of the designated ED official and the institution, any time schedule specified in this section may be shortened.

(20 U.S.C. 1094)

§ 668.76 Suspension proceeding.

(a) *Scope and consequences.* From its effective date, a suspension removes an institution's eligibility for any or all of the title IV student assistance programs covered under this subpart for a period of time not exceeding 60 days unless—

(1) The institution and the designated ED official agree to an extension where the institution has not requested a hearing, or

(2) The designated ED official begins a limitation or termination proceeding under § 668.77.

(b) *Procedures.* (1) The designated ED official begins a suspension proceeding by sending a notice to an institution by certified mail with return receipt requested. The notice must—

(i) Inform the institution of the intent of the Secretary to suspend the institution's eligibility, cite the consequences of that action, and identify the alleged violations which constitute the basis for the action;

(ii) Specify the proposed effective date of the suspension, which shall be at least 20 days after the date of mailing of the notice of intent; and

(iii) Inform the institution that the suspension will not be effective on the date specified in the notice if the designated ED official receives, at least 5 days before that date, a request for a hearing or written material indicating why the suspension should not take place.

(2) If the institution does not request a hearing, but submits written material, the designated ED official, after considering that material, notifies the institution that—

(i) The proposed suspension is dismissed, or

(ii) The suspension is effective as of a specified date.

(3) If the institution on a timely basis requests a hearing, the designated ED official sets a date and place for it. The date will be at least 15 days after the designated ED official receives the request. No suspension takes place until a hearing is held.

(4) A presiding officer conducts a hearing on the record.

(5) At the hearing, the presiding officer shall consider any written material presented to him before the hearing or any material or other evidence presented to him during the course of the hearing.

(6) If, after considering the evidence, the presiding officer concludes that the suspension is warranted, the presiding officer will issue an initial decision that may suspend the eligibility of all or part of the institution.

(7) The Secretary will review the initial decision of the presiding officer and will issue a final decision adopting the initial decision, unless the initial decision is clearly unsupported by the evidence.

(c) Notice of the suspension will be promptly mailed to the institution. The suspension takes effect either upon the date on which the notice is received by the institution or the original proposed effective date stated in the notice of intent, whichever is later.

(d) A suspension shall not exceed 60 days unless a limitation or termination proceeding is begun under this subpart before the expiration of that period. In such case, the period may be extended until the completion of that proceeding, including any appeal to the Secretary.

(20 U.S.C. 1094)

§ 668.77 Limitation or termination proceedings.

(a) *Scope and consequences.* From its effective date, a limitation or termination shall either—

(1) Result in limitations on an institution's eligibility, or

(2) End the eligibility of an institution to participate in any or all title IV student assistance programs covered under this subpart.

(b) *Procedures.* The designated ED official begins a limitation or termination proceeding whether or not a fine or suspension proceeding has begun under § 668.75 or § 668.76, by sending an institution a notice, by certified mail with return receipt requested. This notice must—

(i) Inform the institution of the intent of the Secretary to limit or terminate the institution's eligibility, cite the consequences of that action, and identify the alleged violations which constitute the basis for the action, and in the case of a limitation proceeding, state the limits to be imposed;

(ii) Specify the proposed effective date of the limitation or termination, which shall be at least 20 days after the date of mailing of the notice of intent; and

(iii) Inform the institution that the limitation or termination will not be effective on the date specified in the notice if the designated ED official receives, at least 5 days before that date, a request for a hearing or written material indicating why the limitation or termination should not take place.

(2) If the institution does not request a hearing but submits written material, the designated ED official, after considering that material, notifies the institution that:

(i) The proposed action is dismissed,

(ii) Limitations are effective as of a specified date, or

(iii) The termination is effective as of a specified date.

(3) If the institution on a timely basis requests a hearing, the designated ED official sets a date and a place for it. The date will be at least 15 days after the designated ED official receives the request. No proposed limitation or termination takes place until after a hearing is held.

(4) A presiding officer conducts the hearing on the record.

(5) At the hearing the presiding officer shall consider any written material presented to him before the hearing, or any material or other evidence presented to him during the course of the hearing.

(6) If, after considering the evidence, the presiding officer concludes that limitation or termination is warranted, the presiding officer will issue an initial decision that may limit or terminate the institution's eligibility in whole or in part. If a termination action is brought against an institution, the presiding officer may issue a decision to impose one or more limitations on an institution rather than terminating its eligibility, if the presiding officer believes the limitation to be more appropriate.

(c) *Expedited hearing.* With the approval of the presiding officer and the mutual consent of the parties, any time schedule specified in this section may be shortened.

(20 U.S.C. 1094)

§ 668.78 Initial and final decisions—Appeals.

(a)(1) The presiding officer shall issue a written initial decision within 30 days after

(i) the last brief is filed, or

(ii) the last day of the hearing, if the presiding officer does not request the parties to submit briefs.

(2) The presiding officer shall promptly deliver his or her decision to the institution and the designated ED official.

(3) The presiding officer shall base findings of fact only on evidence considered at the hearing and on matters given official notice. If a hearing is conducted by written submissions, findings of fact shall be based on the facts stipulated by the parties.

(b) In a suspension proceeding, the Secretary reviews the presiding officer's initial decision and issues a final decision within 20 days after the initial decision. The Secretary adopts the initial decision unless it is clearly unsupported by the evidence presented at the hearing.

(c) In a fine, limitation or termination proceeding, the presiding officer's initial decision automatically becomes the Secretary's final decision 20 days after it is issued unless, within that 20 day period, the institution or the designated ED official appeals the decision to the Secretary.

(d)(1) Within a period specified by the Secretary, the party that appeals shall submit a brief or written materials to the Secretary explaining why the initial decision of the presiding officer should be overturned or modified.

(2) The appealing party may submit proposed findings of fact or conclusions of law. However, the proposed findings of fact must be supported by:

(i) The evidence introduced into the record at hearing,

(ii) Stipulations of the parties if the hearing consisted of written submissions, or

(iii) Matters that may be judicially noticed.

(3) The opposing party shall respond within the time period specified by the Secretary.

(4) Neither party may introduce new evidence on appeal.

(5) Each party shall provide a copy of its brief to the other party.

(e) The initial decision of the presiding officer imposing a fine or limiting or terminating the eligibility of the institution does not take effect pending the appeal unless the Secretary determines that a stay would provide a serious and adverse effect upon the programs involved.

(f)(1) The Secretary renders a final decision.

(2) In rendering that decision, the Secretary shall consider only evidence introduced into the record at the hearing, stipulations of facts if the hearing consisted of only written submissions, and matters that may be judicially noticed.

(3) The Secretary's decision may affirm, modify or reverse the presiding officer's initial decision, and shall include a statement of the reasons for the decision.

(20 U.S.C. 1094)

§ 668.79 Verification of mailing and receipt dates.

(a) Verification of the Department of Education's mailing dates and receipt dates referred to in this subpart is evidenced by the original receipt from the U.S. Postal Service.

(b) If an institution refuses to accept a notice mailed under this subpart, the Secretary considers the notice as being received on the date that the institution refuses to accept the notice.

(20 U.S.C. 1094)

§ 668.80 Fines.

(a) In determining the amount of a fine, the designated ED official, presiding officer and Secretary shall take into account—

(1)(i) The gravity of the institution's violation or failure to carry out the relevant statute, regulation or agreement, or

(ii) The gravity of its misrepresentations, and

(2) The size of the institution.

(b) Upon the request of the institution, the Secretary may compromise the fine.

(20 U.S.C. 1094)

§ 668.81 Limitation.

A limitation may include, as appropriate to the program in question—

(a) A limit on the number or percentage of students enrolled in an institution who may receive title IV student assistance funds covered under this subpart;

(b) A limit, for a stated period of time, on the percentage of an institution's total receipts from tuition and fees derived from title IV student assistance funds covered under this subpart;

(c) A requirement that an institution obtain a bond, in a specified amount, to assure its ability to meet its financial obligations to students who receive title IV student assistance funds covered under this subpart; or

(d) Such other conditions as may be determined to be reasonable and appropriate.

(20 U.S.C. 1094)

§ 668.82 Termination.

(a) *Effect.* Except as provided in paragraph (b) of this section, a termination—(1) Ends an institution's eligibility for any or all of the title IV student assistance programs;

(2) Prohibits an institution or the Secretary from making or increasing financial aid awards;

(3) Prohibits an institution from making any other new obligations against title IV student assistance funds covered under this subpart; and

(4) Prohibits further commitments of Federal insurance by the Secretary under the GSL or PLUS programs for loans to students to attend that institution, and prohibits further disbursements by an institution which is a lender under the GSL or PLUS programs (whether or not insurance commitments have been issued by the Secretary or a guarantee agency for such disbursements).

(b) *Payment period.* (1) If an institution is terminated during a payment period, any student at that school who has received an award or to whom a commitment has been made before the effective date of the termination may receive payment for that payment period.

(2) For the purposes of this section, the payment period is a semester, trimester, or quarter for institutions using these academic periods. For all other institutions, the payment period is the period from the beginning to the midpoint of the academic year, or from the midpoint to the end of the academic year.

(c) *Commitment.* For the purposes of this section (1) a commitment under the Pell Grant program occurs after a student is enrolled and attending the institution and has submitted a valid student eligibility report to the institution, or to the Secretary if the student is attending an institution which is under the alternate disbursement system, (2) a commitment under the Supplemental Grant, College Work-Study, or National Direct Student Loan Programs occurs when the student is enrolled and attending the institution and has received an award letter from the institution, and (3) a commitment under the GSL or PLUS Programs occurs when the Secretary or a guarantee agency advises the lender that the loan will be insured.

(20 U.S.C. 1094)

§ 668.83 Reimbursements, refunds, and offsets.

(a) The designated ED official, presiding officer, or Secretary may require an institution to take reasonable and appropriate corrective action to remedy a violation of applicable laws, regulations, special arrangements, agreements, or limitations.

(b) The corrective action may include payment of any funds, to the Commissioner or to designated recipients, which the institution improperly received, withheld, disbursed, or caused to be disbursed. Corrective action may, for example, relate to (1) with respect to the GSL or PLUS programs—(i) ineligible interest benefits, special allowances or other claims paid by the Secretary, and (ii) discounts, premiums, or excess interest paid in violation of part 682 or 683 of title 34 of the Code of Federal Regulations; and (2) with respect to all title IV student assistance programs covered under this subpart—(i) refunds due to students under the regulations, and (ii) any grants, work-study assistance, or loans made in violation of program regulations.

(c) If any final decision requires an institution to reimburse or make any other payment to the Secretary the Secretary may offset these claims against any benefits or claims due to the institution.

(20 U.S.C. 1094)

§ 668.84 Reinstatement after termination.

(a) An institution whose eligibility for any or all title IV student assistance programs covered under this subpart has been terminated may not file a request for reinstatement of its eligibility before the expiration of 18 months from the effective date of its termination.

(b) After the minimum termination period, the institution may request reinstatement of its eligibility. The

request must be in writing and must show that the institution has corrected the violations on which the termination was based and that it meets all qualifications for eligibility.

(c) Not later than 60 days after receipt of the request for reinstatement, the Secretary shall respond to the institution—

(i) Granting its request;

(ii) Denying its request; or

(iii) Granting the request subject to limitations.

(d)(1) If the Secretary denies the institution's request, or allows reinstatement subject to limitation(s), the institution, upon request, will be granted an opportunity to show cause why it should be fully reinstated.

(2) In the event the Secretary's response allows reinstatement subject to limitation, the institution, by requesting a show cause meeting, shall not be deemed to waive its rights to participate in the HEAL program or any or all title IV programs covered under this subpart if it complies with the reinstatement limitations pending the outcome of the meeting.

(20 U.S.C. 1094)

§ 668.85 Removal of limitation.

(a) An institution whose eligibility for any or all title IV student assistance programs covered under this subpart has been limited may not apply for removal of the limitation of its eligibility before the expiration of 12 months from the effective date of the limitation.

(b) After the minimum limitation period, the institution may request removal of the limitation. The request must be in writing and show that the institution has corrected the violations on which the limitation was based.

(c) No later than 60 days after the receipt of the request, the Secretary shall respond to the institution—

(i) Granting its request;

(ii) Denying its request; or

(iii) Granting the request subject to other limitations.

(d) If the Secretary denies the request, or establishes other limitations, the institution upon request will be granted an opportunity to show cause why its eligibility should be fully reinstated.

(e) The institution's request for a show cause meeting shall not be deemed to waive its right to participate in any or all title IV student assistance programs covered under this subpart if it complies with such continuing limitations pending the outcome of the meeting.

(20 U.S.C. 1094)

Appendix A—[Reserved]

Appendix B—Standards for Audit of Governmental Organizations, Programs, Activities, and Functions (GAO)

Part III Chapter 3—Independence

(a) The Third general standard for governmental auditing is: In matters relating to the audit work, the audit organization and the individual auditors shall maintain an independent attitude.

(b) This standard places upon the auditor and the audit organization the responsibility for maintaining sufficient independence so that their opinions, conclusions, judgments, and recommendations will be impartial. If the auditor is not sufficiently independent to produce unbiased opinions, conclusions, and judgments, he should state in a prominent place in the audit report his relationship with the organization or officials being audited.[1]

(c) The auditor should consider not only whether his or her own attitude and beliefs permit him or her to be independent but also whether there is anything about his or her situation which would lead others to question his or her independence. Both situations deserve consideration since it is important not only that the auditor be, in fact, independent and impartial but also that other persons will consider him or her so.

(d) There are three general classes of impairments that the auditor needs to consider; these are personal, external, and organizational impairments. If one or more of these are of such significance as to affect the auditor's ability to perform his or her work and report its results impartially, he or she should decline to perform the audit or indicate in the report that he or she was not fully independent.

Personal Impairments

There are some circumstances in which an auditor cannot be impartial because of his or her views or his or her personal situation. These circumstances might include:

1. Relationships of an official, professional, and/or personal nature that might cause the auditor to limit the extent or character of the inquiry, to limit disclosure, or to weaken his or her findings in any way.

2. Preconceived ideas about the objectives or quality of a particular operation or personal likes or dislikes of individuals, groups, or objectives of a particular program.

3. Previous involvement in a decisionmaking or management capacity in the operations of the governmental entity or program being audited.

4. Biases and prejudices, including those induced by political or social convictions, which result from employment in or loyalty to a particular group, entity, or level of government.

5. Actual or potential restrictive influence when the auditor performs preaudit work and subsequently performs a post audit.

6. Financial interest, direct or indirect, in an organization or facility which is benefiting from the audited programs.

External Impairments

External factors can restrict the audit or impinge on the auditor's ability to form independent and objective opinions and conclusions. For example, under the following conditions either the audit itself could be adversely affected or the auditor would not have complete freedom to make an independent judgment.[2]

1. Interference or other influence that improperly or imprudently eliminates, restricts, or modifies the scope or character of the audit.

2. Interference with the selection or application of audit procedures of the selection of activities to be examined.

3. Denial of access to such sources of information as books, records, and supporting documents or denial or opportunity to obtain explanations by officials and employees of the governmental organization, program, or activity under audit.

4. Interference in the assignment of personnel to the audit task.

5. Retaliatory restrictions placed on funds or other resources dedicated to the audit operation.

6. Activity to overrule or significantly influence the auditors judgment as to the appropriate content of the audit report.

7. Influences that place the auditor's continued employment in jeopardy for reasons other than competency or the need for audit services.

8. Unreasonable restriction on the time allowed to competently complete an audit assignment.

Organizational Impairments

(a) The auditor's independence can be affected by his or her place within the organizational structure of governments. Auditors employed by Federal, State, or local government units may be subject

[1] If the auditor is not fully indpendent because he or she is an employee of the audited entity, it will be adequate disclosure to so indicate. If the auditor is a practicing certified public accountant, his or her conduct should be governed by the AICPA "Statements on Auditing Procedure."

[2] Some of these situations may constitute justifiable limitations on the scope of the work. In such cases the limitation should be identified in the auditor's report.

to policy direction from superiors who are involved either directly or indirectly in the government management process. To achieve maximum independence such auditors and the audit organization itself not only should report to the highest practicable echelon within their government but should be organizationally located outside the line-management function of the entity under audit.

(b) These auditors should also be sufficiently removed from political pressures to ensure that they can conduct their auditing objectively and can report their conclusions completely without fear of censure. Whenever feasible they should be under a system which will place decisions on compensation, training, job tenure, and advancement on a merit basis.

(c) When independent public accountants or other independent professionals are engaged to perform work that includes inquiries into compliance with applicable laws and regulations, efficiency and economy of operations, or achievement of program results, they should be engaged by someone other than the officials responsible for the direction of the effort being audited. This practice removes the pressure that may result if the auditor must criticize the performance of those by whom he or she was engaged. To remove this obstacle to independence, governments should arrange to have auditors engaged by officials not directly involved in operations to be audited.

Appendix C—Appendix I. Standards for Audit of Governmental Organizations, Programs, Activities, and Functions (GAO)

Qualifications of Independent Auditors Engaged by Governmental Organizations

(a) When outside auditors are engaged for assignments requiring the expression of an opinion on financial reports of governmental organizations, only fully qualified public accountants should be employed. The type of qualifications, as stated by the Comptroller General, deemed necessary for financial audits of governmental organizations and programs is quoted below:

"Such audits shall be conducted * * * by independent certified public accountants or by independent licensed public accountants, licensed on or before December 31, 1970, who are certified or licensed by a regulatory authority of a State or other political subdivision of the United States: Except that independent public accountants licensed to practice by such regulatory authority after December 31, 1970, and persons who althrough not so certified or licensed, meet, in the opinion of the Secretary, standards of education and experience representative of the highest prescribed by the licensing authorities of the several States which provide for the continuing licensing of public accountants and which are prescribed by the Secretary in appropriate regulations may perform such audits until December 31, 1975; Provided, That if the Secretary deems it necessary in the public interest, he may prescribe by regulations higher standard than those required for the practice of public accountancy by the regulatory authorities of the States."[1]

(b) The standards for examination and evaluation require consideration of applicable laws and regulations in the auditor's examination. The standards for reporting require a statement in the auditor's report regarding any significant instances of noncompliance disclosed by his or her examination and evaluation work. What is to be included in this statement requires judgment. Significant instances of noncompliance, even those not resulting in legal liability to the audited entity, should be included. Minor procedural noncompliance need not be disclosed.

(c) Although the reporting standard is generally on an exception basis—that only noncompliance need be reported—it should be recognized that governmental entities often want positive statements regarding whether or not the auditor's tests disclosed instances of noncompliance. This is particularly true in grant programs where authorizing agencies frequently want assurance in the auditor's report that this matter has been considered. For such audits, auditors should obtain an understanding with the authorizing agency as to the extent to which such positive comments on compliance are desired. When coordinated audits are involved, the audit program should specify the extent of comments that the auditor is to make regarding compliance.

(d) When noncompliance is reported, the auditor should place the findings in proper perspective. The extent of instances of noncompliance should be related to the number of cases examined to provide the reader with a basis for judging the prevalence of noncompliance.

[1] Letter (B-148144, September 15, 1970) from the Comptroller General to the heads of Federal departments and agencies. The reference to "Secretary" means the head of the department or agency.

(The pamphlet "Standards for Audit of Governmental Organizations, Programs, Activities, and Functions" is for sale by the Superintendent of Document, U.S. Government Printing Office, Washington, D.C. 20402. Stock number 2000-01000. Price: 85 cents.)

PART 686 [Removed]

2. Part 686 of Title 34 of the Code of Federal Regulations is removed.

[FR Doc. 80-41322 Filed 12-30-80; 8:45 am]
BILLING CODE 4000-01-M

Federal Register

Wednesday
December 31, 1980

Part VIII

Department of Education

International Education Programs; Final Regulations and Request for Comments

DEPARTMENT OF EDUCATION

34 CFR Parts 655,656,658, 660 and 667

International Education Programs

AGENCY: Department of Education.

ACTION: Final regulations with comments invited.

SUMMARY: The Secretary of Education issues regulations for the International Education Programs. These regulations have been amended to reflect statutory changes resulting from the Education Amendments of 1980 and to reflect changes required by the Education Division General Administrative Regulations (EDGAR). These regulations will assist potential applicants by specifying the selection criteria that the Secretary uses in evaluating applications for assistance under these programs.

DATES: Comments must be received on or before March 2, 1981. These regulations are expected to take effect 45 days after they are transmitted to the Congress. Regulations are usually transmitted to the Congress several days before they are published in the Federal Register. The effective date is changed if the Congress takes certain adjournments. If you want to know the effective date of these regulations, call or write the Department of Education contract person.

ADDRESS: Comments should be addressed to: Dr. Richard Krasno, Deputy Assistant Secretary for International Education, U.S. Department of Education, 400 Maryland Avenue, SW (Room 3918, ROB-3), Washington, D.C. 20202.

FOR FURTHER INFORMATION CONTACT: Dr. Richard Krasno. Telephone: (202) 245-9758.

SUPPLEMENTARY INFORMATION:

Waiver of Proposed Rulemaking Procedures

In accordance with Section 431(b)(2)(a) of the General Education Provisions Act (20 U.S.C. 12232(b)(2)(A)), it has been the practice of the Secretary to offer interested parties the opportunity to comment on proposed regulations. The Secretary then reviews these comments and makes appropriate changes before republishing the regulations in final form.

For the reasons described in the following paragraphs, the use of that practice in connection with the provisions of these regulations is impracticable and contrary to the public interest under 5 U.S.C. 553(b). However, the Secretary invites the public to comment on these regulations and will consider appropriate comments before publishing the regulations again.

The Secretary has waived proposed rulemaking procedures for the following reasons:

The programs for which regulations are published (34 CFR Parts 655, 656, 658, 660, and 667) were formerly authorized under Title VI of the National Defense Education Act (NDEA) of 1958, as amended. Final regulations for the programs authorized under Sections 601 and 602 of the NDEA were published in May 1977. For the program authorized under Section 603 of the NDEA, final regulations were published in May 1978, and amended in May 1979. Public comment was provided for prior to the issuing of final regulations for these programs.

Amendments to the current regulations for these programs were made to comply with EDGAR and were published as proposed regulations for public comment in the Federal Register of April 3, 1980. No comments were received.

On November 14, 1980, the Secretary published a notice in the Federal Register of the Department's intent to publish regulations necessary to implement the Education Amendments of 1980. In that notice, the Department listed the existing regulations affected by the new law and requested comments whether those regulations required information that is already being gathered by or is available from any other agency or authority of the United States.

The regulations in this document are based on regulations listed in the November 14, 1980 notice. Based on any comments received and the Department's own review, it has been determined that the regulations in this document do not require information that is already being gathered by or is available from any other agency or authority of the United States.

The changes in the legislation governing these programs for which the Secretary is publishing regulations are not considerd to be major. These regulations represent a shortened and simplified version of the former ones, consonant with the terms of the new legislation. No major departure in the administration of these programs is proposed. For these reasons, and in order to permit the Secretary to make awards in fiscal year 1981 in a timely manner, the regulations are published in final form.

Prior to taking any action with respect to the award of new grants for fiscal year 1982 and subsequent fiscal years, the Secretary intends to issue new regulations taking into account public comment received on this document. This will permit interested parties to study the regulations governing the programs and to make comments and suggestions to the Secretary without undue delay to the 1981 grant cycle.

Effect of Education Amendments of 1980

The International Education Programs constitute a group of Federal programs of assistance to institutions of higher education and other agencies and organizations. The programs are designed to aid in the development of resources and trained personnel for international study, international research, and foreign language study (20 U.S.C. 1121).

Section 601(a) of the Higher Education Act of 1965, as amended by the Education Amendments of 1980 (Pub. L. 96-374), contains the congressional findings underlying the programs:

> Sec. 601. (a) The Congress finds that—
> (1) knowledge of other countries is important to promote mutual understanding and cooperation between nations;
> (2) strong American educational resources are a necessary base for strenghthening our relations with other countries;
> (3) present and future generations of Americans should be given the opportunity to develop to the fullest extent possible their intellectual capacities in all areas of knowledge pertaining to other countries, peoples, and cultures; and
> (4) the economy of the United States and the long range security of the Nation are dependent upon acquiring such knowledge.

Prior to the enactment of the Education Amendments of 1980, these programs were authorized by Title VI of the National Defense Education Act of 1958, 20 U.S.C. 511-513. Certain of these programs were also authorized by Title I of the International Education Act of 1966, 20 U.S.C. 1172-1177.

Section 395(c) (1) and (2) of the Education Amendments of 1980 repealed Title VI of the National Defense Education Act and Title I of the International Education Act. Section 601 transferred certain of the programs previously authorized by the repealed acts to a new Title VI of the Higher Education Act, to be codified at 20 U.S.C. 1121-1132.

The new Title VI provides authority for programs to assist: Graduate and Undergraduate Language and Area Centers (section 602), referred to in these regulations as National Resource Centers; International Studies Centers (section 603), referred to in these regulations as Regional Resource Centers; Undergraduate International Studies and Foreign Language Programs (section 604); Research and Studies (section 605); and Business and

International Education Programs (sections 611–613).

In addition, the Education Amendments of 1980 provided for a program of assistance for International Understanding as Part N of the elementary and Secondary Education Act of 1965 (sections 393–395), as amended.

Several of these programs correspond to international education programs previously conducted under the National Defense Education Act, Title VI. For example, the language and area centers and fellowships program previously conducted under Section 601 of the National Defense Education Act is now, with some revisions, authorized by Section 602 of the Higher Education Act, 20 U.S.C 1122.

Programs for Which No Regulations Are Issued

In the case of some of the programs authorized by the new Title VI of the Higher Education Act, funds have not been provided for fiscal year 1981. These programs include the International Studies Centers, also referred to as Regional Resource Centers (section 603), and the Business and International Education Programs (sections 611–613). In addition, funds are not available for aiding graduate programs (as distinguished from centers), as authorized by section 602.

Regulations are not issued or proposed for programs or program components for which funds are not available during the current fiscal year. Any obligation of the Secretary to develop and publish regulations for these programs is considered to have been satisfied by the publication of the general regulations governing newly funded programs, 34 CFR Parts 75 and 76, 45 FR 84058, December 22, 1980.

Programs for Which Regulations Are Issued

Regulations are included in this document for the programs under the following statutory authorities:

—Section 602 of the Act (National Resource Centers and Fellowships) (34 CFR Part 656);

—Section 604 of the Act (Undergraduate International Studies and Foreign Language Program) (34 CFR Part 658);

—Section 605 of the Act (International Research and Studies) (34 CFR Part 660); and

—Section 393 of the Elementary and Secondary Education Act of 1965, as amended (International Understanding) (34 CFR Part 667).

Part 655 contains definitions and certain provisions—including some selection criteria common to all four programs and applies to all of the programs. It is designed to shorten and simplify the regulations for the programs by avoiding needless repetition of common provisions.

The following paragraphs describe each of the programs for which regulations are provided in this document and the major regulatory provisions and issues:

1. National Resource Centers and Fellowships Program (34 CFR Part 656)

Section 602 of the Higher Education Act (20 U.S.C. 1122) authorizes the Secretary of Education to assist institutions of higher education, or combinations of institutions of higher education, to establish, strengthen, and operate graduate and undergraduate centers that will be national resources for—

(a) The teaching of any modern foreign language;

(b) Instruction in fields needed to provide a full understanding of the areas, regions, or countries in which that language is commonly used; or

(c) Research and training in international studies and the international aspects of professional and other fields of study.

The Secretary is also authorized to pay stipends to persons undergoing training.

The National Resource Centers and Fellowships Program carried out under section 602 of the Act corresponds in large part to the language and area centers and fellowships previously administered under Section 601 of the National Defense Education Act. Emphasis is placed on assistance to centers that provide advanced training in modern foreign languages, coupled with area or international studies, as a means of meeting the needs for trained specialists.

A center will be evaluated on the extent to which its resources—including faculty, teaching program, and library collections—are sufficiently strong to carry out the purposes of the Act.

The regulations in 34 CFR Parts 655 and 656 apply to this program. They provide that the Secretary considers granting assistance to centers that focus on a single country or one or more world areas or a center that focuses on international studies or the international aspects of contemporary issues or topics. In each case, language instruction must be made available (§ 656.11). Training may be provided at the graduate and undergraduate levels, or at the undergraduate level only (§ 656.12).

An applicant for a center must show that it provides appropriate advanced training and research opportunities as required by the Act; maintains specialized library collections and employs scholars engaged in appropriate research; and provides outreach and consultative services (§ 656.10).

To receive a fellowship, an individual must be engaged in advanced training in a foreign language and in area or international studies at an institution of higher education approved by the Secretary. The Secretary makes allocations of fellowships to institutions of higher education. Individual applicants for fellowships apply to the institutions (§ 656.3). The selection criteria that the Secretary uses in evaluating applications are contained in §§§ 656.31, 656.32, and 656.33.

The Secretary is authorized to set annual priorities for both centers and fellowships.

The regulations also contain provisions governing allowable costs and the duration of grants and fellowships (§§ 656.36 and 656.37), and the amount and payment methods for fellowships (§§ 656.41–656.44).

2. The Undergraduate International Studies and Foreign Language Program (34 CFR Part 658)

Section 604 of the Higher Education Act (20 U.S.C. 1124) authorizes the Secretary to make grants to assist institutions of higher education, or combinations of institutions, in planning, developing, and carrying out comprehensive programs to strengthen and improve undergraduate instruction in international studies and foreign languages.

The Secretary may also make grants to public and nonprofit private agencies and organizations, including professional and scholarly associations, if the Secretary determines that grants to those parties will make an especially significant contribution to attaining the objectives of the section.

The Undergraduate International Studies and Foreign Language Program carried out under section 604 of the Act corresponds in large part to the Undergraduate International Studies Program previously carried out under the authority of the National Defense Education Act. The latter called for the establishment of both graduate and undergraduate language and area centers and programs.

The regulations in 34 CFR Parts 655 and 658 apply to this program. The Secretary awards grants under Part 658 to assist projects and activities that are an integral part of a comprehensive

program (§ 658.11). In addition to evaluating applications on the basis of the funding criteria in, as appropriate, 34 CFR 658.31, 658.32, and 658.33, the Secretary seeks to achieve an equitable distribution of awards throughout the United States and encourages diversity by ensuring that a variety of types of institutions receive funding (§ 658.34).

3. The International Research and Studies Program (34 CFR Part 660)

Section 605 of the Higher Education Act (20 U.S.C. 1125) authorizes the Secretary to provide assistance—for the conduct of research, studies, and surveys and the development of specialized instructional materials that furthers the purposes of Part A of Title VI of the Higher Education Act and Part N of Title III of the Elementary and Secondary Education Act of 1965.

The Research and Studies Program can serve as an instrument for coordination across educational levels. These activities are intended to serve as an effective tool for follow-up to the President's Commission on Foreign Language and International Studies in determining present and future needs in foreign languages and other fields.

The projects conducted under section 605 of the Act correspond in large part to the foreign language and area studies research activities previously administered under Section 602 of the National Defense Education Act. They include activities designed to strengthen the aims of the International Understanding Program, also covered by these regulations.

Under the Research and Studies Program the Secretary awards grants and contracts for—

(a) Studies and surveys to determine the need for increased or improved instruction in modern foreign languages and in other fields needed to provide a full understanding of the areas and countries in which those languages are commonly used;

(b) Research on more effective methods of teaching and evaluating competency in foreign languages and related fields;

(c) The development of materials for use in the expansion or improvement of instruction in foreign languages and foreign area studies; and

(d) Research, studies, and the development of materials that contribute to Americans' understanding of the cultures, actions, policies, and interrelationships of nations.

4. The International Understanding Program (34 CFR Part 667)

Part N of the Elementary and Secondary Education Act of 1965 (Section 394) (20 U.S.C. 3064) (formerly Section 603 of NDEA) authorizes the Secretary to stimulate, on all levels of education, programs that increase the understanding of students and the public about the cultures, actions, and interconnections of nations and peoples.

The purpose is to enable the public to make more informed judgments with regard to the international policies and actions of the United States.

Under this program, the Secretary may award grants to any public or private agency or organization. These may include, but are not limited to, institutions of higher education, State and local educational agencies, professional associations, education consortia, and organizations of teachers.

References to EDGAR

Readers will note that references to the Education Division General Administrative Regulations (EDGAR) cite Title 34 of the Code of Federal Regulations. EDGAR was transferred to Title 34, through final regulations published in the Federal Register on November 21, 1980 (45 FR 77368).

However, EDGAR was initially published in the Federal Register on April 3, 1980 (45 FR 22494) under Title 45 of the Code of Federal Regulations (CFR). For readers wishing to refer to that EDGAR document, the following cross-references will be helpful:

45 CFR Part 74 is now 34 CFR Part 74
45 CFR Part 100a is now 34 CFR Part 75
45 CFR Part 100b is now 34 CFR Part 76
45 CFR Part 100c is now 34 CFR Part 77

Invitation to Comment

Interested persons are invited to submit comments and recommendations regarding these regulations. Written comments and recommendations may be sent to the address given at the beginning of this preamble. All comments submitted on or before March 2, 1981, will be considered before the Secretary issues new regulations.

All comments submitted in response to these proposed regulations will be available for public inspection, during and after the comment period, in Room 3918, ROB-3, 7th and D Streets SW., Washington, D.C., between the hours of 8:30 a.m. and 4:00 p.m., Monday through Friday of each week except Federal holidays.

Citation of Legal Authority

A citation of statutory or other legal authority is placed in parentheses on the line following each substantive provision of these regulations.

Dated: December 23, 1980.

Shirley M. Hufstedler,

Secretary of Education.

(Catalog of Federal Domestic Assistance Numbers 84.015, International Studies Centers and Foreign Language and Area Studies Fellowships; 84.016, International Studies Programs; 84.017, Foreign Language and Area Studies Research; and 84.095, Citizen Education and Cultural Understanding Program)

The Secretary revises Part 655 of Title 34 of the Code of Federal Regulations to read as follows:

PART 655—INTERNATIONAL EDUCATION PROGRAMS—GENERAL

Subpart A—General

Sec.
655.1 Which programs do these regulations govern?
655.3 What regulations apply to the International Education Programs?
655.4 What definitions apply to the International Education Programs?

Subpart B—What Kinds of Projects Does the Secretary Assist? [Reserved]

Subpart C—How Does One Apply for a Grant?

655.20 How does one apply for funds?

Subpart D—How Does the Secretary Make a Grant?

655.30 How does the Secretary evaluate an application?
655.31 What general selection criteria does the Secretary use?

Authority: Higher Education Act of 1965, Pub. L. No. 89-329, as amended, 20 U.S.C. 1121-1127; Elementary and Secondary Education Act of 1965, Pub. L. 89-10, 20 U.S.C. 3063-3065.

Subpart A—General

§ 655.1 Which programs do these regulations govern?

The regulations in this part govern the administration of the following programs in international education:

(a) The National Resource Centers and Fellowships Program (Section 602 of the Higher Education Act of 1965);

(b) The Undergraduate International Studies and Foreign Language Program (Section 604);

(c) The International Research and Studies Program (Section 605); and

(d) The International Understanding Program (Sections 393-95 of the Elementary and Secondary Education Act of 1965).

(20 U.S.C. 1121-1132, 3063-3065)

§ 655.3 What regulations apply to the International Education Programs?

The following regulations apply to the International Education Programs:

(a) The Education Division General Administrative Regulations (EDGAR) in

34 CFR Part 75 (Direct Grant Programs) and 34 CFR Part 77 (General).

(b) The regulations in this Part 655; and

(c) As appropriate, the regulations in—

(1) 34 CFR Part 656 (National Resource Centers and Fellowships Program);

(2) 34 CFR Part 658 (Undergraduate International Studies and Foreign Language Program);

(3) 34 CFR Part 660 (International Research and Studies Program); and

(4) 34 CFR Part 667 (International Understanding Program).

(20 U.S.C. 1121–1127, 3063–3065)

§ 655.4 What definitions apply to the International Education Programs?

(a) *Definitions in EDGAR.* The following terms used in this part and 34 CFR Parts 656–667 are defined in 34 CFR Part 77:

Acquisition
Applicant
Application
Award
Budget
Contract
Equipment
Facilities
Fiscal year
Grant
Grantee
Grant period
Local educational agency
Nonprofit
Project
Project period
Private
Public
Secretary
State educational agency
Supplies

(20 U.S.C. 1121–1127, 3063–3065)

(b) *Definitions that apply to these programs.* The following definition applies to these programs:

"Institution of higher education," which is defined in Section 1201 of the Higher Education Act of 1965, means—

An educational institution in any State that

(1) Admits as regular students only persons having a certificate of graduation from a school providing secondary education, or the recognized equivalent of that type of certificate;

(2) Is legally authorized within that State to provide a program of education beyond secondary education;

(3) Provides an educational program for which it awards a bachelor's degree or provides not less than a two-year program that is acceptable for full credit toward a bachelor's degree;

(4) Is a public or other nonprofit institution; and

(5) Is accredited by a nationally recognized accrediting agency or association or, if not so accredited—

(i) Is an institution with respect to which the Secretary has determined that there is satisfactory assurance—considering the resources available to the institution, the period of time, if any, during which it has operated, the effort it is making to meet accreditation standards, and the purpose for which this determination is being made—that the institution will meet the accreditation standards of such an agency or association within a reasonable time; or

(ii) Is an institution whose credits are accepted, on transfer, by not fewer than three institutions that are so accredited, for credit on the same basis as if transferred from an institution so accredited. The term also includes any school that provides not less than a one-year program of training to prepare students for gainful employment in a recognized occupation and that meets the provision of paragraphs (1), (2), (4), and (5) of this definition.

(20 U.S.C. 1141)

Subpart B—What Kinds of Projects Does the Secretary Assist? [Reserved]

Note.—Subpart B of 34 CFR Parts 656, 658, 660, and 667 describes the kinds of projects that the Secretary assists under this Act.

Subpart C—How Does One Apply for a Grant?

§ 655.20 How does one apply for funds?

(a) The introduction at the beginning of EDGAR includes general information about how to apply for a grant under a Department of Education program.

(20 U.S.C. 1121–1127, 3063–3065)

(b) An applicant must demonstrate, on the application form furnished by the Secretary, that the proposed project meets the requirements of the Act and the applicable regulations.

(20 U.S.C. 1121–1127, 3063–3065)

Subpart D—How Does the Secretary Make a Grant?

§ 655.30 How does the Secretary evaluate an application?

The Secretary evaluates all applications for International Education Programs on the basis of—

(a) The general criteria in § 655.31; and

(b) The specific criteria in, as applicable, 34 CFR Parts 656, 658, 660, and 667.

(20 U.S.C. 1121–1127, 3063–3065)

§ 655.31 What general selection criteria does the Secretary use?

(a) *Plan of operation.* (1) The Secretary reviews each application for information that shows the quality of the plan of operation for the project.

(2) The Secretary looks for information that shows—

(i) High quality in the design of the project;

(ii) An effective plan of management that ensures proper and efficient administration of the project;

(iii) A clear description of how the objectives of the project relate to the purpose of the program;

(iv) The way the applicant plans to use its resources and personnel to achieve each objective; and

(v) A clear description of how the applicant will provide equal access and treatment for eligible project participants who are members of groups that have been traditionally underrepresented, such as—

(A) Members of racial or ethnic minority groups;

(B) Women;

(C) Handicapped persons; and

(D) The elderly.

(b) *Quality of key personnel.* (1) The Secretary reviews each application for information that shows the quality of the key personnel the applicant plans to use on the project.

(2) The Secretary looks for information that shows—

(i) The qualifications of the project director (if one is to be used);

(ii) The qualifications of each of the other key personnel to be used in the project;

(iii) The time that each person referred to in paragraphs (b)(2) (i) and (ii) of this section plans to commit to the project; and

(iv) The extent to which the applicant, as part of its nondiscriminatory employment practices, encourages applications for employment from persons who are members of groups that have been traditionally underrepresented, such as members of racial or ethnic minority groups, women, handicapped persons, and the elderly.

(3) To determine the qualifications of a person, the Secretary considers evidence of past experience and training, in fields related to the objectives of the project, as well as other information that the applicant provides.

(c) *Budget and cost effectiveness.* (1) The Secretary reviews each application for information that shows that the project has an adequate budget and is cost effective.

(2) The Secretary looks for information that shows—

(i) The budget for the project is adequate to support the project activities; and

(ii) Costs are reasonable in relation to the objectives of the project.

(d) *Evaluation plan.* (1) The Secretary reviews each application for information that shows the quality of the evaluation plan for the project.

(2) The Secretary looks for information that shows methods of evaluation that are appropriate for the project and, to the extent possible, are objective and produce data that are quantifiable.

(e) *Adequacy of resources.* (1) The Secretary reviews each application for information that shows that the applicant plans to devote adequate resources to the project.

(2) The Secretary looks for information that shows—

(i) The facilities that the applicant plans to use are adequate; and

(ii) The equipment and supplies that the applicant plans to use are adequate.

(20 U.S.C. 1121–1127, 3063–3065)

The Secretary amends Title 34 of the Code of Federal Regulations by adding a new Part 656 to read as follows:

PART 656—NATIONAL RESOURCE CENTERS AND FELLOWSHIPS PROGRAM FOR LANGUAGE AND AREA OR LANGUAGE AND INTERNATIONAL STUDIES

Subpart A—General

Sec.
656.1 What is the National Resource Centers and Fellowships Program?
656.2 Eligible parties: National Resource Centers.
656.3 Eligible parties: National Resource Fellowships
656.4 What are the eligibility requirements an individual must meet to qualify for a fellowship?
656.5 What regulations apply to the National Resource Centers and Fellowship Program?
656.6 What definitions apply to the National Resource Centers and Fellowship Program?

Subpart B—What Kinds of Projects Does the Secretary Assist under This Program?

656.10 What activities must a National Resource Center conduct?
656.11 What types of centers receive assistance?
656.12 What levels of instruction may a National Resource Center provide?

Subpart C—How Does One Apply for a Grant or Fellowship?

656.20 How does an institution submit an application?
656.21 How does an individual apply for a fellowship?

Subpart D—How does the Secretary Make a Grant?

656.30 How does the Secretary evaluate an application under the National Resource Centers and Fellowships Program?
656.31 What selection criteria does the Secretary use?
656.32 What additional criterion does the Secretary use for National Resource Centers?
656.33 What additional criteria does the Secretary use for National Resource Fellowships?
656.34 What priorities may the Secretary established for National Resource Centers?
656.35 What priorities may the Secretary establish for National Resource Fellowships?
656.36 What is the duration of a project for a National Resource Center?
656.37 What is the duration of a National Resource Fellowship?

Subpart E—What Conditions Must Be Met by a Grantee?

656.40 National Resource Centers: Which costs are allowable, and which costs are unallowable?
656.41 What is the amount of a fellowship?
656.42 What is the payment method for fellowships?
656.43 What are the limitations on use of funds for undergraduate travel?
656.44 Under what circumstances must an institution teminate a fellowship?

Subpart F—What Are the Administrative Responsibilities of a Fellow?

656.50 What are the reporting requirements for a fellow?

Authority: Sec. 602 of Pub. L. 96–374, Title VI.

Subpart A—General.

§ 656.1 What is the National Resource Centers and Fellowships Program?

(a) The National Resource Centers and Fellowships Program for Language and Area or Language and International Studies—

(1) Assists institutions of higher education to establish, strengthen, and operate centers that will be national resources—

(i) For the teaching of any modern foreign language;

(ii) For instruction in fields needed to provide a full understanding of the areas, regions, or countries in which the modern language is commonly used; or

(iii) For research and training in international studies and the international aspects of professional and other fields of study; and

(2) Assists students undergoing advanced training—in fields related to this part—by providing fellowships, awarded through an institution of higher education approved by the Secretary under section 602(b) of the Act.

(b) Fellowships awarded under this part are designed to enable students specializing in various disciplines or professional fields of study simultaneously to acquire—

(1) A high level of competence in one or more languages critical to national needs of the United States; and

(2) A fuller understanding of the areas, regions, or countries in which that language is commonly used.

(20 U.S.C. 1122(a) and (b))

§ 656.2 Eligible parties: National Resource Centers.

(a) An institution of higher education is eligible to apply for assistance under this part to establish and operate a National Resource Center.

(b) As used in this part, the term "institution of higher education" includes a combination of institutions of higher education.

(20 U.S.C. 1122(a)(1))

§ 656.3 Eligible parties: National Resource Fellowships.

(a)(1) Under section 602(b) of the Act, the Secretary allocates fellowships to an institution of higher education that offers advanced training in a foreign language and in area or international studies.

(2) However, an institution need not receive—or apply for—assistance to establish and operate a center under section 602(a) of the Act in order to receive an allocation of fellowships.

(b) An individual is eligible for a National Resource Fellowship if he or she—

(1) Is engaged in advanced training in a foreign language and in area or international studies at an institution approved by the Secretary under section 602(b) of the Act to receive fellowships; and

(2) Meets the requirements of § 656.4 of these regulations.

(c) An individual applies for an award to an institution of higher education with an allocation of fellowships.

(20 U.S.C. 1122(b))

§ 656.4 What are the eligibility requirements an individual must meet to qualify for a fellowship?

(a) An institution may award a fellowship to an individual who—

(1) Is a citizen or permanent resident of the United States;

(2) Is accepted for advanced training at an institution with an allocation of fellowships in language and area or language and international studies;

(3) Shows potential for high academic achievement, based on such indices as grade point average, class ranking, or

similar measures that the institution may determine; and

(4) Is undergoing training in subject areas that are consonant with the institution's major fields of expertise and concentration in language and relevant area, international, or professional studies, as described in the institutional application.

(b) An institution may award a fellowship to an individual for use overseas if the individual—

(1) Meets the requirements under paragraph (a) of this section; and

(2) Is enrolled in an advanced language program overseas established by a United States institution; or

(3)(i) Is doing dissertation research that cannot be done in the United States; and

(ii) Is affiliated with an overseas institution of higher education or an appropriate organization.

(c) To award a fellowship for use overseas, an institution must obtain the advance approval of the Secretary.

(20 U.S.C. 1122(b); Sen. Rept. No. 96-733, 96th Cong. 2nd Sess. pages 60-61)

§ 656.5 What regulations apply to the National Resource Centers and Fellowship Program?

The following regulations apply to this program:

(a) The regulations referred to in 34 CFR 655.3(a) and (b).

(b) The regulations in this Part 656.

(20 U.S.C. 1121-1127)

§ 656.6 What definitions apply to the National Resource Centers and Fellowship Program?

The following definitions apply to this program:

(a) The definitions in 34 CFR 655.4.

(b) "Fellow" means a person who receives a stipend under Title VI of the Act.

(20 U.S.C. 1121-1127)

Subpart B—What Kinds of Projects Does the Secretary Assist under This Program?

§ 656.10 What activities must a National Resource Center conduct?

A National Resource Center receiving Federal assistance under this part must conduct the following activities:

(a) Provide advanced training and research opportunities for students and faculty in any modern foreign language—

(1) In fields needed to provide a full understanding of the areas, regions, or countries in which that language is commonly used; or

(2) In international studies and the international aspects of professional and other fields of study.

(b) Maintain specialized library collections and employ scholars engaged in research on topics of contemporary relevance to the purposes of the program as stated in § 656.1.

(c) Provide outreach and consultative services primarily at the national level.

(20 U.S.C. 1122(a) and (b); Conf. Rept., page 188, Sen. Rept., page 60)

§ 656.11 What types of centers receive assistance?

The Secretary may assist a National Resource Center that—

(a)(1) Focuses on a single country or on one or more world areas (such as East Asia, Africa, or the Middle East); and

(2) Offers instruction in the principal language or languages of that country or area; or

(b)(1) Focuses on international studies, or on the international aspects of contemporary issues or topics (such as international business or energy); and

(2) Makes instruction in modern foreign languages available to students undergoing training at the center.

(20 U.S.C. 1122(a)).

§ 656.12 What levels of instruction may a National Resource Center provide?

(a) A center may provide training—

(1) At the graduate and undergraduate level, including professional fields; or

(2) At the undergraduate level only.

(b) A four-year institution that provides instruction at the undergraduate level only must demonstrate to the Secretary in its application that its program is of national importance and is exemplary in terms of excellence and innovation.

(20 U.S.C. 1122(a); Sen. Rept., page 60, Conf. Rept. 188)

Subpart C—How Does One Apply for a Grant or Fellowship?

§ 656.20 How does an institution submit an application?

(a) An eligible institution may apply under this part for—

(1) Assistance for a National Resource Center;

(2) An allocation of National Resource Fellowships; or

(3) Both.

(b) The institution need file only one application.

(20 U.S.C. 1122)

§ 656.21 How does an individual apply for a fellowship?

(a) An institution of higher education that has received an allocation of fellowships shall notify potential applicants that fellowship awards are available.

(b) To be considered for a fellowship award, an individual must apply to an institution having an allocation of fellowships.

(c) An individual applicant must demonstrate that he or she meets the requirements in § 656.4.

(d) The institution acts as an agent for the Secretary in selecting fellows and disbursing the stipends.

(20 U.S.C. 1122(b))

Subpart D—How Does the Secretary Make a Grant?

§ 656.30 How does the Secretary evaluate an application under the National Resource Centers and Fellowships Program?

(a) The Secretary evaluates an application for a National Resource Center under the criteria in §§ 656.31 and 656.32.

(b)(1) The Secretary evaluates an application for an allocation of National Resource Fellowships under the criteria in §§ 656.31 and 656.33.

(2) In the case of an application for an allocation of National Resource Fellowships, the word "center," as used in § 656.31, means—

(i) A National Resource Center; or

(ii) In the case of an institution either not applying for or not receiving a grant for a National Resource Center, a concentration of resources focusing on a particular topic relevant to this part.

(c) The Secretary awards up to 125 possible points for these criteria. The maximum possible points for each criterion are shown in parentheses.

(20 U.S.C. 1122(a) and (b))

§ 656.31 What selection criteria does the Secretary use?

(a) *Plan of operation.* (15) (See 34 CFR 655.31(a))

(b) *Quality of key personnel.* (10) (See 34 CFR 655.31(b))

(c) *Budget and cost effectiveness.* (10) (See 34 CFR 655.31(c))

(d) *Evaluation plan.* (10) (See 34 CFR 655.31(d))

(e) *Adequacy of resources.* (5) (See 34 (CFR 655.31(e))

(f) *Commitment to the subject area on which the center focuses.* (15)

(1) The Secretary reviews each application for information that shows the applicant's commitment to the subject area on which the center focuses. (See § 656.11)

(2) The Secretary reviews each application for information that shows—

(i) The degree of institutional commitment to the subject area for which funding is sought as shown by the

institution's previous record of accomplishment and support for that subject area;

(ii) The extent to which the institution provides financial and other support to the center, to tenured faculty members of the center, and to qualified students in fields related to the center; and

(iii) The strength of the institution's library in the subject area on which the center focuses, and the extent to which the institution provides financial support for the acquisition of library materials in that subject area.

(g) *Quality of the center's instructional program.* (15)

(1) The Secretary reviews each application for information that shows the quality of the applicant's program of instruction in the subject area on which the center focuses.

(2) The secretary reviews each application for information that shows—

(i) The quality and extent of the center's course offerings;

(ii) The quality of the center's language training program; and

(iii) The extent to which the center employs a sufficient number of scholars to enable the center to carry out its purposes.

(h) *Quality of the center's relationships within the institution.* (10)

(1) The Secretary reviews each application for information that shows the quality of the center's relationships within the institution.

(2) The Secretary reviews each application for information that shows—

(i) The extent to which the center includes multi- and interdisciplinary instruction; and

(ii) The extent to which the center has entered into cooperative arrangements with other departments, schools, and professional programs of the institution.

(i) *Overseas activities.* (10)

(1) The Secretary reviews each application for information that shows—with regard to the subject area on which the center focuses—the extent of the applicant's overseas activities and cooperation with foreign scholars, institutions, and governments.

(2) The Secretary looks for information that shows—

(i) The adequacy of the provisions for relevant overseas experience for faculty and students in the center's program; and

(ii) The extent to which provision is made for cooperation with foreign scholars, institutions, and governments.

(j) *Need and potential impact.* (15)

(1) The Secretary reviews each application for information that shows the need for, and potential impact of, the applicant's proposed activities.

(2) The Secretary looks for information that shows—

(i) The extent to which the proposed activities are needed at the institution or are needed nationwide;

(ii) The extent to which an improved program in language and area studies or language and international studies will be available at the applicant institution at the termination of the grant period; and

(iii) The potential impact of the proposed project in improving the knowledge of languages, areas, or international studies at the national level.

(20 U.S.C. 1122)

§ 656.32 What additional criterion does the Secretary use for National Resource Centers?

(a) *Outreach activities* (10).

(1) The Secretary reviews each application for assistance for a National Resource Center for information that shows the extent of the applicant's outreach activities.

(2) The Secretary looks for information that shows—

(i) The quality of the services the center provides to persons and organizations outside the center as these services relate to the provision of information and training primarily for national groups, but, also, for regional and local groups; and

(ii) The contribution of these outreach services to curriculum development, faculty development, pre-professional training, and public understanding.

(20 U.S.C. 1122 Sen. Rept. 60-61)

§ 656.33 What additional criteria does the Secretary use for National Resource Fellowships?

(a) *Relevance to national needs and priorities.* (5)

(1) The Secretary reviews each application for an allocation of National Resource Fellowships for information that shows that the fields of study in which fellowships are to be awarded are relevant to current and anticipated national needs and priorities.

(2) The Secretary looks for information that shows—

(i) The relationship between the applicant's proposed program of instruction and national needs and priorities; and

(ii) The institution's recent record of placement of graduate students.

(b) *Degree and linguistic proficiency requirements.* (5)

The Secretary reviews each application for the adequacy of the degree requirements, including the requirements for language proficiency, for students enrolled in the program.

(20 U.S.C. 1122(b))

§ 656.34 What priorities may the Secretary establish for National Resource Centers?

(a) The Secretary may establish priorities each year for the selection of the National Resource Centers. These priorities relate to the following:

(1) *Educational levels;* for example, centers whose instructional level is both undergraduate and graduate or centers emphasizing undergraduate instruction only.

(2) *Types of centers;* for example, centers focusing on a single area; on international studies; or on particular issues or topics, such as business or energy; or on a combination of these.

(3) *Specific countries or geographic regions or areas of the world;* for example, Canada or Mexico, East Asia, Africa, or the Middle East.

(b) The Secretary announces any priorities in the application notice published in the Federal Register.

(20 U.S.C. 1122(a))

§ 656.35 What priorities may the Secretary establish for National Resource Fellowships?

(a) The Secretary may establish priorities each year for the allocation of the National Resource Fellowships. These priorities relate to the following:

(1) Certain world areas, countries, languages, levels of language offerings, academic disciplines, topics, issues, or combinations of any of these categories; for example, a specific language, such as Chinese; a world area or country, such as East Asia or Mexico; an academic discipline, such as linguistics or sociology; or an issue or topic, such as population growth and planning or international trade and business.

(b) The Secretary may assign lower priority to the following:

(1) Certain languages or world areas or levels of study for certain languages or world areas if the Secretary determines that adequate instruction exists nationwide.

(2) Certain applicants for fellowship support, such as—

(i) Those who already have the equivalent fluency of native speakers in the language for which the award is sought and, therefore, have less need for instruction; or

(ii) Those at certain educational levels; for example, undergraduates.

(3) Certain overseas regions or countries.

(c) The Secretary announces any priorities in the application notice published in the Federal Register.

(20 U.S.C. 1122(b))

§ 656.36 What is the duration of a project for a National Resource Center?

The Secretary may approve a project period of up to three years.

(Sen. Rept., page 61)

§ 656.37 What is the duration of a National Resource Fellowship?

(a) The Secretary may approve a project period at an institution for up to three years.

(b) An institution may award a National Resource Fellowship to a student for—

(1) One academic year;

(2) One academic year and one summer session;

(3) Subject to paragraph (c) of this section, one summer session; or

(4) As many academic terms or summer sessions as it takes to complete his or her academic study.

(c) A student may receive a fellowship for a summer session only if the fellow is enrolled in a summer program that offers the equivalent of one academic year of modern foreign language study.

(20 U.S.C. 1122(b), Sen. Rept., page 61)

Subpart E—What Conditions Must Be Met by a Grantee?

§ 656.40 National Resource Centers: which costs are allowable, and which costs are unallowable?

(a) The recipient of a grant under this part for a National Resource Center may use its grant to pay all or part of the cost of establishing or operating a center. This includes—

(1) Subject to the limitation of § 656.43, the cost of faculty, staff, and student travel in foreign areas, regions, or countries;

(2) The cost of teaching and research materials;

(3) The cost of curriculum planning and development;

(4) The cost of bringing visiting scholars and faculty to the center to teach or conduct research;

(5) The cost of training and improvement of staff; and

(6) The cost of maintaining a library collection, if the Secretary determines that the collection has national importance under the purposes of the Act.

(b) EDGAR, 34 CFR 75.530–75.534, makes reference to applicable cost principles.

(c) The following costs are unallowable:

(1) Construction and other capital costs.

(2) Equipment costs exceeding five percent of the grant amount.

(20 U.S.C. 1122(a)(2))

§ 656.41 What is the amount of a fellowship?

(a) A fellowship under this part includes the cost of tuition and fees and an allowance for maintenance.

(b) The Secretary announces the amount of maintenance allowances and the amount of summer fellowships, as well as any other fellowships costs, in the annual application notice published in the Federal Register.

(20 U.S.C. 1122(6))

§ 656.42 What is the payment method of fellowships?

(a) An institution of higher education particpating in the fellowship program makes payments to fellows in installments during the term of the fellowship.

(b) An institution shall make a payment only to a fellow who is enrolled and in good standing.

(c)(1) A fellow shall notify the institution that made the award of any overpayment or underpayment of award benefits.

(2) The insitution shall make appropriate adjustments.

(20 U.S.C. 1122(b))

§ 656.43 What are the limitations on use of funds for undergraduate travel?

No funds may be expended under this part for undergraduate travel—

(a) Without the advance approval of the Secretary; and

(b) Unless the Secretary determines that these funds will be expended as part of a formal program of supervised study.

(20 U.S.C. 1122(c))

§ 656.44 Under what circumstances must an institution terminate a fellowship?

An insitution shall terminate a fellowship to an individual if the individual is:

(a) No longer enrolled at the institution; or

(b) No longer in good standing.

(20 U.S.C. 1122(b))

Subpart F—What Are the Administrative Responsibilities of a Fellow?

§ 656.50 What are the reporting requirements for a fellow?

(a) A fellow shall inform the institution of any change in his or her program of study or academic status.

(b) After each award period, the fellow shall submit to the Secretary, through the grantee institution, a full report of his or her—

(1) Accomplishment under the award; and

(2) Future study or employment plans.

(c) Until the fellow submits the report referred to in paragraph (b) of this section, an institution may not award further fellowship funds to that person.

(20 U.S.C. 1122(b))

The Secretary amends Title 34 of the Code of Federal Regulations by adding a new Part 658 to read as follows:

PART 658—UNDERGRADUATE INTERNATIONAL STUDIES AND FOREIGN LANGUAGE PROGRAM

Subpart A—General

Sec.

658.1 What is the Undergraduate International Studies and Foreign Language Program?

658.2 Who is eligible to apply for assistance under this program?

658.3 What regulations apply to the Undergraduate International Studies and Foreign Language Program?

658.4 What definitions apply to the Undergraduate International Studies and Foreign Language Program?

Subpart B—What Kinds of Projects Does the Secretary Assist Under This Program?

658.10 For what kinds of projects does the Secretary assist institutions of higher education?

658.11 What projects and activities may a grantee conduct under this program?

658.12 For what kinds of projects does the Secretary assist associations and organizations?

Subpart C—[Reserved]

Subpart D—How Does the Secretary Make a Grant?

658.30 How does the Secretary evaluate an application?

658.31 What selection criteria does the Secretary use?

658.32 What additional criteria does the Secretary apply to institutional application?

658.33 What additional criterion does the Secretary apply to applications from organizations and associations?

658.34 What additional factors does the Secretary consider in selecting grant recipients?

658.35 What priorities may the Secretary establish?

658.36 What is the duration of a grant?

Subpart E—What Conditions Must be Met by a Grantee?

658.40 What are the limitations on allowable costs?

Authority: Sec. 604 of Publ. L. 96–374, Title VI.

Subpart A—General

§ 658.1 What is the Undergraduate International Studies and Foreign Language Program?

The Undergraduate International Studies and Foreign Language Program

provides Federal financial assistance to strengthen and improve undergraduate instruction in international studies and foreign languages in the United States.

(20 U.S.C. 1124)

§ 658.2 Who is eligible to apply for assistance under this program?

The following are eligible to apply for assistance under this program:

(a) Institutions of higher education.

(b) Combinations of institutions of higher education.

(c) Public and nonprofit private agencies and organizations, including professional and scholarly associations.

(20 U.S.C. 1124(a) and (b))

§ 658.3 What regulations apply to the Undergraduate International Studies and Foreign Language Program?

The following regulations apply to this program:

(a) The regulations referred to in 34 CFR 655.3(a) and (b).

(b) The regulations in this Part 658.

(20 U.S.C. 1121–1127)

§ 658.4 What definitions apply to the Undergraduate International Studies and Foreign Language Program?

The definitions in 34 CFR 655.4 apply to this program.

(20 U.S.C. 1121–1127)

Subpart B—What Kinds of Projects Does the Secretary Assist Under This Program?

§ 658.10 For what kinds of projects does the Secretary assist institutions of higher education?

(a) The Secretary may provide assistance to an institution of higher education to plan, develop, and carry out a comprehensive program to strengthen and improve undergraduate instruction in international studies and foreign languages.

(b) The proposed comprehensive program must—

(1) Include plans to initiate new or revised courses in international studies;

(2) Make instruction in foreign languages available to students in the program; and

(3) Take place primarily in the United States, and cover both a summer and an academic year.

(c) The comprehensive program may focus on—

(1) International or global studies;

(2) A single world area and its languages; or

(3) Issues or topics, such as environmental studies or international business.

(20 U.S.C. 1124(a))

§ 658.11 What projects and activities may a grantee conduct under this program?

The Secretary awards grants under this part to assist projects and activities that are an integral part of a comprehensive program. These include the following:

(a) Planning for the development and expansion of the undergraduate curriculum in international studies and modern foreign languages.

(b) Teaching, research, curriculum development, and related activities, including—

(1) Faculty workshops, conferences, and special lectures;

(2) Developing and testing new curricular materials, including self-instructional materials in foreign languages, or specialized language materials dealing with a particular subject matter (such as business or law);

(3) Initiating new and revised courses in international studies and foreign languages;

(4) Developing ways to use the media, or developing projects to improve the effectiveness of sharing resources, and materials;

(5) Developing standards to identify successful strategies for incorporating international aspects into the curriculum.

(c) Training faculty members in foreign countries or bringing foreign scholars to U.S. institutions.

(d) Placing U.S. faculty members in internships with international associations or with governmental and nongovernmental organizations in the U.S. or abroad to improve their understanding of international affairs.

(e) Initiating special bi-national or bilateral programs.

(f) Integrating undergraduate education with master's degree programs.

(g) Developing an international dimension in teacher training.

(h) Combining the teaching of international studies with professional or pre-professional training.

(20 U.S.C. 1124(a))

§ 658.12 For what kinds of projects does the Secretary assist associations and organizations?

The Secretary awards grants under this part to assist associations and organizations proposing projects that will make an especially significant contribution to strengthening and improving undergraduate instruction in international studies and foreign languages.

(20 U.S.C. 1124(b))

Subpart C—[Reserved]

Subpart D—How Does the Secretary Make a Grant?

§ 658.30 How does the Secretary evaluate an application?

(a) The Secretary evaluates an application from an institution of higher education on the basis of the criteria in §§ 658.31 and 658.32. The Secretary awards up to 85 possible points for these criteria.

(b) The Secretary evaluates an application from a public or nonprofit private agency, organization, or professional association on the basis of the criteria in §§ 658.31 and 658.33. The Secretary awards up to 75 possible points for these criteria.

(c) The maximum possible points for each criterion are indicated in parentheses.

(20 U.S.C. 1124)

§ 658.31 What selection criteria does the Secretary use?

(a) *Plan of operation.* (10) (See 34 CFR 655.31(a))

(b) *Quality of key personnel.* (10) (See 34 CFR 655.31(b))

(c) *Budget and cost effectiveness.* (10) (See 34 CFR 655.31(c))

(d) *Evaluation plan.* (5) (See 34 CFR 655.31(d))

(e) *Adequacy of resources.* (10) (See. 34 CFR 655.31(e))

(20 U.S.C. 1124)

§ 658.32 What additional criteria does the Secretary apply to institutional applications?

In addition to the criteria referred to in § 658.31, the Secretary applies the following criteria to applications submitted by institutions of higher education or by combinations of institutions of higher education:

(a) *Commitment to international studies.* (15)

(1) The Secretary reviews each application for information that shows the applicant's commitment to the international studies program.

(2) The Secretary looks for information that shows—

(i) The institution's current strength as measured by the number of international studies courses offered;

(ii) The extent to which planning for the implementation of the proposed program has involved the applicant's faculty, as well as administrators;

(iii) The institutional commitment to the establishment, operation, and continuation of the program as demonstrated by optimal use of available personnel and other resources; and

(iv) The institutional commitment to the program as demonstrated by the use of institutional funds in support of the program's objectives.

(b) *Elements of the proposed international studies program.* (15)

(1) The Secretary reviews each application for information that shows the nature of the applicant's proposed international studies program.

(2) The Secretary looks for information that shows—

(i) The extent to which the proposed activities will contribute to the implementation of a comprehensive program in international studies and foreign languages at the applicant institution;

(ii) The interdisciplinary aspects of the program;

(iii) The number of new and revised courses with an international perspective that will be added to the institution's programs; and

(iv) The applicant's plans to improve or expand language instruction.

(c) *Need for and prospective results of the proposed program.* (10)

(1) The Secretary reviews each application for information that shows the need for and the prospective results of the applicant's proposed program.

(2) The Secretary looks for information that shows—

(i) The extent to which the proposed activities are needed at the applicant institution;

(ii) The extent to which the proposed use of Federal funds will result in the implementation of a comprehensive program in international studies and foreign languages at the applicant institution;

(iii) The likelihood that the activities initiated with Federal funds will be continued after Federal assistance is terminated; and

(iv) The adequacy of the provisions for sharing the materials and results of the program with other institutions of higher education.

(20 U.S.C. 1124)

§ 658.33 What additional criterion does the Secretary apply to applications from organizations and associations?

In addition to the criteria referred to in § 658.31, the Secretary applies the following criterion to applications from organizations and associations:

Need for and potential impact of the proposed project in improving international studies and the study of modern foreign language at the undergraduate level. (30)

(a) The Secretary reviews each application for information that shows the need for and the potential impact of the applicant's proposed projects.

(b) The Secretary looks for information that shows—

(1) The extent to which the applicant demonstrates need for Federal funds for this project;

(2) The extent to which the applicant's proposed apportionment of Federal funds among the various budget categories for the proposed project will contribute to achieving results;

(3) The international nature and contemporary relevance of the proposed project;

(4) The extent to which the proposed project will make an especially significant contribution to the improvement of the teaching of international studies or modern foreign languages at the undergraduate level;

(5) The extent to which the proposed project will have major regional and national impact on undergraduate education; and

(6) The adequacy of the applicant's provisions for sharing the materials and results of the proposed project with the higher education community.

(20 U.S.C. 1124(b); Sen. Rept. page 62)

§ 658.34 What additional factors does the Secretary consider in selecting grant recipients?

In addition to applying the selection criteria in, as appropriate, §§ 658.31, 658.32, and 658.33, the Secretary seeks to—

(a) Achieve an equitable geographic distribution of awards throughout the U.S.; and

(b) Encourage diversity by ensuring that a variety of types of projects and institutions receive funding.

(20 U.S.C. 1124; Conf. Rept., page 188)

§ 658.35 What priorities may the Secretary establish?

(a) The Secretary may establish in any given year specific categories for priority funding consideration in the Undergraduate International Studies and Foreign Language Program.

These priorities relate to the following:

(1) Types of eligible parties; for example, institutions, organizations, or associations.

(2) Types of institutions; for example, universities, colleges, or community colleges.

(3) Categories of activities or projects from among those listed under § 658.10 or § 658.11.

(b) The Secretary announces any priorities in the application notice published in the Federal Register.

(20 U.S.C. 1124)

§ 658.36 What is the duration of a grant?

(a) In awarding a grant to an institution of higher education under this part, the Secretary usually approves a project period of two years.

(b) In awarding a grant to a combination of institutions of higher education under this part, the Secretary usually approves a project period of three years.

(c) Associations or organizations are also eligible to apply for multi-year project periods.

(20 U.S.C. 1124)

Subpart E—What Conditions Must be Met by a Grantee?

§ 658.40 What are the limitations on allowable costs?

(a) Allowable costs under a grant for an undergraduate international studies program are direct and indirect costs incurred by the grantee in carrying out the approved project, subject to the applicable cost principles provided or referenced in EDGAR, 34 CFR 75.530 through 75.534, except that—

(1) Construction and other capital costs are not allowable; and

(2) Equipment costs may not exceed five percent of the grant amount.

(20 U.S.C. 1124)

The Secretary amends Title 34 of the Code of Federal Regulations by adding a new Part 660 to read as follows:

PART 660—THE INTERNATIONAL RESEARCH AND STUDIES PROGRAM

Subpart A—General

Sec.

660.1 What is the International Research and Studies Program?
660.2 Who is eligible to apply for grants under this program?
660.3 What regulations apply to the International Research and Studies Program?
660.4 What definitions apply to the International Research and Studies Program?

Subpart B—What Kinds of Projects Does the Secretary Assist Under This Program?

660.10 What activities does the Secretary assist?

Subpart C—[Reserved]

Subpart D—How Does the Secretary Make a Grant?

660.30 How does the Secretary evaluate an application?
660.31 What selection criteria does the Secretary use for all applications for a grant?
660.32 What additional selection criteria does the Secretary use for an application for a research project, a survey, or a study?

660.33 What additional selection criteria does the Secretary use for an application to develop specialized instructional materials?
660.34 What priorities may the Secretary establish?

Subpart E—What Conditions Must Be Met by a Grantee?

660.40 What are the limitations on allowable costs?

Authority: Sec. 605, Higher Education Act of 1965, as amended (20 U.S.C. 1125), unless otherwise noted.

Subpart A—General

§ 660.1 What is the International Research and Studies Program?

(a) The International Research and Studies Program provides Federal financial assistance—

(1) To improve and expand instruction in modern foreign languages and area and other related studies; and

(2) To strengthen international understanding on all educational levels in the United States.

(b) To meet the objectives of paragraph (a) of this section, the program provides assistance for—

(1) Research;

(2) Studies;

(3) Surveys; and

(4) The development of specialized materials.

(20 U.S.C. 1125 Sen. Rept. No. 96-733, 96th Congress, 2nd Session, page 62)

§ 660.2 Who is eligible to apply for grants under this program?

The following are eligible to apply for grants under this part:

(a) Public and private agencies, organizations, and institutions.

(b) Individuals.

(20 U.S.C. 1125 Sen. Rept. No. 96-733, 96th Congress, 2nd Session, p. 59, 1980)

§ 660.3 What regulations apply to the International Research and Studies Program?

The following regulations apply to this program:

(a) The regulations referred to in 34 CFR 655.3 (a) and (b).

(b) The regulations in this Part 660.

(20 U.S.C. 1121-1127)

§ 660.4 What definitions apply to the International Research and Studies Program?

The definitions in 34 CFR 655.4 apply to this program.

(20 U.S.C. 1121-1127)

Subpart B—What Kinds of Projects Does the Secretary Assist under This Program?

§ 660.10 What activities does the Secretary assist?

An applicant may apply for funds to carry out any of the following types of activites:

(a) Studies and surveys to determine the need for increased or improved instruction in—

(1) Modern foreign languages; and

(2) Area studies and related fields needed to provide full understanding of the places in which those languages are commonly used.

(b) Research and studies—

(1) On more effective methods of instruction in modern foreign languages, area studies, or related fields; or

(2) To evaluate competency in those foreign languages, area studies, or related fields.

(c) The development of specialized materials for use by students and teachers of modern foreign languages, area studies, and related fields.

(d) Research, surveys, studies, or the development of instructional materials that serve to enhance international understanding.

(e) Other projects of research or the development of materials that further the purposes of Part A of Title VI of the Act and Part N of Title III of the Elementary and Secondary Education Act of 1965, as amended.

(20 U.S.C. 1125)

Subpart C—[Reserved]

Subpart D—How Does the Secretary Make a Grant?

§ 660.30 How does the Secretary evaluates an application?

(a) The Secretary evaluate an application for a research project, a study, or a survey on the basis of the criteria in §§ 660.31 and 660.32.

(b) The Secretary evaluates an application for the development of specialized instructional materials on the basis of the criteria in §§ 660.31 and 660.33.

(c) The Secretary awards up to 100 possible points for these criteria. The maximum possible points for each criterion are shown in parentheses.

§ 660.31 What selection criteria does the Secretary use for all applications for a grant?

(a) *Plan of operation.* (10) (See CFR 655.31(a))

(b) *Quality of key personnel.* (10) (See 34 CFR 655.31(b))

(c) *Budget and cost effectiveness.* (10) (See 34 CFR 655.31(c))

(d) *Evaluation plan.* (5) (See 34 CFR 655.31(d))

(e) *Adequacy of resources.* (5) (See 34 CFR 655.31(e))

(20 U.S.C. 1125)

§ 660.32 What additional selection criteria does the Secretary use for an application for a research project, a survey or a study?

In addition to the criteria referred to in § 660.31, the Secretary applies the following criteria to an application for assistance for a reserach project, a study, or a survey:

(a) *Need for the project.* (10)

The Secretary reviews each application for information that shows—

(1) A need for the proposed project in the field of studies on which the project focuses; and

(2) That the proposed project is likely to be helpful in determining present and future needs in foreign language and other fields in the context of the national interest of the United States.

(b) *Usefulness of expected results.* (10)

The Secretary reviews each application for information that shows the extent to which the results of the proposed project are likely to be used by other research projects or programs established for similar purposes.

(c) *Development of new knowledge.* (10)

The Secretary reviews each application for information that shows that the extent to which the proposed project is likely to develop new knowledge that will contribute to the purposes of Part A of Title VI of the Act or Part N of Title III of the Elementary and Secondary Education Act of 1965, as amended.

(d) *Formulation of problems and knowledge of related research.* (10)

The Secretary reviews each application for information that shows that problems, questions, or hypotheses to be dealt with by the applicant—

(1) Are well formulated; and

(2) Reflect adequate knowledge of related research.

(e) *Specificity of statement of procedures.* (10)

The Secretary reviews each application for the specificity and adequacy of the statement of procedures to be followed, including sampling techniques, controls, data to be gathered, and statistical and other analyses to be undertaken.

(f) *Adequacy of methodology and scope of project.* (10)

The Secretary reviews each application for information that shows—

(1) The adequacy of the proposed teaching, testing, and research methodology; and

(2) The size, scope, and duration of the proposed project.

(20 U.S.C. 1125; Sen. Rept. No. 96-733, 96th Congress, 2nd Session, page 62)

§ 660.33 What additional selection criteria does the Secretary use for an application to develop specialized instructional materials?

In addition to the criteria referred to in § 660.31, the Secretary applies the following criteria to an application for assistance to develop specialized instructional materials.

(a) *Need for the project.* (10)

The Secretary reviews each application for information that shows that—

(1) The proposed materials are needed in the educational field of study on which the project focuses; and

(2) The language or languages; the area, region, or country; or the issues or studies for which the materials are to be developed are of sufficient priority for, and of potential significance to, the national interest to warrant financial support by the Federal Government.

(b) *Potential for the use of materials in other programs.* (10)

The Secretary reviews each application for information that shows the extent to which the proposed materials may be used elsewhere in the United States.

(c) *Account of related materials.* (10)

The Secretary reviews each application for information that shows that—

(1) All existing related or similar materials have been accounted for and the critical commentary on their adequacy is appropriate and accurate; and

(2) The proposed materials will not duplicate any existing adequate materials.

(d) *Likelihood of achieving results.* (10)

The Secretary reviews each application for information that shows that the outlined methods and procedures for preparing the materials are practicable and can be expected to produce the anticipated results.

(e) *Expected contribution to other programs.* (10)

The Secretary reviews each application for information that shows the extent to which the proposed work may contribute significantly to the strengthening, expansion, or improvement in the United States of programs of foreign language studies, area studies, or international studies.

(f) *Description of final form of materials.* (5)

The Secretary reviews each application for information that shows a high degree of specificity in the description of the contents and final form of the proposed materials.

(g) *Provisions for pretesting and revision.* (5)

The Secretary reviews each application for information that shows that adequate provision has been made for—

(1) Pretesting the proposed materials; and

(2) If necessary, revising the proposed materials before publication.

(20 U.S.C. 1125)

§ 660.34 What priorities may the Secretary establish?

(a) The Secretary may establish in any given year categories for priority funding consideration in the International Research and Studies Program. These priorities relate to the following:

(1) Categories of eligible projects described in § 660.10.

(2) Specific languages or regions for study or materials development; for example, the Near or Middle East, South Asia, Southeast Asia, Eastern Europe, Inner Asia, the Far East, Africa or Latin America, or the languages of those regions.

(3) Topics of research and studies; for example, language acquisition processes, methodology of foreign language instruction, foreign language proficiency testing, or assessments of resources and needs.

(4) Levels of education; for example, elementary, secondary, postsecondary or university-level education, or teacher education.

(b) The Secretary announces any priorities in the application notice published in the Federal Register.

(20 U.S.C. 1125)

Subpart E—What Conditions Must Be Met by a Grantee?

§ 660.40 What are the limitations on allowable costs?

(a) A grant under this part may be used to pay all or part of the cost of conducting approved research or an approved study, survey, or materials, development project.

(b) General cost principles in EDGAR, 34 CFR 75.530 through 75.534, apply to this part.

(c) Funds awarded under this part may not be used for training of students and teachers.

(20 U.S.C. 1125)

The Secretary revises Part 667 of Title 34 of the Code of Federal Regulations to read as follows:

PART 667—THE INTERNATIONAL UNDERSTANDING PROGRAM

Subpart A—General

Sec.
667.1 What is the International Understanding Program?
667.2 Who is eligible to apply for a grant under this program?
667.3 What regulations apply to the International Understanding Program?
667.4 What definitions apply to the International Understanding Program?

Subpart B—What Kinds of Projects Does the Secretary Assist Under This Program?

667.10 What types of projects does the Secretary assist?

Subpart C—[Reserved]

Subpart D—How Does the Secretary Make a Grant?

667.30 How does the Secretary evaluate an application?
667.31 What selection criteria does the Secretary use?
667.32 What priorities may the Secretary establish?

Subpart E—What Conditions Must Be Met by a Grantee?

667.41 What costs are ineligible?

Authority: Part N of Title III of the Elementary and Secondary Education Act of 1965, (Pub. L. No. 89-10), as amended, 20 U.S.C. 3063-3065.

Subpart A—General

§ 667.1 What is the International Understanding Program?

The International Understanding Program provides Federal financial assistance to stimulate, at all levels of education, programs to—

(a) Increase the understanding of students and the public in the United States about the cultures, actions, and interconnections of nations and peoples; and

(b) Enable these students and the public to better evaluate the international and domestic impact of major national policies and actions of the United States.

(20 U.S.C. 3064)

§ 667.2 Who is eligible to apply for a grant under this program?

Any public or private agency or organization is eligible to apply for a grant under this program. This includes, but is not limited to, institutions of higher education, State and local educational agencies, professional associations, educational consortia, and organizations of teachers.

(20 U.S.C. 3064(a))

§ 667.3 What regulations apply to the International Understanding Program?

The following regulations apply to this program:

(a) The regulations referred to in 34 CFR 655.3 (a) and (b).

(b) The regulations in this Part 667.

(20 U.S.C. 3063–3065)

§ 667.4 What definitions apply to the International Understanding Program?

The definitions in 34 CFR 655.4 apply to this program.

(20 U.S.C. 3063–3065)

Subpart B—What Kinds of Projects Does the Secretary Assist under This Program?

§ 667.10 What types of projects does the Secretary assist?

(a) An applicant may apply for a grant to conduct any of the following types of projects:

(1) The in-service training of teachers and other educational personnel with regard to the cultures, actions, and interconnections of nations and peoples.

(2) The development of materials to link language learning to international studies.

(3) The compilation—in forms useful to various types of educational programs—of existing information and resources pertaining to—

(i) Cultures, actions, and interconnections of nations and peoples;

(ii) Regions of the world; or

(iii) Global issues.

(4) The dissemination—to educators and educational officials on their request—of information and resources pertaining to the cultures, actions, and interconnections of nations.

(5) The introduction by a local educational agency (LEA) of instruction in foreign languages—

(i) Designated by the Secretary as having critical importance for the Nation; and

(ii) That have not been offered by the schools of that LEA in the three academic years ending prior to the calendar year in which the grant is made.

(b) The projects described in paragraphs (a)(1) through (a)(4) of this section may include projects at all levels of education, as well as projects conducted as part of community, adult, and continuing education programs.

(20 U.S.C. 3064)

Subpart C—[Reserved]

Subpart D—How Does the Secretary Make a Grant?

§ 667.30 How does the Secretary evaluate an application?

(a) The Secretary evaluates an application on the basis of the criteria in § 667.31.

(b) The criteria are equally weighted.

(c) In addition to considering the criteria in § 667.31, the Secretary seeks to achieve a wide distribution of awards throughout the United States.

(20 U.S.C. 3064)

§ 667.31 What selection criteria does the Secretary use?

(a) *Plan of operation.* (See 34 CFR 655.31(a))

(b) *Quality of key personnel.* (See 34 CFR 655.31(b))

(c) *Budget and cost effectiveness.* (See 34 CFR 655.31(c))

(d) *Evaluation plan.* (See 34 CFR 655.31(d))

(e) *Adequacy of resources.* (See 34 CFR 655.31(e))

(f) *Need.* (1) The Secretary reviews each application for information that shows the need for the proposed project.

(2) The Secretary looks for information that shows—

(i) That the proposal is based on a demonstrated need;

(ii) That the need is of sufficient importance to warrant Federal assistance; and

(iii) A direct relationship between the expressed need and the plan, goals, and objectives of the project.

(g) *Relevance to the International Understanding Program.* (1) The Secretary reviews each application for information that shows the relevance of the proposed project to the International Understanding Program.

(2) The Secretary looks for information that shows that the proposed project is likely to—

(i) Increase the understanding of students and the public about the cultures, actions, and interconnections of nations and peoples; and

(ii) Enable these students and the public to make more informed judgments with respect to the policies and actions of the United States.

(h) *Non-Federal resources.* (1) The Secretary reviews each application for information that shows the applicant's commitment to the maximum use of non-Federal resources for the proposed project.

(2) The Secretary looks for information that shows—

(i) The applicant's use of non-Federal resources in the establishment of the proposed project; and

(ii) The applicant's use of non-Federal resources in the operation of the proposed project.

§ 667.32 What priorities may the Secretary establish?

(a) The Secretary may announce in any given year that all or portions of the funds available for awards will be reserved for projects that focus on specific aspects or authorized activities from among the types of projects in § 667.10.

(b) These priorities relate to the following:

(1) Projects involving the media.

(2) Projects that focus on particular global issues or regional or cultural studies.

(3) Projects that serve clientele—

(i) From particular levels of education;

(ii) From specific disciplines; or

(iii) Associated with certain educational endeavors.

(c) The Secretary announces any priorities referred to in paragraph (a) of this section in the application notice published in the Federal Register.

(20 U.S.C. 3064)

Subpart E—What Conditions Must Be Met by a Grantee?

§ 667.41 What costs are ineligible?

Funds awarded under this part may not be used for the acquisition of equipment or the remodeling of facilities.

(20 U.S.C. 3064 (b)(1)).

[FR Doc. 80-40521 Filed 12-30-80; 8:45 am]

BILLING CODE 4000-01-M

Federal Register

Wednesday
December 31, 1980

Part IX

Department of Education

Institutional Grants for Graduate and Professional Study; Proposed Rulemaking

DEPARTMENT OF EDUCATION

34 CFR Part 648

Institutional Grants for Graduate and Professional Study

AGENCY: Department of Education.

ACTION: Notice of proposed rulemaking.

SUMMARY: The Secretary proposes regulations to implement the Institutional Grants for Graduate and Professional Study program. These regulations implement Title IX, Part A of the Higher Education Act of 1965, as amended by the Education Amendments of 1980 and to conform these regulations with the Education Division General Administrative Regulations (EDGAR). These regulations describe the purpose of the program and specify the selection criteria to be used in evaluating applications for institutional grants for graduate and professional study. These regulations also described the application procedures, eligibility requirements, and the terms and conditions of an award.

DATES: Interested persons are invited to submit comments, suggestions, or objections regarding these proposed regulations on or before February 17, 1981.

ADDRESSES: Comments should be addressed to Donald N. Bigelow, Chief, Graduate Training Branch, Division of Training and Facilities, Room 3060, ROB #3, 400 Maryland Avenue, SW., Washington, D.C. 20202.

FOR FURTHER INFORMATION CONTACT: Donald N. Bigelow, Chief, Graduate Training Branch. Telephone number (202) 245-2347.

SUPPLEMENTARY INFORMATION: The Education Amendments of 1980 make minor changes in Title IX, Part A of the Higher Education Act. The amendments delete the phrase, "to strengthen, improve, and where necessary, expand", and replace it with, "to maintain, strengthen, and improve graduate and professional school programs." These regulations implement that change.

A separate regulation has been developed for Part A of Title IX of the Act, instead of merging it with Parts B and C as had previously been done under the former regulations.

These regulations, for the first time, clarify the relationship of Part A to Part B as currently in effect by giving priority to projects that strengthen activities which support categories of fellowships funded under Title IX-B of the Act.

These proposed regulations reflect in § 648.31(a), (b), and (h) the concern experessed in the legislative history regarding the opportunity of predominantly minority institutions of higher education to participate in the program (S. Rep. No. 96-733, p. 73, 1980).

These regulations have been modified to reflect the format and criteria of EDGAR.

Invitation to Comment

Interested persons are invited to submit comments and recommendations regarding these proposed regulations. Written comments and recommendations may be sent to the address given at the beginning of this preamble. All comments received on or before February 17, 1981 will be considered in the development of the final regulations.

All comments submitted in response to these proposed regulations will be available for public inspection, during and after the comment period, in Room 3060, ROB#3, 7th and D Streets, SW., Washington, D.C., between the hours of 8:30 a.m. and 4:00 p.m., Monday through Friday of each week, except Federal holidays.

The Department particularly requests comments on whether the proposed regulations in this document would require the submission of information that is already being gathered by or is available from any other agency or authority of the United States.

Citation of Legal Authority

A citation of statutory or other legal authority is placed in parentheses on the line following each substantive provision of these regulations.

(Catalog of Federal Domestic Assistance No. 84.094, for Graduate and Professional Study Institutional Grants)

Dated: December 23, 1980.

Shirley M. Hufstedler,

Secretary of Education.

The Secretary proposes to revise Part 648 of Title 34 of the Code of Federal Regulations to read as follows:

PART 648—INSTITUTIONAL GRANTS FOR GRADUATE AND PROFESSIONAL STUDY

Subpart A—General

Sec.
648.1 Institutional grants for graduate and professional study.
648.2 Eligible parties.
648.3 Regulations that apply to the Institutional Grant Program.
648.4 Definitions.

Subpart B—What Kinds of Projects Does the Secretary Assist Under This Program?

648.10 Eligible activities.

Subpart C—How Is Application Made for a Grant?

648.20 How does one apply for funds?

Subpart D—How Is a Grant Made?

648.30 How does the Secretary evaluate an application?
648.31 What selection criteria does the Secretary use?

Subpart E—What Conditions Must a Grantee Meet?

648.40 Costs.

Authority: Part A of Title IX of the Higher Education Act as amended by Pub. L. 96-374 (94 Stat. 1367, 1487; 20 U.S.C. 1134-1134b).

Subpart A—General

§ 648.1 Institutional grants for graduate and professional study.

Institutional Grants for Graduate and Professional Study—referred to in these regulations as the Institutional Grant Program—provide Federal financial assistance to enable institutions of higher education to maintain, strengthen, and improve the quality of graduate and professional programs leading to an advanced degree (other than a medical degree), and to strengthen undergraduate programs when it is determined that strengthened undergraduate programs will contribute to the purposes of Title IX-A of the Act.

(20 U.S.C. 1134)

§ 638.2 Eligible parties.

Institutions of higher education are eligible to apply for a grant under this program.

(20 U.S.C. 1134; 1134b(b)(4))

§ 648.3 Regulations that apply to the Institutional Grant Program.

The following regulations apply to this program:

(a) The Education Division General Administrative Regulations (EDGAR) in 34 CFR Part 75 (Direct Grant Programs) and Part 77 (General); and

(b) The regulations in this Part 648.

§ 648.4 Definitions.

(a) *Definition in EDGAR.* The following terms used in this part are defined in 34 CFR Part 77.

Applicant.
Application.
Award.
Budget Period.
Department.
Secretary.

(b) The following definitions apply secifically to this Part:

"Act" means the Higher Education Act of 1965, as amended.

"Professional study" means post-baccalaureate study leading to the advanced degree that enables an

individual to enter a professional career, such as a Doctor of Jurisprudence, Master of Business Administration, Master of Public Affairs, or Master of Science in Engineering.

(20 U.S.C. 1134–1134b)

Subpart B—What Kinds of Projects Does the Secretary Assist Under This Program?

§ 648.10 Eligible activities.

Eligible activities include, but are not limited to, the following: faculty improvement; maintenance and improvement of quality of graduate and professional programs of study; acquisition of appropriate instructional equipment and materials; cooperative arrangements among graduate and professional schools; strengthening graduate and professional school administration; development of proposed graduate and professional programs; and needed innovation in graduate and professional programs.

(20 U.S.C. 1134b(b))

Subpart C—How Is Application Made for a Grant?

§ 648.20 How does one apply for funds?

(a) To apply for funds, an institution of higher education shall submit an application that responds to the criteria described in § 648.31.

(b) An application under this part must include the following:

(1) A description of the proposed graduate or professional project which contributes to achieving the program's goals.

(2) An assurance that the appropriate State entity that performs planning functions under Title I of the Act has been given an opportunity to offer recommendations on the application both to the applicant and to the Secretary.

(20 U.S.C. 1134a(c), 1143)

Subpart D—How Is a Grant Made?

§ 648.30 How does the Secretary evaluate an application?

(a) For applications of substantially equal quality, the Secretary gives priority to projects that strengthen activities that support categories of fellowships funded under Title IX–B of the Act.

(b)(1) The Secretary evaluates an application on the basis of the criteria in § 648.31.

(2) The Secretary awards up to 100 possible points for these criteria.

(3) The maximum possible score for each criterion is indicated in parentheses following the title of the criterion.

(20 U.S.C. 1134(b))

§ 648.31 What selection criteria does the Secretary use?

(a) *Plan of operation.* (15 points)

(1) The Secretary reviews each application for information that shows the quality of the plan of operation for the project.

(2) The Secretary looks for information that shows—

(i) High quality in the design of the project;

(ii) An effective plan of management that insures proper and efficient administration of the project;

(iii) A clear description of how the objectives of the project relate to the purpose of the program;

(iv) The way the applicant plans to use its resources and personnel to achieve each objective; and

(v) A clear description of how the applicant will provide equal access and treatment for eligible project participants who are members of groups that have been traditionally underrepresented, such as—

(A) Members of racial or ethnic minority groups;

(B) Women;

(C) Handicapped persons; and

(D) The elderly.

(b) *Quality of key personnel.* (15 points)

(1) The Secretary reviews each application for information that shows the quality of the key personnel the applicant plans to use on the project.

(2) The Secretary looks for information that shows—

(i) The qualifications of the project director (if one is to be used);

(ii) The qualifications of each of the other key personnel to be used in the project;

(iii) The time that each person referred to in paragraph (b)(2)(i) and (ii) of this section plans to commit to the project; and

(iv) The extent to which the applicant, as part of its nondiscriminatory employment practices, encourages applications for employment from persons who are members of groups that have been traditionally underrepresented, such as—

(A) Members of racial or ethnic minority groups;

(B) Women;

(C) Handicapped persons; and

(D) The elderly.

(3) To determine the qualifications of a person, the Secretary considers evidence of past experience and training, in fields related to the objectives of the project, as well as other information that the applicant provides.

(c) *Budget and cost effectiveness.* (10 points)

(1) The Secretary reviews each application for information that shows the project that has an adequate budget and is cost effective.

(2) The Secretary looks for information that shows—

(i) The budget for the project is adequate to support the project activities; and

(ii) Costs are reasonable in relation to the objectives of the project.

(d) *Evaluation plan.* (5 points)

(1) The Secretary reviews each application for information that shows the quality of the evaluation plan for the project.

(2) The Secretary looks for information that shows methods of evaluation that are appropriate for the projects, and to the extent possible, are objective and produce data that are quantifiable.

(e) *Adequacy of resources.* (5 points)

(1) The Secretary reviews each application for information that shows that the applicant plans to devote adequate resources to the project.

(2) The Secretary looks for information that shows—

(i) The facilities that the applicant plans to use are adequate; and

(ii) The equipment and supplies that the applicant plans to use are adequate.

(f) *Strength of the academic program.* (15 points)

The Secretary reviews each application for information that shows that the overall graduate or professional academic program of the institution is strong enough to assure the success of the proposed project.

(g) *Impact of the project on the institution.* (15 points)

The Secretary reviews each application for information that shows the project's proposed activities are likely to result in maintaining, strengthening, or improving programs in graduate and professional study in relation to the identified needs.

(h) *Activities proposed for underrepresented groups.* (10 points)

The Secretary reviews each application for information that shows the project proposes activities that would assist in providing graduate and professional education to persons with varied backgrounds and experiences including, but not limited to, members of minority groups and women who are underrepresented in colleges and universities and in the academic and professional career fields to which the education leads.

(i) *Cooperative arrangements.* (5 points)

The Secretary reviews each application for information that shows that in planning the project, the institution has considered, and where appropriate, has entered into cooperative arrangements with other graduate or professional units of the institution, or outside institutions or agencies in supportive efforts of mutual benefit.

(j) *Local, State or national priorities.* (5 points)

The Secretary reviews each application for information that shows the project is consistent with local, State, or national priorities. Any national priorities will be determined on the basis of documentation of national needs in the application submitted.

(20 U.S.C. 1134; 1134b(b))

Subpart E—What Conditions Must a Grantee Meet?

§ 648.40 Costs.

Funds awarded under these regulations may not be used for:

(a) Payment in excess of 66⅔ percent of the total cost of the approved project or activity;

(b) Payment in excess of 50 percent of the cost of the purchase or rental of books, audiovisual aids, scientific apparatus, or other materials or equipment, less any percent of such cost, as determined by the Secretary, that is paid from sums received (other than under this part) as Federal financial assistance; and

(c) Fellowship assistance to students.

(20 U.S.C. 1134(b)(c))

[FR Doc. 80-40527 Filed 12-30-80; 8:45 am]
BILLING CODE 4000-01-M

federal register

Wednesday
December 31, 1980

Part X

Department of Education

Law School Clinical Experience Program; Proposed Rulemaking

DEPARTMENT OF EDUCATION

34 CFR Part 639

Law School Clinical Experience Program

AGENCY: Department of Education.

ACTION: Notice of Proposed Rulemaking.

SUMMARY: The Secretary of Education proposes regulations for the Law School Clinical Experience Program. These regulations implement Title IX, Part E of the Higher Education Act of 1965, as amended by the Education Amendments of 1980. These proposed regulations will give better guidance to applicants and improve program management by broadly defining the types of projects the Secretary intends to support under this program. These regulations also specify the selection criteria to be used in evaluating applications.

DATES: Interested persons are invited to submit comments, suggestions, or objections regarding these proposed regulations on or before February 17, 1981.

ADDRESSES: Comments should be addressed to: Donald N. Bigelow, Chief, Graduate Training Branch, Division of Training and Facilities, (Room 3060, ROB#3), 400 Maryland Avenue, SW., Washington, D.C. 20202.

FOR FURTHER INFORMATION CONTACT: Donald N. Bigelow, Telephone (202) 245-2347.

SUPPLEMENTARY INFORMATION: The Law School Clinical Experience Program provides assistance to accredited law schools to establish or expand their programs of clinical experience for students in the practice of law. Clinical programs are designed to instill professional responsibility and to improve learning among law students, through actual or simulated legal services to clients, by clinical staff and students. Under the provisions of the Higher Education Act, prior to reauthorization, support has been provided almost solely to those programs concerned with the trial and preparation of cases. The Higher Education Act, as amended, broadens the focus of the program to include training for lawyers in a wide variety of lawyering skills through simulated experiences as well as actual client services. However, consistent with the legislative history of the statute, preference in the award of funds will continue to be given to those programs providing experience in the preparation and trial of actual cases, including administrative cases and the settlement of controversies outside the courtroom.

The legislation permits the Secretary to pay up to 90 percent of the costs of projects at law schools. The proposed regulations permit the Secretary to establish annually a lower maximum Federal share. In implementing this provision we propose to establish, in the application notice, for fiscal year 1981 a maximum Federal share of 80 percent.

The proposed regulations include sections on eligible parties, authorized activities, selection criteria to be used by the Secretary in evaluating applications, and eligible project costs.

Invitation to Comment

Interested persons are invited to submit comments and recommendations regarding the proposed regulations. Written comments and recommendations may be sent to the address given at the beginning of this preamble. All comments received on or before February 17, 1981 will be considered in the development of the final regulations.

All comments submitted in response to these proposed regulations will be available for public inspection, during and after the comment period, in Room 3060, ROB#3, 7th and D Street, SW., Washington, D.C. between the hours of 8:30 a.m. and 4:00 p.m., Monday through Friday of each week, except Federal holidays.

The Department particularly requests comments on whether the proposed regulations in this document would require the submission of information that is already being gathered by or is available from any other agency or authority of the United States.

Citation of Legal Authority

A citation of statutory or other legal authority is placed in parentheses on the line following each substantive provision of these regulations.

Dated: December 23, 1980.

Shirley M. Hufstedler,

Secretary of Education.

(Catalog of Federal Domestic Assistance No. 84.097, Law School Clinical Experience Program)

The Secretary proposes to revise Part 639 of Title 34 of the Code of Federal Regulations to read as follows:

PART 639—LAW SCHOOL CLINICAL EXPERIENCE PROGRAM

Subpart A—General

Sec.
639.1 Law School Clinical Experience Program.
639.2 Eligible parties.
639.3 Regulations that apply to the Law School Clinical Experience Program.
639.4 Definitions.

Subpart B—What Kinds of Projects Does the Secretary Assist Under This Program?

639.10 Project activities.

Subpart C—[Reserved]

Subpart D—How Is a Grant Made?

639.30 How does the Secretary evaluate an application?
639.31 What selection criteria does the Secretary use?

Subpart E—What Conditions Must a Grantee Meet?

639.40 Costs.

Authority: Part E of Title IX of the Higher Education Act as amended by Pub. L. 96-374 (94 Stat. 1367, 1487; 20 U.S.C 1134n-1134p).

Subpart A—General

§ 639.1 Law School Clinical Experience Program.

(a) The Law School Clinical Experience Program provides assistance to accredited law schools for establishing or expanding programs of clinical experience for students in the practice of law.

(b) Expanding programs of clinical experience include, but is not limited to, any of the following:

(1) Development of new areas of clinical experience;

(2) Increase in the number of participating students;

(3) Provision of appropriate and improved supervision; and

(4) Development and implementation of new teaching techniques.

(20 U.S.C. 1134n)

§ 639.2 Eligible parties.

The following are eligible to apply:

(a) Individual law schools that have been accredited by a nationally recognized agency approved by the Secretary.

(b) A combination or consortium of accredited law schools.

(20 U.S.C. 1134n(d))

§ 639.3 Regulations that apply to the Law School Clinical Experience Program.

(a) The following regulations apply to grants under the Law School Clinical Experience Program:

(1) The Education Divison General Administrative Regulations (EDGAR) in 34 CFR Part 75 (Direct Grant Programs) and 34 CFR Part 77 (General); and

(2) The regulations in this Part 639.

(b) If the Secretary decides to issue contracts under this program, they will be issued in accordance with the provisions of 41 CFR Part 34.

§ 639.4 Definitions.

(a) *Definitions in EDGAR.* The following terms used in this part are defined in EDGAR, 34 CFR Part 77:

Applicant.	Department.
Application.	Grant.
Award.	Project.
Contract.	Secretary.

(b) *Definitions that apply to this part.* The following definition applies to this part:

"Simulation" is a learning exercise that examines and helps to explain a theory or concept by requiring a law student, as an active participant, to simulate the role of a lawyer confronted with a legal problem of a client.

(20 U.S.C. 1134n(a))

Subpart B—What Kinds of Projects Does the Secretary Assist Under This Program?

§ 639.10 Authorized activities.

(a) Authorized activities include the development through simulation and actual experience of skills usable in the practice of law.

(1) These skills include, but are not limited to, interviewing witnesses, factual and related investigation and analysis, counseling clients, negotiating compromises, drafting documents, advocacy before legal decision-makers, and training in professional responsibility.

(2) These skills may be taught by involving the students in any one or more of the following:

(i) Judicial, administrative, executive, or legislative proceedings;

(ii) Office or house counsel problems; or

(iii) Factual investigation, empirical research, or policy or legal analysis.

(b) The Secretary does not fund most court activities or student exercises of the type usually performed in courses on legal research and writing.

(20 U.S.C. 1134n(a): H. Rept. 96–520 at 55–56)

Subpart C—[Reserved]

Subpart D—How is a Grant Made?

§ 639.30 How does the Secretary evaluate an application?

(a) Unless other applications are of outstanding quality (those applications that score in the top 10 percent of all applications for which funds are available), the Secretary first funds applications that propose the following activities:

(1) Preparation and trial of actual cases, including administrative cases and the settlement of controversies outside the courtroom; and

(2) Service to clients who have difficulty in gaining access to legal representation.

(b) Subject to paragraph (a) of this section, the Secretary evaluates an application on the basis of the criteria in § 639.31.

(1) The Secretary awards up to 100 possible points for these criteria.

(2) The maximum possible score for each criterion is indicated in parentheses following the title.

(c) Among applications of relatively equal quality, the Secretary may give priority to applications that:

(1) Ensure a wide geographic distribution throughout the United States of law school clinical experience programs; and

(20 U.S.C. 1134(b))

(2) Ensure that a wide variety of client groups are served.

(20 U.S.C. 1134n(a); S. Rept. 96–733 at 73; H. Rept. 96–520 at 55)

§ 639.31 What selection criteria does the Secretary use?

(a) *Plan of operation.* (25 points)

(1) The Secretary reviews each application for information that shows the quality of the plan of operation for the project.

(2) The Secretary looks for information that shows—

(i) High quality in the design of the project;

(ii) An effective plan of management that ensures proper and efficient administration of the project;

(iii) A clear description of how the objectives of the project relate to the purpose of the program;

(iv) The way the applicant plans to use its resources and personnel to achieve each objective; and

(v) A clear description of how the applicant will provide equal access and treatment for eligible project participants who are members of groups that have been traditionally underrepresented, such as—

(A) Members of racial or ethnic minority groups;

(B) Women;

(C) Handicapped persons; and

(D) The elderly.

(b) *Quality of key personnel.* (15 points)

(1) The Secretary reviews each application for information that shows the quality of the key personnel the applicant plans to use on the project.

(2) The Secretary looks for information that shows—

(i) The qualifications of the project director (if one is to be used);

(ii) The qualifications of each of the other key personnel to be used in the project;

(iii) The time that each person referred to in paragraphs (b)(2) (i) and (ii) of this section plans to commit to the project; and

(iv) The extent to which the applicant, as part of its nondiscriminatory employment practices, encourages applications for employment from persons who are members of groups that have been traditionally underrepresented, such as—

(A) Members of racial or ethnic minority groups;

(B) Women;

(C) Handicapped persons; and

(D) The elderly.

(3) To determine the qualifications of a person, the Secretary considers evidence of past experience and training in fields related to the objectives of the project, as well as other information that the applicant provides.

(c) *Budget and cost effectiveness.* (5 points)

(1) The Secretary reviews each application for information that shows the project has an adequate budget and is cost effective.

(2) The Secretary looks for information that shows—

(i) The budget for the project is adequate to support the project activities; and

(ii) Costs are reasonable in relation to the objectives of the project.

(d) *Evaluation plan.* (5 points)

(1) The Secretary reviews each application for information that shows the quality of the evaluation plan for the project.

(2) The Secretary looks for information that shows methods of evaluation that are appropriate for the project and, to extent possible, are objective and produce data that are quantifiable.

(e) *Adequacy of resources.* (5 points)

(1) The Secretary reviews each application for information that shows that the applicant plans to devote adequate resources to the project.

(2) The Secretary looks for information that shows—

(i) The facilities that the applicant plans to use are adequate; and

(ii) The equipment and supplies that the applicant plans to use are adequate.

(f) *Fiscal commitment.* (15 points)

The Secretary looks for information that shows the degree to which the institution's regular budget is devoted to its clinical legal education program.

(g) *Faculty supervision.* (20 points)

The Secretary reviews each application for information that shows the extent to which the proposed project will increase the participation of law school faculty in the supervision of students under the clinical legal education program.

(h) *Academic credits.* (10 points)

The Secretary reviews each application for information that shows

that the proposed program of law school clinical experience provides for the award of academic credits to participating students.

(20 U.S.C. 1134n(a))

Subpart E—What Conditions Must a Grantee Meet?

§ 639.40 Costs.

(a) The Secretary makes available funds to cover up to 90 percent of the cost of establishing and expanding a Law School Clinical Experience Project, subject to the limitations and applicable cost principles in EDGAR. The Secretary annually may establish lower maximum Federal shares that may take into account the number of years that a grantee has been funded under this program.

(b) Federal funds for a particular law school may not exceed $100,000 in any fiscal year, no part of which may be used to pay for indirect costs or charges.

(c) Allowable costs are direct costs incurred in carrying out an approved project in accordance with the cost principles in 34 CFR Part 74, including:

(1) Planning, preparation of related teaching materials, and administration;

(2) The training of faculty members;

(3) Payment for the director of supervision and other faculty or attorneys directly involved in supervision;

(4) Appropriate travel and per diem; and

(5) Other activities directly related to the establishment or expansion of the program.

(d) Student stipends are not an allowable cost under this program.

(20 U.S.C. 1134n (b) and (c))

[FR Doc. 80-40526 Filed 12-30-80; 8:45 am]
BILLING CODE 4000-01-M

Federal Register

Wednesday
December 31, 1980

Part XI

Department of Education

Educational Opportunity Centers Program: Proposed Rulemaking

DEPARTMENT OF EDUCATION

34 CFR Part 644

Educational Opportunity Centers Program

AGENCY: Department of Education.

ACTION: Notice of Proposed Rulemaking.

SUMMARY: The Secretary proposes to amend the regulations for the Educational Opportunity Centers Program. The regulations are being amended to reflect the statutory changes contained in the Education Amendments of 1980 and to clarify the simplify the requirements governing the program.

DATES: Comments must be received on or before March 2, 1981.

Currently the Department of Education plans to hold public meetings in four cities. The tentative date for each meeting follows:

February 9, 1981, Washington, D.C.
February 11, 1981, Chicago, Illinois.
February 17, 1981, San Francisco, California.
February 19, 1981, Dallas, Texas.

ADDRESSES: Comments should be addressed to Mary Kathleen Smith, Room 3514 (ROB-3), Department of Education, 400 Maryland Avenue, SW., Washington, D.C. 20202.

The public will be advised—through a notice published in the Federal Register—of the time and specific location of each public meeting listed in the Dates section of this preamble.

FOR FURTHER INFORMATION CONTACT: Mary Kathleen Smith, Telephone No. (202) 245-2511.

SUPPLEMENTARY INFORMATION: On April 29, 1974, the Commissioner of Education published in the Federal Register final regulations for the Educational Opportunity Centers Program. The funding criteria were subsequently revised and published in final form on May 14, 1976. Those regulations, as revised, govern the grant awards made during fiscal year 1981. The Education Amendments of 1980 changed the Educational Opportunity Centers Program in several respects, and these proposed regulations reflect those changes.

The Secretary proposes to make changes in the substance and structure of the regulations for the Educational Opportunity Centers Program. The changes in substance are the result of both statutory changes and policy clarifications. The structural changes were made for reasons of clarity and consistency.

Restructuring the Regulations

In comparing these proposed regulations with those previously governing the program, the reader will notice major revisions in format. These proposed changes reflect the Secretary's concern that the regulations be easy to understand and follow. The proposed regulations for the Special Programs for Students from Disadvantaged Backgrounds, of which the Educational Opportunity Centers Program is a part, are consistent with these format changes. In restructuring the regulations, the Secretary has followed the format of the Education Department General Administrative Regulations (EDGAR).

These regulations incorporate by reference Part 75 and Part 77 of EDGAR; therefore, the regulations do not repeat certain types of information and requirements that are found in EDGAR. However, the general selection criteria found in EDGAR (34 CFR 75.202 through 75.206) have been repeated in these regulations for the convenience of the applicant (§ 644.31 (a) through (e)).

Statutory and Policy Changes

A significant change made by the Education Amendments of 1980 involves requirements for eligible participation. An Educational Opportunity Center must assure that not less than two thirds of the persons participating in the project be low-income individuals who are also first-generation or potential, first-generation college students. The remaining individuals participating in the Center need not meet this requirement but must reside in the target area or attend a target school, and need the services offered.

The Educational Amendments of 1980 define both first-generation college student and low-income individual. These definitions have been repeated in these regulations.

Another major change made by the Education Amendments of 1980 is the requirement that the Secretary, in making grants for Educational Opportunity Centers projects, consider the prior experience of service delivery under the Educational Opportunity Centers Program for each applicant. The Secretary proposes to make "prior experience" one of the selection criteria for this program. The public is invited to comment on this approach and on the weighting of that criterion, as well as that of the other selection criteria.

The Secretary intends to base the evaluation of prior experience on published performance standards. These performance standards have not yet been developed. The public is invited to submit suggestions for performance standards at this time. The Secretary will develop the performance standards at a later date, and the public will have the opportunity to comment on the specific standards when they are published as proposed rules.

A final change as a result of the amendments is the authority for Educational Opportunity Centers to provide tutoring and counseling for those individuals who are not participating in an Upward Bound or a Special Services project.

The policy changes expressed in this notice of proposed rulemaking would, for the most part, reduce existing restrictions and limitations on grantees. An Educational Opportunity Center would not be required to provide every activity and service indicated in § 644.10(a); a project would be required to provide only those services and activities needed by the participants. Grantees would also be encouraged to coordinate their efforts with other programs offered in the target area. Educational Opportunity Centers projects should supplement and complement those services and activities that are otherwise available to project participants.

The Secretary proposes to include requirements for determining whether an area qualifies as a target area. For an area to qualify, at least 20 percent of the resident families would be required to have family incomes that do not exceed the low-income family level contained in "Current Population Reports," published annually by the Bureau of the Census. The Bureau of the Census maintains information on census tracts and minor civil divisions that have 20 percent or more of the families at or below the low-income level.

Invitation to Comment

Interested persons are invited to submit comments and recommendations regarding these proposed regulations. Written comments and recommendations may be sent to the address given at the beginning of this preamble. All comments received on or before the 60th day after publication of this document will be considered in the development of the final regulations.

All comments submitted in response to these proposed regulations will be available for public inspection, during and after the comment period, in Room 3514, ROB-3, 7th and D Streets, SW., Washington, D.C., between the hours of 8:30 a.m. and 4:00 p.m., Monday through Friday of each week except Federal holidays.

Assessment of Educational Impact

The Department particularly requests comments on whether the proposed regulations in this document would require transmission of information that is already being gathered by or is available from any other agency or authority of the United States.

Citation of Legal Authority

A citation of statutory or other legal authority is placed in parentheses on the line following each substantive provision of these regulations.

(Catalog of Federal Domestic Assistance No. 84.066, Educational Opportunity Centers Program)

Dated: December 23, 1980.

Shirley M. Hufstedler,

Secretary of Education.

The Secretary proposes to revise Part 644 of Title 34 of the Code of Federal Regulations to read as follows:

PART 644—EDUCATIONAL OPPORTUNITY CENTERS PROGRAM

Subpart A—General

Sec.
644.1 The Educational Opportunity Centers Program.
644.2 Eligible grantees.
644.3 Eligible project participants: General.
644.4 Eligible project participants: Selection requirements.
644.5 Target area.
644.6 Regulations that apply to the Educational Opportunity Centers Program.
644.7 Definitions that apply to the Educational Opportunity Centers program.

Subpart B—What Kinds of Projects Does the Department of Education Assist under This Program?

644.10 Kinds of projects assisted under the Educational Opportunity Centers Program.
644.11 Project location.

Subpart C—How Does One Apply for a Grant?

644.20 How to apply for funds.

Subpart D—How Does the Secretary Make a Grant?

644.30 How the Secretary evaluates an application.
644.31 Selection criteria the Secretary uses.
644.32 Prior experience.

Subpart E—What Conditions Must Be Met by a Grantee?

644.40 Allowable costs.
644.41 Nonallowable costs.
644.42 Matching.
644.43 Performance standards. [Reserved]

Subpart F—What Are the Administrative Responsibilities of a Grantee?

644.50 Recordkeeping.

Authority: Secs. 417A and 417E of the Higher Education Act of 1965, as amended (20 U.S.C. 1070d; 1070d-1c), unless otherwise noted.

Subpart A—General

§ 644.1 The Educational Opportunity Centers Program.

The Educational Opportunity Centers Program provides Federal financial assistance to meet up to 75 percent of the cost of establishing and conducting Educational Opportunity Centers designed to provide participants with—

(a) Information concerning financial and academic assistance available for individuals desiring to pursue a program of postsecondary education; and

(b) Assistance in applying for admission to institutions of postsecondary education, including preparing applications for use by admissions and financial aid officers.

(20 U.S.C. 1070d, 1070d-1c)

§ 644.2 Eligible grantees.

The following are eligible to apply for a grant to carry out an Educational Opportunity Center:

(a) Institutions of higher education.

(b) Combinations of institutions of higher education.

(c) Public and private agencies and organizations.

(d) Secondary schools, in exceptional cases, if there are no other grantees capable of providing this program in the target areas to be served by the proposed projects.

(20 U.S.C. 1070d, 1070d-1c)

§ 644.3 Eligible project participants: General.

An individual is eligible to participate in an Educational Opportunity Center if the individual—

(a)(1) Is a citizen or national of the United States;

(2) Is a permanent resident of the United States;

(3) Provides evidence from the Immigration and Naturalization Service that he or she is in the United States, for other than a temporary purpose, with the intention of becoming a citizen or permanent resident; or

(4) Is a permanent resident of the Trust Territory of the Pacific Islands;

(b) Resides in the target area or attends a target school;

(c) Is at least 19 years old. However, if there is no Talent Search project serving the same target area as the Educational Opportunity Center, an individual may be younger than 19 and still be an eligible participant. In no case may an individual be younger than 12 years of age or have completed less than the sixth grade;

(d) Needs one or more of the services provided by the center in order to pursue a program of postsecondary education; and

(e) Expresses a desire to pursue or is pursuing a program of postsecondary education.

(20 U.S.C. 1070d, 1070d-1c)

§ 644.4 Eligible project participants: selection requirements.

(a)(1) At least two thirds of the eligible individuals an applicant proposes to serve under an Educational Opportunity Center must be low-income individuals who are also first-generation college students or potential, first-generation college students.

(2) A "low-income individual" means an individual who comes from a family whose family's taxable income did not exceed 150 percent of the poverty level in the calendar year preceding the year in which the individual participates in the project. Poverty level income is determined by using criteria of poverty established by the Bureau of the Census, U.S. Department of Commerce.

(3)(i) A "first-generation college student" or a "potential, first-generation college student" means a person neither of whose parents received a bachelor's degree.

(ii) With respect to an individual 18 years and under, only the natural or adoptive parents who are currently residing with the individual are considered the individual's parents in determining whether the individual meets the criterion of being a first-generation college student or a potential, first-generation college student.

(iii) With respect to an individual over 18, only the natural or adoptive parents who were residing with the individual before the individual's eighteenth birthday are considered the individual's parents in determining whether the individual meets the criterion of being a first-generation college student or a potential, first-generation college student.

(b) A grantee may not select an individual who is or will be served by a Talent Search project or by another Educational Opportunity Center.

(c) The grantee shall make every effort to provide that the participant population reflects the ethnic and racial diversity of the individuals eligible to be served by the project.

(20 U.S.C. 1070d, 1070d-1c)

§ 644.5 Target area.

An Educational Opportunity Center provides services to eligible participants residing in a target area or attending a target school.

(20 U.S.C. 1070d, 1070d-1c)

§ 644.6 Regulations that apply to the Educational Opportunity Centers Program.

The following regulations apply to the Educational Opportunity Centers Program:

(a) The Education Department General Administrative Regulations (EDGAR) in 34 CFR Part 75 (Direct Grant Programs) and 34 CFR Part 77 (General).

(b) The regulations in this Part 644.

(20 U.S.C. 1221e-3(a)(1))

§ 644.7 Definitions that apply to the Educational Opportunity Centers Program.

(a) *Definitions in EDGAR.* The following terms used in this part are defined in 34 CFR Part 77:

Applicant	Grantee
Application	Nonprofit
Award	Private
Budget	Project
EDGAR	Public
Equipment	Secondary school
Facilities	Secretary
Fiscal year	State
Grant	Supplies

(b) *Definitions that apply to this part.* The following definitions apply to this part:

"Act" means the Higher Education Act of 1965, as amended.

(20 U.S.C. 1001 et seq.)

"Combination of institutions of higher education" means:

(1) A group of institutions of higher education that have entered into a cooperative arrangement to carry out a common objective; or

(2) A public or nonprofit private agency, organization, or institution designated or created by a group of institutions of higher education to carry out a common objective on their behalf.

(20 U.S.C. 1141(j))

"Institution of higher education" means an educational institution as defined in Sections 1201(a) and 481 of the Higher Education Act of 1965, as amended.

(20 U.S.C. 1141(a); 1088)

"Target area" means a discrete geographic area in which at least 20 percent of the resident families have a family income that does not exceed the low-income family level contained in "Current Population Reports," Series P, Bureau of the Census, Department of Commerce.

(20 U.S.C. 1070d, 1070d-1c)

"Target school" means a secondary school that serves students residing in a target area and is or would be served by an Educational Opportunity Center.

(20 U.S.C. 1070d, 1070d-1c)

"Veteran" means a person who served on active duty in the United States Armed Forces and was discharged or released under conditions other than dishonorable.

(38 U.S.C. 101(2))

Subpart B—What Kinds of Projects Does the Department of Education Assist Under This Program?

§ 644.10 Kinds of projects assisted under the Educational Opportunity Centers Program.

(a) An Educational Opportunity Center shall, as needed by its participants—

(1) Collect and disseminate information regarding available financial and academic assistance to participants desiring to pursue a program of postsecondary education;

(2) Assist participants in preparing applications and other necessary materials—

(i) For admission to postsecondary institutions; and

(ii) For financial assistance at these institutions;

(3) Identify those eligible persons in the target area with an interest in pursuing a postsecondary education and encourage them to continue or resume their educational careers;

(4)(i) Identify and establish a relationship with those public and private programs in the target area providing counseling services and educational and career information, such as the Information Services Program (formerly the Educational Information Centers Program), that could benefit the Educational Opportunity Center participant; and

(ii) Refer participants, as needed, to these programs;

(5) Collect and disseminate information regarding the variety of postsecondary educational opportunities and career options available to participants;

(6)(i) Advise and counsel each participant regarding available student financial assistance, career options, and the appropriate postsecondary institution or institutions for that person;

(ii) However, if the grantee is an institution of higher education, it shall not use the project as part of its recruitment program;

(7) Develop and use an assessment procedure that includes the results of standardized measurement instruments or other verifiable indicators to determine each participant's interests, career goals, academic potential, and need for specific services; and

(8) Follow-up on participants who have received services or who have been referred elsewhere for services.

(b) An Educational Opportunity Center that serves veterans shall, in addition to carrying out the functions in paragraph (a) of this section—

(1) Refer veterans to high school equivalency certification programs, if necessary; and

(2)(i) Establish a relationship with the Veterans Administration, projects under the Veterans-Cost-of-Instruction Program at postsecondary institutions, State veterans agencies, and other veterans associations so that center is aware of the various benefits and services available to veterans; and

(ii) Refer veterans to these agencies and associations as appropriate.

(c) A center shall set specific objectives—stated in measurable terms—that the project should attain during each project year to meet the goals of the program.

(d) A center shall develop and use procedures to measure the impact of the program in the target area and in the target schools.

(e) A center shall engage a full-time project director. However, the Secretary may waive the full-time requirement as specified in EDGAR, 34 CFR 75.511.

(f) Each center may—

(1) Provide tutoring and counseling for project participants who are not enrolled in an Upward Bound or Special Services project that provides tutoring or counseling; and

(2) Serve as a centralized recruiting resource for institutions of higher education desiring to admit educationally disadvantaged persons. The Secretary encourages the center, in carrying out this function, to develop relationships with a variety of institutions offering postsecondary educational programs.

(20 U.S.C. 1070d, 1070d-1c)

§ 644.11 Project location.

Educational Opportunity Center services shall be provided in a setting that is accessible and approachable by the participants.

(20 U.S.C. 1070d, 1070d-1c)

Subpart C—How Does One Apply for a Grant?

§ 644.20 How to apply for funds.

To apply for a new or continuation grant, an applicant shall follow the procedures and meet the requirements contained in EDGAR, 34 CFR Part 75, Subpart C.

(20 U.S.C. 1221e-3(a)(1); 1070d, 1070d-1c)

Subpart D—How Does the Secretary Make a Grant?

§ 644.30 How the Secretary evaluates an application.

(a) The Secretary evaluates an application on the basis of the criteria in § 644.31.

(1) The Secretary awards up to 100 points for these criteria.

(2) The maximum possible score for each complete criterion is indicated in parentheses next to the heading of that criterion.

(b) For applicants that have conducted an Educational Opportunity Center project within the previous three years, the Secretary considers the prior experience of the applicant on the basis of § 644.32. The Secretary awards up to 30 additional points for prior experience.

(c) In selecting proposed projects for funding, the Secretary considers the need for the project in the area the applicant proposes to serve as compared to the need in areas other applicants propose to serve.

(20 U.S.C. 1070d, 1070d-1c)

§ 644.31 Selection criteria the Secretary uses.

The Secretary uses the following criteria—in paragraphs (a) through (h)—to evaluate applications for new awards:

(a) *Plan of operation.* (10 points)

(1) The Secretary reviews each application for information that shows the quality of the plan of operation for the project.

(2) The Secretary looks for information that shows—

(i) High quality in the design of the project;

(ii) An effective plan of management that ensures proper and efficient administration of the project;

(iii) A clear description of how the objectives of the project relate to the purpose of the program;

(iv) The way the applicant plans to use its resources and personnel to achieve each objective; and

(v) A clear description of how the applicant will provide equal access and treatment for eligible project participants who are members of groups that have been traditionally underrepresented, such as—

(A) Members of racial or ethnic minority groups;

(B) Women; and

(C) Handicapped persons.

(b) *Quality of key personnel.* (10 points)

(1) The Secretary reviews each application for information that shows the qualifications of the key personnel the applicant plans to use on the project.

(2) The Secretary looks for information that shows—

(i) The qualifications of the project director;

(ii) The qualifications of each of the other key personnel to be used in the project;

(iii) The time that each person referred to in paragraphs (b)(2) (i) and (ii) of this section plans to commit to the project; and

(iv) The extent to which the applicant, as part of its nondiscriminatory employment practices, encourages applications for employment from persons who are members of groups that have been traditionally underrepresented, such as—

(A) Members of racial or ethnic minority groups;

(B) Women;

(C) Handicapped persons; and

(D) The elderly.

(3) To determine the qualifications of a person, the Secretary considers evidence of past experience and training, in fields related to the objectives of the project, as well as other information that the applicant provides.

(c) *Budget and cost effectiveness.* (5 points)

(1) The Secretary reviews each application for information that shows that the project has an adequate budget and is cost effective.

(2) The Secretary looks for information that shows—

(i) The budget for the project is adequate to support the project activities; and

(ii) Costs are reasonable in relation to the objectives of the project.

(d) *Evaluation plan.* (10 points)

(1) The Secretary reviews each application for information that shows the quality of the evaluation plan for the project.

(2) The Secretary looks for information that shows methods of evaluation that are appropriate for the project and, to the extent possible, are objective and produce data that are quantifiable.

(e) *Adequacy of resources.* (5 points)

(1) The Secretary reviews each application for information that shows that the applicant plans to devote adequate resources to the project.

(2) The Secretary looks for information that shows—

(i) The facilities that the applicant plans to use are adequate; and

(ii) The equipment and supplies that the applicant plans to use are adequate.

(f) *Need for the center.* (25 points)

(1) The Secretary reviews each application for documented evidence that a need for an Educational Opportunity Center exists in the target area the applicant plans to serve.

(2) The Secretary looks for information that shows—

(i) The extent to which the precentage of low-income families residing in the geographically defined target area exceeds 20 percent;

(ii) The number and percentage of individuals who are eligible to be served by an Educational Opportunity Center who reside in the target area or attend target schools; and

(iii) The extent to which the target area lacks the services and activities that are provided by an Educational Opportunity Center.

(3) To determine the extent of the need for a project, the Secretary also considers—

(i) For each of the three preceding years, the estimated dropout rates for each of the target schools;

(ii) For each of the three preceding years, the estimated number and percentage of students from each target school who enrolled in postsecondary institutions;

(iii) For each of the three preceding years, the estimated number and percentage of students in each target school who are from low-income families;

(iv) The number of veterans in the target area who need Educational Opportunity Center services to pursue postsecondary education; and

(v) Other verifiable data that show the need of the adults in the target area for services that are provided by an Educational Opportunity Center.

(g) *Likelihood of success.* (20 points)

(1) The Secretary reviews each application for information that shows the likelihood of success.

(2) The Secretary looks for information that shows—

(i) The comprehensiveness of the applicant's plan for carrying out the activities under §644.10; and

(ii) The extent to which the activities are likely to result in increases in the enrollment and retention of disadvantaged persons in postsecondary institutions and increases in their graduation from postsecondary institutions.

(h) *Community participation and coordination.* (15 points)

(1) The Secretary reviews each application for information that shows that the applicant plans to use and coordinate community and other resources.

(2) The Secretary looks for information that shows—

(i) The extent to which representatives from the community, secondary schools, and postsecondary

schools have participated in the formulation of the application;

(ii) The extent to which the applicant has received and has included in the application written commitments by community organizations and other appropriate groups for the use of community and other resources to supplement authorized activities;

(iii) If applicable, the extent to which all members of a consortium will make resources available and participate in the activities of the center as defined by the work plan;

(iv) The center's defined relationship with Talent Search, Upward Bound, and Special Services for Disadvantaged Students projects in the target area and similar programs and services in the target area in terms of—

(A) Coordinating services to individuals who participate in more than one program;

(B) Providing services not otherwise available from other projects and programs; and

(C) Avoiding duplication of services; and

(v) The degree to which the center is likely to develop relationships with a variety of institutions offering postsecondary education programs to coordinate the resources and staff efforts of those institutions in admitting disadvantaged persons.

(20 U.S.C. 1221e-3(a)(1); 1070d, 1070d-1c)

§ 644.32 Prior experience.

For each applicant that has conducted an Educational Opportunity Center project within the previous three years, the Secretary—

(a) Reviews materials and documents, such as performance reports, evaluation reports, and site visit reports, for information that shows that the applicant has successfully carried out an Educational Opportunity Center project during that time;

(b) Looks for information that shows the extent of the applicant's success in meeting the performance standards listed in § 644.43; and

(c) Awards up to 30 additional points for this criterion.

(20 U.S.C. 1070d, 1070d-1c)

Subpart E—What Conditions Must Be Met by a Grantee?

§ 644.40 Allowable costs.

Allowable project costs may include the following costs reasonably related to carrying out an Educational Opportunity Center:

(a) Transportation and meal costs for participants and staff for—

(1) Approved visits to postsecondary educational institutions in the area;

(2) Participation in "College Days" activities; and

(3) Field trips to observe and meet with persons who are employed in various career fields and who can act as role models for participants.

(b) Purchase of testing materials.

(c) If approved by the Secretary, in-service training of project staff.

(d) Tutorial and counseling services if none are available to participants through an Upward Bound or a Special Services project in the target area.

(e) The rental of space if space is not available at the sponsoring institution and the space rented is not owned by the sponsoring institution.

(20 U.S.C. 1070d, 1070d-1c)

§ 644.41 Nonallowable costs.

Costs that may not be charged against a grant under this program include the following:

(a) Tuition, fees, stipends, or other forms of direct financial support for individuals participating in project activities.

(b) Application fees for enrollment or financial aid.

(c) Lodging for project participants.

(d) Duplication of services that are available to participants through—

(1) State, local, or private sources;

(2) The institution or agency sponsoring the project; or

(3) Other Federal programs.

(e) Research not directly related to the evaluation or improvement of the project.

(f) The purchase of major equipment, unless the grantee demonstrates to the Secretary's satisfaction that purchase is less expensive than renting.

(g) The construction, renovation, or remodeling of any facilities.

(20 U.S.C. 1070d, 1070d-1c)

§ 644.42 Matching.

(a) The Secretary pays up to 75 percent of the costs reasonably related to the establishment and operation of an Educational Opportunity Center.

(b) A grantee shall provide at least 25 percent of the costs related to the establishment and operation of an Educational Opportunity Center.

(c) The grantee's share may be derived from cash or in-kind contributions.

(d) In order to be considered as part or all of the grantee's share, in-kind contributions must be activities or services that qualify as allowable costs.

(20 U.S.C. 1070d, 1070d-1c)

§ 644.43 Performance standards. [Reserved]

[The Secretary will publish, as a separate notice of proposed rulemaking, proposed performance standards.]

Subpart F—What Are the Administrative Responsibilities of a Grantee?

§ 644.50 Recordkeeping.

(a) Each grantee shall keep records on the services provided to individuals and groups.

(b) For each participant who receives project services through personal contact on more than two occasions, the grantee shall keep the following on file:

(1) The participant's name, age, sex, ethnic and racial background, telephone number, and permanent address.

(2) The information used to select the participant, including—

(i) Documentation of the participant's eligibility to receive services; and

(ii) Copies of the participant's high school transcripts and test scores such as aptitude and achievement scores and interest inventories.

(3) Documentation of services received by the participant, including—

(i) Counseling services;

(ii) Tutorial services;

(iii) Visits made to postsecondary institutions;

(iv) Assistance in applying for admission to postsecondary institutions; and

(v) Assistance in applying for student financial aid.

(4) Documentation of follow-up of the participant, including, if appropriate—

(i) The names of the postsecondary institutions that accepted the participant for admission, and the one in which the participant enrolled;

(ii) The amount and type of student financial aid received by the participant; and

(iii) The services the participant received when referred by the Center to other programs.

(c) For each participant who receives project services through personal contact on one or two occasions, the grantee shall keep records that include the participant's——

(1) Name;

(2) Telephone number;

(3) Address;

(4) Age;

(5) Sex;

(6) Ethnic and racial background; and

(7) Service(s) received.

(d) For those services that are not provided exclusively to individual participants, the grantee shall maintain records that include—

(1) The types and kinds of group services provided;

(2) The number of participants;

(3) The time and place the services were provided; and

(4) Documentation of outreach activities.

(20 U.S.C. 1070d, 1070d-1c)

[FR Doc. 80-40533 Filed 12-30-80; 8:45 am]

BILLING CODE 4000-01-M

Federal Register

Wednesday
December 31, 1980

Part XII

Department of Education

Special Services for Disadvantaged Students Program

DEPARTMENT OF EDUCATION

34 CFR Part 646

Special Services for Disadvantaged Students Program

AGENCY: Department of Education.

ACTION: Notice of proposed rulemaking.

SUMMARY: The Secretary proposes to amend the regulations for the Special Services Program. The regulations are being amended to reflect the statutory changes contained in the Education Amendments of 1980 and to clarify and simplify the requirements governing the program.

DATES: Comments must be received on or before March 2, 1981.

Currently the Department of Education plans to hold public meetings in four cities. The tentative date for each meeting follows:

February 9, 1981, Washington, D.C.

February 11, 1981, Chicago, Illinois.

February 17, 1981, San Francisco, California.

February 19, 1981, Dallas, Texas

ADDRESSES: Comments should be addressed to Mary Kathleen Smith, Room 3514 (ROB-3), Department of Education, 400 Maryland Avenue, SW., Washington, D.C. 20202.

The public will be advised—through a notice published in the Federal Register—of the time and specific location of each public meeting listed in the Dates section of this preamble.

FOR FURTHER INFORMATION CONTACT: Mary Kathleen Smith, Telephone No. (202) 245-2511.

SUPPLEMENTARY INFORMATION: On May 24, 1977, the Commissioner of Education published in the Federal Register the final regulations for the Special Services Program. Those regulations govern the grant awards made during fiscal year 1981. The Education Amendments of 1980 changed the Special Services Program in several respects and these proposed regulations reflect those changes.

The Secretary proposes to make changes in the substance and structure of the regulations for the Special Services Programs. The changes in substance are the result of both statutory changes and policy clarifications. The structural changes were made for reasons of clarity and consistency.

Restructuring the Regulations

In comparing these proposed regulations with those previously governing the program, the reader will notice major revisions in format. These proposed changes reflect the Secretary's concern that the format of the regulations be easy to understand and follow. The proposed regulations for the Special Programs for Students from Disadvantaged Backgounds, of which the Special Services Program is a part, are made consistent with these format changes. In restructuring the regulations, the Secretary has followed the format of the Education Department General Administrative Regulations (EDGAR).

These regulations incorporate by reference Part 75 and Part 77 of EDGAR; therefore, the regulations do not repeat certain types of information and requirements that are found in EDGAR. However, the general selection criteria found in EDGAR (34 CFR Part 75.202 through 75.206) have been repeated in these regulations for the convenience of the applicant (section 646.31 (a) through (e)).

Statutory and Policy Changes

A significant change made by the Education Amendments of 1980 involves the requirement for eligible participation. Special Services grantees must assure that not less than two thirds of the persons participating in the project be physically handicapped, or be low-income individuals who are first-generation college students. The remaining students participating in the project must be either low-income individuals, first-generation college students, or physically handicapped students.

The Education Amendments of 1980 define both first-generation college student and low-income individual. These definitions have been repeated in these regulations.

Another significant change made by the Education Amendments of 1980 is the assurance that the Special Services project will receive sufficient financial assistance to meet the student's full financial need.

A final major change as a result of the new amendments is the requirement that the Secretary, in making grants for Special Services projects, consider the prior experience of service delivery under the Special Services Program for each applicant. The Secretary proposes to make "prior experience" one of the selection criteria for this program. The public is invited to comment on this approach and on the weighting of that criterion, as well as that of the other selection criteria.

The Secretary intends to base the evaluation of prior experience on published performance standards. These performance standards have not yet been developed. The public is invited to submit suggestions for performance standards at this time. The Secretary will develop the performance standards at a later date and the public will have the opportunity to comment on the specific standards when they are published as proposed regulations.

The policy changes expressed in this notice of proposed rulemaking for the most part reduce existing restrictions and limitations on grantees. Proposed section 646.10, paragraphs (c) and (e), would encourage the coordination of Special Services activities with those of similar programs on campus and in the area. A Special Services project would not be required to provide every listed activity and service. A project would only be required to provide those services needed by the participants if those services are not otherwise available at the institution. The Special Services grantee would be encouraged to use its project to supplement and complement those services and activities currently available to participants through other sources.

Proposed § 646.10(f)(2) would continue to require grantee institutions to retain project participants for a period of time sufficient to enable them to adjust to and participate meaningfully in the academic program at the institution. The requirements of a minimum of two years in a four-year program and one year in a two-year program would be removed. Instead, the project director and the administration of the institution would be required to decide on a case-by-case basis the period of time sufficient for an individual participant to be retained.

The Secretary proposes to revise § 646.40, *Allowable Costs*, paragraph (a). Projects would no longer be allowed to charge to the grant the total cost of providing the remedial and special classes that are limited to project participants and that do not duplicate identical instruction at the institution. The costs of these classes may be shared between the institution and the project. The Secretary believes that the tuition fees paid by the project participants as enrolled students at the institution already defray part of the costs of any special or remedial classes the participants might require.

Invitation To Comment

Interested persons ar invited to submit comments and recommendations regarding these proposed regulations. Written comments and recommendations may be sent to the address given at the beginning of this preamble. All comments received on or before March 2, 1981 will be considered in the development of the final regulations.

All comments submitted in response to these proposed regulations will be available for public inspection, during and after the comment period, in Room 3514, ROB-3, 7th and D Streets, SW., Washington, D.C., between the hours of 8:30 a.m. and 4:00 p.m., Monday through Friday of each week except Federal holidays.

Assessment of Educational Impact

The Department particularly requests comments on whether the proposed regulations in this document would require transmission of information that is already being gathered by or is available from any other agency or authority of the United States.

Citation of Legal Authority

A citation of statutory or other legal authority is placed in parentheses on the line following each substantive provision of these regulations.

(Catalog of Federal Domestic Assistance No. 84.042, Special Services for Disadvantaged Students)

Dated: December 23, 1980.

Shirley M. Hufstedler,

Secretary of Education.

The Secretary proposes to revise Part 646 of Title 34 of the Code of Federal Regulations to read as follows:

PART 646—SPECIAL SERVICES FOR DISADVANTAGED STUDENTS PROGRAM

Subpart A—General

Sec.

646.1 The Special Services for Disadvantaged Students Program.
646.2 Eligible grantees.
646.3 Eligible project participants: general.
646.4 Eligible project participants: selection requirements.
646.5 Regulations that apply to the Special Services Program.
646.6 Definitions that apply to the Special Services Program.

Subpart B—What Kinds of Projects Does the Department of Education Assist Under This Program?

646.10 Kinds of projects assisted under the Special Services Program.
646.11 Educational component for students with limited proficiency in English.

Subpart C—How Does One Apply for a Grant?

646.20 How to apply for funds.

Subpart D—How does the Secretary Make a Grant?

646.30 How the Secretary evaluates an application.
646.31 Selection criteria the Secretary uses.
646.32 Prior experience.

Subpart E—What Conditions Must Be Met by a Grantee?

646.40 Allowable costs.
646.41 Nonallowable costs.
646.42 Performance standards. [Reserved]

Subpart F—What Are the Administrative Responsibilities of a Grantee?

646.50 Recordkeeping.

Authority: Secs. 417A and 417D of the Higher Education Act of 1965, as amended (20 U.S.C. 1070d; 1070d-1b), unless otherwise noted.

Subpart A—General

§ 646.1 The Special Services for Disadvantaged Students Program.

The Special Services for Disadvantaged Students Program—referred to in these regulations as the Special Services Program—provides Federal financial assistance for projects designed to increase the retention and graduation rates of qualified post-secondary students and, as appropriate, facilitate their entrance into graduate and professional programs.

(20 U.S.C. 1070d, 1070d-1b)

§ 646.2 Eligible grantees.

The following are eligible to apply for a grant to carry out a Special Services project:

(a) Institutions of higher education.

(b) Combinations of institutions of higher education.

(20 U.S.C. 1070d, 1070d-1b)

§ 646.3 Eligible project participants: general.

An individual is eligible to participate in a Special Services project if the individual—

(a)(1) Is a citizen or national of the United States;

(2) Is a permanent resident of the United States;

(3) Provides evidence from the Immigration and Naturalization Service that he or she is in the United States for other than a temporary purpose with the intention of becoming a citizen or permanent resident; or

(4) Is a permanent resident of the Trust Territory of the Pacific Islands;

(b) Is enrolled or accepted for enrollment for the next session, excluding the summer session, at the grantee institution;

(c) Has a need for academic support in order to successfully pursue a postsecondary education program; and

(d)(1) Is a low-income individual;

(2) Is a first-generation college student; or

(3) Is physically handicapped.

(20 U.S.C. 1070d, 1070d-1b)

§ 646.4 Eligible project participants: Selection requirements.

(a)(1) At least two-thirds of the eligible individuals an applicant proposes to serve under a Special Services project must be—

(i) Physically handicapped; or

(ii) Low-income individuals who are first-generation college students.

(2) The remaining individuals the applicant proposes to serve under the Special Services project must be—

(i) Physically handicapped;

(ii) Low-income individuals; or

(iii) First-generation college students.

(3) A "low-income individual" means an individual who comes from a family whose family's taxable income did not exceed 150 percent of the poverty level in the calendar year preceding the year in which the individual participates in the project. Poverty level income is determined by using criteria of poverty established by the Bureau of the Census, U.S. Department of Commerce.

(4)(i) A "first-generation college student" means a person neither of whose parents received a bachelor's degree.

(ii) With respect to individuals 18 years of age and under, only the natural or adoptive parents who are currently residing with the individual are considered the individual's parents in determining whether the individual meets the criterion of being a first-generation college student.

(iii) With respect to individuals over 18, only the natural or adoptive parents who were residing with the individual before the individual's eighteenth birthday are considered the individual's parents in determining whether the individual meets the criterion of being a first-generation college student.

(5)(i) "Physically handicapped," with reference to an individual, means a person who, because of a physical disability, needs specifically designed instructional materials or programs, modified physical facilities, or related services in order to participate fully in the experience and opportunities offered by postsecondary institutions.

(ii) Physical disability includes, but is not limited to, the following:

(A) Legal blindness.

(B) Deafness.

(C) Cerebral palsy.

(D) Epilepsy.

(E) Mobility or manipulative difficulties due to use of appliances or prosthesis.

(F) Quadriplegia or paraplegia.

(G) Serve arthritis or other crippling diseases.

(H) Severe heart condition.

(I) Multiple disabilities.

(b) The grantee shall make every effort to provide that the participant population reflects the ethnic and racial diversity of the individuals eligible to be served by the project.

(20 U.S.C. 1070d, 1070d-1b)

§ 646.5 Regulations that apply to the Special Services Program.

The following regulations apply to the Special Services Program:

(a) The Education Department General Administrative Regulations (EDGAR) in 34 CFR Part 75 (Direct Grant Programs) and 34 CFR Part 77 (Definitions).

(b) The regulations in this Part 646.

(20 U.S.C. 1221e-3(a)(1))

§ 646.6 Definitions that apply to the Special Services Program.

(a) *Definitions in EDGAR.* The following terms used in this part are defined in 34 CFR Part 77:

Applicant; Application; Award; Budget; EDGAR; Equipment; Facilities; Fiscal year; Grant; Grantee; Nonprofit; Private; Project; Public; Secretary; State; Supplies.

(b) *Definitions that apply to this part.* The following definitions apply to this part:

"Act" means the Higher Education Act of 1965, as amended.

(20 U.S.C. 1001 et seq.)

"Combination of institutions of higher education" means:

(1) A group of institutions of higher education that have entered into a cooperative arrangement to carry out a common objective; or

(2) A public or nonprofit private agency, organization, or institution designated or created by a group of institutions of higher education to carry out a common objective on their behalf.

(20 U.S.C. 1141(j))

"Institution of higher education" means an educational institution as defined in Sections 1201(a) and 481 of the Higher Education Act of 1965, as amended.

(20 U.S.C. 1141(a); 1088)

"Limited proficiency in English," with reference to an individual, means an individual—

(1)(i) Who was not born in the United States or whose native language is other than English;

(ii) Who comes from a home in which a language other than English is most relied upon for communication; or

(iii) Who is an American Indian or Alaskan Native student and comes from an environment in which a language other than English has had a significant impact on his or her level of English language proficiency; and

(2) Who, as a result of the circumstances described in paragraph (1) of this definition, has sufficient difficulty in understanding, speaking, reading, or writing the English language to deny him or her the opportunity to learn successfully in classrooms in which the language of instruction is English.

(20 U.S.C. 3223(a)(1))

Subpart B—What Kinds of Projects Does the Department of Education Assist Under This Program?

§ 646.10 Kinds of projects assisted under the Special Services Program.

(a) A Special Services project shall, as needed by the participants—

(1) Develop and use procedures to identify individuals who are eligible to participate;

(2) Develop and use procedures to select participants from among eligible individuals;

(3) Determine for each participant academic and other educational deficiencies that must be corrected to enable that individual to graduate;

(4) Develop for each participant an individualized plan of program support to improve the participant's skills;

(5) Provide instruction in reading, writing study skills, mathematics, and other subjects necessary for that individual's success beyond high school;

(6) Provide personal counseling;

(7) Provide academic advice and assistance in course selection;

(8) Provide career counseling and activities designed to acquaint participants with the range of career options available to them;

(9) Provide tutoring;

(10) Assist participants to secure admission to and financial assistance for enrollment in graduate and professional programs; and

(11) Document the effects of project activities on a student's performance and progress while he or she is participating in the project:

(b) A Special Services project may—

(1) Provide exposure to academic programs and cultural events not usually available to disadvantaged students; and

(2) Refer participants, on an individual basis, to health, employment, housing and legal agencies and other resources to resolve noneducational problems related to academic success.

(c) The Special Services project shall provide the activities and services in paragraph (a) of this section through the project, the institution, or other programs.

(d) The Special Services project shall set specific objectives—stated in measurable terms—that the project should attain during each project year to meet the goals of the program.

(e) If coordination is cost effective and improves the provision of services to participants, the Special Services project shall coordinate with—

(1) Talent Search, Upward Bound, and other Special Services projects, and Educational Opportunity Centers operating in close geographic proximity; and

(2) Federal, State, and local projects that are similar to the Special Services project and are located on the same campus as the Special Services project.

(f) Each institution receiving a Special Services grant shall provide—

(1) Assure that each participant enrolled in the project will receive sufficient financial assistance to meet the student's full financial need;

(2) Assure that project participants will be retained at the institution for a period of time sufficient to enable them to adjust to and participate successfully in the academic program at the institution;

(3) Assure that all resources and facilities that are available to other students of the institution will be available to project participants;

(4) Locate the project in an area that is accessible to participants, especially handicapped participants;

(5) Engage a full-time project director. However, the Secretary may waive the full-time requirement as specified in EDGAR, 34 CFR 75.511;

(6) Use the facilities and, if possible, the staff of the institution to provide preservice and in-service training for the project staff;

(7) Inform the institutional community of the goals of its Special Services project; and

(8) Assure that the project does not duplicate services regularly available to participants through State, local, or private funding sources.

(20 U.S.C. 1070d, 1070d-1b)

§ 646.11 Educational component for students with limited proficiency in English.

(a) A Special Services project may have a component to serve students with limited proficiency in English.

(b) A project with that component shall—

(1) Provide special instruction in the English language either through the project or the institution's regular program of instruction;

(2) Provide programs, services, and activities—as described in § 646.10(a)(1) through (11)—that are specifically

designed for students of limited proficiency in English; and

(3) If the project cannot serve all students eligible for the component, select for participation students who have the greatest difficulty understanding, speaking, reading, and writing English.

(20 U.S.C. 1070d, 1070d-1b)

Subpart C—How Does One Apply for a Grant?

§ 646.20 How to apply for funds.

To apply for a new or a continuation grant, an applicant shall follow the procedures and meet the requirements contained in EDGAR, 34 CFR Part 75, Subpart C.

(20 U.S.C. 1221e-3(a)(1); 1070d, 1070d-1b)

Subpart D—How Does the Secretary Make a Grant?

§ 646.30 How the Secretary evaluates an application.

(a) The Secretary evaluates an application on the basis of the criteria in § 646.31.

(1) The Secretary awards up to 100 points for these criteria.

(2) The maximum possible score for each complete criterion is indicated in parentheses next to the heading of that criterion.

(b) For applicants that have conducted a Special Services project within the previous three years, the Secretary considers the prior experience of the applicant on the basis of § 646.32. The Secretary awards up to 30 additional points for prior experience.

(c) In selecting proposed projects for funding, the Secretary considers the need for the project in the institution the applicant proposes to serve as compared to the need in institutions other applicants propose to serve.

(20 U.S.C. 1070d, 1070d-1b)

§ 646.31 Selection criteria the Secretary uses.

The Secretary uses the following criteria—in paragraphs (a) through (h)—to evaluate applications for new awards:

(a) *Plan of operation.* (10 points)

(1) The Secretary reviews each application for information that shows the quality of the plan of operation for the project.

(2) The Secretary looks for information that shows—

(i) High quality in the design of the project;

(ii) An effective plan of management that ensures proper and efficient administration of the project;

(iii) A clear description of how the objectives of the project relate to the purpose of the program;

(iv) The way the applicant plans to use its resources and personnel to achieve each objective; and

(v) A clear description of how the applicant will provide equal access and treatment for eligible project partcipants who are members of grfoups that have been traditionally underrepresented, such as—

(A) Members of racial or ethnic minority groups;

(B) Women; and

(C) Handicapped persons.

(b) *Quality of key personnel.* (10 points)

(1) The Secretary reviews each application for information that shows the qualifications of the key personnel the applicant plans to use on the project.

(2) The Secretary looks for information that shows—

(i) The qualifications of the project director;

(ii) The qualifications of each of the other key personnel to be used in the project;

(iii) The time that each person referred to in paragraphs (b)(2) (i) and (ii) of this section plans to commit to the project; and

(iv) The extent to which the applicant, as part of its nondiscriminatory employment practices, encourages, applications for employment from persons who are members of groups that have been traditionally underrepresented, such as—

(A) Members of racial or ethnic minority groups;

(B) Women;

(C) Handicapped persons; and

(D) The elderly.

(3) To determine the qualifications of a person, the Secretary considers evidence of past experience and training, in fields related to the objectives of the project, as well as other information that the applicant provides.

(c) *Budget and cost effectiveness.* (5 points)

(1) The Secretary reviews each application for information that shows that the project has an adequate budget and is cost effective.

(2) The Secretary looks for information that shows—

(i) The budget for the project is adequate to support the project activities; and

(ii) Costs are reasonable in relation to the objectives of the project.

(d) *Evaluation plan.* (10 points)

(1) The Secretary reviews each application for information that shows the quality of the evaluation plan for the project.

(2) The Secretary looks for information that shows methods of evaluation that are appropriate for the project and, to the extent possible, are objective and produce data that are quantifiable.

(e) *Adequacy of resources.* (5 points)

(1) The Secretary reviews each application for information that shows that the applicant plans to devote adequate resources to the project.

(2) The Secretary looks for information that shows—

(i) The facilities that the applicant plans to use are adequate; and

(ii) The equipment and supplies that the applicant plans to use are adequate.

(f) *Need for the project at the applicant institution.* (25 points)

(1) The Secretary reviews each application for information that shows that a need for a Special Services project exists at the institution(s) applying for a grant.

(2) The Secretary looks for information that shows—

(i) The number and percentage of students enrolled or accepted for enrollment at the institution who meet the eligibility requirements of § 646.3;

(ii) The academic and other problems that eligible students encounter at the time of entry into the institution; and

(iii) The academic and other problems that eligible students encounter while pursuing their education at the institution.

(3) To determine the extent of the need for a project, the Secretary compares factors with regard to students who would have been eligible for Special Services and those who would not have been eligible. The comparisons may include such factors as—

(i) The attrition rates;

(ii) The average length of stay for incoming freshmen;

(iii) The number and percentage having grade point averages equivalent to A, B, C, D, and F; and

(iv) The number and percentage of graduating students who enrolled in graduate and professional programs.

(g) *Project design.* (20 points)

(1) The Secretary reviews each application for information that shows the quality of the project's design.

(2) The Secretary looks for information that shows the comprehensiveness of the applicant's plan for—

(i) Identifying students eligible to be served by the project and selecting participants from those eligible to be served;

(ii) Conducting an assessment of supportive services needed by each participant;

(iii)(A) Providing—through the project, the institution, or other sources—the services and activities listed in § 646.10, and, if a component for students of limited proficiency in English is proposed, the services and activities in § 646.11;

(B) To determine the comprehensiveness and adequacy of these services and activities, the Secretary considers, in addition to other information that the applicant provides, the sources and levels of support for each activity and service to be provided; and

(iv) Using institutional resources, including the time of institutional faculty and staff made available to the project.

(h) *Institutional commitment.* (15 points)

(1) The Secretary reviews each application for information that shows the commitment of the applicant to the Special Services project.

(2) The Secretary looks for information that shows—

(i) The degree to which the administrative and academic policies, grading systems, retention policies, and probation procedures indicate institutional commitment to the participant's chances for graduating from the institution;

(ii) The extent to which the institution has made available in the previous three years, educational opportunities for low-income students, first-generation college students, and physically handicapped students. The Secretary considers efforts of the institution to retain these students and to improve their chances for graduating from the institution;

(iii) The extent to which the project director will contribute to the administrative and academic policies that affect the partcipant's chances of completing an educational program at the institution;

(iv) The extent to which the applicant proposes to inform the institutional community of the goals and objectives of the Special Services project; and

(v) The extent to which the applicant will make available to the project institutional resources, including the commitment of time from institutional faculty and staff.

(20 U.S.C. 13221e-3(a)(1); 1070d, 1070d-1b)

§ 646.32 Prior experience.

For each applicant that has conducted a Special Services project within the previous three years, the Secretary—

(a) Reviews materials and documents, such as performance reports, evaluation reports, and site visit reports, for information that shows that the applicant has successfully carried out a Special Services project during that time;

(b) Looks for information that shows the extent of the applicant's success in meeting the performance standards listed in § 646.43; and

(c) Awards up to 30 additional points for this criterion.

(20 U.S.C. 1070d, 1070d-1d)

Subpart E—What Conditions Must Be Met by a Grantee?

§ 646.40 Allowable costs.

Allowable project costs may include the following costs reasonably related to carrying out a Special Services project:

(a) A portion of the cost of existing faculty and staff at the institution to conduct remedial and special classes if these classes are limited to project participants and the institution does not provide identical instruction as part of its program of instruction or through another Federal program or a State, local, or privately funded program.

(b) Courses in English language instruction for students of limited proficiency in English if these classes are limited to project participants and if these classes are not otherwise available.

(c) In-service training of project staff is approved by the Secretary.

(d) Activities of an academic or cultural nature, such as trips to museums, laboratories, and work sites, that have as their purpose the improvement of the participant's academic progress and personal dvelopment at the institution.

(e) Transporation of participants to and from educational and cultural activities sponsored by the project and approved in writing by the Secretary.

(f) The rental of space if space is not available at the sponsoring institution and the space rented is not owned by the sponsoring institution.

(20 U.S.C. 1070d, 1070d-1b)

§ 646.41 Nonallowable costs.

Costs that may not be charged against a grant under this program include the following:

(a) The costs involved in the recruiting of students for enrollment at the institution.

(b) The purchase of major equipment, unless the grantee demonstrates to the Secretary's satisfaction that purchase is required to meet the purposes of the project and is less expensive than renting.

(c) The payment of tuition, stipends, or any other form of student financial support to staff or participants.

(d) Research not directly related to the evaluation or improvement of the project.

(e) The construction, renovation, or remodeling of any facilities.

(20 U.S.C. 1070d, 1070d-1b)

§ 646.42 Performance standards. [Reserved]

[The Secretary will publish, as a separate notice of proposed rulemaking, proposed performance standards.]

Subpart F—What Are the Administrative Responsibilities of a Grantee?

§ 646.50 Recordkeeping.

(a) A grantee shall keep records on the services provided to each participant, including—

(1) Counseling activities, such as family contacts, career explorations, referrals, and assistance in course selection;

(2) Contacts with the participant, the the services provided, the measurements of progress, and reports that relate to the academic and other types of assistance provided the student; and

(3) If applicable, assistance provided the participant to secure admission and financial assistance for enrollment in graduate and professional programs.

(b) To doument the progress of each participant, the grantee shall keep the following on file;

(1) The name, age, sex, and ethnic and racial background of the participant.

(2) Documentation of the participant's eligibility to receive services.

(3) The rationale, used to select the participant, including records of interviews.

(4) A summary at the end of each academic term of—

(i) Credit hours attempted by the participant;

(ii) Credit hours earned;

(iii) Credit hours earned toward graduation;

(iv) Grade point average;

(v) Cumulative average;

(vi) Courses dropped, if any, and the reasons for dropping them;

(vii) Remedial courses taken; and

(viii) Noncredit hours taken.

(5) Documentation that the participant received sufficient financial assistance to meet his or her full financial need.

(6) Documentation of follow-up on each participant, including—

(i) The date of graduation and degree awarded; and

(ii) If applicable, the names of postsecondary institutions that accepted the participant in graduate or professional programs and the one in which the participant enrolled.

(7) The date and nature of the participant's last contact with the project, including, if available—

(i) The reason for the participant's leaving the project;

(ii) The participant's permanent mailing address and telephone number; and

(iii) Any recommendations made to the participant regarding the participants educational and career potentials.

(20 U.S.C. 1070d, 1070d-1b)

[FR Doc. 80-40534 Filed 12-30-80; 8:45 am]
BILLING CODE 4000-01-M

Federal Register

Wednesday
December 31, 1980

Part XIII

Department of Education

Talent Search Program

DEPARTMENT OF EDUCATION

34 CFR Part 643

Talent Search Program

AGENCY: Department of Education.

ACTION: Notice of proposed rulemaking.

SUMMARY: The Secretary proposes to amend the regulations for the Talent Search Program. The regulations are being amended to reflect the statutory changes contained in the Education Amendments of 1980 and to clarify and simplify the requirements governing the program.

DATES: Comments must be received on or before March 2, 1981.

Currently the Department of Education plans to hold public meetings in four cities. The tentative date for each meeting follows:

February 9, 1981, Washington, D.C.;
February 11, 1981, Chicago, Illinois;
February 17, 1981, San Francisco, California;
February 19, 1981, Dallas, Texas.

ADDRESSES: Comments should be addressed to Mary Kathleen Smith, Room 3514 (ROB-3), Department of Education, 400 Maryland Avenue, SW., Washington, D.C. 20202.

The public will be advised—through a notice published in the Federal Register—of the time and specific location of each public meeting listed in the Dates section of this preamble.

FOR FURTHER INFORMATION CONTACT: Mary Kathleen Smith, Telephone No. (202) 245-2511.

SUPPLEMENTARY INFORMATION:

On May 24, 1977, the Commissioner of Education published in the Federal Register final regulations for Talent Search Program. Those regulations govern the grant awards made during fiscal year 1981. The Education Amendments of 1980 changed the Talent Search Program in several respects, and these proposed regulations reflect those changes.

The Secretary proposes to make changes in the substance and structure of the regulations for the Talent Search Program. The changes in substance are the result of both statutory changes and policy clarifications. The structural changes were made for reasons of clarity and consistency.

Restructuring the Regulations

In comparing these proposed regulations with those previously governing the program, the reader will notice major revisions in format. These proposed changes reflect the Secretary's concern that the format of the regulations be easy to understand and follow. The proposed regulations for the Special Programs for Students from Disadvantaged Backgrounds, of which the Talent Search Program is a part, are made consistent with these format changes. In restructuring the regulations, the Secretary has followed the format of the Education Department General Administrative Regulations (EDGAR).

These regulations incorporate by reference Part 75 and Part 77 of EDGAR; therefore, the regulations do not repeat certain types of information and requirements that are found in EDGAR. However, the general selection criteria found in EDGAR (34 CFR 75.202 through 75.206) have been repeated in these regulations for the convenience of the applicant (§ 643.31 (a) through (e)).

Statutory and Policy Changes

A significant change made by the Education Amendments of 1980 involves the requirements for eligible participation. Talent Search grantees must assure that not less than two thirds of the persons participating in the project be low-income individuals who are also potential, first-generation college students. The remaining individuals participating in the project need not meet this requirement, but must reside in the target area or attend a target school, and need the services offered.

The Education Amendments of 1980 define both first-generation college student and low-income individual. These definitions have been repeated in these regulations.

Another major change made by the Education Amendments of 1980 is the requirement that the Secretary, in making grants for Talent Search projects, shall consider the prior experience of service delivery under the Talent Search Program for each applicant. The Secretary proposes to make "prior experience" one of the selection criteria for this program. The public is invited to comment on this approach and on the weighting of that criterion, as well as that of the other selection criteria.

The Secretary intends to base the evaluation of prior experience on published performance standards. These performance standards have not yet been developed. The public is invited to submit suggestions for performance standards at this time. The Secretary will develop the performance standards at a later date, and the public will have the opportunity to comment on the specific standards when they are published as proposed rules.

A final change as a result of the amendments is the authority for Talent Search projects to provide tutoring to enable participants to undertake postsecondary educational programs or to re-enter them. A Talent Search project may provide tutoring only to those individuals who are not participating in an Upward Bound or a Special Services project.

The policy changes expressed in this notice of proposed rulemaking would, for the most part, reduce existing restrictions and limitations on grantees. A Talent Search project would not be required to provide every activity and service indicated in the proposed § 643.10(a); a project would be required to provide only those services and activities needed by the participants. Grantees would also be encouraged to coordinate their efforts with other programs offered in the target area. Talent Search projects should supplement and complement those services and activities that are otherwise available to project participants.

The Secretary proposes to remove the requirement that a Talent Search project serve a minimum of 1,000 individuals, or 500 individuals if the area is sparsely populated or geographically isolated. Each applicant would propose the number it could adequately serve with the budget it proposes.

Finally, the Secretary proposes to revise the requirements for determining whether an area qualifies as a target area. For an area to qualify, at least 20 percent of its resident families would be required to have family incomes that do not exceed the low-income family level contained in "Current Population Reports" published annually by the Bureau of the Census. The Bureau of the Census maintains information on census tracts and minor civil divisions that have 20 percent or more of the families at or below the low-income level.

Invitation to Comment

Interested persons are invited to submit comments and recommendations regarding these proposed regulations. Written comments and recommendations may be sent to the address given at the beginning of this preamble. All comments received on or before the 60th day after publication of this document will be considered in the development of the final regulations.

All comments submitted in response to these proposed regulations will be available for public inspection, during and after the comment period, in Room 3514, ROB-3, 7th and D Streets, SW., Washington, D.C., between the hours of 8:30 a.m. and 4:00 p.m., Monday through Friday of each week except Federal holidays.

Assessment of Educational Impact

The Department particularly requests comments on whether the proposed regulations in this document would require transmission of information that is already being gathered by or is available from any other agency or authority of the United States.

Citation of Legal Authority:

A citation of statutory or other legal authority is placed in parentheses on the line following each substantive provision of these regulations.

(Catalog of Federal Domestic Assistance No. 84.044, Talent Search Program)

Dated: December 23, 1980.

Shirley M. Hufstedler,

Secretary of Education.

The Secretary proposes to revise Part 643 of Title 34 of the Code of Federal Regulations to read as follows:

PART 643—TALENT SEARCH PROGRAM

Subpart A—General

Sec.
643.1 The Talent Search Program.
643.2 Eligible grantees.
643.3 Eligible project participants: general.
643.4 Eligible project participants: selection requirements.
643.5 Target area.
643.6 Regulations that apply to the Talent Search Program.
643.7 Definitions that apply to the Talent Search Program.

Subpart B—What Kinds of Projects Does the Department of Education Assist under This Program?

643.10 Kinds of projects assisted under the Talent Search Program.
643.11 Project location.

Subpart C—How Does One Apply for a Grant?

643.20 How to apply for funds.

Subpart D—How Does the Secretary Make a Grant?

643.30 How the Secretary evaluates an application.
643.31 Selection criteria the Secretary uses.
643.32 Prior experience.

Subpart E—What conditions Must Be Met by a Grantee?

643.40 Allowable costs.
643.41 Nonallowable costs.
643.42 Performance standards. [Reserved]

Subpart F—What Are the Administrative Responsibilities of a Grantee?

643.50 Recordkeeping.

Authority: Secs. 417A and 417B of the Higher Education Act of 1965, as amended (20 U.S.C. 1070d, 1070d-1), unless otherwise noted.

Subpart A—General

§ 643.1 The Talent Search Program.

The Talent Search Program provides Federal financial assistance to projects designed to enable participants to continue in and graduate from secondary schools and to enroll—with adequate financial aid and supportive services, if needed—in postsecondary educational programs.

(20 U.S.C. 1070d, 1070d-1)

§ 643.2 Eligible grantees.

The following are eligible to apply for a grant to carry out a Talent Search project:

(a) Institutions of higher education.

(b) Combinations of institutions of higher education.

(c) Public and private agencies and organizations.

(d) Secondary schools, in exceptional cases, if there are no other grantees capable of providing this program in the target areas to be served by the proposed projects.

(20 U.S.C. 1070d, 1070d-1)

§ 643.3 Eligible project participants: general.

(a) An individual is eligible to participate in a Talent Search project if the individual—

(1)(i) Is a citizen or national of the United States;

(ii) Is a permanent resident of the United States;

(iii) Provides evidence from the Immigration and Naturalization Service that he or she is in the United States for other than a temporary purpose with the intention of becoming a citizen or permanent resident; or

(iv) Is a permanent resident of the Trust Territory of the Pacific Island;

(2) Resides in the target area or attends a target school;

(3) Has completed the sixth grade or is at least 12 years old and is not older than 27. However, if there is no Educational Opportunity Center serving the same target area as the Talent Search project, an individual may be older than 27 and still be an eligible participant;

(4) In the case of an individual enrolled in or graduated from secondary school, has potential for education at the postsecondary level;

(5) In the case of an individual who has not completed a program of education at the secondary or postsecondary level, has the ability to re-enter and complete a program of education at the secondary or postsecondary level;

(6) Needs one or more of the services provided by the Talent Search project in order to pursue successfully a program of education beyond high school; and

(7) Is not currently enrolled in a postsecondary education program.

(b) *Veterans.* A veteran, regardless of age, is eligible to participate in a Talent Search project if he or she satisfies the eligibility requirements in paragraph (a) of this section other than the requirement of paragarph (a)(3).

(20 U.S.C. 1070d, 1070d-1)

§ 643.4 Eligible project participants: selection requirements.

(a)(1) At least two thirds of the eligible individuals an applicant proposes to serve under a Talent Search project must also be low-income individuals who are potential, first-generation college students.

(2) A "low-income individual" means an individual who comes from a family whose family's taxable income did not exceed 150 percent of the poverty level in the calendar year preceding the year in which the individual participates in the project. Poverty level income is determined by using criteria of poverty established by the Bureau of the Census, U.S. Department of Commerce.

(3)(i) A "potential, first-generation college student" means a person neither of whose parents received a bachelor's degree.

(ii) With respect to an individual 18 years and under, only the natural or adoptive parents who are currently residing with the individual are considered the individual's parents in determining whether the individual meets the criterion of being a potential, first-generation college student.

(iii) With respect to an individual over 18, only the natural or adoptive parents who were residing with the individual before the individual's eighteenth birthday are considered the individual's parents in determining whether the individual meets the criterion of being a potential, first-generation college student.

(b) A grantee may not select an individual who is or will be served by an Educational Opportunity Center or by another Talent Search project.

(c) The grantee shall make every effort to provide that the participant population reflects the ethnic and racial diversity of the individuals eligible to be served by the project.

(20 U.S.C. 1070d, 1070d-1)

§ 643.5 Target area.

A Talent Search project provides services to eligible participants residing in a target area or attending a target school.

(20 U.S.C. 1070d, 1070d-1)

§ 643.6 Regulations that apply to the Talent Search Program.

The following regulations apply to the Talent Search Program:

(a) The Education Department General Administrative Regulations (EDGAR) in 34 CFR Part 75 (Direct Grant Programs) and 34 CFR Part 77 (Definitions).

(b) The regulations in this Part 643.

(20 U.S.C. 3474)

§ 643.7 Definitions that apply to the Talent Search Program.

(a) *Definitions in EDGAR.* The following terms used in this part are defined in 34 CFR Part 77:

Applicant	Grantee
Application	Nonprofit
Award	Private
Budget	Project
EDGAR	Public
Equipment	Secondary school
Facilities	Secretary
Fiscal year	State
Grant	Supplies

(b) *Definitions that apply to this part.* The following definitions apply to this part:

"Act" means the Higher Education Act of 1965, as amended.

(20 U.S.C. 1001 et seq.)

"Combination of institutions of higher education" means:

(1) A group of institutions of higher education that have entered into a cooperative arrangement to carry out a common objective; or

(2) A public or nonprofit private agency, organization, or institution designated or created by a group of institutions of higher education to carry out a common objective on their behalf.

(20 U.S.C. 1141(j))

"Institution of higher education" means an educational institution as defined in Sections 1201(a) and 481 of the Higher Education Act of 1965, as amended.

(20 U.S.C. 1141(a); 1088)

"Target area" means a discrete geographic area in which at least 20 percent of the resident families have a family income that does not exceed the low-income family level contained in "Current Population Reports," Series P, Bureau of the Census, Department of Commerce.

(20 U.S.C. 1070d, 1070d-1)

"Target school" means a secondary school that serves students residing in a target area and is or would be served by a Talent Search project.

(20 U.S.C. 1070d, 1070d-1)

"Veteran" means a person who served on active duty in the United States Armed Forces and was discharged or released under conditions other than dishonorable.

(20 U.S.C. 101(2))

Subpart B—What Kinds of Projects Does the Department of Education Assist Under This Program?

§ 643.10 Kinds of projects assisted under the Talent Search Program.

(a) A Talent Search project shall, as needed by participants—

(1) Collect and disseminate information regarding the variety of postsecondary educational opportunities, student financial aid, academic assistance, and career options available to participants;

(2)(i) Advise and counsel each participant regarding available student financial assistance, career options, and the appropriate postsecondary institution or institutions for that person;

(ii) If the grantee is an institution of higher education, it shall not use the project as part of its recruitment program;

(3) Assist participants in applying for—

(i)(A) Admission to postsecondary institutions; or

(B) Readmission to secondary schools, or postsecondary institutions that provide supportive services needed by participants; and

(ii) Student financial aid;

(4) Determine each participant's interests, career goals, academic potential, and need for services through the use of standardized measurement instruments or other verifiable indicators such as written recommendations from educators, counselors, or employers;

(5) In conjunction with schools, agencies, and organizations in the target area, develop, publicize, and implement strategies that will—

(i) Increase the probability of participants completing secondary school;

(ii) Increase the probability of participants being admitted to postsecondary school;

(iii) Increase the probability of dropouts being readmitted to secondary or postsecondary school; and

(iv) Decrease the probability of participants dropping out of secondary school;

(6) Establish a relationship with service agencies in the target area—so that the grantee is aware of the various services available to participants—and refer participants to these service agencies as appropriate; and

(7) Establish a relationship with postsecondary institutions to determine current admission requirements, filing and deadline dates for required application materials—such as admission and financial aid applications—course requirements, academic policies, and the availability of appropriate supportive services.

(b) Talent Search projects that serve veterans shall, in addition to carrying out the functions in paragraph (a) of this section—

(1) Refer veterans to high school equivalency certification programs, if necessary; and

(2)(i) Establish a relationship with the Veterans Administration, projects under the Veterans-Cost-of-Instruction Program at postsecondary institutions, State veterans agencies, and other veterans associations so that the grantee is aware of the various benefits and services available to veterans; and

(ii) Refer veterans to these agencies and associations as appropriate.

(c) A Talent Search project may provide tutorial services for a participant who is not enrolled in an Upward Bound or a Special Services project that provides tutoring.

(d) A Talent Search project shall set specific objectives—stated in measurable terms—that the project should attain during each project year to meet the goals of the program.

(e) Each project shall engage a full-time project director. However, the Secretary may waive the full-time requirement as specified in EDGAR, 34 CFR § 75.511.

(f) Each project shall determine—

(1) Whether a participant admitted to a secondary or postsecondary institution actually enrolled in that institution; and

(2) Whether a participant enrolled in a postsecondary institution received adequate financial assistance and supportive services, if needed.

(g) Each project shall document the effect that the project had on—

(1) Increasing the secondary school completion rate of participants;

(2) Increasing the postsecondary school admissions rate of participants;

(3) Increasing the secondary and postsecondary readmission rates for participants who had not completed secondary or postsecondary education; and

(4) Decreasing the secondary school dropout rates of participants.

(20 U.S.C. 1070d, 1070d-1)

§ 643.11 Project location.

Talent Search services shall be provided in a setting that is accessible and approachable by the participants.

(20 U.S.C. 1070d, 1070d-1)

Subpart C—How Does One Apply for a Grant?

§ 643.20 How to apply for funds.

To apply for a new or continuation grant, an applicant shall follow the procedures and meet the requirements contained in EDGAR, 34 CFR Part 75, Subpart C.

(20 U.S.C. 1221e-3(a)(1); 1070d, 1070d-1)

Subpart D—How Does the Secretary Make a Grant?

§ 643.30 How the Secretary evaluates an application.

(a) The Secretary evaluates an application on the basis of the criteria in § 643.31.

(1) The Secretary awards up to 100 points for these criteria.

(2) The maximum possible score for each complete criterion is indicated in parentheses next to the heating of that criterion.

(b) For applicants that have conducted a Talent Search project within the previous three years, the Secretary considers the prior experience of the applicant on the basis of § 643.32. The Secretary awards up to 30 additional points for prior experience.

(c) In selecting proposed projects for funding, the Secretary considers the need for the project in the area the applicant proposes to serve as compared to the need in areas other applicants propose to serve.

(20 U.S.C. 1070d, 1070d-1).

§ 643.31 Selection criteria the Secretary uses.

The Secretary uses the following criteria—in paragraphs (a) through (h)—to evaluate applications for new awards:

(a) *Plan of operation.* (10 points)

(1) The Secretary reviews each application for information that shows the quality of the plan of operation for the project.

(2) The Secretary looks for information that shows—

(i) High quality in the design of the project;

(ii) An effective plan of management that ensures proper and efficient administration of the project;

(iii) A clear description of how the objectives of the project relate to the purpose of the program;

(iv) The way the applicant plans to use its resources and personnel to achieve each objective; and

(v) A clear description of how the applicant will provide equal access and treatment for eligible project participants who are members of groups that have been traditionally underrepresented, such as—

(A) Members of racial or ethnic minority groups;

(B) Women; and

(C) Handicapped persons.

(b) *Quality of key personnel.* (10 points)

(1) The Secretary reviews each application for information that shows the qualifications of the key personnel the applicant plans to use on the project.

(2) The Secretary looks for information that shows—

(i) The qualifications of the project director;

(ii) The qualifications of each of the other key personnel to be used in the project;

(iii) The time that each person referred to in paragraphs (b)(2)(i) and (ii) of this section plans to commit to the project; and

(iv) The extent to which the applicant, as part of its nondiscriminatory employment practices, encourages applications for employment from persons who are members of groups that have been traditionally underrepresented, such as—

(A) Members of racial or ethnic minority groups;

(B) Women;

(C) Handicapped persons; and

(D) The elderly.

(3) To determine the qualifications of a person, the Secretary considers evidence of past experience and training, in fields related to the objectives of the project, as well as other information that the applicant provides.

(c) *Budget and cost effectiveness.* (5 points)

(1) The Secretary reviews each application for information that shows that the project has an adequate budget and is cost effective.

(2) The Secretary looks for information that shows—

(i) The budget for the project is adequate to support the project activities; and

(ii) Costs are reasonable in relation to the objectives of the project.

(d) *Evaluation plan.* (10 points)

(1) The Secretary reviews each application for information that shows the quality of the evaluation plan for the project.

(2) The Secretary looks for information that shows methods of evaluation that are appropriate for the project and, to the extent possible, are objective and produce data that are quantifiable.

(e) *Adequacy of resources.* (5 points)

(1) The Secretary reviews each application for information that shows that the applicant plans to devote adequate resources to the project.

(2) The Secretary looks for information that shows—

(i) The facilities that the applicant plans to use are adequate; and

(ii) The equipment and supplies that the applicant plans to use are adequate.

(f) *Need for the project.* (25 points)

(1) The Secretary reviews each application for information that shows that a need for a Talent Search project exists in the area the applicant plans to serve.

(2) The Secretary looks for information that shows—

(i) The extent to which the percentage of low-income families residing in the geographically defined target area exceeds 20 percent;

(ii) The number and percentage of individuals who are eligible to be served by a Talent Search project who reside in the target area or attend target schools; and

(iii) The extent to which the target area lacks the services and activities that are provided by a Talent Search project.

(3) To determine the extent of the need for a project, the Secretary also considers—

(i) For each of the three preceding years, the estimated dropout rates for each of the target schools;

(ii) For each of the three preceding years, the estimated number and percentage of students from each target school who enrolled in postsecondary institutions;

(iii) For each of the three preceding years, the estimated number and percentage of students in each target school who are from low-income families; and

(iv) The number of veterans in the target area who need Talent Search services to pursue postsecondary education.

(g) *Likelihood of success.* (20 points)

(1) The Secretary reviews each application for information that shows the likelihood of success.

(2) The Secretary looks for information that shows the extent to which the project is likely to, in the target area—

(i) Increase the secondary school completion rate of project participants;

(ii) Increase the postsecondary school admission rate of project participants;

(iii) Increase the secondary and postsecondary readmission rates of those participants who have not completed secondary or postsecondary education; and

(iv) Decrease the secondary school dropout rates of project participants.

(3) The Secretary looks for information that shows the comprehensiveness of the applicant's plan for providing the services and activities listed in § 643.10.

(h) *Resources and organization.* (15 points)

(1) The Secretary reviews each application for information that shows that the applicant plans to devote adequate resources and organization to the project.

(2) The Secretary looks for information that shows—

(i) The extent to which the applicant plans to publicize and inform the target schools and residents of the target area of the services provided by the Talent Search project; and

(ii) The extent to which the applicant has received and has included in its application written commitments by community organizations and other appropriate groups for the use of community and other resources to supplement authorized activities.

(20 U.S.C. 1221e-3(a)(1); 1070d, 1070d-1)

§ 643.32 Prior experience.

For each applicant that has conducted a Talent Search project within the previous three years, the Secretary—

(a) Reviews materials and documents, such as performance reports, evaluation reports, and site visit reports, for information that shows that the applicant has successfully carried out a Talent Search project during that time;

(b) Looks for information that shows the extent of the applicant's success in meeting the performance standards listed in § 643.42; and

(c) Awards up to 30 additional points for this criterion.

(20 U.S.C. 1070d, 1070d-1)

Subpart E—What Conditions Must Be Met by a Grantee?

§ 643.40 Allowable costs.

Allowable project costs may include the following costs reasonably related to carrying out a Talent Search project:

(a) Transportation and meal costs for participants and staff for—

(1) Approved visits to postsecondary educational institutions in the area;

(2) Participation in "College Days" activities; and

(3) Field trips to observe and meet with persons who are employed in various career fields and who can act as role models for participants.

(b) Purchase of testing materials.

(c) If approved by the Secretary, in-service training of project staff.

(d) Tutorial services if none are available to participants through an Upward Bound or a Special Services project in the target area.

(e) The rental of space if space is not available at the host institution and the space rented is not owned by the host institution.

(20 U.S.C. 1070d, 1070d-1)

§643.41 Nonallowable costs.

Costs that may not be charged against a grant under this program include the following:

(a) Tuition, fees, stipends, or other forms of direct financial support for individuals participating in project activities.

(b) Application fees for enrollment or financial aid.

(c) Lodging for project participants.

(d) Duplication of services that are available to participants through—

(1) State, local, or private sources;

(2) The institution or agency sponsoring the project; or

(3) Other Federal programs.

(e) Research not directly related to the evaluation or improvement of the project.

(f) The purchase of major equipment, unless the grantee demonstrates to the Secretary's satisfaction that puchase is less expensive than renting.

(g) The construction, renovation, or remodeling of any facilities.

(20 U.S.C. 1070d, 1070d-1)

§ 643.42 Performance standards. [Reserved]

[The Secretary will publish, as a separate notice of proposed rulemaking, proposed performance standards.]

Subpart F—What Are the Administrative Responsibilities of a Grantee?

§643.50 Recordkeeping.

(a) Each grantee shall keep records on the services provided to individuals and groups.

(b) For each participant who receives project services through personal contact on more than two occasions, the grantee shall keep the following on file:

(1) The participant's name, age, sex, ethnic and racial background, telephone number, and permanent address.

(2) The information used to select the participant, including—

(i) Documentation of the participant's eligibility to receive services; and

(ii) Copies of the participant's high school transcripts and test scores such as aptitude and achievement scores and interest inventories.

(3) Documentation of services received by the participant, including—

(i) Counseling services;

(ii) Tutorial services;

(iii) Visits made to postsecondary institutions;

(iv) Assistance in applying for admission to postsecondary institutions; and

(v) Assistance in applying for student financial aid.

(4) Documentation of follow-up of the participant including, if appropirate—

(i) The names of the postsecondary institutions that accepted the participant for admission and the one in which the participant enrolled; and

(ii) The amount and type of student financial aid received by the participant.

(c) For each participant who receives project services through personal contact on one or two occasions, the grantee shall keep records that include the particpant's—

(1) Name;

(2) Telephone number;

(3) Address;

(4) Age;

(5) Sex;

(6) Ethnic and racial background; and

(7) Service(s) received.

(d) For those services that are not provided exclusively to individual participants, the grantee shall maintain records that include—

(1) The type and kind of group services provided;

(2) The number of participants;

(3) The time and place the services were provided; and

(4) Documentation of outreach activities.

(20 U.S.C. 1070, 1070d-1)

[FR Doc. 80-40531 Filed 12-30-80; 8:45 am]
BILLING CODE 4000-01-M

federal register

Wednesday
December 31, 1980

Part XIV

Department of Education

Upward Bound Program

DEPARTMENT OF EDUCATION

34 CFR Part 645

Upward Bound Program

AGENCY: Department of Education.

ACTION: Notice of Proposed Rulemaking.

SUMMARY: The Secretary proposes to amend the regulations for the Upward Bound program. The regulations are being amended to reflect the statutory changes contained in the Education Amendments of 1980, and to clarify and simplify the requirements governing the program.

DATES: Comments must be received on or before March 2, 1981.

Currently the Department of Education plans to hold public meetings in four cities. The tentative date for each meeting follows:

February 9, 1981, Washington, D.C.
February 11, 1981, Chicago, Illinois
February 17, 1981, San Francisco, California
February 19, 1981, Dallas, Texas

ADDRESSES: Comments should be addressed to Mary Kathleen Smith, (Room 3514 ROB-3), Department of Education, 400 Maryland Avenue, SW., Washington, D.C. 20202.

The public will be advised—through a notice published in the Federal Register—of the time and specific location of each meeting listed in the Dates section of this Preamble.

FOR FURTHER INFORMATION CONTACT: Mary Kathleen Smith, Telephone No. (202) 245-2511.

SUPPLEMENTARY INFORMATION: On May 24, 1977, the Commissioner of Education published in the Federal Register the final regulations for the Upward Bound program. Those regulations govern the grant awards made during fiscal year 1981. The Education Amendments of 1980 changed the Upward Bound program in several respects and these proposed regulations reflect these changes.

The Secretary proposes to make changes in the substance and structure of the Upward Bound regulations. The changes in substance are the result of both statutory changes and policy clarifications. The structural changes were made for reasons of clarity and consistency.

Restructuring the Regulations

In comparing these proposed regulations with those previously governing the program, the reader will notice major revisions in format. These proposed changes reflect the Secretary's concern that the format of the regulations be easy to understand and follow. The proposed regulations for the Special Programs for Students for Disadvantaged Backgrounds, of which the Upward Bound program is a part, are made consistent with these format changes. In restructuring the regulations, the Secretary has followed the format of the Education Department General Administrative Regulations (EDGAR).

These regulations incorporate by reference 34 CFR Parts 75 and 77 of EDGAR; therefore, the regulations do not repeat certain types of information and requirements that are found in EDGAR. However, the general selection criteria found in EDGAR (34 CFR Part 75.202 through 75.206) have been repeated in these regulations for the convenience of the applicant (Section 644.31(a) through (e)).

Statutory and Policy Changes

A significant change made by the Education Amendments of 1980 involves the eligible participant requirements. Upward Bound grantees must assure that not less than two-thirds of the persons participating in the project be low-income individuals who are also potential, first-generation college students. The remaining individuals participating in the project must be either low-income individuals, or potential, first-generation college students.

The Education Amendments of 1980 define both first-generation college student and low-income individual. These definitions have been repeated in these regulations.

Another major change made by the Education Admendments of 1980 is the requirement that the Secretary, when making grants for Upward Bound projects, shall consider the prior experience of service delivery under the Upward Bound program for each applicant. The Secretary proposes to make "Prior experience" one of the selection criteria for this program. The public is invited to comment on this approach and on the weighting of that criterion as well as that of the other selection criteria.

The Secretary intends to base the evaluation of prior experience on published performance standards. These performance standards have not yet been developed. The public is invited to submit suggestions for performance standards at this time. The Secretary will develop the performance standards at a later date and the public will have the opportunity to comment on the specific standards when they are published as proposed rules.

A final significant change made by the Education Amendments of 1980 is the exception permitted so that projects may serve persons who are younger than 13 or who have completed less than 8 years of elementary school. This exception is permitted if the secondary schools in the project's target area have a high dropout rate.

The policy changes expressed in this notice of proposed rulemaking would, for the most part, reduce existing restrictions and limitations on grantees. The proposed summer component provision, section 645.12 paragraph (f), would permit a project to have either a residential or a nonresidential summer component with no restrictions on the percentage of nonresidential projects funded in any year.

The Secretary proposes to clarify the requirements for determining whether an area qualifies as a target area. For an area to qualify at least 20 percent of its resident families would be required to have family incomes that do not exceed the low-income family level contained in "Current Population Reports", published annually by the Bureau of the Census. The Bureau of the Census maintains information on census tracts and minor civil divisions that have 20 percent or more of the families at or below the low-income level.

Invitation to Comment:

Interested persons are invited to submit comments and recommendations regarding these proposed regulations. Written comments and recommendations may be sent to the address given at the beginning of this Preamble. All comments received on or before March 2, 1981, will be considered in the development of the final regulations.

All comments submitted in response to these proposed regulations will be available for public inspection, during and after the comment period, in Room 3514, ROB-3, 7th and D Streets, SW, Washington, D.C., between the hours of 8:30 a.m. and 4:00 p.m., Monday through Friday of each week except Federal holidays.

Assessment of Educational Impact

The Department particularly requests comments on whether the proposed regulations in this document would require transmission of information that is already being gathered by or is available from any other agency or authority of the United States.

Citation of Legal Authority

A citation of statutory or other legal authority is placed in parentheses on the line following each substantive provision of these regulations.

Dated: December 23, 1980.

Shirley M. Hufstedler,

Secretary of Education.

(Catalog of Federal Domestic Assistance No. 84.047, Upward Bound)

It is proposed that Part 645 of Title 34 of the Code of Federal Regulations, be revised to read as follows:

PART 645—UPWARD BOUND PROGRAM

Subpart A—General

Sec.
645.1 The Upward Bound Program.
645.2 Eligible grantees.
645.3 Eligible project participants: General.
645.4 Eligible project participants: Section requirements.
645.5 Target area.
645.6 Regulations that apply to the Upward Bound Program.
645.7 Definitions that apply to the Upward Bound Program.

Subpart B—What Kinds of Projects Does the Department of Education Assist Under This Program?

645.10 Kinds of projects assisted under the Upward Bound Program.
645.11 Academic year component.
645.12 Summer component.
645.13 Veterans' projects.
645.14 Educational component for participants with limited proficiency in English.
645.15 Project size.

Subpart C—How Does One Apply for a Grant?

645.20 How to apply for funds.

Subpart D—How Does the Secretary Make a Grant?

645.30 How the Secretary evaluates an application.
645.31 Selection criteria the Secretary uses.
645.32 Prior experience.

Subpart E—What Conditions Must Be Met by a Grantee?

645.40 Allowable costs.
645.41 Nonallowable costs.
645.42 Stipends.
645.43 Performance standards.

Subpart F—What Are the Administrative Responsibilities of a Grantee?

645.50 Recordkeeping.

Authority: Secs. 417A and 417C of Title IV of the Higher Education Act of 1965, as amended (20 U.S.C. 107d; 1070d-1a), unless otherwise noted.

Subpart A—General

§ 645.1 The Upward Bound Program.

The Upward Bound program provides Federal financial assistance to projects designed to improve academic performance and increase motivational levels to enable eligible participants to complete secondary school and successfully pursue postsecondary educational programs.

(20 U.S.C. 1070d, 1070d-1a)

§ 645.2 Eligible grantees.

The following are eligible to apply for a grant to carry out an Upward Bound project:

(a) Institutions of higher education.

(b) Combinations of institutions of higher education.

(c) Public and private agencies and organizations.

(d) Secondary schools, in exceptional cases, if there are no other applicants capable of providing this program in the target areas to be served by the proposed projects.

(20 U.S.C. 1070d, 1070d-1a)

§ 645.3 Eligible project participants: general.

(a) An individual is eligible to participate in an Upward Bound project if the individual—

(1)(i) Is a citizen or national of the United States;

(ii) Is a permanent resident of the United States;

(iii) Provides evidence from the Immigration and Naturalization Service that he or she is in the United States for other than a temporary purpose with the intention of becoming a citizen or permanent resident; or

(iv) Is a permanent resident of the Trust Territory of the Pacific Islands;

(2)(i) Resides in the target area or attends a target school; or

(ii) Is a dropout who resides in the target area and is committed to re-entering secondary school the fall semester immediately following participation in the Upward Bound summer component;

(3) Is a potential, first-generation college student or is, at the time of initial selection, a low-income individual;

(4) Has a need for academic support in order to successfully pursue a program of education beyond high school; and

(5)(i) At the time of initial selection, has completed the eighth grade but has not entered the twelfth grade and is at least 13 years old but not older than 19.

(ii) However, the project may serve individuals who are less than 13 or have not completed the eight grade if the secondary schools in the project's target area have an unusually high dropout rate.

(b) *Veterans.* A veteran, regardless of age, is eligible to participate in an Upward Bound project if he or she satisfies the eligibility requirements in paragraph (a) of this section other than the requirements of paragraph (a)(5).

(20 U.S.C. 1070d, 1070d-1a)

§ 645.4 Eligible project participants: selection requirements.

(a)(1) At least two thirds of the eligible individuals the applicant proposes to serve under an Upward Bound project must be low-income individuals who are also potential, first-generation college students.

(2) The remaining individuals the applicant proposes to serve must quality as either low-income individuals or potential, first-generation college students.

(3) A "low-income individual" means an individual who comes from a family whose family's taxable income did not exceed 150 percent of the poverty level in the calendar year preceding the year in which the individual participates in the project. Poverty level income is determined by using criteria of poverty established by the Bureau of the Census, U.S. Department of Commerce.

(4)(i) A "potential, first-generation college student" means a person neither of whose parents received a bachelor's degree.

(ii) With respect to individuals 18 years of age and under, only the natural or adoptive parents who are currently residing with the individual are considered the individual's parents in determining whether the individual meets the criterion of being a potential, first-generation college student.

(iii) With respect to individuals over 18, only the natural or adoptive parents who were residing with the individual before the individual's eighteenth birthday are considered the individual's parents in determining whether the individual meets the criterion of being a potential, first-generation college student.

(b) The grantee shall make every effort to provide that the participant population reflects the ethnic and racial diversity of the individuals eligible to be served by the project.

(20 U.S.C. 1070d, 1070d-1a)

§ 645.5 Target area.

(a) An Upward Bound project provides services to eligible participants residing in a target area or attending a target school.

(b)(1) In general, no part of the target area may be more than 50 miles from the applicant.

(2) However, the target area may be more than 50 miles from the applicant if the applicant can show to the satisfaction of the Secretary that the increased distance will not hinder the effectiveness of the project or prevent the project from achieving its stated goals and objectives.

(20 U.S.C. 1070d, 1070d-1a)

§ 645.6 Regulations that apply to the Upward Bound Program.

The following regulations apply to the Upward Bound Program:

(a) The Education Department General Administrative Regulations (EDGAR) in 34 CFR Part 75 (Direct Grant Programs) and in 34 CFR Part 77 (Definitions).

(b) The regulations in this Part 645.

(20 U.S.C. 3474)

§ 645.7 Definitions that apply to the Upward Bound Program.

(a) *Definitions in EDGAR.* The following terms used in this part are defined in 34 CFR Part 77:

Applicant	Grantee
Application	Nonprofit
Award	Private
Budget	Project
EDGAR	Public
Equipment	Secondary School
Facilities	Secretary
Fiscal year	State
Grant	Supplies

(b) *Definitions that apply to this part.* The following definitions apply to this part:

"Act" means the Higher Education Act of 1965, as amended.

(20 U.S.C. 1001 et seq.)

"Combination of institutions of higher education" means:

(1) A group of institutions of higher education that have entered into a cooperative arrangement to carry out a common objective; or

(2) A public or nonprofit private agency, organization, or institution designated or created by a group of institutions of higher education to carry out a common objective on their behalf.

(20 U.S.C. 1141(j))

"Institution of higher education" means an educational institution as defined in Sections 1201(a) and 481 of the Higher Education Act of 1965, as amended.

(20 U.S.C. 1141(a); 1088)

"Limited proficiency in English," with reference to an individual, means an individual—

(1)(i) Who was not born in the United States or whose native language is other than English;

(ii) Who comes from a home in which a language other than English is most relied upon for communication; or

(iii) Who is an American Indian or Alaskan Native student and comes from an environment in which a language other than English has had a significant inpact on his or her level of proficiency in the English language; and

(2) Who, as a result of the circumstances described in paragraph (1) of this definition, has sufficient difficulty in understanding, speaking, reading, or writing the English language to deny him or her the opportunity to learn successfully in classrooms in which the language of instruction is English.

(20 U.S.C. 3223(a)(1))

"Target area" means a discrete geographic area in which at least 20 percent of the resident families have a family income that does not exceed the low-income family level contained in "Current Population Reports," Series P, Bureau of the Census, Department of Commerce.

(20 U.S.C. 1070d, 1070d-1a)

"Target school" means a secondary school that serves students residing in a target area and is or would be served by an Upward Bound project.

(20 U.S.C. 1070d, 1070d-1a)

"Veteran" means a person who served on active duty in the United States Armed Forces and was discharged or released under conditions other than dishonorable.

(38 U.S.C. 101(2))

Subpart B—What Kinds of Projects Does the Department of Education Assist Under This Program?

§ 645.10 Kinds of projects assisted under the Upward Bound Program.

(a) Three kinds of projects are assisted under the Upward Bound Program:

(1) Regular Upward Bound projects that have both an academic year and a summer component.

(2) Upward Bound projects that have an additional component that provides services for persons with limited proficiency in English.

(3) Upward Bound Veterans projects that provide services exclusively to veterans.

(b) An Upward Bound project, except an Upward Bound Veterans project, shall have both an academic year component, as described in § 645.11, and a summer component, as described in § 645.12.

(c) An Upward Bound project, including an Upward Bound Veterans project, shall—

(1) Publicize in the target area, particularly in the target schools, the opportunity to participate in the project informing interested students, parents, and veterans of the criteria for eligibility and selection;

(2) Develop and use procedures to identify, through a variety of sources, individuals who are eligible to participate;

(3) Develop and use procedures to select participants from among eligible individuals;

(4) Diagnose specific areas of academic strengths and weaknesses in each participant through the use of standardized tests or other recognized procedures;

(5) Set specific objectives—stated in measurable terms—that each participant needs to attain while in the project in order to increase his or her opportunity to gain admission as a regular student at an institution of higher education appropriate to the individual's abilities and career ambitions;

(6) Set specific objectives—stated in measurable terms—that the project should attain during each project year to meet the goals of the program;

(7) Develop an individualized plan of program support to improve each participant's skills;

(8) Engage a full-time project director. However, the Secretary may waive the full-time requirement as specified in EDGAR, 34 CFR § 75.511;

(9) Design and implement an evaluation mechanism to test the effectiveness of the project's—

(i) Progress in meeting approved goals and objectives;

(ii) Efforts in remedying academic deficiencies of participants; and

(iii) Activities that are designed to effect in the academic and personal skills of project participants changes that are necessary for success in postsecondary education;

(10) Assure that all the facilities of the grantee, both academic and nonacademic, are made available to project participants on the same basis as they are made available to the grantee's regularly enrolled students;

(11) Identify and use institutional and community resources to diagnose in participants health problems that are impeding learning and, to the extent possible, use these resources to alleviate those problems;

(12)(i) Establish a relationship with service agencies in the target area so that the grantee is aware of the various services available; and

(ii) Refer participants to these service agencies as appropriate;

(13) Implement a plan for following participants through their postsecondary educational programs;

(14) If coordination is cost-effective and improves the provisions of services to participants, coordinate the project with—

(i) Talent Search, Upward Bound, Special Services, and Educational Opportunity Centers projects operating in close geographic proximity; and

(ii) Federal, State, and local projects that are similar to Upward Bound and are operating in close geographic proximity; and

(15) Make every effort to secure for each successful graduate from the project admission, with adequate financial aid, to an institution of postsecondary education that is appropriate to that participant's abilities and ambitions. This effort shall include, if necessary, special review from the admissions and financial aid personnel of the host institution.

(20 U.S.C. 1070d, 1070d-1a)

§ 645.11 Academic year component.

(a) During the academic year an Upward Bound project shall—

(1) Provide to participants on a weekly basis—

(i) Individualized guidance and personal, career, and academic counseling;

(ii) Tutoring in those courses being studied by the participant at the secondary school; and

(iii) Exposure to academic programs and other educational activities—not usually available to disadvantaged youth—that have as their purpose the intellectual, social, and cultural development of the participants. These programs and activities may include trips to museums, laboratories, work sites, and educational institutions;

(2) Provide as may be needed by the participants—

(i) Advice and assistance in high school course selection;

(ii) Counseling and orientation in the requirements for postsecondary education;

(iii) Assistance in preparing admission, financial aid, and other forms necessary to attend a postsecondary institution;

(iv) Assistance in preparing for national standardized tests required for postsecondary admission; and

(v) Activities designed to acquaint participants with the range of career options available to them;

(3) Provide a continuing evaluation of each participant's progress toward achieving adequate academic skills and motivation necessary for success in postsecondary education, including an assessment of each participant's realistic postsecondary educational opportunities and potential; and

(4) Provide—with the specific approval of the Secretary—those activities that have as their purpose the educational preparation of participants for postsecondary admission.

(b) If the project location or the project staff are not readily accessible to participants because of distance or lack of transportation, the grantee may, with the Secretary's permission, provide the services described in paragraph (a)(1) of this section every two weeks.

(20 U.S.C. 1070d, 1070d-1a)

§ 645.12 Summer component.

(a) The summer component of an Upward Bound project shall last at least six weeks.

(b)(1) The project shall enroll students for the summer component and shall establish a waiting list for the component before the summer component begins.

(2) If a vacancy arises, the project may provide summer component activities to individuals on the waiting list.

(c)(1) The project shall make special provisions by offering a Bridge Summer Component for those participants who have graduated from secondary school and who intend to enroll at a postsecondary institution in the upcoming fall semester. In this component, the project shall provide participants with activities that aid in the transition from high school to postsecondary education.

(2) The project may provide, through the Bridge Summer Component—

(i) College courses that participants may take for credit;

(ii) College courses that participants may audit;

(iii) Preview courses that anticipate college courses because they are taught by the lecture method, require notetaking, or have other characteristics of college courses; and

(iv) Study skills seminars.

(d) During the summer component, the project shall provide facilities to adequately and effectively carry out the activities listed in paragraphs (e)(1) through (e)(7) of this section.

(e) During the summer component, the project shall, as needed by the participants—

(1) Provide, as appropriate to meet the individual needs of participants who have not completed secondary school, intensive skills development and instruction in academic subjects—such as reading, writing, study skills, and mathematics—that are required for secondary school graduation and for success in postsecondary education;

(2) Provide to participants instruction designed to prepare them for careers in which persons from disadvantaged backgrounds have been historically underrepresented, such as careers based on science and mathematics;

(3) Provide motivational activities through—

(i) Personal, career, and academic counseling that meet the individual needs of each participant;

(ii) Activities—such as field trips to museums, laboratories, work sites, and educational institutions—that have as their purpose the intellectual, social, cultural, and career development of the participants;

(4) Provide a qualified staff that includes but is not limited to—

(i) Teachers from the target schools;

(ii) Postsecondary instructors from the host institution, including graduate assistants; and

(iii) Other individuals with areas of specialization that will enhance the educational experience of the participants;

(5) Provide tutors and peer counselors who are postsecondary or graduate students who have demonstrated success in postsecondary education;

(6) Provide other services that have as their purpose the educational preparation of participants for admission to postsecondary institutions. These services may include assisting participants in preparing applications for admission and financial aid forms and, if necessary, ensuring that participants take national standardized tests required for postsecondary admission; and

(7) Provide meals to participants.

(f)(1) The summer component may be either a residential program or a nonresidential program.

(2) If the summer component is residential, the project must house the Upward Bound participants in the dormitories on campus that are used by regularly enrolled students at the host institution during the academic year.

(3) The Secretary may waive the requirement of paragraph (f)(2) of this section if the project location is not readily accessible to participants because of distance or lack of transportation and the grantee does not have residential facilities on campus.

(20 U.S.C. 1070d, 1070d-1a)

§ 645.13 Veterans' projects.

The Secretary may fund Upward Bound projects for veterans. In addition to the requirements of § 645.10(c), Upward Bound Veterans projects shall—

(a) Be composed exclusively of veterans; and

(b)(1) Provide intensive basic skills development in those academic subjects required for the successful completion of a high school equivalency program, if necessary, and for admission to postsecondary institutions;

(2) Provide short-term remedial-refresher courses for those veterans who

are high school graduates but who have delated pursuing postsecondary education. If the grantee is an institution of higher education, these courses shall not duplicate courses otherwise available to veterans at the institution;

(3) Provide individualized guidance, including personal, academic, and career counseling;

(4) Establish a relationship with the Veterans Administration, projects under the Veterans-Cost-of-Instruction Program at postsecondary institutions, State veteran agencies, and other veteran association so that the grantee and the veteran are aware of the various benefits and services available to the veteran;

(5) Refer veterans, as needed and on an individual basis, to health, employment, housing, and legal agencies, to the Veterans Administration, and to other resources to resolve educational and noneducational problems;

(6) Assist veterans to secure certification for the payment of veterans' educational benefits by appropriate State and Federal agencies before the beginning of educational activities; and

(7) Assist veterans in securing admission to postsecondary educational programs and in obtaining financial aid.

(20 U.S.C. 1070d-1a)

§ 645.14 Educational component for participants with limited proficiency in English.

(a) An Upward Bound project, including an Upward Bound Veterans project, may have a component to serve individuals with limited proficiency in English.

(b) A project with this component shall—

(1) Provide instruction in the use of the English language, either through the project or through other programs available in the area;

(2) Provide, as applicable, programs, services, and activities described in §§ 645.10, 645.11, 645.12, and 645.13 that are specifically designed for participants of limited proficiency in English; and

(3) If the project cannot serve all individuals eligible for the component, select for participation individuals who have the greatest difficulty understanding, speaking, reading, and writing the English language.

(20 U.S.C. 1070d, 1070d-1a)

§ 645.15 Project size.

(a) Each Upward Bound project, other than an Upward Bound Veterans project, shall serve between 65 and 150 participants.

(b) Each Upward Bound Veterans project shall serve a minimum of 120 veterans during a project year.

(c) The Secretary may authorize exceptions to paragraphs (a) and (b) of this section if the applicant can show that granting the exception will not hinder the effectiveness of the project or prevent it from achieving its stated goals or objectives.

(20 U.S.C. 1070d, 1070d-1a)

Subpart C—How Does One Apply for a Grant?

§ 645.20 How to apply for funds.

To apply for a new or continuation grant, an applicant shall follow the procedures and meet the requirements contained in EDGAR, 34 CFR Part 75, Subpart C.

(20 U.S.C. 3474; 1070d, 1070d-1a)

Subpart D—How Does The Secretary Make a Grant?

§ 645.30 How the Secretary evaluates an application.

(a) The Secretary evaluates an application on the basis of the criteria in § 645.31.

(1) The Secretary awards up to 100 possible points for these criteria.

(2) The maximum possible score for each complete criterion is indicated in parentheses next to the heading of the criterion.

(b) For applicants that have conducted an Upward Bound project within the previous three years, the Secretary considers the prior experience of the applicant on the basis of § 645.32. The Secretary awards up to 30 additional points for prior experience.

(c) In selecting proposed projects for funding, the Secretary considers the need for the project in the area the applicant proposes to serve as compared to the need in areas other applicants propose to serve.

(20 U.S.C. 1070d, 1070d-1a)

§ 645.31 Selection criteria the Secretary uses.

The Secretary uses the following criteria—in paragraphs (a) through (h)—to evaluate applications for new awards

(a) *Plan of operation.* (10 points)

(1) The Secretary reviews each application for information that shows the quality of the plan of operation for the project.

(2) The Secretary looks for information that shows—

(i) High quality in the design of the project;

(ii) An effective plan of management that ensures proper and efficient administration of the project;

(iii) A clear description of how the objectives of the project relate to the purpose of the program;

(iv) The way the applicant plans to use its resources and personnel to achieve each objective; and

(v) A clear description of how the applicant will provide equal access and treatment for eligible project participants who are members of groups that have been traditionally underrepresented, such as—

(A) Members of racial or ethnic minority groups;

(B) Women; and

(C) Handicapped persons.

(b) *Quality of key personnel.* (10 points)

(1) The Secretary reviews each application for information that shows the qualifications of the key personnel the applicant plans to use on the project.

(2) The Secretary looks for information that shows—

(i) The qualifications of the project director;

(ii) The qualifications of each of the other key personnel to be used in the project;

(iii) The time that each person referred to in paragraphs (b)(2)(i) and (ii) of this section plans to commit to the project; and

(iv) The extent to which the applicant, as part of its nondiscriminatory employment practices, encourages applications for employment from persons who are members of groups that have been traditionally underrepresented, such as—

(A) Members of racial or ethnic minority groups;

(B) Women;

(C) Handicapped persons; and

(D) The elderly.

(3) To determine the qualifications of a person, the Secretary considers evidence of past experience and training, in fields related to the objectives of the project, as well as other information that the applicant provides.

(c) *Budget and cost effectiveness.* (5 points)

(1) The Secretary reviews each application for information that shows that the project has an adequate budget and is cost effective.

(2) The Secretary looks for information that shows—

(i) The budget for the project is adequate to support the project activities; and

(ii) Costs are reasonable in relation to the objectives of the project.

(d) *Evaluation plan.* (10 points)

(1) The Secretary reviews each application for information that shows

the quality of the evaluation plan for the project.

(2) The Secretary looks for information that shows methods of evaluation that are appropriate for the project and, to the extent possible, are objective and produce data that are quantifiable.

(e) *Adequacy of resources.* (5 points)

(1) The Secretary reviews each application for information that shows that the applicant plans to devote adequate resources to the project.

(2) The Secretary looks for information that shows—

(i) The facilities that the applicant plans to use are adequate; and

(ii) The equipment and supplies that the applicant plans to use are adequate.

(f) *Need for the project.* (25 points)

(1) The Secretary reviews each application for information that shows that a need for an Upward Bound project exists in the area the applicant plans to serve.

(2) The Secretary looks for information that shows—

(i) The extent to which the percentage of low-income families residing in the geographically defined target area exceeds 20 percent;

(ii) The number and percentage of individuals who are eligible to be served by an Upward Bound project who reside in the target area or attend target schools, and their grade levels; and

(iii) The extent to which the target area lacks the services and activities that are provided by an Upward Bound project.

(3) To determine the extent of the need for a project, the Secretary also considers—

(i) The number of students enrolled in target schools who are from low-income families;

(ii) The number and percentage of those students who subsequently enroll in postsecondary education;

(iii) In the target schools, the ratio of students to counselors;

(iv) The dropout rate of students from the target schools; and

(v) For veterans' projects only, the number of veterans in the target area who are eligible for and need Upward Bound services.

(g) *Likelihood of success.* (20 points)

(1) The Secretary reviews each application for information that shows the likelihood of success.

(2) The Secretary looks for information that shows—

(i) The extent to which the project is likely through the academic year and summer components or through the veterans' project, to—

(A) Generate academic skills and motivation that will enable the participants to gain admission to postsecondary institutions; and

(B) Enable the participants to attain through the proposed project design those academic skills—such as reading, writing, mathematics, and science—essential for postsecondary education and in which participants are deficient; and

(ii) The comprehensiveness of the applicant's plan for providing the activities and services listed in—

(A) Sections 645.10, 645.11, and 645.12 if the application is for a regular Upward Bound project; and

(B) Sections 645.10(c) and 645.13 if the application is for an Upward Bound Veterans project; and

(C) Section 645.14 if the application includes an educational component for participants of limited proficiency in English, in addition to a regular Upward Bound project or an Upward Bound Veterans project.

(h) *Resources and organization.* (15 points)

(1) The Secretary reviews each application for information that shows that the applicant plans to devote adequate resources and organization to the project.

(2) The Secretary looks for information that shows—

(i) The extent to which the applicant plans to publicize and orient residents of the target area, target schools, and the institutional community to the goals and objectives of the Upward Bound program; and

(ii) The extent to which the applicant has provided for the use of community and other resources to supplement authorized activities.

(20 U.S.C. 1221e-3(a)(1); 1070d, 1070d-1a)

§ 645.32 Prior experience.

For each applicant that has conducted an Upward Bound project within the previous three years, the Secretary—

(a) Reviews materials and documents, such as performance reports, evaluation reports, and site visit reports, for information that shows that the applicant has successfully carried out an Upward Bound project during that time;

(b) Looks for information that shows the extent of the applicant's success in meeting the performance standards listed in § 645.43; and

(c) Awards up to 30 additional points for this criterion.

(20 U.S.C. 1070d, 1070d-1a)

Subpart E—What Conditions Must be Met by a Grantee?

§ 645.40 Allowable costs.

Allowable project costs may include the following costs reasonably related to carrying out an Upward Bound project:

(a) In-service training of project staff if approved by the Secretary.

(b) The rental of space if space is not available at the host institution(s) and the space rented is not owned by the host institution(s).

(c)(1) Room and board expenses for Upward Bound participants for a summer residential component—computed on a weekly basis—if the weekly rate charged the Upward Bound project does not exceed the weekly rate the host institution charges regularly enrolled students at the institution for the summer session.

(2) If the host institution does not have a summer session operating at the some time as the Upward Bound project, the room and board rate—computed on a weekly basis—may be no higher than the rate the institution charges its regularly enrolled students during the academic year.

(d) Room and board for those persons responsible for dormitory supervision of participants during a residential summer component.

(e) Meal expenses for Upward Bound participants in a nonresidential summer component.

(f) Transportation, meals, and overnight accommodations for staff members when they are required to accompany participants in project activities, such as field trips, that are specifically approved by the Secretary in writing and in advance of those trips.

(g) Student activities fees.

(h) Admission fees to educational activities, museums, and other events that have as their purpose the intellectual, social, and cultural development of participants.

(i) Entertainment costs for one project-sponsored banquet or ceremony.

(j) Tuition costs for college credit courses at the host institution for participants in the Bridge Summer Component.

(k)(1) Accident insurance to cover any injuries to project participants while participating in a project activity; and

(2) Medical insurance for the project participant while participating full-time in the summer component.

(l) Courses in English language instruction for participants with limited proficiency in English if these classes are limited to project participants and if these classes are not otherwise available in the target area.

(m) Educational field trips to places in resonable proximity to the project's location.

(n) Transportation costs of participants for regularly scheduled project activities.

(o)(1) Transportation costs for project-scheduled visits to the campus of the host institution by parents, foster parents, or legal guardians of participants; and

(2) Overnight accommodation costs for these persons if necessary because of the distance between their home and the campus.

(20 U.S.C. 1070d, 1070d-1a)

§ 645.41 Nonallowable costs.

Costs that may not be charged against a grant under this program include the following:

(a) The duplicaton of services that are available to participants through—

(1) State, local, or private sources;

(2) The institution or agency sponsoring the project; or

(3) Other Federal programs.

(b) Research not directly related to the evaluation or improvement of the project.

(c) The purchase of any equipment, unless the grantee demonstrates to the Secretary's satisfaction that purchase is less expensive than renting.

(d) Meals for staff except as provided in § 645.40(d) and (f).

(e) Clothing.

(f) Room and board for administrative and instructional staff personnel who do not have responsibility for dormitory supervision of projects participants during a residential summer component unless these costs are approved by the Secretary.

(g) Room and board for participants in Upward Bound Veterans projects.

(h) The construction, renovation, or remodeling of any facilities.

(i) Tuition, stipends, or any other form of student financial support for project staff.

(j) Stipends for veterans.

(20 U.S.C. 1070d, 1070d-1a)

§ 645.42 Stipends.

For all participants who participate on an essentially full-time basis, an Upward Bound project shall provide stipends as follows:

(a) *Academic year component.*

(1) The stipend shall not exceed $40 per month during the academic year component.

(2) The grantee shall prorate the amount of the stipend according to the number of scheduled sessions in which the student participated during the month.

(b) *Summer component.*

(1) The stipend shall not exceed $15 per week during the summer component.

(2) In order to receive the stipend, the participant must show evidence of satisfactory participation in the project activities for the week, including—

(i) Regular attendance; and

(ii) Performance in accordance with standards established by the grantee and described in the application.

(20 U.S.C. 1070d. 1070d-1a)

§ 645.43 Performance standards [Reserved]

Note.—The Secretary will publish, as a separate Notice of Proposed Rulemaking, proposed performance standards.

Subpart F—What Are the Administrative responsibilities of a Grantee?

§ 645.50 Recordkeeping.

(a) A grantee shall keep records on the services provided to all participants and groups, including—

(1) Counseling activities, such as family contracts, career explorations, college visits, referrals, and assistance in course selections;

(2) Contacts with participants, services provided, measurements of progress, and reports that relate to the academic and other types of assistance provided the participants;

(3) Assistance to participants in applying for and gaining admission to postsecondary institutions; and

(4) Assistance to participants in applying for student financial aid.

(b) To document the progress of each participant, the grantee shall keep the following on file:

(1) The participant's name, age, sex, ethnic and racial background, telephone number, and permanent address.

(2) A medical consent form signed by the participant's parent or guardian.

(3) The information used to select the participant including—

(i) Documentation of the participant's eligibility to receive services;

(ii) Records of interviews; and

(iii) Copies of the participant's high school transcripts, aptitude and achievement test scores, interest inventories, and other diagnostic measures of the participant's academic strengths and weaknesses at the time of his or her entry into the project.

(4) An individualized plan of program support developed to improve the participant's skills.

(5) Documentation of follow-up on the participant, with particular emphasis on his or her postsecondary enrollment and status.

(6) Any recommendations made to the participant, on the completion of the project, regarding his or her educational and carreer potentials.

(7) The reasons for a participant's leaving the project if he or she left prior to enrollment in a postsecondary educational institution.

(c) Files for projects serving veterans shall include all of the records indicated in paragraphs (a) and (b) of this section other than the medical consent form required by §645.50(b)(2).

(20 U.S.C. 1070d, 1070d-1a)

[FR Doc. 80-40530 Filed 12-30-80; 8:45 am]
BILLING CODE 4000-01-M

Federal Register

Wednesday
December 31, 1980

Part XV

Department of Education

Training Program for Special Programs Staff and Leadership Personnel

DEPARTMENT OF EDUCATION

34 CFR Part 642

Training Program for Special Programs Staff and Leadership Personnel (Training Program)

AGENCY: Department of Education.

ACTION: Notice of proposed rulemaking.

SUMMARY: The Secretary proposes to adopt the regulations for the Training Program. The regulations are being adopted to reflect the statutory changes contained in the Education Amendments of 1980. The regulations will permit the funding of grants to meet the training needs of Special Programs Staff and Leadership Personnel.

DATES: Comments must be received on or before March 2, 1981.

Currently the Department of Education plans to hold public meetings in four cities. The tentative date for each meeting follows:

February 9, 1981—Washington, D.C.
February 11, 1981—Chicago, Illinois
February 17, 1981—San Francisco, California
February 19, 1981—Dallas, Texas

ADDRESSES: Comments should be addressed to Mary Kathleen Smith (Room 3514 ROB-3), Department of Education, 400 Maryland Avenue, SW, Washington, D.C. 20202.

The public will be advised—through a notice published in the Federal Register—of the time and specific location of each public meeting listed in the Dates section of this Preamble.

FOR FURTHER INFORMATION CONTACT: Mary Kathleen Smith, Telephone No. (202) 245-2511.

SUPPLEMENTARY INFORMATION: On January 12, 1978, the Commissioner of Education published in the Federal Register the proposed regulations for the Training Program for Special Programs Staff and Leadership Personnel. The Commissioner subsequently decided that program regulations were not necessary to govern the Training Program, which was then a contract program. As a result, no final regulations were published.

The Education Amendments of 1980 changed the Training Program from a contract program to a discretionary grant program. These proposed regulations reflect this change as well as the other statutory changes made by the Amendments.

In organizing these proposed regulations, the Secretary has followed the format of the Education Department General Administrative Regulations (EDGAR). These changes reflect the Secretary's concern that the regulations be easy to understand and follow. The proposed regulations for the Special Programs for Students from Disadvantaged Backgrounds, of which the Training Program is a part are made consistent with these format changes.

These proposed regulations incorporate by reference 34 CFR Parts 75 and 77 of EDGAR; therefore, the regulations do not repeat certain types of information and requirements which are found in EDGAR. However, the general selection criteria found in EDGAR (34 CFR Part 75.202 through 75.206) have been repeated in these regulations for the convenience of the applicant (Section 642.31 (a) through (e)).

The Education Amendments of 1980 require the Secretary, when making grants for the Training Program, to consider the prior experience of service delivery under the Training Program by each applicant. The Secretary proposes to make "prior experience" one of the selection criteria for this program. The public is invited to comment on this approach and on the weighting of that criterion as well as that of the other selection criteria.

The Secretary intends to base the evaluation of prior experience on published performance standards. These performance standards have not yet been developed. The public is invited to submit suggestions for performance standards at this time. The Secretary will develop performance standards at a later date and the public will have the opportunity to comment on the specific standards when they are published as proposed rules.

In order to meet the training needs of local areas, the Secretary has allowed for some flexibility in these proposed regulations. The Secretary proposes to announce in the application notice published in the Federal Register the kinds and scope of training, the training topics, and the categories of individuals to be trained in any year. The Secretary would establish these parameters after consultation with regional and State professional association personnel who have special knowledge of the training needs of Special Programs staff and leadership personnel.

Invitation to Comment

Interested persons are invited to submit comments and recommendations regarding these proposed regulations. Written comments and recommendations may be sent to the address given at the beginning of this preamble. All comments received on or before the 60th day after publication of this document will be considered in the development of the final regulations.

All comments submitted in response to these proposed regulations will be available for public inspection, during and after the comment period, in Room 3514, ROB-3, 7th and D Streets, SW, Washington, D.C., between the hours of 8:30 a.m. and 4:00 p.m., Monday through Friday of each week except Federal holidays.

Assessment of Educational Impact

The Department particularly requests comments on whether the proposed regulations in this document would require transmission of information that is already being gathered by or is available from any other agency or authority of the United States.

Citation of Legal Authority

A citation of statutory or other legal authority is placed in parentheses on the line following each substantive provision of these regulations.

(Catalog of Federal Domestic Assistance No. 84.103, Training Program for Special Programs Staff and Leadership Personel)

Dated: 23 December 1980.

Shirley M. Hufstedler,
Secretary of Education.

The Secretary proposes to add the new Part 642 to Title 34 of the Code of Federal Regulations to read as follows:

PART 642—TRAINING PROGRAM FOR SPECIAL PROGRAMS STAFF AND LEADERSHIP PERSONNEL

Subpart A—General

Sec.
642.1 Training program for special programs staff and leadership personnel.
642.2 Eligible grantees.
642.3 Eligible project participants.
642.4 Regulations that apply to the training program.
642.5 Definitions that apply to the training program.

Subpart B—What Kinds of Projects Does the Department of Education Assist Under This Program?

642.10 Kinds and scope of projects assisted under the training program.
642.11 Training program topics.
642.12 Consultation with regional and State professional associations.
642.13 Training activities and services.

Subpart C—How Does One Apply for a Grant?

642.20 How to apply for funds.

Subpart D—How Does the Secretary Make a Grant?

642.30 How the Secretary evaluates an application.
642.31 Selection criteria the Secretary uses.
642.32 Prior experience.
642.33 Geographic distribution.

Subpart E—What Conditions Must Be Met by a Grantee?

Sec.
642.40 Allowable costs.
642.41 Nonallowable costs.
642.42 Performance standards. [Reserved]

Subpart F—What Are the Administrative Responsibilities of a Grantee?

642.50 Recordkeeping.

Authority: Secs. 417A and 417F of Title IV of the Higher Education Act of 1965, as amended by Sec. 405, Pub. L. 96-374, 94 Stat. 1407-1411 and 94 Stat. 1504.

Subpart A—General

§ 642.1 Training program for special programs staff and leadership personnel.

The Training Program for Special Programs Staff and Leadership Personnel—referred to in these regulations as Training Program—provides Federal financial assistance for projects that improve—

(a) The skills of persons employed or preparing for employment in projects under the Special Programs for Students from Disadvantaged Backgrounds;

(b) The skills of staff and leadership personnel who are directly involved in the education of participants served by Special Programs projects; and

(c) The operation of Special Programs projects.

(20 U.S.C. 1070d, 1070d-1d)

§ 642.2 Eligible grantees.

(a) The following are eligible to apply for a grant to carry out a Training Program project:

(1) Institutions of higher education.

(2) Combinations of institutions of higher education.

(3) Public and nonprofit private agencies and organizations.

(b) Unless it is applying for a grant for a Training Program project that is national or inter-regional, an applicant may apply for a grant only for a project to serve the region or State, as applicable, in which the applicant is located.

(20 U.S.C. 1070d, 1070d-1d)

§ 642.3 Eligible project participants.

(a) The following are eligible for training under this program:

(1) Project directors and staff members of Special Programs projects who are employed to deliver services to participants in Special Programs projects.

(2) Staff and leadership personnel who are—

(i) Employed by institutions, agencies, or organizations that have been awarded grants to carry out a Special Programs project; and

(ii) Directly involved in the delivery of services to participants served by these Special Programs projects.

(3) Individuals who are preparing for employment as staff or leadership personnel in Special Programs projects.

(4) Other staff and leadership personnel who are directly involved in the education or participants served by Special Programs projects.

(b) Unless an individual is participating under this program in training that is national or inter-regional—

(1) The individual must be employed by or corrected with a Special Programs project in the State or region in which the Training Program project is conducted; or

(2) If the individual is preparing for employment in a Special Programs project, the individual must currently reside in the State or region in which the Training Program project is conducted.

(c)(1) The Secretary may each year select—from among the categories of persons listed in paragraph (a) of this section—the category or categories of persons eligible to receive training under this program during that year.

(2) The Secretary announces this selection in the application notice published in the Federal Register.

(20 U.S.C. 1070d, 1070d-1d)

§ 642.4 Regulations that apply to the training program.

The following regulations apply to the Training Program:

(a) The Education Department General Administrative Regulations (EDGAR) in 34 CFR Part 75 (Direct Grant Programs) and in 34 CFR Part 77 (General).

(b) The regulations in this Part 642.

(20 U.S.C. 1221e-3(a)(1))

§ 642.5 Definitions that apply to the training program.

(a) *Definitions in EDGAR.* The following terms used in this part are defined in 34 CFR Part 77:

Applicant	Nonprofit
Application	Private
Award	Project
Budget	Project period
EDGAR	Public
Equipment	Secondary school
Facilities	Secretary
Fiscal year	State
Grant	Supplies
Grantee	

(b) *Definitions that apply to this part.* The following definitions apply to this part:

"Act" means the Higher Education Act of 1965, as amended.

(20 U.S.C. 1001 et. seq.)

"Combination of institutions of higher education" means:

(1) A group of institutions of higher education that have entered into a cooperative arrangement to carry out a common objective; or

(2) A public or nonprofit private agency, organization, or institution designated or created by a group of institutions of higher education to carry out a common objective on their behalf.

(20 U.S.C. 1141(j))

"Institution of higher education" means an educational institution as defined in Sections 1201(a) and 481 of the Higher Education Act of 1965, as amended.

(20 U.S.C. 1141(a); 1088)

"Leadership personnel" are persons directing or providing services to individuals participating in Special Programs projects. These persons include—but are not limited to—teachers, trainers of teachers, counselors, secondary and postsecondary school administrators, supervisors, researchers, State Educational consultants, and school psychologists.

(20 U.S.C. 1070d, 1070d-1d)

"Region" means any one of the following 10 regions of the United States:

(1) Region I includes Connecticut, Maine, Massachusetts, New Hampshire, Rhode Island, Vermont.

(2) Region II includes New Jersey, New York, Puerto Rico, the Virgin Islands.

(3) Region III includes Delaware, Maryland, Pennsylvania, Virginia, District of Columbia.

(4) Region IV includes Alabama, Florida, Georgia, Kentucky, Mississippi, North Carolina, South Carolina, Tennessee.

(5) Region V includes Illinois, Indiana, Michigan, Minnesota, Ohio, Wisconsin.

(6) Region VI includes Arkansas, Louisiana, New Mexico, Oklahoma, Texas.

(7) Region VII includes Iowa, Kansas, Missouri, Nebraska.

(8) Region VIII includes Colorado, Montana, North Dakota, South Dakota, Utah, Wyoming.

(9) Region IX includes Arizona, California, Hawaii, Nevada, the Northern Mariana Islands, American Samoa, the Trust Territory of the Pacific Islands, Guam.

(10) Region X includes Alaska, Idaho, Oregon, Washington.

(20 U.S.C. 1070d, 1070d-1d)

Subpart B—What Kinds of Projects Does the Department of Education Assist Under This Program?

§ 642.10 Kinds and scope of projects assisted under the training program.

(a) Training Program projects may include—

(1) Conferences;

(2) Internships;

(3) Seminars; and

(4) Workshops.

(b) The scope of the Training Program projects may be—

(1) State;

(2) Regional;

(3) Inter-regional; or

(4) National.

(c)(1) The Secretary may each year select—from among the kinds and scope of training in paragraphs (a) and (b) of this section—the kinds and scope of training that may be considered for funding in that year.

(2) The Secretary announces this selection in the application notice of the Federal Register.

(20 U.S.C. 1070d, 1070d-1d)

§ 642.11 Training program topics.

(a) Training Program topics may include—

(1) Project evaluation;

(2) Recordkeeping, data collection, analysis, and dissemination;

(3) Assessments of the needs of a project, its staff, and its participants;

(4) Curricula design;

(5) Instructional models;

(6) Techniques of instruction;

(7) In-service training approaches and programs;

(8) Theories of counseling;

(9) Techniques of counseling;

(10) Career counseling;

(11) Tutorial theories;

(12) Tutorial models;

(13) Management skills;

(14) Program management;

(15) Staffing;

(16) Fiscal management and reporting;

(17) The relationship between the Special Programs project and the Department of Education;

(18) Tests and measurements;

(19) Orientation to other programs and projects that can supplement or complement a Special Programs project; and

(20) Techniques of coordination and referral.

(b)(1) The Secretary may each year select—from among the topics in paragraph (a) of this section—the specific topics of training that may be considered for funding in that year.

(2) The Secretary announces this selection in the application notice in the Federal Register.

(20 U.S.C. 1070d, 1070d-1d)

§ 642.12 Consultation with regional and State professional associations.

Before announcing the categories of personnel, kinds and scope of training, and training topics to be funded in any given fiscal year, the Secretary consults with persons of regional and State professional associations having special knowledge of the needs and problems of Special Programs projects and of the needs of persons working with participants of the Special Programs projects.

(20 U.S.C. 1070d, 1070d-1d)

§ 642.13 Training activities and services.

Each Training Program project must—

(a) Identify specific strengths, needs, and weaknesses of project participants in terms of their job or potential job in the Special Programs;

(b) If not otherwise available, design and develop training materials, methods, and programs to meet the identified needs;

(c) Provide training based on the materials, methods, and programs;

(d) Evaluate the effectiveness of the training materials, methods, and programs in meeting the needs of the participants. The evaluation should include follow-up on the participants;

(e) Assure that the project will cooperate with any followup studies of project participants conducted or authorized by the Secretary;

(f) Provide for the dissemination of the results of the project;

(g) Make available—to other Training Program projects and to Special Programs projects—materials, techniques, and results of the project;

(h) Engage a staff that is commensurate with the workload and time needed to carry out the training activities;

(i) Ensure that, during the project period, participants in the Training Progrma project are not used in research being conducted by project staff or other individuals; and

(j) Assure that training materials and content comply with the regulations and policies of the Special Programs.

(20 U.S.C. 1070d, 1070d-1d)

Subpart C—How Does One Apply for a Grant?

§ 642.20 How to apply for funds.

To apply for a new grant, an applicant shall follow the procedures and meet the requirements contained in EDGAR, 34 CFR Part 75, Subpart C.

(20 U.S.C. 1221e-3(a)(1); 1070d, 1070d-1d)

Subpart D—How Does the Secretary Make a Grant?

§ 642.30 How the Secretary evaluates an application.

(a) The Secretary evaluates an application on the basis of the criteria in § 642.31.

(1) The Secretary awards up to 100 points for these criteria.

(2) The maximum possible score for each complete criterion is indicated in the parentheses next to the heading of that criterion.

(b) In addition, for applicants that have conducted a Training Program project within the previous three years, the Secretary considers the prior experience of the applicant as indicated in § 642.32. The Secretary awards up to 30 additional points for prior experience.

(20 U.S.C. 1070d, 1070d-1d)

§ 642.31 Selection criteria the Secretary uses.

The Secretary uses the following criteria—in paragraphs (a) through (j)—to evaluate applications for new awards:

(a) *Plan of operation.* (10 points)

(1) The Secretary reviews each application for information that shows the quality of the plan of operation for this project.

(2) The Secretary looks for information that shows—

(i) High quality in the design of the project;

(ii) An effective plan of management that insures proper and efficient administration of the project;

(iii) A clear description of how the objectives of the project relate to the purpose of the program;

(iv) The way the applicant plans to use its resources and personnel to achieve each objective; and

(v) A clear description of how the applicant will provide equal access and treatment for eligible project participants who are members of groups that have been traditionally underrepresented, such as—

(A) Members of racial or ethnic minority groups;

(B) Women; and

(C) Handicapped persons.

(b) *Quality of key personnel.* (10 points)

(1) The Secretary reviews each application for information that shows the qualifications of the key personnel the applicant plans to use on the project.

(2) The Secretary looks for information that shows—

(i) The qualifications of the project director;

(ii) The qualifications of each of the other key personnel to be used in the project;

(iii) The time that each person referred to in paragraphs (b)(2)(i) and (ii) of this section plans to commit to the project; and

(iv) The extent to which the applicant, as part of its nondiscriminatory employment practices, encourages applications for employment from persons who are members of groups that have been traditionally underrepresented, such as—

(A) Members of racial or ethnic groups;

(B) Women;

(C) Handicapped persons; and

(D) The elderly.

(3) To determine the qualifications of a person, the Secretary considers evidence of past experience and training in fields related to the objectives of the project, as well as other information that the applicant provides.

(c) *Budget and cost effectiveness.* (5 points)

(1) The Secretary reviews each application for information that shows that the project has an adequate budget and is cost effective.

(2) The Secretary looks for information that shows—

(i) The budget for the project is adequate to support the project activities; and

(ii) Costs are reasonable in relation to the objectives of the project.

(d) *Evaluation plan.* (10 points)

(1) The Secretary reviews each application for information that shows the quality of the evaluation plan for the project.

(2) The Secretary looks for information that shows methods of evaluation that are appropriate for the project and, to the extent possible, are objective and produce data that are quantifiable.

(e) *Adequacy of resources.* (10 points)

(1) The Secretary reviews each application for information that shows that the applicant plans to devote adequate resources to the project.

(2) The Secretary looks for information that shows—

(i) The facilities that the applicant plans to use are adequate; and

(ii) The equipment and supplies that the applicant plans to use are adequate.

(f) *Project design.* (10 points)

(1) The Secretary reviews each application for information that shows the quality of the project design.

(2) The Secretary looks for information that shows—

(i) The extent to which the techniques are designed specifically to enable project participants to better meet the needs of those served by the Special Programs;

(ii) The extent to which the training objectives are—

(A) Clear and specific;

(B) Measurable; and

(C) Related to the duties and responsibilities of the training participants;

(iii) The extent to which provision is made for making materials, techniques, and results of the project available to Special Programs projects and to other Training Program projects; and

(iv) The comprehensiveness of the applicant's plan for providing the activities and services required by § 642.13.

(g) *Benefit and impact.* (10 points)

(1) The Secretary reviews each application for information that shows that the training will benefit the participants and affect those served by the Special Programs.

(2) The Secretary looks for information that shows—

(i) The extent to which the training will increase the qualifications and skills of staff and leadership personnel who are employed in or are preparing for employment in the Special Programs;

(ii) The extent to which the training will increase the participants' knowledge and understanding of the objectives of the Special Programs and of the ways of meeting the needs of disadvantaged students;

(iii) The extent to which the training will improve the operation of Special Programs projects; and

(iv) The extent to which the training will complement and not duplicate the training efforts of the Department of Education.

(h) *Commitment.* (10 points)

(1) The Secretary reviews each application for information that shows that the applicant is committed to the education of disadvantaged students in general and to the project's objectives in particular.

(2) To determine the extent of commitment, the Secretary considers—

(i) Relevant excerpts from official documents, such as course catalogs and the applicant's charter, constitution, and by-laws, which stipulate that the applicant is committed to the education of disadvantaged students and to the training project's objectives; and

(ii) Efforts by the applicant to improve the educational opportunities of disadvantaged students and its accomplishments in this area.

(i) *Need.* (15 points)

(1) The Secretary reviews each application for information that shows a need for a Training Program project.

(2) The Secretary looks for information that shows the extent to which the project addresses a specific need for training not addressed by other training projects available to the training participants.

(j) *Staff and consultants.* (10 points)

(1) The Secretary reviews each application to determine the quality and diversity of the staff and consultants that the applicant plans to use.

(2) The Secretary looks for information that shows—

(i) The quality of the applicant's plan to recruit and employ a diverse group of qualified staff and consultants who reflect the ethnic and racial diversity of the training participants and projects to be involved in the training; and

(ii) The extent to which the applicant will recruit and employ staff and consultants who are knowledgeable of the Special Programs and of the needs of disadvantaged students served in the Special Programs.

(20 U.S.C. 1221e-3(a)(1); 1070d, 1070d-1d)

§ 642.32 Prior experience.

For each applicant that has conducted a Training Program project within the previous three years, the Secretary—

(a) Reviews materials and documents, such as performance reports, evaluation reports, and site visit reports, for information that shows that the applicant has successfully carried out a Training Program project during that time;

(b) Looks for information that shows the extent of the applicant's success in meeting the performance standards listed in § 642.42; and

(c) Awards up to 30 additional points for this criterion.

(20 U.S.C. 1070d, 1070d-1d)

§ 642.33 Geographic distribution.

Except when making grants that are national or interregional in scope, the Secretary funds one Training Program grant per region before funding additional grants in any regional if—

(a) There are sufficient funds to permit the funding of at least 10 grants;

(b) There is an eligible application from the region; and

(c) There is a need for a Training Program project in the region.

(20 U.S.C. 1070d, 1070d-1d)

Subpart E—What Conditions Must Be Met by a Grantee?

§ 642.40 Allowable costs.

Allowable project costs may include the following costs reasonably related to carrying out a Training Program project:

(a) Rental of space, if space is not available at the sponsoring institution

and if the space is not owned by the sponsoring institution.

(b) Printing.

(c) Postage.

(d) Purchase or rental of equipment if approved in writing by the Secretary.

(e) Consumable supplies

(f) Transportation costs for participants, staff, and consultants.

(g) Lodging and subsistence costs for participants, staff, and consultants.

(h) Fees for consultants.

(i) Honorariums for keynote speakers.

(j) Other costs that are specifically approved in advance and in writing by the Secretary.

(20 U.S.C. 1070d, 1070d-1d)

§ 642.41 Nonallowable costs.

Costs that may not be charged against a grant under this program include the following:

(a) Research not directly related to the evaluation or improvement of the project.

(b) The construction, renovation, or remodeling of any facilities.

(c) Stipends, tuition fees, and other direct financial assistance to trainees other than those participating in internships.

(20 U.S.C. 1070d, 1070d-1d)

§ 642.42 Performance standards. [Reserved]

[The Secretary will publish a separate notice of proposed rulemaking proposed performance standards.]

Subpart F—What Are the Administrative Responsibilities of a Grantee?

§ 642.50 Recordkeeping.

Each project shall maintain records of project activities and services. The records shall include—

(a) The number of training sessions;

(b) The number of participants attending each session;

(c) The number of consultants used at each session;

(d) The ethnic and racial distribution of participants;

(e) The ethnic and racial distribution of staff and consultants;

(f) The distribution of participants by types of Special Programs projects;

(g) The materials provided to the participants; and

(h) The evaluations, including participant evaluations, of each training session.

(20 U.S.C. 1070d, 1070d-1d)

[FR Doc. 80-40529 Filed 12-30-80; 8:45 am]

BILLING CODE 4000-01-M

Federal Register

Wednesday
December 31, 1980

Part XVI

Department of Education

National Graduate Fellows Program

DEPARTMENT OF EDUCATION

34 CFR Part 650

National Graduate Fellows Program

AGENCY: Department of Education.

ACTION: Notice of proposed rulemaking.

SUMMARY: The Secretary is issuing proposed regulations for the National Graduate Fellows Program. The purpose of these regulations is to implement Title IX, Part C of the Higher Education Act of 1965, as amended by the Education Amendments of 1980. These regulations specify how an individual applies for a fellowship and what conditions must be met by a fellow for continued eligibility. In addition, these regulations describe the responsibilities of the National Graduate Fellowship Program Board (the Fellowship Board).

DATES: Interested persons are invited to submit comments, suggestions, or objections regarding the proposed regulations on or before March 2, 1981.

ADDRESSES: Comments should be addressed to: Donald N. Bigelow, Chief, Graduate Training Branch, Division of Training and Facilities, (Room 3060, ROB-3), 400 Maryland Avenue SW., Washington, D.C. 20202.

FOR FURTHER INFORMATION CONTACT: Donald N. Bigelow, telephone: (202) 245-2347.

SUPPLEMENTARY INFORMATION: The National Graduate Fellow Program is a new program authorized under Title IX, Part C, of the Higher Education Act, as amended. The statute provides for fellowships to be awarded directly to students to study at the doctoral level in selected fields of the arts, humanities, and social sciences. Many of the responsibilities under this program regarding procedures and criteria for selection of fellows and general policies for the program and are vested in the Fellowship Board. The Board is composed of individual representatives of both public and private institutions of higher education appointed by the President. These proposed regulations do not address matters that will have to be addressed by the Fellowship Board.

Invitation to Comment

Interested persons are invited to submit comments and recommendations regarding these proposed regulations. They are also invited to make suggestions on matters to be decided by the Fellowship Board, including general policies for the program, the fields in which fellowships are to be awarded, the number of fellowships in each designated field, and the criteria for selection of fellows.

Written comments and recommendations may be sent to the address given at the beginning of this preamble. All comments received on or before the 60th day after publication of this document will be considered in the development of the final regulations.

All comments submitted in response to these proposed regulations will be available for public inspection, during and after the comment period, in Room 3060, ROB#3, 7th and D Streets SW., Washington, D.C. between the hours of 8:30 a.m. and 4:00 p.m., Monday through Friday of each week, except Federal holidays.

The Department particularly requests comments on whether the proposed regulations in this document would require the submission of information that is already being gathered by or is available for any other agency or authority of the United States

Citation of Legal Authority

A citation of statutory or other legal authority is placed in parentheses on the line following each substantive provision of these regulations.

Dated: December 23, 1980.

(Catalog of Federal Domestic Assistance number has not been assigned)

Shirley M. Hufstedler,

Secretary of Education.

The Secretary proposes to amend Part 650 of Title 34 of the Code of Federal Regulations to read as follows:

PART 650—NATIONAL GRADUATE FELLOWS PROGRAM

Subpart A—General

Sec.
650.1 National Graduate Fellows Program.
650.2 Eligible parties.
650.3 Definitions.

Subpart B—How Does an Individual Apply for a Fellowship?

650.10 How to apply for funds.

Subpart C—How are Fellows Selected?

650.20 Procedures for selection.
650.21 Selection criteria.

Subpart D—What Conditions Have to be Met by Fellows?

650.30 Where fellows may study.
650.31 Tenure of fellowship.
650.32 Fellowship conditions.
650.33 Interruption of tenure.
650.34 Change in award.

Subpart E—What are the Administrative Responsibilities of the Institution?

650.40 Amount of fellowship.
650.41 Records and reports.

Authority: Part C of Title IX of the Higher Education Act, as amended by Pub. L. 96-374 (94 Stat. 1367, 1487; 20 U.S.C. 1134h-1134k).

Subpart A—General

§ 650.1 National Graduate Fellows Program.

The Secretary may award up to 450 competitive fellowships annually for study at the doctoral level in selected fields of the arts, humanities, and social sciences.

(20 U.S.C. 1134h(a); H. Conf. Rept. 96-1337 at 194)

§ 650.2 Eligible parties.

(a) Fellowships are awarded only to students of superior ability selected on the basis of demonstrated achievement and exceptional promise, as measured by their academic record, recommendations regarding their qualifications, and other evidence.

(b) At the time of application, a student may not have begun graduate study in the field for which application is made but shall be eligible to begin graduate study not later than the next academic year.

(c) An eligible student shall be a national of the United States or reside in the United States for other than a temporary purpose and intend to become a permanent resident or be a permanent resident of the Trust Territory of the Pacific Islands or the Northern Mariana Islands.

§ 650.3 Definitions.

The following definitions apply to this Part:

"Act" means the Higher Education Act of 1965, as amended.

"Fellow" means a fellowship recipient.

"Fellowship" means an award made to a person for graduate study under Title IX-C of the Act.

"Fellowship Board" means the National Graduate Fellowship Program Board composed of individual representatives of both public and private institutions of higher education appointed by the President to establish general policies for the program and oversee its operation.

"Secretary" means the Secretary of Education, or designee.

"Stipend" means the amount paid to an individual awarded a fellowship, including an allowance for subsistence and other expenses for the individual and his or her dependents, not to exceed the fellow's demonstrated level of need.

(20 U.S.C. 1134k)

Subpart B—How does an Individual Apply for a Fellowship?

§ 650.10 How to apply for funds.

Students apply directly to the Secretary for a fellowship award in

response to an application notice and in accordance with forms and instructions provided by the Secretary.

(20 U.S.C. 1134h)

Subpart C—How are Fellows Selected?

§ 650.20 Procedures for selection.

The Board annually selects fields in which fellowships are to be awarded, determines the number of fellowships in each field, and appoints distinguished panels to select the fellows in each field.

(20 U.S.C. 1134i(a)(2))

§ 650.21 Selection criteria.

The Board establishes criteria for selection of fellows.

Subpart D—What Conditions Have to be Met by Fellows?

§ 650.30 Where fellows may study.

Each fellow is entitled to use the fellowship in a doctoral program at any accredited institution of higher education to which the recipient applies and is accepted for graduate study.

(20 U.S.C. 1134i(c))

§ 650.31 Tenure of fellowship.

An individual may receive a fellowship under this program for up to 48 months. Each award is for a period of one year and is subject to renewal within the 48 month period.

(20 U.S.C. 1134h(a))

§ 650.32 Fellowship conditions.

In order to continue to receive payments under a fellowship, a fellow must:

(a) Maintain satisfactory progress as determined by the institution of higher education at which the fellow is enrolled;

(b) Devote essentially full time to study or research in the field in which the fellowship was awarded; and

(c) Not engage in gainful employment during the period of the fellowship, except on a part-time basis in teaching, research, or similar activities approved by the Secretary.

(20 U.S.C. 1134k(a))

§ 650.33 Interruption of tenure.

(a) A fellow may take a leave of absence for a period of up to 12 months for the purpose of work, travel, or independent study away from the campus if:

(1) The leave of absence is approved by the institution at which the fellow is enrolled and by the Secretary; and

(2) The work, travel, or independent study is supportive of the fellow's academic program.

(b) The Secretary makes no payemnts to the fellow or the institution during this period.

(20 U.S.C. 1134h(b))

§ 650.34 Change in award.

After an award is made, any change in the field of study or institution requires prior approval by the Secretary.

(20 U.S.C. 1134h)

Subpart E—What are the Administrative Responsibilities of the Institution?

§ 650.40 Amount of fellowship.

(a) The Secretary establishes a maximum stipend level, institutional allowance, and payment procedures.

(b) The amount of the fellowship will be determined according to the fellow's demonstrated financial need. With the advice of the Board, the Secretary develops and publishes appropriate measures and procedures to determine financial need.

(20 U.S.C. 1134j(b))

§ 650.41 Records and reports.

(a) Each individual who is awarded a fellowship shall keep such records and submit such reports as are required by the Secretary.

(b) Such reports shall include a certification from an appropriate official at the institution of higher education, library, archive, or other research center approved by the Secretary, stating that the fellow is making satisfactory progress in and is devoting essentially full time to the program for which the fellowship was awarded.

(c) Such certification from the institution of higher education must indicate that the fellow is not engaging in gainful employment other than part-time employment (approved by the institution) in teaching, research, or similar activities.

(20 U.S.C. 1134k(b))

[FR Doc. 80-40528 Filed 12-30-80; 8:45 am]
BILLING CODE 4000-01-M

Federal Register

Wednesday
December 31, 1980

Part XVII

Department of Education

Cooperative Education Program

DEPARTMENT OF EDUCATION

34 CFR Parts 631, 632, 633, 634, and 635

Cooperative Education Program

AGENCY: Department of Education.

ACTION: Notice of proposed rulemaking.

SUMMARY: The Secretary proposes to amend the regulations for the Cooperative Education Program. The regulations are being amended to reflect the statutory changes contained in the Education Amendments of 1980. The regulations establish uniformity in the administration of projects conducted with grants under the Cooperative Education Program. They also define terms and establish minimum requirements. The criteria place emphases on the priorities contained in each part to indicate the emphasis of the various types of projects. The regulations are divided into five parts: A general part containing provisions common to the several components of the Cooperative Education Program, and separate parts containing provisions specific to each component.

DATES: Comments must be received on or before February 17, 1981.

ADDRESSES: Comments should be addressed to Ms. Barbara W. Freeman, Cooperative Education Program, U.S. Department of Education (Room 3053 ROB-3), 400 Maryland Avenue, SW., Washington, D.C. 20202.

FOR FURTHER INFORMATION CONTACT: Barbara W. Freeman. Telephone: (202) 245-2146.

SUPPLEMENTARY INFORMATION: Administration grants are awarded to institutions of higher education and combinations of institutions of higher education. The purpose of these grants is to enable grantees to enrich the quality of postsecondary education by providing educationally related off-campus work experiences for their students. These work experiences offer students opportunities to become better prepared to achieve their educational or career objectives, as well as opportunities to earn funds needed for their educational pursuits. Grantees may carry out projects that provide for either or both alternating or parallel periods of academic study and public or private employment. Thus, projects carried out under these grants bring education, business, and industry into direct cooperation to develop an educated and trained labor force.

Demonstration grants are awarded to institutions of higher education, combinations of institutions of higher education, and, in certain circumstances, public and private nonprofit agencies and organizations. The purpose of the grants is to help recipients demonstrate or explore the feasibility or value of Cooperative Education. Demonstration grants are awarded primarily for the development and operation of comprehensive Cooperative Education projects. These projects involve structured linkages between institutions of postsecondary education and a variety of employers to create long-term resources for and commitments to Cooperative Education. Projects carried out under these grants emphasize the relationship between academic study and the world of work.

Demonstration grants may also be awarded to support Cooperative Education—

For special populations, such as the handicapped;

In isolated locations;

In international locations; and

To make cooperative education available throughout an educational program, including graduate or professional training.

Research grants are awarded to institutions of higher education, combinations of institutions of higher education, and public and nonprofit private agencies and organizations. Research grants are awarded for studies that have broad implications and application to the larger Cooperative Education community rather than to the immediate needs of an individual institution. Grants may be awarded for but not limited to—

Experimental or developmental research;

Cost-benefit studies;

Testing methods of evaluating work experiences in academic curricula; or

Research specific to the needs of varied student populations served in Cooperative Education projects.

Training grants are awarded to institutions of higher education, combinations of institutions of higher education, and public and nonprofit private agencies and organizations. Training grants are awarded to provide a specialized experience for a carefully selected group of individuals who currently participate, or are interested in participating, in the administration of Cooperative Education projects. These participants may include—

Directors or coordinators of Cooperative Education projects;

Chief administrators and faculty of institutions of postsecondary education;

Employers or prospective employers of students in Cooperative Education;

Guidance and counseling personnel in secondary and postsecondary schools; and

Members of professional or scholarly organizations.

Grantees offer training to meet the needs of various participants—from those persons new to the concept of Cooperative Education to those with years of experience who wish to expand their efforts to have a greater influence on their institutions or organization to foster the goals of Cooperative Education.

Invitation to Comment

Interested persons are invited to submit comments and recommendations regarding the proposed regulations. Written comments and recommendations may be sent to the address given at the beginning of this preamble. All comments received on or before February 17, 1981 will be considered in the development of the final regulations.

All comments submitted in response to these proposed regulations will be available for public inspection, during and after the comment period, in Room 3053 ROB-3, 7th and D Streets, SW, Washington, D.C., between the hours of 8:30 and 4:00 p.m., Monday through Friday of each week, except Federal Holidays.

Assessment of Educational Impact

The Department particularly requests comments on whether the proposed regulations in this document would require transmission of information that is already being gathered by or is available from any other agency or authority of the United States.

Citation of Legal Authority

A citation of statutory or other legal authority is placed in parentheses on the line following each substantive provision of these regulations.

Dated: December 23, 1980.

Shirley M. Hufstedler,

Secretary of Education.

(Catalog of Federal Domestic Assistance No. 84.055, Cooperative Education Program; 84.055A, Cooperative Education—Administration; 84.055B, Cooperative Education—Demonstration; 84.055C, Cooperative Education—Research; 84.055D, Cooperative Education—Training)

The Secretary proposes the following regulations to govern the administration of the Cooperative Education Program.

Part 631 is revised to read as follows:

PART 631—COOPERATIVE EDUCATION PROGRAM

Subpart A—General

Sec.
631.1 The Cooperative Education Program.
631.2 Regulations that apply to the Cooperative Education Program.
631.3 Definitions that apply to the Cooperative Education Program.

Subpart B—Projects the Department of Education Assists Under this Program

631.10 Administrative projects.
631.11 Demonstration projects.
631.12 Research projects.
631.13 Training projects.

Subpart C—How to Apply for a Grant

631.20 Limitation on number of applications.
631.21 Applications from combinations of institutions of higher education.
631.22 Application information.

Subpart D—How the Secretary Makes a Grant

631.30 Evaluation of applications from combination of institutions of higher education.
631.31 How the Secretary makes a grant.
631.32 Selection criteria the Secretary uses.
631.33 Minimal acceptable score.

Subpart E—What Conditions Must Be Met by a Grantee?

631.40 Status of project director.
631.41 Allowable costs.
631.42 Unallowable costs.
631.43 Coordination with other Federal programs.
631.44 Evaluation by grantee.

Authority: Title VIII of the Higher Education Act of 1965, as amended, Pub. L. 96-374 (20 U.S.C. 1133-1133b), unless otherwise noted.

Subpart A—General

§ 631.1 The Cooperative Education Program.

The Cooperative Education Program has four distinctive components: administration, demonstration, research, and training. The goal of each component is to ensure that institutions of higher education are assisted in providing students an opportunity to gain career exposure in work experiences closely related to their academic and career pursuits.

The four components are administered in accordance with this part, as well as the following parts:

34 CFR Part 632—Cooperative Education—Administration

34 CFR Part 633—Cooperative Education—Demonstration

34 CFR Part 634—Cooperative Education—Research

34 CFR Part 635—Cooperative Education—Training

(20 U.S.C. 1133)

§ 631.2 Regulations that apply to the Cooperative Education Program.

The following regulations apply to the Cooperative Education Program:

(a) The Education Department General Administrative Regulations (EDGAR) in 34 CFR Part 75 (Direct Grant Programs) and 34 CFR Part 77 (General).

(b) The regulations in this Part 631, and in 34 CFR Parts 632, 633, 634, and 635.

(20 U.S.C. 1221-3(a)(1), 1133)

§ 631.3 Definitions that apply to the Cooperative Education Program.

(a) Definitions in EDGAR. The following terms used in 34 CFR Parts 631 through 635 are defined in 34 CFR Part 77.

Applicant.	Nonprofit.
Application.	Private.
Contract.	Project.
Equipment.	Secretary.
Grant.	State.
Grantee.	

(b) *Definitions that apply to the program components.*

The following definitions apply to terms used in 34 CFR Parts 631 through 635.

"Acts" means Title VIII of the Higher Education Act of 1965, as amended.

"Alternating periods of study and employment" means a program at an institution in which a student engaged in rotating periods of classroom study and supervised employment in a valid Cooperative Education project, each period lasting for at least a quarter or semester term.

"Additive credit" means the credit earned at an institution of higher education for the work experience is in addition to the credits required for the academic work to earn a degree.

"Combination of institutions of higher education" means a group of institutions of higher education, as defined in Section 1201(a) of the Higher Education Act of 1965, as amended, that has entered into a cooperative arrangement for the purpose of carrying out a common objective.

"Comprehensive Cooperative Education project" means a Cooperative Education project in an institution of higher education that—

(1) Involves all or nearly all academic disciplines or major units of the institution;

(2) Serves a student population that is diverse by reason of age, sex, ethnic or racial background, or physical ability;

(3) Offers alternating or parallel periods of study and employment with a variety of employers;

(4) Acts as a liaison between selected feeder high schools and the institution's admissions office to apprise high school students of the availability and advantages of Cooperative Education; and

(5) Plans to institutionalize Cooperative Education into the academic and administrative practices and policies of the institution.

"Cooperative education" means an educational approach that provides planned alternating or parallel periods of classroom study and supervised public or private employment in which—

(1) There is a written training agreement between the institution of higher education, student, and employee;

(2) The work experience is related to a student's academic study or career goals;

(3) The rotation between academic study and work is planned and supervised to further the student's education and employability; and

(4) Students are employed and compensated in conformity with Federal, State, and local laws.

"Experiential learning" means the acquisition of knowledge, skill, or practice by direct observation of or participation in activities.

"Extended day" means the pursuit of academic study in addition to full or part-time employment in a job not acquired through the auspices and control of a Cooperative Education project.

"Institution of higher education" means an institution of higher education as defined in Section 1201(a) of the Higher Education Act of 1965, as amended.

"Internship" means a one-time work experience in an assignment—

(1) That is related to a student's academic or career goals; and

(2) For which a student may or may not receive compensation.

"Nonadditive credit" means the credit earned at an institution of higher education for the work experience is included in the credits awarded for the academic work to earn a degree.

"Parallel periods of study and employment" means a program at an institution in which a student engages in both classroom study and supervised employment, with the study and employment having nearly equal significance during the course of the school day or the school week.

"Student" means a person—

(1) Enrolled in a postsecondary institution other than by correspondence;

(2) Enrolled in a degree program of not less than two years; and

(3) Carrying at least half the academic workload normally required of persons who are full-time degree candidates.

"Unit of an institution of higher education" means the organizational entity that has the final, noncentral administrative authority to recommend or administer the requirements, standards, and credits necessary to earn degrees in one or more of the academic majors awarded by the institution. In a university, unit means a college or its equivalent within the university. In a four-year college, unit means a school or its equivalent within the college. In a two-year college, unit means a department or division, whichever is the higher level.

(20 U.S.C. 1221c-3(a)(1); 1133)

Subpart B—Projects the Department of Education Assists Under This Program

§ 631.10 Administrative projects.

Administration projects enable institutions to provide students an opportunity to pursue alternating or parallel periods of academic study with supervised off-campus employment related to their academic majors or career goals. Projects carried out under these grants bring education, business, and industry into direct cooperation to develop educated and trained manpower.

(20 U.S.C. 1133a)

§ 631.11 Demonstration projects.

Demonstration grants are awarded primarily to provide Federal financial assistance for projects designed either to—

(a) Demonstrate the feasibility of expanding Cooperative Education in an institution to encompass nearly all academic departments or disciplines and a significant majority of a diverse student population; or

(b) Explore the feasibility of instituting innovative methods for carrying out Cooperative Education projects in various geographic setting, and in various types and sizes of institutions to meet the special problems or needs of these populations.

(20 U.S.C. 1133b)

§ 631.12 Research projects.

Research grants are awarded for studies that have broad implications for and application to the entire Cooperative Education community including but not limited to students, institutions, and employers rather than to the immediate needs of an individual institution. Grants may be awarded for, but not limited to, experimental or developmental research; cost-benefit studies; tests of methods of evaluating work experiences in academic curricula; or research specific to the needs of the varied student populations that are served in Cooperative Education projects.

(20 U.S.C. 1133b)

§ 631.13 Training projects.

Training grants are awarded to provide a specialized experience for a carefully selected group of individuals who currently participate, or are interested in participating, in the administration of Cooperative Education projects.

(20 U.S.C. 1133b)

Subpart C—How to Apply for a Grant

§ 631.20 Limitation on number of applications.

(a) The Secretary evaluates only one application for one of the four components under the Cooperative Education Program from an eligible applicant.

(b) If the Secretary receives more than one application for a specific component from the same applicant, the Secretary regards the first application from the applicant as the official application.

(c) Each application must be signed by the chief executive officers of the institution or organization.

(20 U.S.C. 1133)

§ 631.21 Applications from combinations of institutions of higher education.

In addition to the requirements specified in 34 CFR § 75.107 and 34 CFR 75.127 through § 75.129, an application from a combination of institutions of higher education must include, for each member institution, the following:

(a) A certification of support for the proposed project from the chief executive officer;

(b) A detailed narrative budget for each year of the proposed project period, certified by the chief fiscal officer, including the purposes of staff travel and explanation of fringe benefits in excess of 20 percent of the total costs of personnel; and

(c) A narrative description of the expected benefits that will be derived by the member of institution because of participation as a member of a combination of institutions of higher education.

(20 U.S.C. 1133)

§ 631.22 Application information.

In addition to the information specified in 34 CFR 75.107, an application must contain a detailed narrative budget for each year of the proposed project, including the purposes of staff travel, the purposes for the use of consultants, and an explanation of payment of fringe benefits in excess of 20 percent of the total costs of personnel.

(20 U.S.C. 1133)

Subpart D—How the Secretary Makes a Grant.

§ 631.30 Evaluation of applications from combinations of institutions of higher education.

(a) The Secretary evaluates an application from a combination of institutions of higher education as a single application.

(b) The Secretary does not give member institutions of a group individual rating scores for the applicable selection criteria.

(20 U.S.C. 1133)

§ 631.31 How the Secretary makes a grant.

(a) The Secretary evaluates an application on the basis of the selection criteria in 34 CFR 631.32 and in the appropriate part governing the component for which an application is made.

(b) The Secretary awards up to 100 possible points for these criteria.

(c) The maximum possible score for each criterion is indicated in parentheses following the selection criteria in each of the nest four parts.

(20 U.S.C. 1133)

§ 631.32 Selection criteria the Secretary uses.

The Secretary uses the following criteria in evaluating all applications for grants under Title VIII:

(a) *Plan of operation.*

(1) The Secretary reviews each application for information that show the quality of the plan of operation for the project.

(2) The Secretary looks for information that shows—

(i) The high quality in the design of the project;

(ii) An effective plan of management that ensures proper and efficient administration of the project;

(iii) A clear description of how the objectives of the project relate to the purpose of the program;

(iv) The way the applicant plans to use its resources and personnel to achieve each objective; and

(v) A clear description of how the applicant will provide equal access and treatment for eligible project participants who are members of groups that have been traditionally under-represented, such as—

(A) Members of racial or ethnic minority groups;
(B) Women;
(C) Handicapped persons: and
(D) The elderly.
(b) *Quality of key personnel.*
(1) The Secretary reviews each application for information that shows the quality of the key personnel the applicant plans to use on the project.
(2) The Secretary looks for information that shows—
(i) The qualifications of the project director;
(ii) The qualifications of each of the other key personnel to be used in the project;
(iii) The time that each person referred to in paragraphs (b)(2)(i) and (ii) of this section will commit to the project; and
(iv) The extent to which the applicant, as part of its nondiscriminatory employment practices, encourages applications for employment from persons who are members of groups that have been traditionally underrepresented, such as members of racial or ethnic minority groups, women, handicapped persons, and the elderly.
(3) To determine personnel qualifications, the Secretary considers evidence of past experience and training in fields related to the objectives of the project, as well as other information that the applicant provides.
(c) *Budget and cost effectiveness.*
(1) The Secretary reviews each application for information that shows that the project has an adequate budget and is cost effective.
(2) The Secretary looks for information that shows—
(i) The budget for the project is adequate to support the projects activities; and
(ii) Costs are reasonable in relation to the objectives of the project.
(d) *Evaluation plan.*
(1) The Secretary reviews each application for information that shows the quality of the evaluation plan for the project. (See 34 CFR § 75.590—Evaluation by the grantee.)
(2) The Secretary looks for information that shows methods of evaluation that are appropriate for the project and, to the extent possible, are objective and produce data that are quantifiable.
(e) *Adequacy of resources.*
(1) The Secretary reviews each application for information that shows that the applicant plans to devote adequate resources to the project.
(2) The facilities that the applicant plans to use are adequate; and
(ii) The equipment and supplies that the applicant plans to use are adequate.

(20 U.S.C. 1221e-3(a)(1))

§ 631.33 Minimal acceptable score.

The Secretary will not five further consideration for funding to any application that receives an average score below 50 points from the panel of experts in the review process conducted in accordance with 34 CFR 75.217.

(20 U.S.C. 1133)

Subpart E—What Conditions Must Be Met by a Grantee?

§ 631.40 Status of project director.

In addition to the requirements of 34 CFR 75.510, the project director or principal investigator shall be full-time, unless the full-time status is waived by the Secretary in accordance with 34 CFR 75.511.

(20 U.S.C. 1133)

§ 631.41 Allowable costs.

A grantee may pay those costs that are necessary and reasonable for proper and efficient administration of its project. Costs for activities may include, but are not limited to, the following:
(a) Release or overload time for faculty to help administer the program in such areas as—
(1) Student counseling and supervision;
(2) Job development, location, and placement; or
(3) Promotional activities for Cooperative Education.
(b) Conducting Cooperative Education seminars or courses for students.
(c) Student level, if a student is a member of the advisory board for the project.
(d) Services of consultants and trainers.
(e) In-service training related to Cooperative Education.
(f) Registration fees for training sessions sponsored by Cooperative Education.
(g) Travel and per diem costs for unpaid consultants, such as key personnel of Cooperative Education projects.
(h) Development, printing, and dissemination of materials related to the project.
(i) Project evaluation;
(j) Graduate students to serve as research assistants.
(k) Computer costs, if specifically approved by the Secretary.
(l) Reproduction of illustrative materials for small-scale classroom use.
(m) Dissemination of project results.

(20 U.S.C. 1133)

§ 631.42 Unallowable costs.

A grantee may not use its grant to pay the following costs:
(a) Compensation of students for work experiences or for travel cost to and from the work site;
(b) Financial assistance to students to meet educational costs;
(c) Teaching salaries for academic courses.
(d) Consultant fees or honoraria to key personnel in Cooperative Education projects who are salaried under Title VIII or any other Federal program;
(e) Purchase or lease of equipment, unless specifically authorized by the Secretary;
(f) Materials designed as a recruitment instrument for an individual institution;
(g) Development or production of audio-visual materials, unless specifically authorized by the Secretary.
(h) Individual membership fees in professional organizations.
(i) Activities associated with lobbying before Federal, State, and local legislative bodies.

(20 U.S.C. 1133)

§ 631.43 Coordination with other Federal programs.

(a) In accordance with 34 CFR 75.580, a grantee shall not duplicate activities funded under Title III of the Higher Education Act, as amended, or under the College Work-Study Program, Title IV, Part C, of the Higher Education Act, as amended.
(b) If the grantee has other projects funded under the Cooperative Education Program, the grantee shall, to the greatest extent possible, coordinate facilities, staff, supplies, telephone services, and similar operations.

(20 U.S.C. 1133)

§ 631.44 Evaluation by grantee.

In addition to the requirements of 34 CFR 75.590 relating to a self-assessment evaluation, a grantee shall provide for an outside summative evaluation by an independent consultant during each budget period at such times and in such manner as may be specified by the Secretary.

(20 U.S.C. 1133)

The Secretary proposes the following regulations to govern administration grants under the Cooperative Education Program.

Part 632 is added to read as follows:

PART 632—COOPERATIVE EDUCATION PROGRAM—ADMINISTRATION

Subpart A—General

Sec.
632.1 The Cooperative Education Program—Administration.
632.2 Eligible applicants.
632.3 Eligible students.

Subpart B—Projects the Department of Education Assists Under this Program

632.10 Projects with alternating periods of study and employment.
632.11 Projects with parallel periods of study and employments.
632.12 Ineligible projects.

Subpart C—How to Apply for a Grant

632.20 Application information.
632.21 Certification of matching funds.

Subpart D—How the Secretary Makes a Grant

632.30 Limit on years of participation.
632.31 Funding priorities.
632.32 Competition among equals.
632.33 How the Secretary makes a grant.
632.34 Selection criteria the Secretary uses.
632.35 Limit on amount of grant.

Subpart E—What Conditions Must Be Met by a Grantee

632.40 Fiscal requirements.
632.41 Extent of Federal support.

Subpart F—Administrative Responsibilities of a Grantee

632.50 Student work experience.
632.51 Frequency and duration of work experiences.
632.52 Supervision of students.
632.53 Student records.
632.54 Inservice training.

Authority: Title VIII of the Higher Education Act of 1965, as amended, Pub. L. 96-374 (20 U.S.C. 1133-1133a), unless otherwise noted.

Subpart A—General

§ 632.1 The Cooperative Education Program—Administration.

(a) The Cooperative Education Program—Administration provides Federal financial assistance for projects designed to enrich the quality of postseconday education by providing students with educationally related work experiences.

(b) The purpose of the work experiences is to enable students to—

(1) Gain knowledge that better prepares them to achieve their career objectives; and

(2) Earn funds needed for educational expenses.

(20 U.S.C. 1133a)

§ 632.2 Eligible applicants.

The following are eligible to apply for grants under this part:

(a) Institutions of higher education;

(b)(1) Combinations of institutions of higher education.

(2) A combination of institutions of higher education may be composed of not more than four member institutions that shall be located within the boundaries of a State.

(20 U.S.C 1133a)

§ 632.3 Eligible students.

(a) Students participating in Cooperative Education projects funded under this part must be—

(1) Enrolled in an institution of higher education at least half-time; and

(2) Pursuing study leading to an associate degree or a higher degree.

(b) Students employed in full-time or part-time jobs not obtained or arranged by the Cooperative Education project funded under this part are not eligible for program services.

(20 U.S.C. 1133a)

Subpart B—Projects the Department of Education Assists under this Program.

§ 632.10 Projects with alternating periods of study and employment.

The Secretary makes awards under this part for projects in which students engages in rotating periods of classroom study and supervised employment in a valid Cooperative Education project, each lasting for at least a quarter or semester term.

(20 U.S.C. 1133a)

§ 632.11 Projects with parallel periods of study and employment.

The Secretary may make awards under this part for projects in which the student, engages in both classroom study and supervised employment, with the study and employment having nearly equal significance during the course of the school day or the school week.

(20 U.S.C. 1133a)

§ 632.12 Ineligible projects.

The Secretary does not fund projects that provide for experiential learning programs, single work experiences, extended day programs, or single term internships.

(20 U.S.C. 1133a)

Subpart C—How to Apply for a Grant

§ 632.20 Application information.

In addition to the information specified in 34 CFR 75.107 through § 75.117, and 34 CFR 75.127 through § 75.129 if applicable, an applicant must provide the following:

(a) A listing of the recognized units of the institution of higher education, as defined in 34 CFR 631.3, that are eligible to apply for funds under Title VIII.

(b) Certification by the chief executive officer(s) and the chief fiscal officer(s) of the number of years each unit has received prior funding under Title VII.

(20 U.S.C. 1133a)

§ 632.21 Certification of matching funds.

(a) An applicant shall indicate the sources of funds that will be used to satisfy the matching requirements, specified in 34 CFR 632.41, for the four years subsequent to the initial grant.

(b) The budget must show evidence of review and approval by the applicant's chief fiscal officer(s) and chief administrator(s).

(c) An applicant shall compute the valuation of its contribution in accordance with 34 CFR 74.51 through § 74.57.

(20 U.S.C. 1133a)

Subpart D—How the Secretary Makes a Grant

§ 632.30 Limit on years of participation.

(a) A unit of an institution of higher education, individually or as a participant in a combination of institutions of higher education, may not receive funding under this part for more than five fiscal years.

(b) A combination of institutions that has entered into an agreement in accordance with 34 CFR 75.127 through § 75.129 may not receive a grant under this part for more than five fiscal years.

(20 U.S.C. 1133a)

§ 632.31 Funding priorities.

(a) The Secretary give priority to applicants for fifth and fourth year competing grants over applicants for funding of third and second year competing grants and new applicants.

(b) The Secretary give priority for multi-year awards to the highest ranking applications from new applicants.

(c) If an institution is not funded for consecutive years and reapplies for a grant in a subsequent fiscal year, the Secretary regards that institution as a new applicant for the year for which it is seeking funds.

(20 U.S.C. 1133a)

§ 632.32 Competition among equals.

(a) To assure equitable treatment of all applicants, the Secretary evaluates an application with others from applicants who have had the same number of years experience in carrying our Federal Cooperative Education Program projects.

(b) The Secretary evaluates an application from a combination of

institutions with applications from other combinations of institutions.

(20 U.S.C. 1133a)

§ 632.33 How the Secretary makes a grant.

(a) The Secretary evaluates an application on the basis of the general selection criteria in 34 CFR 631.32 and the criteria in § 632.34 of this Part.

(b) The Secretary awards up to 100 possible points for these criteria.

(c) The maximum possible score for each criterion is indicated in parentheses following the criterion.

(20 U.S.C. 1133a)

§ 632.34 Selection criteria the Secretary uses.

The Secretary uses the following selection criteria in awarding grants under this part:

(a) *Plan of operation.* (10 points) (For description of criterion, see 34 CFR 631.32.)

(b) *Quality of key personnel.* (7 points) (For description of criterion, see 34 CFR 631.32.)

(c) *Budget and cost effectiveness.* (5 points) (For description of criterion, see 34 CFR 631.32.)

(d) *Evaluation plan.* (5 points) (For description of criterion, see 34 CFR 631.32.)

(e) *Adequacy of resources.* (3 points) (For description of criterion, see 34 CFR 631.32.)

(f) *Institutional philosophy.* (4 points)

The Secretary reviews each application for evidence that shows that the applicant has a written Cooperative Education philosophy appropriate to the needs and characteristics of the applicant and has a clear understanding of Cooperative Education.

(g) *Administrative support.* (5 points)

The Secretary reviews each application for evidence that shows the extent to which and how the first-line administrators of the applicant have supported or are likely to support the proposed project.

(h) *Involvement in planning and implementation.* (4 points)

The Secretary reviews each application for evidence that shows the extent to which and how the applicant has involved administrators, faculty, students, employers, and Cooperative Education specialists in planning and, if a Cooperative Education project is already in existence, in carrying out the project for which funds are requested.

(i) *Expansion of Cooperative Education.* (10 points)

The Secretary reviews each application for evidence that shows the extent to which and how the applicant has used or will use its own resources to increase the size, scope, and quality of its Cooperative Education project during the period of Federal support.

(j) *Curriculum and calendar adaptability.* (5 points)

The Secretary reviews each application for evidence that shows the extent to which the applicant has modified or will modify the schedule of courses as necessary to meet the particular needs of students.

(k) *Continuing support of Cooperative Education.* (8 points)

The Secretary reviews each application for evidence that shows the extent to which and how the applicant demonstrates its intention and ability to continue Cooperative Education at the same or increased level, after Federal financial assistance ends.

(l) *Related work experiences.* (5 points)

The Secretary reviews each application for evidence that shows the extent to which the applicant has arranged for a sufficient number of employment opportunities that are related to its students' educational, professional, or occupational objectives.

(m) *Employer acceptance.* (8 points)

The Secretary reviews each application for evidence that shows the extent to which employers have provided or will provide work and career development opportunities related to academic disciplines of students involved or to be involved in the project.

(n) *Integration of work experiences.* (5 points)

The Secretary reviews each application for evidence that shows the applicant will develop, promote, and monitor close relationships between the students' work experiences and their academic studies.

(o) *Recordkeeping.* (3 points)

The Secretary reviews each application for evidence that shows the extent to which the applicant has or will develop a recordkeeping system that documents each student's academic status, classroom periods, and work periods.

(p) *Work experiences.* (5 points)

The Secretary reviews each application for evidence that shows that the number, frequency, length, and quality of work experiences are sufficient to make a significant contribution toward meeting the educational, professional, and occupational objectives of the students involved or to be involved in the project.

(q) *Supervision of students.* (4 points)

The Secretary reviews each application for evidence that shows the extent and quality of the supervision students will receive from the grantee or employer during their work experiences.

(r) *Past experience.* (4 points)

(1) The Secretary reviews each application for evidence that shows whether the applicant has carried out a project under the Cooperative Education Program or one similar to a Cooperative Education type project.

(2) If the applicant has had experience in this area, the Secretary reviews the application for evidence that shows the quality of the project in terms of—

(i) The number of full-time and the number of part-time student served by the project, by age, sex, and ethnic and racial backgrounds.

(ii) The academic disciplines served by the project.

(iii) The average number of weeks per year spent by each student in a work experience.

(iv) The average number of hours per week spent by each student in a work experience.

(v) The number and percentage of students who, on graduation, were hired in positions in which they had gained experience through the Cooperative Education or similar project.

(20 U.S.C. 1221e-(3)(a), 1133a)

§ 632.35 Limit on amount of grant.

(a) An institution of higher education may not receive a grant under this part of more than $325,000 in any fiscal year.

(b) An institution of higher education that is a member of a combination of institutions may not receive a grant of more than $250,000 under this part in any fiscal year.

(20 U.S.C. 1133a)

Subpart E—What Conditions Must Be Met by a Grantee

§ 632.40 Fiscal requirements.

(a) Unless otherwise approved by the Secretary, a grantee awarded funds under this part in any fiscal year may not use those funds to supplant Cooperative Education activities conducted by the grantee prior to the receipt of the award.

(b) The grantee shall expend for its Cooperative Education project during the fiscal year in which a grant is received an amount not less than the amount the grantee expended pended from non-Federal funds for its project during the previous fiscal year for which Federal funds were received.

(20 U.S.C. 1133a)

§ 632.41 Extent of Federal support.

Federal support or projects under this Part are established as follows:

(a) 100 percent of the total project costs in the first fiscal year for which an award is made.

(b) 90 percent of the total project costs in the second fiscal year for which an award is made.

(c) 80 percent of the total project costs in the third fiscal year for which an award is made.

(d) 60 percent of the total project costs in the fourth fiscal year for which an award is made.

(e) 30 percent of the total project costs in the fifth fiscal year for which an award is made.

(20 U.S.C. 1133a)

Subpart F—Administrative Responsibilities of a Grantee

§ 632.50 Student work experience.

(a) The work experience of each student in a Cooperative Education project under this part shall, to the greatest extent possible, be related to the student's program of study.

(b) An employer shall compensate a student in a Cooperative Education project at a rate comparable to that paid to trainees who do similar work.

(c) A student in a Cooperative Education project may work at less than the prevailing rate for employees if—

(1) The student works for a nonprofit, social, welfare, or educational organization; and

(2) The position in which the student works is one in which other employees in the organization have not been paid a higher salary.

(20 U.S.C. 1133a)

§ 632.51 Frequency and duration of work experiences.

(a)(1) A Cooperative Education project in a two-year institution of higher education must provide at least two work experiences for each participating student.

(2) Each work experience must—

(i) Be of a duration consistent with the grantee's academic calendar; and

(ii) Provide sufficient opportunities for each student to gain indepth experiences in an area related to his or her academic or career goals.

(b)(1) A Cooperative Education project in a four-year institution of higher education must provide at least four work experiences for each participating undergraduate student.

(2) Each work experience must—

(i) Be of a duration consistent with the grantee's academic calendar; and

(ii) Provide the student with sufficient opportunities to gain indepth experiences in an area related to his or her academic or career goals.

(c)(1) A Cooperative Education project for graduate students must provide two work experiences.

(2) Each work experience must—

(i) Be of a duration consistent with the grantee's academic calendar; and

(ii) Provide sufficient opportunities for each student to gain indepth experiences in an area related to his or her academic or career goals.

(20 U.S.C. 1133a)

§ 632.52 Supervision of students.

A grantee shall insure that students are adequately supervised during their work experiences and shall determine that the students are—

(a) Performing the job for which they were selected;

(b) Receiving the training necessary to gain proficiency in the areas to which they were assigned;

(c) Achieving learning objectives appropriate to their major academic fields and/or career objectives;

(d) Exhibiting professional work habits;

(e) Compensated at the rate designated; and

(f) Working in safe conditions.

(20 U.S.C. 1133a)

§ 632.53 Student records.

A grantee shall maintain individual records on each student participating in its project. The records shall include, but are not limited to, the following:

(a) Name, age, sex, and ethnic and racial background;

(b) Permanent mailing address;

(c) Major field of study;

(d) Career objective(s);

(e) The number and types of the student's work experiences in this project, including reports from employers;

(f) If applicable, the reason(s) student left project;

(g) First employment after graduation, if known.

(20 U.S.C. 1133a)

§ 632.54 In-service training.

A grantee shall insure that the staff of its Cooperative Education project has an opportunity to participate in training that will enable the staff to—

(a) Operate the project more effectively; and

(b) Develop the expertise to expand the Cooperative Education project.

(20 U.S.C. 1133a)

The Secretary proposes the following regulations to govern demonstration grants under the Cooperative Education Program:

Part 633 is added to read as follows:

PART 633—COOPERATIVE EDUCATION PROGRAM—DEMONSTRATION

Subpart A—General

Sec.
633.1 The Cooperative Education Program—Demonstration.
633.2 Eligible applicants.
633.3 Eligible participants.

Subpart B—Projects the Department of Education Assists Under This Program

633.10 Comprehensive projects.
633.11 Special Projects

Subpart C—How To Apply for a Grant [Reserved]

Subpart D—How the Secretary Makes a Grant

633.30 Extent of support for demonstration projects.
633.31 How the Secretary makes a grant.
633.32 Selection criteria the Secretary uses for all demonstration projects.
633.33 Additional selection criteria the Secretary uses for comprehensive projects.
633.34 Additional selection criteria the Secretary uses for special projects.

Subpart E—What Conditions Must Be Met by the Grantee [Reserved]

Subpart F—Administrative Responsibilities of a Grantee

633.50 Staffing requirements.
633.51 Student work experience.
633.52 Frequency and duration of work experiences.
633.53 Supervision of students.
633.54 Student records.
633.55 In-service training.

Authority: Title VIII of the Higher Education Act of 1965, as amended, Pub. L. 96-374 (20 U.S.C. 1133, 1133b), unless otherwise noted.

Subpart A—General

§ 633.1 The Cooperative Education Program—Demonstation.

The Cooperative Education Program—Demonstration provides Federal financial assistance for projects designed either to—

(a) Demonstrate the feasibility of expanding Cooperative Education in an institution to encompass nearly all academic departments or disciplines and a significant majority of a diverse student population, or

(b) Explore the feasibility of instituting innovative methods for carrying out Cooperative Education project in various geographic settings and in various types and sizes of institutions to meet the special problems or needs of these populations.

(20 U.S.C. 1133b)

§ 633.2 Eligible applicants.

The following are eligible to apply for grants under this part:

(a) Institutions of higher education.

(b) Combinations of institutions of higher education.

(c) Public or private nonprofit agencies or organizations, if the agency or organization is serving as the coordinating and fiscal agent for a combination or institutions of higher education.

this part.

(20 U.S.C. 1133b)

§ 633.3 Eligible participants.

(a) Students participating in Cooperative Education projects funded under this part must be—

(1) Enrolled in an institution of higher education at least half-time; and

(2) Pursuing study leading to an associate degree or a higher degree.

(b) Students employed in full-time or part-time jobs not obtained or arranged by Cooperative Education projects funded under this part are not eligible for program services.

(20 U.S.C. 1133b)

Subpart B—Projects the Department of Education Assists Under this Program

§ 633.10 Comprehensive projects.

The Secretary may make awards under this part for comprehensive Cooperative Education projects that demonstrate—

(a) The feasibility of expanding the Cooperative Education concept throughout an institution to encompass nearly all academic departments or disciplines and serve a significant majority of a diverse student population; and

(b) A commitment to continue Cooperative Education at or above the level of Federal financial assistance received under Title VIII after such assistance has ended.

(20 U.S.C. 1133b)

§ 633.11 Special projects.

The Secretary makes awards under this part for special Cooperative Education projects that explore the feasibility of innovative methods for any of the following:

(a) Serving graduate students.

(b) Serving handicapped students.

(c) Implementing an international Cooperative Education project.

(d) Implementing a Cooperative Education project or projects in various isolated settings or in various sizes and types of institutions; and

(e) Furthering the concept of Cooperative Education in other ways proposed by an applicant and approved by the Secretary.

(20 U.S.C. 1133b)

Subpart C—How to Apply for a Grant [Reserved]

Subpart D—How the Secretary Makes a Grant

§ 633.30 Extent of support for demonstration projects.

(a) The Secretary awards grants under this part for single-year or multi-year project periods.

(b) If the Secretary approves a multi-year project period, for a special project, the continuation of the multi-year project will be in accordance with 34 CFR 75.253.

(c) Comprehensive Cooperative Education projects will receive one multi-year award out of a single fiscal year appropriation.

(20 U.S.C. 1133b)

§ 633.31 How the Secretary makes a grant.

(a) The Secretary evaluates an application on the basis of—

(1) The general criteria in 34 CFR 631.32; and

(2) The criteria in 34 CFR 633.33 or 633.34.

(b) The Secretary awards up to 100 possible points for these criteria.

(c) The maximum possible score for each complete criterion is indicated in parentheses following the criterion.

(20 U.S.C. 1133b)

§ 633.32 Selection criteria the Secretary uses for all projects.

The Secretary uses the following selection criteria in awarding demonstration grants under this part:

(a) *Plan of operation.* (10 points) (For description of criterion, see 34 CFR 631.32.)

(b) *Quality of key personnel.* (7 points) (For description of criterion, see 34 CFR 631.32.)

(c) *Budget and cost effectiveness.* (5 points) (For description of criterion, see 34 CFR 631.32.)

(d) *Evaluation plan.* (5 points) (For description of criterion, see 34 CFR 631.32.)

(e) *Adequacy of resources.* (3 points) (For description of criterion, see 34 CFR 631.32.)

(20 U.S.C. 1221e-(3)(a), 1133b)

§ 633.33 Additional selection criteria the Secretary uses for comprehensive projects.

In addition to the criteria in § 633.32, the Secretary uses the following criteria in awarding grants for comprehensive projects:

(a) *Cooperative Education philosophy.* (5 points)

The Secretary reviews each application for evidence that shows the extent to which a written Cooperative Education philosophy—

(1) Is reflected in the applicant's mission statement; and

(2) Clearly supports the expansion required for a comprehensive Cooperative Education project.

(b) *Preplanning for a comprehensive project.* (5 points)

The Secretary reviews each application for evidence that shows the extent to which the applicant has conducted the necessary preplanning that is required to develop and demonstrate a comprehensive Cooperative Education project.

(c) *Acceptance of plan.* (10 points)

The Secretary reviews each application for evidence that shows the extent to which the plan for implementing the comprehensive project has been accepted by the responsible officials of the institution, agency, or organization, and by faculty, employers, students, and the community.

(d) *Integration of the comprehensive project.* (10 points)

The Secretary reviews each application for evidence that shows the extent of the actions taken by administrators and faculty to integrate the comprehensive Cooperative Education project into the academic policies, programs, and objectives of the institution.

(e) *Continued commitment.* (10 points)

The Secretary reviews each application for evidence that shows the extent to which the applicant will continue the comprehensive project after Federal financial assistance has ended.

(f) *Employer support.* (10 points)

The Secretary reviews each application for evidence that shows the extent of employer support for the development of a comprehensive Cooperative Education project.

(g) *Schedule for institutionalization.* (15 points)

The Secretary reviews each application for evidence that shows the extent to which the schedule for institutionalizing Cooperative Education, including the rationale and procedures associated with each activity, will result in changes in—

(1) The organizational structure of the applicant;

(2) The curricula to meet the needs of students participating in Cooperative Education;

(3) The academic calendar;

(4) The awarding of credits;

(5) Increased faculty involvement;

(6) Increased employer involvement;
(7) Counseling techniques; and
(8) Supervision of students during their work experiences.

(h) *On-going dissemination of processes and results.* (5 points)

The Secretary reviews each application for evidence that shows the quality of the plan to disseminate, on an ongoing basis, the processes and results of the comprehensive project.

(20 U.S.C. 1133b)

§ 633.34 Additional selection criteria the Secretary uses for special projects.

In addition to the criteria in 34 CFR 633.32, the Secretary uses the following criteria in awarding grants for a special project:

(a) *Cooperative Education philosophy.* (5 points)

The Secretary reviews each application for evidence that shows the extent to which a written Cooperative Education philosophy—

(1) Is reflected in the applicant's mission statement; and

(2) Clearly supports the operation of a special project.

(b) *Preplanning for a special project.* (5 points)

The Secretary reviews each application for evidence that shows the extent to which the applicant has conducted the necessary preplanning that is required to develop and demonstrate a special project.

(c) *Acceptance of plan.* (10 points)

The Secretary reviews each application for evidence that shows the extent to which the plan for implementing the special project has been accepted by the responsible officials of the institution, agency, or organization, and by faculty, employers, students, and the community.

(d) *Need for the special project.* (20 points)

The Secretary reviews each application for a substantive explanation of the need for the special project.

(e) *Employer support.* (10 points)

The Secretary reviews each application for evidence that shows the extent of employer support for the development of the special project.

(f) *Uniqueness of approach.* (15 points)

The Secretary reviews each application to determine the extent to which the applicant has developed and explained the rationale and procedures that demonstrate an innovative or unique approach to Cooperative Education and the value or relevance the project will have for the Cooperative Education community.

(g) *Dissemination.* (5 points)

The Secretary reviews each application to determine the quality of the plan to disseminate the processes and results of the special project to the Cooperative Education community.

(20 U.S.C. 1133b)

Subpart E—What Conditions Must Be Met by a Grantee [Reserved]

Subpart F—Administrative Responsibilities of a Grantee

§ 633.50 Staffing requirements.

To the greatest extent possible, the staff of a project funded under this part shall reflect the sex, ethnic, racial, and other demographic characteristics of the students to be served by the project.

(20 U.S.C. 1133b)

§ 633.51 Student work experience.

(a) The work experience of each student in a Cooperative Education project funded under this part shall, to the greatest extent possible, be related to the student's program of study.

(b) An employer shall compensate a student under this program at a rate comparable to that paid to trainees who do similar work.

(c) A student in a Cooperative Education project may work at less than the prevailing rate for employees if—

(1) The student works for a nonprofit, social, welfare, or educational organization; and

(2) The position in which the student works is one in which other persons in the organization have not been paid a higher salary.

(20 U.S.C. 1133b)

§ 633.52 Frequency and duration of work experiences.

(a)(1) A Cooperative Education project in a two-year institution of higher education must provide at least two work experiences for each participating student.

(2) Each work experience must—

(i) Be of a duration consistent with the grantee's academic calendar; and

(ii) Provide the student with sufficient opportunities to gain indepth experience in an area related to his or her academic or career goals.

(b)(1) A Cooperative Education project in a four-year institution of higher education must provide at least four work experiences for each participating undergraduate student.

(2) Each work experience must—

(i) Be of a duration consistent with the grantee's academic calendar; and

(ii) Provide the student with sufficient opportunities to gain indepth experiences in an area related to his or her academic or career goals.

(c)(1) A Cooperative Education project for graduate students must provide two work experiences.

(2) Each work experience must—

(i) Be of a duration consistent with the grantee's academic calendar; and

(ii) Provide sufficient opportunities for each student to gain indepth expereinces in an area related to his or her academic or career goals.

(20 U.S.C. 1133b)

§ 633.53 Supervision of students.

A grantee shall ensure that students are adequately supervised during their work experiences and shall determine that the students are—

(a) Performing the job for which they were selected;

(b) Receiving the training necessary to gain proficiency in the areas to which they were assigned;

(c) Achieving learning objectives appropriate to their major academic fields and/or career objectives;

(d) Exhibiting professional work habits;

(e) Compensated at the rate designated; and

(f) Working in safe conditions.

(20 U.S.C. 1133b)

§ 633.54 Student records.

A grantee shall maintain individual records on each student participating in its project. The records shall include, but are not limited to, the following:

(a) Name, age, sex and ethnic and racial background;

(b) Permanent mailing address;

(c) Major field of study;

(d) Career objective(s);

(e) The number and types of the student's work experiences in this project, including reports from employers;

(f) If applicable, the reason(s) student left project;

(g) First employment after graduation, if known.

(20 U.S.C. 1133b)

§ 633.55 In-service training.

A grantee shall insure that the staff of its Cooperative Education project has an opportunity to participate in training that will enable the staff to—

(a) Operate the project more effectively; and

(b) Develop the expertise to expand the Cooperative Education project.

(20 U.S.C. 1133b)

The Secretary proposes the following regulations to govern research grants under the Cooperative Education Program.

Part 634 is added to read as follows:

PART 634—COOPERATIVE EDUCATION PROGRAM—RESEARCH

Subpart A—General

Sec.
634.1 The Cooperative Education Program—Research.
634.2 Eligible applicants.

Subpart B—Projects the Department of Education Assist Under This Program

634.10 Eligible projects.
634.11 Priority areas for research.

Subpart C—How to Apply for a Grant [Reserved]

Subpart D—How the Secretary Makes a Grant

634.30 How the Secretary makes a grant.
634.31 Selection criteria the Secretary uses.

Subpart E—What Conditions Must be Met by a Grantee [Reserved]

Subpart F—Administrative Responsibilities of a Grantee

634.50 Dissemination of results.

Authority: Title VIII of the Higher Education Act of 1965, as amended, Pub. L. 96-374 (20 U.S.C. 1133, 1133b), unless otherwise noted.

Subpart A—General

§ 634.1 The Cooperative Education Program—Research.

The Cooperative Education Program—Research provides Federal financial assistance for research into methods that can result in—

(a) Improving the operation of the Cooperative Education Program;

(b) Promoting the use of Cooperative Education as an alternative educational approach to assist students to prepare for careers and to finance their educational pursuits; and

(c) Developing better cooperation between secondary schools, institutions of higher education, business, and industry to enhance the opportunity for students to participate in work experiences related to academic preparation.

(20 U.S.C. 1133b)

§ 634.2 Eligible applicants.

The following are eligible to apply for grants under this part:

(a) Institutions of higher education.

(b) Combinations of institutions of higher education.

(c) Public or private nonprofit agencies or organizations, if the agency or organization is serving as the coordinating and fiscal agent for a combination of institutions of higher education.

(20 U.S.C. 1133b)

Subpart B—Projects the Department of Education Assists Under This Program.

§ 634.10 Eligible projects.

The Secretary makes awards under this part for research projects that yield information and direction in dealing with, but not limited to, the following:

(a) Improving the way services are provided by Cooperative Education projects.

(b) Expanding the Cooperative Education concept in institutions of higher education.

(c) Evaluating the benefits of Cooperative Education, such as the correlation between participation and nonparticipation.

(d) Identifying and assessing the effective institutionalization of Cooperative Education.

(e) Promoting the Cooperative Education Program within secondary schools, institutions of higher education, industry, business, and the community.

(20 U.S.C. 1133b)

§ 634.11 Priority areas for research.

(a) The Secretary may, from time to time, select for priority funding research one or more of the following:

(1) Identification and assessment of commonalities in quality Cooperative Education projects.

(2) The correlation between former grantees that continued or did not continue Cooperative Education after Federal financial assistance ended.

(3) Assessment of the impact of varied factors that hinder or enhance—

(i) Student participation;

(ii) Faculty participation; or

(iii) Upper mobility.

(6) Assessment of the impact of Cooperative Education on the retention and grade point averages of students participating in Cooperative Education.

(7) Assessment of the impact of a comprehensive Cooperative Education project on—

(i) Student life at the institution;

(ii) Faculty;

(iii) Community resources; or

(iv) Employment opportunities.

(8) Other areas that may be identified by the Secretary.

(b) The Secretary announces subjects for priority funding, if any, in the annual application notice published in the Federal Register.

(20 U.S.C. 1133b)

Subpart C—How to Apply for a Grant [Reserved]

Subpart D—How the Secretary Makes a Grant

§ 634.30 How the Secretary makes a grant.

(a) The Secretary evaluates an application on the basis of the general criteria in 34 CFR 631.32 and the criteria in § 634.32, below.

(b) The Secretary awards up to 100 possible points for these criteria.

(c) The maximum possible score for each criterion is indicated in parentheses following the criterion.

(20 U.S.C. 1133b)

§ 634.31 Selection criteria the Secretary uses.

The Secretary uses the following selection criteria in awarding grants under this part:

(a) *Plan of operation.* (15 points) (For description of criterion, see 34 CFR 631.32.)

(b) *Quality of key personnel.* (10 points) (For description of criterion, see 34 CFR 631.32.)

(c) *Budget and cost effectiveness.* (5 points) (For description of criterion, see 34 CFR 631.32.)

(d) *Evaluation plan.* (5 points) (For description of criterion, see 34 CFR 631.32.)

(e) *Adequacy of resources.* (5 points) (For description of criterion, see 34 CFR 631.32.)

(f) *Relevancy of research.* (20 points)

The Secretary reviews each application for evidence that shows—

(1) The extent to which the applicant demonstrates that the proposed research is responsive to a major problem or need in Cooperative Education; and

(2) The extent to which the findings would be of value to the whole or a specific population of the Cooperative Education community.

(g) *Design of research.* (35 points)

The Secretary reviews each application for evidence that shows the quality of the research design that includes—

(1) A clear description of the problem at which the research is directed;

(2) A well-defined hypothesis;

(3) A clear description of research methods to prove or disprove the hypothesis.

(4) The sampling method to be used, including the size and proportion of the sample population to the universe of the population being studied; and

(5) A well-defined and organized data analysis plan.

(h) *Dissemination.* (5 points)

The Secretary reviews each application for evidence that shows the

quality of the plan for the dissemination of the research findings.

(20 U.S.C. 1221e-(3)(a), 1133b)

Subpart E—What Conditions Must Be Met by a Grantee [Reserved]

Subpart F—Administrative Responsibilities of a Grantee

§ 634.50 Dissemination of results.

(a) A grantee's final report to the research findings much include at least the following:

(1) A description of the problem.

(2) The hypothesis.

(3) The research method(s) employed.

(4) An explanation of the sampling methods if applicable.

(5) The data analysis methodology.

(6) The findings.

(7) The conclusion(s).

(8) An executive summary.

(b) Any information or documents produced as a result of research under this part is the property of the Department of Education and may not be used for the personal benefit of the grantee, principal investigator, or key personnel involved in the research.

(c) A grantee shall make available to the public, without charge other than postage, its report of the findings of the research.

(20 U.S.C. 1133b)

The Secretary proposed the following regulations to govern training grants under the Cooperative Education Program.

Part 635 is added to read as follows:

PART 635—COOPERATIVE EDUCATION PROGRAM—TRAINING

Subpart A—General

Sec.
635.1 The Cooperative Education Program—Training
635.2 Eligible applicants.
635.3 Eligible participants.

Subpart B—Projects the Department of Education Assists Under This Program

635.10 Eligible projects.
635.11 Priority areas for training.

Subpart C—How to Apply for a Grant [Reserved]

Subpart D—How the Secretary Makes a Grant.

635.30 How the Secretary Makes a grant.
635.31 Selection criteria the Secretary uses.
635.32 Geographic distribution.

Subpart E—What Conditions Must Be Met by a Grantee [Reserved]

Subpart F—Administrative Responsibilities of a Grantee

635.50 Announcements of training sessions.
635.51 Availability of training material of the public.

Authority: Title VIII of the Higher Education Act of 1965, as amended, Pub. L. 96-374 (20 U.S.C. 1133, 1133b), unless otherwise noted.

Subpart A—General

§635.1 The Cooperative Education Program—Training

(a) The Cooperative Education Program—Training provides Federal financial assistance to train persons who participate or wish to participate in the administration of Cooperative Education projects at institutions of postsecondary education.

(b) The purpose of the training under this part is to enable participants to provide more effectively the academic and work experiences that will enable students to realize their academic and career objects.

(20 U.S.C. 1133b)

§635.2 Eligible applicants.

The following are eligible to apply for grants under this part:

(a) Institutions of higher education.

(b) Combinations of institutions of higher eduction.

(c) Public or nonprofit private agencies or organizations, if the agency or organization is serving as the coordinating and fiscal agent for a combination of institutions of higher education.

(20 U.S.C. 1133b)

§635.3 Eligible participants.

Funds under this part may be used to provide training for the following:

(a) Presidents and administrators of institutions of postsecondary education with or without federally-funded Cooperative Education projects.

(b) Faculty and staff of institutions of postsecondary education with or without federally-funded Cooperative Education projects.

(c) High school personnel responsible for career and academic guidance.

(d) Employers or prospective employers of students in Cooperative Education projects.

(e) Members of professional and scholarly organizations.

(20 U.S.C. 1133b)

Subpart B—Projects the Department of Education Assists Under This Program

§ 635.10 Eligible projects.

(a) Training projects funded under this part shall be designed to develop skills necessary to administer Cooperative Education projects.

(b) The Secretary makes awards under this part to provide training dealing with, but not limited to, the following:

(1) Responsibilities of directors or coordinators in administering Cooperative Education projects;

(2) Modification of teaching practices, academic calendars, and curricula;

(3) Relationships between work experiences and students' academic programs;

(4) Roles and responsibilities of employers and supervisors of students in Cooperative Education projects;

(5) Integration of the Cooperative Education project into the academic programs and policies of an institution of higher education;

(6) Placement, supervision, and evaluation of students in Cooperative Education work experiences;

(7) Placement and supervision of special student populations;

(8) Cooperative Education for graduate students;

(9) Effective communications and relationships within the grantee structure;

(10) Improving employer participation in Cooperative Education;

(11) Improving college-community relations affecting Cooperative Education;

(12) Improving faculty attitudes toward Cooperative Education;

(13) Development of large-scale or comprehensive Cooperative Education projects;

(14) Planning, management, and evaluation of Cooperative Education projects; and

(15) Improving the use of management information systems.

(20 U.S.C. 1133b)

§ 635.11 Priority areas for training.

(a) The Secretary may, from time to time, select for priority funding training in one or more of the following:

(1) The development of appropriate skills to manage effectively Cooperative Education projects.

(2) The development of comprehensive Cooperative Education projects.

(3) The development of student, faculty, and employer receptivity.

(4) The integration of the Cooperative Education project into the academic programs and policies of the grantees.

(5) The development of Cooperative Education trainers.

(6) Determinining cost and income implications for various constituents of the Cooperative Education Community.

(7) Other areas that may be identified by the Secretary.

(b) The Secretary announces subjects for priority funding, if any, in the annual

application notice published in the Federal Register.

(20 U.S.C. 1133b)

Subpart C—How To Apply for a Grant [Reserved]

Subpart D—How the Secretary Makes a Grant

§ 635.30 How the Secretary makes a grant.

(a) The Secretary evaluates an application on the basis of the general criteria listed in 34 CFR 631.32 and the criteria listed in § 635.31 of this Part.

(b) The Secretary awards up to 100 possible points for these criteria.

(c) The maximum possible score for each completed criterion is indicated in parentheses following the criterion.

(20 U.S.C. 1133b)

§ 635.31 Selection criteria the Secretary uses.

The Secretary uses the following selection criteria in awarding grants under this part:

(a) *Plan of operation.* (10 points) (For description of criterion, see 34 CFR 631.32.)

(b) *Quality of key personnel.* (7 points) (For description of criterion, see 34 CFR 631.32)

(c) *Budget and cost effectiveness.* (5 points) (For description of criterion, see 34 CFR 631.32.)

(d) *Evaluation plan.* (10 points) (For description of criterion, see 34 CFR 631.32.)

(e) *Adequacy of resources.* (3 points) (For description of criterion, see 34 CFR 631.32.)

(f) *Needs assessment.* (20 points)

The Secretary reviews each application for evidence that shows the extent of which the applicant provides evidence of a need for—

(1) Training in its geographic area; or

(2) Training of a specialized nature addressed to a nationwide clientele.

(g) *Thoroughness of training design.* (10 points)

The Secretary reviews each application for evidence that shows the extent to which the applicant gives evidence of comprehensive planning, including the procedures used in developing the design.

(h) *Scope of training.* (10 points)

The Secretary reviews each application for evidence that shows the extent to which the proposed project will address the needs of the consitutency selected to receive training, based on the use of needs analysis data.

(i) *Anticipated results.* (10 points)

The Secretary reviews each application for evidence that shows the extent to which the proposed project has promise of fulfilling the proposed objectives identified in the needs assessment, training design, and scope of training.

(j) *Prior experience.* (10 points)

The Secretary reviews each application for evidence that shows the extent to which the key personnel have demonstrated their experience in related and effective Cooperative Education projects, or with innovations which have been or can be successful in a Cooperative Education project:

(20 U.S.C. 1221-e(3)(a), 1133b)

§ 635.32 Geographic distribution.

The Secretary, to the greatest extent possible, awards grants for training projects at locations within reasonable distance to Title VIII Cooperative Education projects funded under 34 CFR Parts 632 and 633. For this purpose, the Secretary considers sites based on Federally-recognized regions.

(20 U.S.C. 1133b)

Subpart E—What Conditions Must Be Met by a Grantee [Reserved]

Subpart F—Administrative Responsibilities of a Grantee

§ 635.50 Announcements of training sessions.

(a) All announcements inviting participants to training sessions shall contain, as a minimum, the following information:

(1) Target population to be served, such as by position, experience level, type of institution, or other similar characteristic;

(2) Any specific eligibility or prerequisite requirements for participants;

(3) Anticipated outcomes or skills to be acquired;

(4) Identification and qualifications of trainer(s) to be used;

(5) Registration or other fees to be charged, including the purpose for the fees.

(b) The grantee shall send a copy of any announcement for training to the appropriate official of the Department of Education.

(20 U.S.C. 1133b)

§ 635.51 Availability of training material to the public.

(a) All training materials developed by a grantee under this part are the property of the Department of Education.

(b) The grantee, during the life of the grant, shall disseminate training material developed under this part to interested parties on written request or furnish overage to the Department of Education for distribution.

(c) The grantee shall make available to interested parties for duplication purposes the training films develped under this part.

(20 U.S.C. 1133b)

[FR Doc. 80-40332 Filed 12-30-80; 8:45 am]
BILLING CODE 4000-01-M

federal register

Wednesday
December 31, 1980

Part XVIII

Environmental Protection Agency

Control of Air Pollution From Aircraft; Standards Amended

ENVIRONMENTAL PROTECTION AGENCY

40 CFR Part 87

[AMS-FRL-1699-7; Docket No. OMSAPC-78-1]

Control of Air Pollution From Aircraft; Amendment to Standards

AGENCY: Environmental Protection Agency (EPA).

ACTION: Final rule.

SUMMARY: This final rule sets back by 2 years, until January 1, 1983, the effective date for all gaseous emissions standards which would otherwise have been effective on January 1, 1981, for aircraft gas turbine engines. This change in compliance date is necessary because the final amendments to these standards which were proposed on March 24, 1978 (43 FR 12615) have not yet been promulgated and there would be insufficient time remaining in 1980 for the Federal Aviation Administration to develop enforcement regulations following their promulgation, if the compliance date remained at January 1, 1981. Also being published in this notice is a minor addition to the exemption provisions of the aircraft emissions standards. This notice also announces the public availability for comment of a report covering a joint investigation by FAA and EPA of the air quality basis for aircraft emissions standards.

DATES: The amendments to the compliance date are effective December 31, 1980; the change to the exemption provision is effective January 30, 1981. All comments relating to the report "Impact of Aircraft Emissions on Air Quality in the Vicinity of Airports" (FAA-EE-80-09A) should be submitted on or before March 2, 1981.

ADDRESS: Interested persons may submit written comments on the Air Quality Investigation to the Central Docket Section (A-130), Environmental Protection Agency, Washington, D.C. 20460, (Docket OMSAPC-78-1).

FOR FURTHER INFORMATION CONTACT: George Kittredge, Senior Technical Advisor, Office of Mobile Source Air Pollution Control (ANR-455), Environmental Protection Agency, Washington, D.C. 20460, 202-426-2514.

SUPPLEMENTARY INFORMATION: On July 17, 1973 (38 FR 19090) EPA promulgated gaseous emissions standards applicable to engines which power most categories of turbine powered commercial aircraft, to take effect on January 1, 1979, following the development and certification of the necessary technological means for compliance. On March 24, 1978 (43 FR 12615), EPA proposed extensive changes to these standards, based on new information concerning the technological means for compliance. At the same time, the January 1, 1979, compliance date for the original standards was set back to January 1, 1981, to allow more time to complete final rulemaking following the public hearing, technical analysis of the comments, and completion of other supporting activities. In the preamble to the March 24, 1978, proposal it was stated that "The air quality justification for control of airport NO_x emissions has been questioned. ("Potential Impact of NO_x Emissions from Commercial Aircraft on NO_2 Air Quality," Bruce C. Jordan, EPA, November 15, 1977). Therefore, a study has been planned which will incorporate the up-to-date aircraft emissions estimates referenced above, the most recent meteorological information, and the most advanced available mathematical modelling techniques for prediction of ambient air concentrations of pollutants in the airport environment. This study will be carried out jointly by the EPA and the Federal Aviation Administration and is expected to be completed in 1979."

Circumstances prevented completion of the study in 1979, in part because its scope was expanded to include carbon monoxide as well as nitrogen oxides. It has now been completed and the final report is available for public review and comment. A limited number of copies are available upon request to the Office of Environment and Energy (AEE-300), Federal Aviation Administration, Washington, D.C. 20591.

Over and above the airport air quality consideration, EPA's evaluation of the comments on the March 24, 1978, proposal and the economic costs of applying such technology has taken much longer than expected. Therefore, it has not been possible to proceed with implementation of revised final standards.

There is insufficient time available during the remainder of 1980 to announce the availability of the report covering the airport air quality analysis, to allow a reasonable period of time for public comment on the report, to evaluate these comments, to promulgate final revised standards and for FAA to then propose and promulgate appropriate enforcement regulations.

For all of the reasons cited above it is necessary to postpone the January 1, 1981 implementation date for all gaseous emissions standards. Otherwise, manufacture of the affected engines could not legally continue after that date, since there are no known techniques available to permit compliance.

On May 13, 1980, and again on October 27, 1980, EPA received letters from the Federal Aviation Administration explaining the concerns of that agency over the short time remaining to accomplish effective rulemaking action before the end of 1980 and urging that EPA postpone the effective date for the standards by at least two more years.

Several of the manufacturers who are affected by this pending rulemaking have also written to EPA during the past year, citing reasons which would make it impossible for them to comply with the proposed revised standard by January 1, 1981.

Copies of the Airport Air Quality Report, May 13, 1980, FAA letters and all relevant correspondence with manufacturers on this topic are available for public review in EPA Docket OMSAPC-78-1, Central Dockets Section, West Tower Lobby, 401 M Street, SW., Washington, D.C. 20460. The docket may be inspected between 8:00 a.m. and 4:00 p.m. on weekdays and a reasonable fee may be charged for copying.

Following the receipt and evaluation of public comments received on this report, EPA will proceed with promulgation of the final standards. In so doing, EPA will take careful note of the conclusions and recommendations of the International Civil Aviation Organization (ICAO) Committee on Aircraft Engine Emissions (CAEE) at its second meeting May 14-29, 1980.

Action: With due consideration of the foregoing, EPA has determined that the effective date for all gaseous emissions standards scheduled to be implemented on January 1, 1981, should, as an interim measure, be postponed by 2 years to January 1, 1983, so as to permit the continued manufacture of aircraft gas turbine engines during the period between January 1, 1981, and the compliance date specified in the final amended standards. This action should allow reasonable time for completion of all activities discussed above and will facilitate the establishment of final revised standards based on the best obtainable information on the air quality impact of commercial aircraft operations.

The Agency finds that to propose the revisions of the compliance date prior to final rulemaking would be impractical and contrary to the public interest. These revisions are critical to the activities of the manufacturers of aircraft engines, and must be effective prior to the present January 1, 1981, effective date for gaseous emission

standards to allow for continued manufacture of aircraft gas turbine engines. The Agency finds further that there is good cause to make these revisions effective earlier than 30 days after their promulgation, because these revisions relieve restrictions in the present regulations.

An additional amendment being promulgated at this time concerns exemptions from Federal emission standards. On July 18, 1979, EPA proposed a revision to 40 CFR Part 87 to exempt aircraft engines from emission standards in certain situations. These situations include, but are not limited to, (1) flights for the purpose of export, including flights needed to demonstrate the integrity of an aircraft prior to its flight to a site outside the United States, (2) flights to a base where repairs, alterations or maintenance are to be performed, or to a point of storage, and flights to return an aircraft to service, and (3) official visits by representatives of foreign governments.

On August 22, 1979, EPA held a hearing in Washington, D.C., to afford the public an opportunity to comment on the proposal. No individuals presented testimony at the hearing and only two written submissions were received in response to the proposal.

The National Business Aircraft Association expressed support for this action. The Air Transport Association of America (ATA) expressed concern over the fact that § 87.7(d) contained vague terminology. They specifically asked whether foreign charter operations would be considered flights "for short durations at infrequent intervals."

The EPA proposal published on July 18, 1979, intended specifically to exempt those flights described in §§ 87.7(a), (b), and (c). With the exception of official visits by representatives of foreign governments, such flights are solely of a non-passenger and non-freight nature. Section 87.7(d) was added to enable the EPA and DOT to make determinations related to flights of a similar nature, but which have not been contemplated at this time. The Agency does not regard a charter operation as being of a similar nature even if it occurs only once and, therefore, such operations would not be exempted from aircraft standards.

The ATA also questioned whether determinations under § 87.7(d) must be made before or after the flights take place and, if after, whether an operator could face retroactive prosecution. The EPA intends such determinations to be made before flights occur and has revised the language of this section to clearly indicate this fact.

Note.—This rulemaking action does not constitute a regulation which will result in major economic impact. Accordingly, the Environmental Protection Agency has determined that this document does not constitute a "significant" regulation requiring the preparation of a Regulatory Analysis under Executive Order 12044.

These amendments are made pursuant to Sections 231 and 301(a) of the Clean Air Act, as amended (42 U.S.C. 7571 and 7601(a)).

Dated: December 22, 1980.

Douglas M. Costle,

Administrator.

Part 87, Chapter I, Title 40 of the Code of Federal Regulations, is amended as follows:

1. Section 87.21 (d) and (e)(1) are revised to read as follows:

§ 87.21 Standards for exhaust emissions.

* * * * *

(d) Exhaust emissions from each aircraft gas turbine engine of the classes specified below manufactured on or after January 1, 1983, shall not exceed:

(1) Class T1:

(i) Hydrocarbons—1.6 pounds/1,000 pound-thrust hours/cycle

(ii) Carbon monoxide—9.4 pounds/1,000 pound-thrust hours/cycle

(iii) Oxides of nitrogen—3.7 pounds/1,000 pound-thrust hours/cycle

(iv) Smoke—Smoke number from Figure 1.

(2) Class T2, T3, T4:

(i) Hydrocarbons—0.8 pound/1,000 pound-thrust hours/cycle

(ii) Carbon monoxide—4.3 pounds/1,000 pound-thrust hours/cycle

(iii) Oxides of nitrogen—3 pounds/1,000 pound-thrust hours/cycle

(iv) Smoke—Smoke number from Figure 1.

(3) Class P2:

(i) Hydrocarbons—4.9 pounds/1,000 horsepower-hours/cycle

(ii) Carbon monoxide—26.8 pounds/1,000 horsepower-hours/cycle

(iii) Oxides of nitrogen—12.9 pounds/1,000 horsepower-hours/cycle

(iv) Smoke—Smoke number from Figure 2.

(4) Class T5:

(i) Hydrocarbons—3.9 pounds/1,000 pound-thrust hours/cycle

(ii) Carbon monoxide—30.1 pounds/1,000 pound-thrust hours/cycle

(iii) Oxides of nitrogen—9.0 pounds/1,000 pound-thrust hours/cycle

(iv) Smoke—Smoke number from Figure 1.

(e) Exhaust emissions from each newly certified aircraft gas turbine engine of the classes specified below manufactured on or after the dates indicated shall not exceed:

(1) Class T2, T3, or T4 (January 1, 1983).

* * * * *

2. A new § 87.7 is added as follows:

§ 87.7 Exemptions.

The emission standards of this part do not apply to engines which power aircraft operated in the United States for short durations at infrequent intervals. Such operations are limited to:

(a) Flights of an aircraft for the purpose of export to a foreign country, including any flights essential to demonstrate the integrity of an aircraft prior to its flight to a point outside the United States;

(b) Flights to a base where repairs, alterations or maintenance are to be performed, or to a point of storage, and flights for the purpose of returning an aircraft to service;

(c) Official visits by representatives of foreign governments; and

(d) Other flights the Secretary of Transportation determines, after consultation with the Administrator of the Environmental Protection Agency, to be for short durations at infrequent intervals. A request for such a determination shall be made before the flight takes place.

(Secs. 231 and 301(a) of the Clean Air Act, as amended (42 U.S.C. 7571 and 7601(a))]

[FR Doc. 80-40622 Filed 12-30-80; 8:45 am]

BILLING CODE 6560-26-M

Federal Register

Wednesday
December 31, 1980

Part XIX

Office of Management and Budget

Office of Federal Procurement Policy

Research and Development Procurement; Control of Management Systems and Data Required of Contractors; Proposed Policy Letters

OFFICE OF MANAGEMENT AND BUDGET

Office of Federal Procurement Policy

Proposed Policy Letter on Federally Funded Research and Development Centers

AGENCY: Office of Federal Procurement Policy, OMB.

ACTION: A draft Office of Federal Procurement Policy (OFPP) policy letter on Federally Funded Research and Development Centers (FFRDCs) is being published for public review and comment.

SUMMARY: The proposed policy sets forth guidelines for the establishment, use, periodic review, and termination of FFRDCs. An order of precedence in alternatives for meeting the agencies' special technical needs is included: (1) use of the private sector; (2) use of in-house Government capabilities; (3) use of existing FFRDCs; and (4) establishment of a new FFRDC.

DATE: Comments must be received by February 20, 1981.

ADDRESS: Send comments to Mr. Fred H. Dietrich, Associate Administrator for Major System Acquisitions and Procurement Strategies, Office of Federal Procurement Policy, 726 Jackson Place, N.W., Washington, D.C. 20503.

FOR FURTHER INFORMATION CONTACT: Mr. Fred H. Dietrich, 202-395-6810.

SUPPLEMENTARY INFORMATION: The Commission on Government Procurement, in its 1972 report, included the following recommendation:

B-5 "Continue the option to organize and use FFRDCs to satisfy needs that cannot be satisfied effectively from other organizational resources. Any proposal for a new FFRDC should be reviewed and approved by the agency head and special attention should be given to the method of termination, including ownership of assets, when the need for the FFRDC no longer exists. Existing FFRDCs should be evaluated by the agency head periodically (perhaps every three years) for continued need."

In January 1977, as part of a proposed policy on research and development procurement, OFPP issued for informal comment a draft policy on FFRDCs to the agencies and to industry groups which had indicated an interest. The comments supported the need for such a policy and, as appropriate, are reflected in this draft policy letter.

The following is a list of the current FFRDCs arranged by the sponsoring agency (source: National Science Foundation):

Department of Defense

Office of the Secretary of Defense

Administered by non-profit institution:
- Institute for Defense Analyses (IDA)

Department of the Navy

Administered by universities:
- Center for Naval Analyses (University of Rochester)

Department of the Air Force

Administered by universities:
- Lincoln Laboratory (Massachusetts Institute of Technology)

Administered by non-profit institutions:
- Aerospace Corporation
- C^3 Division (MITRE Corporation)
- Project Air Force (RAND Corporation)

Department of Health and Human Services

National Institutes of Health

Administered by industrial firms:
- Frederick Cancer Research Center (Litton Bionetics, Inc., Litton Industries)

Department of Energy

Administered by industrial firms:
- Bettis Atomic Power Laboratory (Westinghouse Electric Corp.)
- Hanford Engineering Development Laboratory (Westinghouse Hanford Corp.)
- Oak Ridge National Laboratory (Union Carbide Corp.)
- Idaho National Engineering Laboratory (Aerojet Nuclear Corp.)
- Knolls Atomic Power Laboratory (General Electric Company)
- Liquid Metal Engineering Center (Rockwell International Corporation)
- Mound Laboratory (Monsanto Research Corp.)
- Sandia Laboratory (Western Electric Co., Inc.—Sandia Corp.)
- Savannah River Laboratory (E. I. duPont de Nemours & Co., Inc.)

Administered by Universities:
- Ames Laboratory (Iowa State University of Science and Technology)
- Argonne National Laboratory (University of Chicago and Argonne Universities Association)
- Brookhaven National Laboratory (Associated Universities, Inc.)
- E. O. Lawrence Berkeley Laboratory (University of California)
- E. O. Lawrence Livermore Laboratory (University of California)
- Fermilab (Universities Research Association, Inc.)
- Los Alamos Scientific Laboratory (University of California)
- Oak Ridge Institute of Nuclear Studies (Oak Ridge Associated Universities)
- Plasma Physics Laboratory (Princeton University)
- Stanford Linear Accelerator Center (Stanford University)

Administered by other non-profit institutions:
- Pacific Northwest Laboratory (Battelle Memorial Institute)
- Solar Energy Research Institute (Midwest Research Institute)

National Aeronautics and Space Administration

Administered by universities:
- Jet Propulsion Laboratory (California Institute of Technology)

National Science Foundation

Administered by universities:
- Cerro Tololo Inter-American Observatory (Association of Universities for Research in Astronomy, Inc.)
- Kitt Peak National Observatory (Association of Universities for Research in Astronomy, Inc.)
- National Astronomy and Ionosphere Center (Cornell University)
- National Center for Atmospheric Research (University Corporation for Atmospheric Research)
- National Radio Astonomy Observatory (Associated Universities, Inc.)
- Sacramento Peak Observatory (Association of Universities for Research in Astronomy, Inc.)

Karen Hastie Williams,
Administrator.
December 24, 1980.

OFPP Policy Letter 81—

December 24, 1980.

To the heads of executive departments and establishments.

Subject: Federally Funded Research and Development Centers.

1. *Purpose.* Government procurement policy should be uniform and consistent in application. This directive establishes Government-wide policies for the establishment, use, periodic review, and termination of Federally Funded Research and Development Centers (FFRDCs).

2. *Rescission.* Memorandum from the Chairman to the Members of the Federal Council for Science and Technology, dated November 1, 1967, which set forth criteria for identification of FFRDCs and the requirement for a master Government listing of these centers, is rescinded by this policy letter.

3. *Authority:* This policy letter is being issued pursuant to 41 U.S.C. 405, Sections 6d and 6h, which require final disposition of the Commission on Government Procurement

recommendations and authorize the issuance of policy directives.

4. *Background.* The Departments of Energy, Defense, and Health and Human Services, and the National Aeronautics and Space Administration and the National Science Foundation currently sponsor a total of 35 FFRDCs. In addition to these primary sponsors, many other departments and agencies utilize these FFRDEs. The contracts with the FFRDCs represent an estimated annual expenditure of $3 billion.

In 1967, a Government-wide policy for the identification and maintenance of a master listing of these FFRDCs was issued (reference paragraph 2—Rescission). In 1972, the Commission on Government Procurement recommended that guidance be provided on the establishment, use, periodic review and termination of FFRDCs. This policy is based on the executive branch consideration of the Commission's recommendation.

5. *Policy.*

a. Agencies will carefully consider alternatives for meeting their special technical needs before using an existing FFRDC or establishing a new FFRDC. Alternatives for meeting the agency needs shall be considered in the following order of precedence:

(1) Use of the private sector, including non-profit organizations.

(2) Use of in-house Government capabilities.

(3) Use of existing FFRDCs.

(4) Establishment of a new FFRDC.

b. Arrangements with FFRDCs which are also Government-owned, contractor-operated (GOCO) facilities will comply with the provisions of OMB Circular No. A-49.

c. Task assignments given to FFRDCs which are consulting services, as defined by OMB Circular No. A-120, will comply with the provisions of that Circular.

d. FFRDCs will not receive manufacturing or production tasks or contracts.

e. *Establishment of an FFRDC.* In establishing a new FFRDC, the principal sponsor shall ensure that:

(1) The alternatives in 5.a. for obtaining support of agency requirements cannot meet the needs.

(2) Before concluding that there is no other adequate performer available, the agency will place at least three notices over a 90-day period in the *Commerce Business Daily* and in the Federal Register soliciting identification of private sector performers.

(3) Agency efforts to find satisfactory private sector performers, especially small and minority-owned businesses, will include obtaining assistance from the Small Business Administration and the Domestic and International Business Administration in the Department of Commerce.

(4) There is sufficient Government expertise available to objectively and perceptively evaluate the work performed by the FFRDC.

(5) Controls are established to ensure that costs of services being provided to the Government are reasonable.

(6) The responsibility for capitalization has been defined in such a manner that ownership of assets may be readily and equitably determined upon termination of the FFRDC.

(7) The FFRDC will maintain currency in its field(s) of expertise.

f. *Sponsoring Agreements.* A contract shall be the only instrument used for transactions with FFRDCs. Long-term contract arrangements are encouraged to provide the continuity that will attract high quality personnel to the FFRDC, maintain its objectivity and independence, preserve familiarity with the principal sponsor's needs, and provide a quick response capability. The contract with an FFRDC shall include, as a minimum:

(1) Cost items on which advance agreements are to be negotiated; e.g., salary structure, depreciation, indirect costs, etc.

(2) Special factors affecting negotiation of fees; e.g., risks, use of Govenrment furnished property and facilities, etc.

(3) Criteria for the orderly termination of the contract and disposal of assets.

(4) A prohibition against the FFRDC soliciting work from any source and from competitively bidding for work.

g. *Use of an Existing FFRDC.* The principal sponsor will ensure that task assignments proposed for an existing FFRDC are within the scope of the contract, that the alternatives in 5.a. for obtaining support of agency requirements cannot meet the needs, and, if for consulting services, that the requirements of OMB Circular No. A-120 have been met.

h. *Use of an Existing FFRDC by an Agency Other than the Principal Sponsor.* When an agency has determined, in accordance with 5.a. and 5.d.(2), that the alternatives for obtaining support of agency requirements cannot meet the needs, it may request the principal sponsor to place the work with an existing FFRDC. If the principal sponsor concurs in the placing of the work with its FFRDC and the work is within the scope of the contract, task assignments can be given to the FFRDC. The principal sponsor will continue to be responsible for contract administratioan, but the other agency will be responsible for management of the specific work involved.

i. *Periodic Review.* Principal sponsors shall conduct comprehensive periodic reviews at least every three years of their use and need for the FFRDC(s). The annual planning and budget process and associated performance reviews of FFRDCs are not substitutes for the comprehensive period review. The head of the principal sponsor may approve the continuance of the FFRDC(s), if recommended by the periodic review. The periodic review will include:

(1) The examination of the agency's special technical needs to determine if they continue to exist.

(2) The examination of the preferred alternatives in 5.a. to meeting the agency's needs.

(3) The efficiency and effectiveness of the FFRDC in meeting the agency's needs.

(4) The adequacy of the FFRDC management in assuring a cost effective operation.

j. *Termination of an FFRDC.* When the principal sponsor's need for the FFRDC no longer exists, the sponsorship shall be phased out and the assets disposed of under the terms and conditions of the contract.

6. *Definitions*

a. A *Federally Funded Research and Development Center* is an organization established by the Federal Government to perform, analyze, integrate, support or administer research and development. FFRDCs exist to work for and operate under the direct monitorship of the principal sponsor. FFRDCs are not-for-profit organizations administered by universities, non-profit organizations, or industrial firms as an autonomous organization or an identifiable separate operating unit of a parent organization. FFRDCs have an average annual operation and capital equipment budget of at least $3 million.

b. *Principal Sponsor* means the executive agency which established and monitors an FFRDC and is responsible for contract administration of the contract with the FFRDC.

7. *Action Requirements*

a. Each agency head has the responsibility to ensure that the provisions of this policy are followed.

b. The principal sponsor will provide the Administrator of Federal Procurement Policy with a copy of the final report(s) of the comprehensive period reviews required by 5.i.

c. The principal sponsors will notify the National Science Foundation of the status of the FFRDCs.

d. The National Science Foundation will maintain the master Government list of FFRDCs.

8. *Information Contact.* All questions or inquiries should be submitted to the Office of Management and Budget, Administrator for Federal Procurement Policy, telephone 202-395-6810.

9. *Sunset Review Date.* This policy letter will be reviewed five years after its effective date for extension, modification, or rescission.

[FR Doc. 80-40675 Filed 12-30-80; 8:45 am]
BILLING CODE 3110-01-M

Proposed Policy Letter on Cost Sharing in Research and Development Contracts

AGENCY: Office of Federal Procurement Policy, OMB.

ACTION: A draft Office of Federal Procurement Policy (OFPP) policy letter on cost sharing in research and development contracts is being published for public review and comment.

SUMMARY: The proposed policy prohibits cost sharing in any form in Government research and development contracts. The proposed policy does not apply to assistance transactions (grants and cooperative agreements). This proposed policy should be reviewed in conjunction with the proposed OFPP policy letter on Recoupment of Research and Development Contract Costs.

DATE: Comments must be received by February 20, 1981.

ADDRESS: Send comments to Mr. Fred H. Dietrich, Associate Administrator for Major System Acquisitions and Procurement Strategies, Office of Federal Procurement Policy, 726 Jackson Place, N.W., Washington, D.C. 20503.

FOR FURTHER INFORMATION CONTACT: Mr. Fred H. Dietrich, 202-395-6810.

SUPPLEMENTARY INFORMATION: One of the first statutory requirements for cost sharing was the limitation placed on indirect costs for research grants in the Labor-Health, Education and Welfare (HEW) Appropriations Act for fiscal year 1958. This enacted into law the 15% limitation previously applied by agency policy.

The statutory indirect cost limit was raised to 20% for fiscal year 1963, and the Labor-HEW Appropriations Act for fiscal year 1966 substituted a clause which has been used each succeeding year:

"None of the funds provided herein shall be used to pay any recipient of a grant for the conduct of a research project an amount equal to as much as the entire cost of the project."

In 1970, cost sharing was legislatively introduced (Appropriation Act for the Independent Offices and Housing and Urban Development) as applicable to some contracts as well as grants:

"None of the funds provided in this Act may be used for payment, through grants or contracts, to recipients that do not share in the cost of conducting research resulting from proposals for projects not specifically solicited by the Government: provided that the extent of cost sharing by the recipient shall reflect the mutuality of interest of the grantee or contractor and the Government in research."

This language governed such agencies as the National Aeronautic and Space Administration and National Science Foundation, but Health and Human Services (HHS) is the agency covered by prior language in this appropriation act. In the absence of statutory requirements, Department of Defense observed the language applicable to HHS. The Atomic Energy Commission, while not subject to statutory requirement for cost sharing, required cost sharing in most of its research support agreements.

The Office of Management and Budget (OMB) issued Circular No. A-100, replacing Circular No. A-74, expanding cost sharing to research contracts as well as grants and making the requirements of the 1970 Appropriation Act for the Independent Offices and HUD applicable to all executive agencies for unsolicited proposals. In December 1973, General Services Administration Federal Management Circular (FMC) 73-3 superseded OMB Circular A-100 with essentially the same requirements. The Commission on Government Procurement in its report of December 1972, recommended:

"Eliminate cost sharing on R&D projects except in cases where the performer of the project would clearly benefit; e.g., through economic benefits on commercial sales. Decisions with respect to the placement of R & D contracts or grants should not be influenced by potential cost sharing except where cost competition is a factor."

In June 1973, an interagency task group was established to consider the Commission's recommendation. This task group recommended in its February 1974 report:

"Eliminate mandatory cost sharing on R&D projects provided, however, that sharing may be required in cases where the performer would clearly benefit from commercial sales as a result of performance of the research and development. Decisions with respect to the placement of R&D awards should not be influenced by potential cost sharing except where cost competition is a factor."

Subsequent review by 27 agencies resulted in 8 concurrences, 9 nonconcurrences, one conditional concurrence and 2 abstentions. As a result, the task group was reconstituted to reconsider the proposed position. In December 1974, the task group recommended:

"Cost participation on research and development projects may be encouraged or required at the discretion of individual agencies, as deemed in the best interest of the Government. Such participation is subject to statutory or interagency guidelines. Statutory cost participation not directed to specific agency programs or projects should be eliminated."

This December 1974 report of the task group was distributed for private sector comments only since agency views had already been obtained. Strong oppositiion was expressed from both commercial and nonprofit performer organizations.

The interagency task group was reconstructed and reconstituted to once again reconsider the proposed position. In January 1976, the task group recommended:

"Cost participation under any R&D agreement shall not be imposed except as set forth below:

a. Cost participation shall be implemented when required by statute.

b. Cost participation may be imposed at the option of the agency when there is a high probability that the performer will receive a significant present or future benefit as a direct result of the performance effort."

In the January 1976 report, the task group further defined cost participation as follows:

"*Cost participation* is a generic term denoting any situation where the Government does not fully reimburse the performer for all allowable costs, profits, or fees associated with the specified effort. The term encompasses cost sharing, cost matching, cost limitation (direct or indirect) and similar phrases. Cost participation may be in any form, including, but not limited to, cash, personal property or services, or real property or interest therein, needed for the project, the value of which shall be established by mutual agreement between the agency and the performer."

OFPP Policy Considerations

—The attitude of having a contractor share in costs when benefits are expected from the performance could easily lead to cost sharing on all Federal R&D contracts. This is not the Government's intent.

—Obtaining an agreement which is in the best interest of the Government does not mean the least immediate cost to the Government.

—Discouraging contractors from doing business with Government is a concern.

—Cost sharing does not include all forms of cost limitations or disallowances, many of which are

covered in regulations on cost principles.

—Solicited versus unsolicted proposals. Many believe cost sharing is appropriate for unsolicted proposals, even though the agency may well desire to procure the R&D effort proposed to meet the agency's missions. Consideration is not always given to encouraging contractors to present alternatives to meeting agency missions.

—Procurement with small R&D firms. If cost sharing were to continue to be imposed when the Government is procuring research and development for its use, small R&D firms would continue to be excluded from these procurements because only the larger firms may be able to afford to accept the imposition of cost sharing in this situation.

The Commission observed the philosophical difference in *supporting* research and *procuring* research. Agencies such as DOD, NASA and Federal Aviation Administration procure R&D, while other agencies such as the Department of Energy both procure and support R&D. Agencies such as Urban Mass Transportation Administration, National Institute of Health, and NSF are in a predominately R&D support role. Public Law 95–224 provides statutory distinction between "assistance" (supporting) and "procurement" transactions.

The Commission was clear that sharing should not be imposed when the agencies are procuring R&D, but may be imposed if the Government is assisting the performer. The Commission also recognized that voluntary cost sharing, however justified, should not be eliminated, but controlled. For example, known voluntary cost sharing would not be in the best interest of the Government when the Government is procuring R&D products or services for Government use because, in effect, it would be condoning a "buy-in." Existing procurement policies do not condone "buy-ins."

The proposed policy does not permit cost sharing in contracts. However, the prohibition of cost sharing by the contractor when an agency is procuring R&D products or services for its use and when there is a clear potential benefit to the contractor through commercial sales is being counterbalanced in the proposed policy on recoupment.

In January 1977, as part of a proposed policy in research and development procurement, OFPP issued for informal comment a draft policy on cost sharing to the agencies and to industry groups which had indicated an interest. Appropriate revisions have been incorporated in the proposed policy based on the comments received.

Karen Hastie Williams,

Administrator.

December 24, 1980.

December 24, 1980.

OFPP Policy Letter 81—

Heads of Executive Departments and Establishments.

Subject: Cost Sharing in Research and Development Contracts.

1. *Purpose.* Government procurement policy should be uniform and consistent in application. This directive prohibits cost sharing in any form in research and development contracts.

2. *Rescission.* The provisions of Federal Management Circular (FMC) No. 73–3, "Cost Sharing on Federal Research," dated December 4, 1973, which relate to contracting, are rescinded by this policy letter.

3. *Authority.* This policy is being issued pursuant to 41 U.S.C. 405, Sections 6d and 6h, which require final disposition of the Commission on Government Procurement recommendations and authorize the issuance of policy directives.

4. *Background.* The Commission on Government, in its 1972 report, recommended that recoupment of research and development contract costs be prohibited and that cost sharing be used in research and development contracts when there was a clear potential of commercial benefit. However, in August 1974, the Council on International Economic Policy, with the President's concurrence, issued Decision Memorandum 23, which requires recoupment on Government-owned and financed technologies and products when they are sold to non-U.S. Government buyers, both domestic and foreign.

By requiring recoupment (see OFPP Policy Letter 81—) but prohibiting cost sharing, the intent of the Commission's recommendation for repayment to the Government of sponsored research and development is being met.

5. *Policy.* Agencies shall ensure that for research and development (R&D) contracts, the funds, scope of work, and evaluation criteria are in balance. Cost sharing shall not be imposed on or permitted by an agency in R&D contracts.

6. *Definitions.* See OMB Circular No. A–11, Section 44, for definitions of research and development.

7. *Action Requirements.*

a. Each agency head has the responsibility to ensure that the provisions of this policy are followed.

b. Copies of agency implementation will be sent to the Administrator for Federal Procurement Policy.

8. *Information Contact.* All questions or inquiries should be submitted to the Office of Management and Budget, Administrator for Federal Procurement Policy, telephone 202–395–6810.

9. *Sunset Review Date.* This policy letter will be reviewed, in conjunction with OFPP Policy Letter 81—, "Recoupment of Research and Development Contract Costs," five years after its effective date for extension, modification, or rescission.

[FR Doc. 80-40676 Filed 12-30-80; 8:45 am]

BILLING CODE 3110-01-M

Proposed Policy Letter on Recoupment of Research and Development Contract Costs

AGENCY: Office of Federal Procurement Policy, OMB.

ACTION: A draft Office of Federal Procurement Policy (OFPP) policy letter on recoupment of research and development contract costs is being published for public review and comment.

SUMMARY: The proposed policy sets forth guidelines for the financial repayment to the Government of part or all the Government funded research and development costs of contracts leading to products or services that are sold to buyers other than the Government. This proposed policy should be reviewed in conjunction with the proposed OFPP policy letter on Cost Sharing in Research and Development Contracts.

DATE: Comments must be received by February 20, 1981.

ADDRESS: Send comments to Mr. Fred H. Dietrich, Associate Administrator for Major System Acquisitions and Procurement Strategies, Office of Federal Procurement Policy, 726 Jackson Place, N.W., Washington, D.C. 20503.

FOR FURTHER INFORMATION CONTACT: Mr. Fred H. Dietrich, 202–395–6810.

SUPPLEMENTARY INFORMATION: During late 1973 and the first half of 1974, the Council on International Economic Policy conducted a study which resulted in a recommendation that recoupment be sought on Government-owned and financed technologies and products when these are proposed for sale to non-U.S. Government buyers. The President reviewed the issue and approved the Council's recommendations. On August 2, 1974, the Executive Director of the Council issued Decision Memorandum 23, setting forth the policy.

Council on International Economic Policy Decision Memorandum 23

requires that recoupment will be sought on Government-owned and financed technologies and products when these are proposed for sale to non-U.S. Government buyers. Further, it requires that recoupment will:

(1) Be disigned to achieve a return on Government investment and not to arbitrarily limit transfers of technology to foreign nations;

(2) Entail proportionate (i.e., pro rata) cost recovery on product sales;

(3) Allow a fair market recovery on technology sales, execution to be predicated on a satisfactory determination of fair market pricing policy and procedures; and

(4) Allow reasonable agency flexibility and discretion in implementation, permitting exceptions because of national security, foreign policy and overriding public interest.

OMB had the responsibility to provide implementation guidance to the agencies for this policy. In the process of developing the guidance, OMB found that the application of the policy was very complex because of potential legitimate reasons for granting exceptions in certain cases involving national secuity, foreign policy, and the general public interest. Therefore, on April 15, 1975, OMB requested that the Federal Coordinating Council for Science and Technology assist in development of the needed criteria and guidelines. In May 1975, NSF's Office of National Research and Development Assessment provided a white paper entitled, "Recoupment of Government R&D Expenditures: Issues and Practices." This paper was used by the Federal Coordinating Council for Science and Technology in developing the recoupment guidelines.

On June 29, 1976, the Chairman of the Federal Coordinating Council for Science and Technology distributed to the agencies and OFPP/OMB the guidelines requested by OMB. OFPP was assigned the responsibility to provide the uniform Government-wide procurement policy.

The Commission on Government Procurement, in its December 1972 report, recommended:

"Eliminate recovery of R&D costs from Government contractors and grantees except under unusual circumstances approved by the agency head."

On September 16, 1974, the interagency task group established by OMB to develop the executive branch position on the Commission's recommendation, recommended rejection of the Commission's recommendation in favor of the Council on International Economic Policy Decision Memorandum 23. In October 1974, the task group's position was adopted as the executive branch position and notice to this effect was published in the Federal Register.

The Councils' recommendation and executive branch position on the Commission recommendation are reflected in the proposed policy.

In January 1977, as part of a proposed policy on research and development procurement, OFPP issued for informal comment a draft policy on recoupment to the agencies and to industry groups which had indicated an interest. Appropriate revisions have been incorporated in the proposed policy based on the comments received.

It is recognized that the Departments of Defense and Energy, and the National Aeronautics and Space Administration have issued implementing instructions on recoupment.

Karen Hastie Williams,

Administrator.

December 24, 1980.

December 24, 1980.

OFPP Policy Letter 81——

To the heads of executive departments and establishments.

Subject: Recoupment of Research and Development Contract Costs.

1. *Purpose.* Government procurement policy should be uniform and consistent in application. This directive establishes Government-wide policies for the recoupment of research and development contract costs.

2. *Authority.* This policy letter implements Council on International Economic Policy Decision Memorandum 23 of August 2, 1974, and is issued pursuant to 41 U.S.C. 405, Section 6h, which authorizes the issuance of policy directives.

3. *Background.* The Commission on Government Procurement, in its 1972 report, recommended that recoupment of research and development contracts costs be prohibited and that cost sharing be used in research and development contracts when there was a clear potential of commercial benefit. In August 1974, the Council on International Economic Policy, with the President's concurrence, issued Decision Memorandum 23, which requires recoupment on Government-owned and financed technologies and products when these are sold to non-U.S. Government buyers, both domestic and foreign.

By requiring recoupment but prohibiting cost sharing (see OFPP Policy Letter 81——, the intent of the Commission's recommendation for repayment to the Government of sponsored research and development is being met.

Council on International Economic Policy Decision Memorandum 23 specified that recoupment will:

—Be designed to achieve a return on Government investment and not to arbitrarily limit transfers of technology to foreign nations;

—Entail proportionate (i.e., pro rata) cost recovery on product sales;

—Allow a fair market recovery on technology sales, execution to be predicated on a satisfactory determination of fair market pricing policy and procedures; and

—Allow reasonable agency flexibility and discretion in implementation, permitting exceptions because of national security, foreign policy, or overriding public interest.

In April 1975, OMB requested that the Federal Coordinating Council for Science and Technology assist in development of the needed criteria and guidelines. In June 1976, the Council provided the requested guidelines and OFPP was assigned implementing responsibility.

4. *Policy*

a. Agencies will consider recoupment of research and development (R&D) contract costs from a for-profit contractor when:

(1) The R&D contract is for $10 million or more;

(2) There is a clear potential commercial sales benefit to the contractor; and

(3) None of the conditions cited under 4.b. exist.

b. Recoupment of R&D contract costs will not be sought when:

(1) The contracted R&D effort involves basic research, applied research or technology development in the technology base;

(2) Recoupment would conflict with agency responsibilities for exchange and dissemination of information and encouragement of widespread use of the technology, or is prohibited by statute;

(3) The administrative costs of recoupment are likely to be greater than the amount recouped;

(4) Recoupment would conflict with important overriding concerns of national policies, such as national security, foreign policy, trade balance, employment, loss of Federal taxes, or other public considerations;

(5) R&D expenditures are being supported by joint agreement with other countries and recoupment would cause discrimination against U.S. contractors; or

(6) The Government has no contractural or other rights in the

particular products, service, or technology.

c. Recoupment is not a product value tax; it is cost allocation derived from a pro rata cost distribution. Recoupment will normally be made by determining the Government contract costs for R&D, estimating expected sales, and establishing a pro rata amount per item by distributing total costs to be recouped over expected sales. This allocation may be made after the R&D has been accomplished and commercial possibilities become apparent, provided the rights of the Government to do so are established in the R&D contract. Where a pro rata approach is infeasible, a percent of the sales price for a product may be established in the recoupment amount.

5. *Definitions.* See OMB Circular No. A-11, Sections 44 and 55, for definitions of basic research, applied research, technology development, technology base, and development.

6. *Action Requirements*

a. Each agency head has the responsibility to ensure that the provisions of this policy are followed.

b. Copies of agency implementation will be sent to the Administrator for Federal Procurement Policy.

7. *Information Contact.* All questions or inquiries should be submitted to the Office of Management and Budget, Administrator for Federal Procurement Policy, telephone 202-395-6810.

8. *Sunset Review Date.* This policy letter will be reviewed, in conjunction with OFPP Policy Letter 81-—, "Cost Sharing in Research and Development Contracts," five years after its effective date for extension, modification, or rescission.

[FR Doc. 80-40677 Filed 12-30-80; 8:45 am]
BILLING CODE 3110-01-M

Proposed Policy Letter on Control of Management Systems and Data Required of Contractors

ACTION: A draft Office of Federal Procurement Policy (OFPP) policy letter on Control of Management Systems and Data Required of Contractors is being published for public review and comment.

SUMMARY: The proposed policy would require agencies to establish a central control function to assure that all contractually required management system criteria and data requirements are cost beneficial. The agencies would develop authorized lists of such requirements, and future solicitations and contracts would have these requirements specified on specially designed forms for that purpose. The intent of the proposed policy is to significantly reduce the expense to the Government of these contractually imposed requirements by reducing the expense to the contractors.

DATE: Comments must be received by February 20, 1981.

ADDRESS: Send comments to: Mr. Fred H. Dietrich, Associate Administrator for Major System Acquisitions and Procurement Strategies, Office of Federal Procurement Policy, 726 Jackson Place, N.W., Washington, D.C. 20503.

FOR FURTHER INFORMATION CONTACT: Mr. Fred H. Dietrich, 202-395-6810.

SUPPLEMENTARY INFORMATION: The Commission on Government Procurement, in its 1972 report, included the following recommendations:

A-33 "Establish standards and criteria for estimating costs and benefits of product data requirements. The need for product data should be determined on the basis of cost-benefit analyses. Selective after-the-fact reviews should be used as a basis for eliminating unnecessary requirements."

A-34 "Establish Government-wide criteria for management systems which are prescribed for use by contractors, including standards for determining mission-essential management data requirements."

An interagency task group was established to consider the executive branch position on these recommendations. The task group recommended acceptance of the recommendations and the policy implementation was assigned to OFPP. In April 1978, OMB issued for comment a draft policy to the agencies and to industry groups which had indicated an interest. The comments generally supported the approach in the proposed policy letter contained herein.

A number of agencies, however, requested more detailed procedural guidance on how to effect the proposed controls. Because of the uniqueness of agency missions and to be consistent with the proposal policy, it has been determined that the policy direction should specify what is needed, not how each agency will accomplish the requirements. The agency submittals of detailed implementation plans to OFPP will provide an opportunity to share these plans among agencies. Additionally, OFPP is available to work with the agencies to resolve any questions of implementation.

It has been determined, however, in order to meet the objective of providing one face to industry across the executive branch, to direct the use of standard contract forms to be used in solicitations and contracts to identify the agencies requirements. These are included as Attachments B, C, and D to the proposed policy letter.

A number of agencies also questioned the inclusion of design analyses and test data as nonproduct data. It is intended to separate the data which provides configuration, identification, use instruction, and maintenance instruction of end products from the other data acquired. This product data is acquired for different reasons than other (nonproduct) data and requires Government inspection upon delivery which is not required of nonproduct data. It is recognized that there has been a traditional reference to "technical" and "non-technical" data. However, that distinction does not apply. While such data as design analyses and test data can be characterized as technical data, they are acquired for management decision purposes and do not define end products and are, therefore, nonproduct data in the proposed policy.

This proposed policy letter should be considered as an interim action in implementing the proposed Uniform Procurement System submitted by OFPP to Congress in October 1980. This action is in accordance with the schedule shown on page 38 of OFPP's Report to the Congress, "On the Commission on Government Procurement Recommendations," dated October 1980.

Formal coordination with the heads of the agencies will be accomplished after receipt of comments and appropriate revisions have been incorporated.

Karen Hastie Williams,
Administrator.
December 24, 1980.
December 24, 1980.

OFPP Policy Letter 81—

To the heads of executive departments and establishments.

Subject: Control of Management System Criteria and Data Required of Contractors.

1. *Purpose.* Government procurement policy should be uniform and consistent in application. This directive establishes Government-wide policies to control the development and application of contractually specified management system criteria and product and nonproduct data in the acquisition of goods and services.

2. *Authority.* This policy letter is being issued pursuant to 41 U.S.C. 405, Sections 6d and 6h, which require final disposition of the Commission on Government Procurement recommendations and authorized the issuance of policy directives.

3. *Background.* Government contracts for goods and services frequently

specify management systems to be used by contractors in performance of the contracts. Additionally, records are required to be kept, nonproduct data to be submitted, and product data retained or submitted. While the cost of such requirements varies significantly among individual procurements, the total annual cost on all procurements has been estimated to be billions of dollars. Although some of these requirements are essential, a system of checks and balances is needed to ensure that such requirements are necessary, that management system criteria rather than management systems are used, and that such requirements are coordinated and compatible. The system set forth here is illustrated in Attachment A to this policy letter.

The Commission on Government Procurement recommended more effective control over the selection and imposition of such management systems and data requirements. This policy is based on executive branch consideration of the Commission's recommendations.

4. *Policy*

a. The Federal Government relies on the private sector to provide needed goods and services (see OMB Circular A-76). Agencies should minimize specific instructions to the contractor on methods to be employed in the performance of the contract. Specifically, when agencies must impose such requirements, they will specify their management system criteria, requirements for product data and nonproduct data, and the required standards for accuracy and timeliness in a manner that allows the contractor flexibility in selecting the management systems and other tools used to satisfy these requirements.

b. Agencies will control the development and application of management system criteria, product data requirements, and nonproduct data requirements used or intended for use in more than one procurement. Agencies will establish and maintain a list(s) of approved management system criteria, product data requirements, and nonproduct data requirements, and assure that unauthorized requirements are not used in procurements. Agencies will verify that there is a demonstrated need for each specific management system criteria, product data requirement, and nonproduct data requirement and that they are cost beneficial before approving them for use and inclusion on the authorized list(s).

c. Agencies will assure compatibility among management system criteria, product data requirements, and nonproduct data requirements and make maximum use of uniform terminology and classification. Intra-agency coordination is mandatory and interagency coordination is encouraged to reduce the expense to the Government incurred by placing differing and incompatible requirements on contractors doing business with several agencies or agency components.

d. For individual procurements, the Government program manager or contracting officer will: (1) identify the Government requirements for management system criteria, nonproduct data and product data in the solicitation using the forms contained in Attachments B, C, and D; (2) request contractors to propose how the requirements will be met; and (3) encourage contractors to recommend alternatives to the stated requirements. The Government program manager, or when no program manager has been designated, the contracting officer will tailor the application of management system criteria, product data requirements, and nonproduct data requirements to the specific needs of individual procurements, taking into consideration the objective of the procurement, the type of contract, the Government's needs, practical utility, the contractor's proprietary interests, the contractor's proposal, and the necessary form and depth of Government management control (prior approval of proposed contractor actions, surveillance, or visibility). Approval of management system criteria, a product data requirement, or a nonproduct data requirement for general use shall not relieve the Government program manager or contracting officer from tailoring the requirement to a specific procurement. In major system acquisitions (reference OMB Circular No. A-109) the contractors will be required to recommend the tailoring of these requirements as part of their alternative system design concept proposals and subsequent proposals throughout the acquisition process.

e. Agencies will not mandate specific management systems for use by contractors. Only approved management system criteria will be specified in contracts. Selected requirements will be specified on Form ——— (see Attachment B). Contractors will be provided the flexibility to select the management systems and other tools they use to satisfy these requirements.

f. Agency product data and nonproduct data requirements will permit the use of contractors' formats whenever possible. Only approved product data and nonproduct data requirements may be specified in contracts. Selected requirements will be specified on Form ——— (see Attachment C) and on Form ——— (see Attachment D).

g. Consideration should be given to have the contractor be a product data repository for the Government.

h. A firm commitment to procure product data will, whenever practicable, be deferred until the time an actual need is identified. The intention to procure product data will, however, be identified in the solicitation and subsequent contract. Delivery of product data will be scheduled so as to be within the time frame when the data are normally generated by the contractor.

i. The price of and rights to product data will be negotiated at the time of contracting, where circumstances permit identification of the requirements at that time. In any event, the price and rights will be negotiated no later than the time they are ordered.

j. Agency nonproduct data requirements covered by OMB Circular No. A-40 shall conform to the provisions of that Circular.

5. *Definitions*

a. *Management system* is a term used to identify management tools which are employed to assist managers in: (1) defining or stating policy, objectives, criteria, and requirements; (2) assigning responsibility; (3) achieving efficient and effective utilization or resources; (4) periodically measuring performance; (5) comparing that performance against stated objectives and requirements; and (6) taking appropriate action. A management system may encompass part or all of the above areas.

b. *Management system criteria* means the contractual document which specifies the required output and performance standards but does not specify detailed procedures or methods of accomplishment. Management system criteria may require generation, preparation, maintenance, analysis, evaluation, display, and dissemination of information.

c. *Product data requirement* means a documented contract requirement which directs contractors to collect, organize, prepare, maintain, transmit, deliver or retain information incident to the design, development, production, operation, preservation, maintenance or repair of contract end items. Product data include engineering drawings, product specifications and standards, part breakdown lists, catalog item identifications, operation and/or maintenance instructions, descriptions of product physical qualities and characteristics, computerized product definition media, and reprocurement data.

Note.—Products, including computer programs and software, are excluded from this policy.

d. *Nonproduct data requirement* means a documented contract requirement which directs contractors to collect, organize, prepare, maintain, transmit, deliver, or retain information, plans or reports other than product data. Nonproduct data include financial and administrative reports, progress reports, design analyses, test data, configuration management reports, engineering change proposals, and other such business and technical management information. *Note:* The final report of a study contract is excluded as a data requirement in this policy.

e. *Tailoring* means the careful selection from a list of approved requirements of only those management system criteria, product data, and nonproduct data requirements which are essential for application to each individual solicitation or contract.

6. *Action Requirements*

a. Each agency head has the responsibility to ensure that the provisions of this policy are followed.

b. This policy letter applies to agency or interagency regulations or other issuances included in purchase solicitations or contracts that; (1) directly or indirectly specify management system criteria for use by contractor; (2) specify product data or nonproduct data required by the Government from the contractor; or (3) establish standards of accuracy and timeliness for the specified data. Nothing in this policy supersedes or modifies the provision of OMB Circular A-40.

c. All agencies will work closely with the Office of Federal Procurement Policy in resolving implementation problems. Existing agency documents may need to be revised, consolidated or cancelled to assure that only management system criteria are specified and that product data and nonproduct data requirements meet the provisions of this policy.

d. Agencies will submit the following to the Office of Federal Procurement Policy, OMB:

(1) Within six months after the date of this document, a time-phased action plan for meeting the requirements of this policy.

(2) Implementing policy directives, regulations and guidelines as they are issued.

7. *Information Contact.* All questions or inquiries should be submitted to the Office of Management and Budget, Administrator for Federal Procurement Policy, telephone (202) 395-6810.

8. *Sunset Review Date.* This policy letter will be reviewed five years after its effective date for extension, modification, or rescission.

BILLING CODE 3110-01-M

ATTACHMENT A

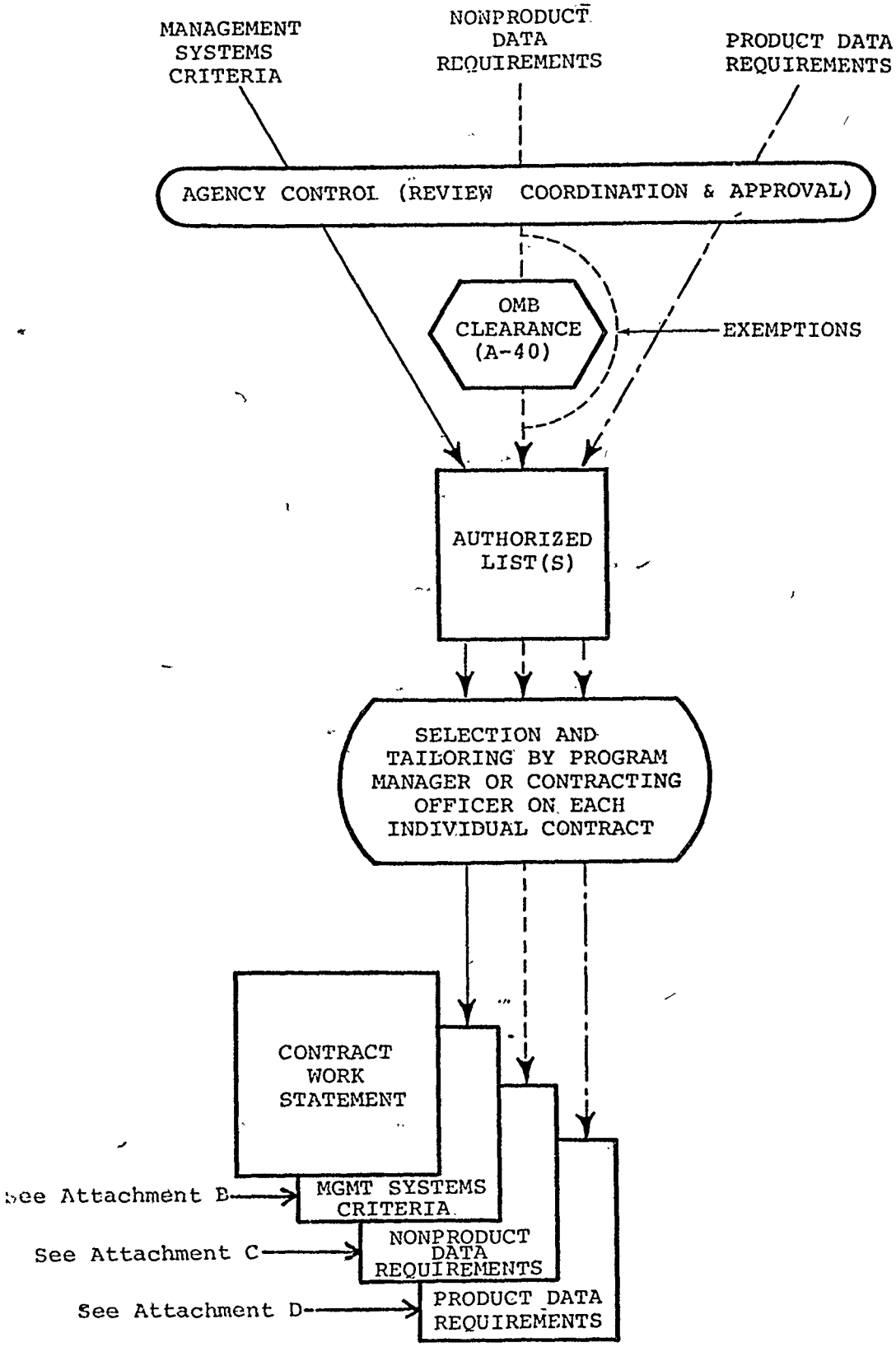

ATTACHMENT B

MANAGEMENT SYSTEMS CRITERIA LIST	SOLICITATION CONTRACT NUMBER

1 ENTRY	2 DOCUMENT NUMBER	3 DATE	4 TITLE
5 DATA REFERENCES (Title)			
6 REMARKS			

1 ENTRY	2 DOCUMENT NUMBER	3 DATE	4 TITLE
5 DATA REFERENCES (Title)			
6 REMARKS			

1 ENTRY	2 DOCUMENT NUMBER	3 DATE	4 TITLE
5 DATA REFERENCES (Title)			
6 REMARKS			

1 ENTRY	2 DOCUMENT NUMBER	3 DATE	4 TITLE
5 DATA REFERENCES (Title)			
6 REMARKS			

1 ENTRY	2 DOCUMENT NUMBER	3 DATE	4 TITLE
5 DATA REFERENCES (Title)			
6 REMARKS			

PREPARED BY (Name and Title)	DATE	PREPARED BY (Name and Title)	DATE

PAGE OF PAGES

ATTACHMENT C

CONTRACT NONPRODUCT REQUIREMENTS LIST

SOLICITATION CONTRACT _____ CONTRACTOR _____

1 SEQUENCE NUMBER	2 TITLE OR DESCRIPTION OF DATA + SUBTITLE	6 OFFICE	9 FREQUENCY	11 DATE OF 1ST SUBMISSION	13 DISTRIBUTION AND ADDRESSES (Addressee Regular Copies Repro Copies)
4 AUTHORITY (Data Item Number)	5 CONTRACT REFERENCE	7 ADP CODE A / 8 INPUT TO IAC X	10 AS OF DATE	12 DATE OF SUBSEQUENT SUBMISSION EVENT D	
1	2	6	9	11	13
4	5	7 / 8	10	12	
REMARKS					14 TOTAL
1	2	6	9	11	13
4	5	7 / 8	10	12	
REMARKS					14 TOTAL
1	2	6	9	11	13
4	5		10	12	
REMARKS					14 TOTAL
1	2	6	9	11	13
4	5	7 / 8	10	12	
REMARKS					14 TOTAL

15 CONTRACTOR FILE DOCUMENT NUMBER
16 ESTIMATED NUMBER OF PAGES
17 PRICE GROUP
18 ESTIMATED TOTAL PRICE
15
16
17
18
15
16
17
18
15
16
17
18
15
16
17
18
CONTRACT VALUE

PREPARED BY	DATE	APPROVED BY	DATE

PAGE OF PAGES

INSTRUCTIONS FOR COMPLETING FORM (NON-PRODUCT DATA)

FOR GOVERNMENT PERSONNEL

This form shall be used whenever data is required to be delivered under a contract. The form (*except Items 15 through 18*) shall be completed in accordance with Departmental procedures, and furnished to the contracting officer by the personnel responsible for determining the data requirements of the contract.

FOR THE CONTRACTOR

1. The estimated prices filled in in Item 18 will not be separately used in evaluation of offers

2. Each offeror may complete Items 15 and 16 in accordance with the following instructions:

Item 15 Contractor File/Document Number — Enter bidder's or offeror's internal filing or document number, if applicable.

Item 16 Estimated Number of Pages — Enter the estimated number of pages, drawings, etc., for single preparation

3. Each offeror shall complete Items 17 and 18 in accordance with the following instructions (*this does not apply to advertised contracts or to negotiated contracts under $100,000*)

Item 17 Price Group — Contractors shall specify one of the four following groups of effort in developing estimated prices for each items of data listed on the Form.

a. Group I Definition — Data which is not otherwise essential to the contractor's performance of the primary contracted effort (*production, development, testing, and administration*) but which is required by Form

Estimated Price — Costs to be considered under Group I are those applicable to preparing and assembling the data item in conformance with Government requirements, and the administrative and other expenses related to reproducing and delivering such data items to the Government

b. Group II Definition — Data which is essential to the performance of the primary contracted effort but the contractor is required to perform additional work to conform to Government requirements with regard to depth of content, format, frequency of submittal, preparation, control or quality of the data item

Estimated Price — Costs to be considered under Group II are those incurred over and above the cost of the essential data item without conforming to Government requirements, and the administrative and other expenses related to reproducing and delivering such data item to the Government.

c. Group III. Definition — Data which the contractor must develop for his internal use in performance of the primary contracted effort and does not require any substantial change to conform to Government requirements with regard to depth of content, format, frequency or submittal, preparation, control and quality of data.

Estimated Price — Costs to be considered under Group III are the administrative and other expenses related to reproducing and delivering such data item to the Government.

d. Group IV. Definition — Data which is developed by the contractor as part of his normal operating procedures and his effort in supplying these data to the Government is minimal

Estimated Price — Group IV items should normally be shown on the Form at no cost.

Example for Group IV — A brochure or short manual used in a company's normal commercial business, that is acquired by the Government in such small quantities that cost of determining a charge would not be practical

Item 18. Estimated Total Price.

a. For each item of data listed, the bidder or offeror shall enter an amount equal to that portion of the total price which is estimated to be attributable to the production or development for the Government of that item of data These estimated data prices shall be developed only from those costs which will be incurred as a direct result of the requirement to supply the data, over and above those costs which would otherwise be incurred in performance of the contract if no data were required

b. The estimated data prices shall not include any amount for rights in data The Government's right to use the data shall be governed by the pertinent provisions of the contract

ATTACHMENT D

CONTRACT PRODUCT REQUIREMENTS LIST

SOLICITATION CONTRACT _____ CONTRACTOR _____

SEQUENCE NUMBER	TITLE OR DESCRIPTION OF DATA	OFFICE	FREQUENCY	DATE OF FIRST SUBMISSION	DISTRIBUTION AND ADDRESSES (Addresses, Regular Copies, Repro Copies)	CONTRACTOR'S DOCUMENT NUMBER
	AUTHORITY (Data Item Number) / CONTRACT REFERENCE	APP CODE A / INPUT TO PACX	AS OF DATE	DATE OF SUBSEQUENT SUBMISSION EVENT D		ESTIMATED NUMBER OF PAGES / PRICE GROUP / ESTIMATED TOTAL PRICE
REMARKS					TOTAL	
REMARKS					TOTAL	
REMARKS					TOTAL	
REMARKS					TOTAL	

PREPARED BY | DATE | APPROVED BY | DATE | CONTRACT VALUE

PAGE OF PAGES

INSTRUCTIONS FOR COMPLETING FORM (PRODUCT DATA)

FOR GOVERNMENT PERSONNEL

This form shall be used whenever data is required to be delivered under a contract. The form (*except Items 15 through 18*) shall be completed in accordance with Departmental procedures, and furnished to the contracting officer by the personnel responsible for determining the data requirements of the contract

FOR THE CONTRACTOR

1 The estimated prices filled in in Item 18 will not be separately used in evaluation of offers

2 Each offeror may complete Items 15 and 16 in accordance with the following instructions:

Item 15 Contractor File/Document Number — Enter bidder's or offeror's internal filing or document number, if applicable

Item 16 Estimated Number of Pages — Enter the estimated number of pages, drawings, etc., for single preparation.

3 Each offeror shall complete Items 17 and 18 in accordance with the following instructions (*this does not apply to advertised contracts or to negotiated contracts under $100,000*)

Item 17 Price Group - Contractors shall specify one of the four following groups of effort in developing estimated prices for each item of data listed on the Form

a. Group I Definition — Data which is not otherwise essential to the contractor's performance of the primary contracted effort (*production, development, testing, and administration*) but which is required by Form

Estimated Price — Costs to be considered under Group I are those applicable to preparing and assembling the data item in conformance with Government requirements, and the administrative and other expenses related to reproducing and delivering such data items to the Government

Example for Group I — A technical manual prepared for Government use only The estimated price of the manual would be noted on the Form exclusive of cost for any of the manual material that had been generated for other purposes.

b Group II Definition — Data which is essential to the performance of the primary contracted effort but the contractor is required to perform additional work to conform to Government requirements with regard to depth of content, format, frequency of submittal, preparation, control or quality of the data item

Estimated Price — Costs to be considered under Group II are those incurred over and above the cost of the essential data item without conforming to Government requirements, and the administrative and other expenses related to reproducing and delivering such data item to the Government

Example for Group II — In the case of *drawings to Government standards* the estimated price of the data item begins only after the engineering and manufacturing information has been developed and the final form original drawings have been initiated The estimated price shall not include the cost of configuration control, but shall include any additional quality assurance and control of the drawings but not related to engineering configuration control. Not to be considered is "design effort" expended on layout drawings and other data which serve principally as a medium for developing design and are not used in manufacture, production or test of the end item.

c. Group III Definition — Data which the contractor must develop for his internal use in performance of the primary contracted effort and does not require any substantial change to conform to Government requirements with regard to depth of content, format, frequency or submittal, preparation, control and quality of data.

Estimated Price — Costs to be considered under Group III are the administrative and other expenses related to reproducing and delivering such data item to the Government

Example for Group III — *Drawings to company standards* which had been used in the manufacturer's normal plant activities.

d Group IV. Definition -- Data which is developed by the contractor as part of his normal operating procedures and his effort in supplying these data to the Government is minimal.

Estimated Price — Group IV items should normally be shown on the Form at no cost.

Example for Group IV — A brochure or short manual used in a company's normal commercial business, that is acquired by the Government in such small quantities that cost of determining a charge would not be practical.

Item 18 Estimated Total Price

a. For each item of data listed, the bidder or offeror shall enter an amount equal to that portion of the total price which is estimated to be attributable to the production or development for the Government of that item of data. These estimated data prices shall be developed only from those costs which will be incurred as a direct result of the requirement to supply the data, over and above those costs which would otherwise be incurred in performance of the contract if no data were required

b The estimated data prices shall not include any amount for rights in data. The Government's right to use the data shall be governed by the pertinent provisions of the contract.

[FR Doc. 80-40078 Filed 12-30-80; 8:45 am]
BILLING CODE 3110-01-C

Federal Register

Wednesday
December 31, 1980

Part XX

Environmental Protection Agency

Hazardous Waste Management System: Storage by Transporters; Shipments From Treatment, Storage, or Disposal Facilities; Transportation by Rail

ENVIRONMENTAL PROTECTION AGENCY

40 CFR Parts 122, 263, 264, and 265

[SW FRL 1715-5]

Hazardous Waste Management System: Storage Requirements Applicable to Transporters of Hazardous Waste, Standards for Owners and Operators of Hazardous Waste Treatment, Storage and Disposal Facilities, Interim Status Standards for Owners and Operators of Hazardous Waste Treatment, Storage, and Disposal Facilities and EPA Administered Permit Program: The Hazardous Waste Permit Program

AGENCY: Environmental Protection Agency.

ACTION: Interim final amendments and request for comments.

SUMMARY: In February and May of 1980, EPA promulgated final regulations applicable to transporters of hazardous waste and to owners and operators of hazardous waste storage facilities. 45 FR 12722 (February 26, 1980) and 45 FR 33066 (May 19, 1980). These amendments supplement those regulations by clarifying when a transporter handling shipments of hazardous waste is required to obtain a storage facility permit. Under these amendments a transporter may hold a manifested shipment of hazardous waste for up to ten days without a RCRA permit and without complying with the standards applicable to hazardous waste storage facilities. If the waste is held for more than ten days, an RCRA permit is required, and the transporter must comply with the applicable storage standards and permit requirements.

DATES: Effective date: December 31, 1980. Comment date: EPA will accept public comments on this interim final rule until March 2, 1981.

ADDRESS: Comments on the amendment should be sent to the Docket Clerk (Docket 3003—Transportation Storage), Office of Solid Waste (WH-563), U.S. Environmental Protection Agency, 401 M Street, SW., Washington, DC 20460.

FOR FURTHER INFORMATION CONTACT: For general information concerning these regulations, contact Rolf P. Hill, or Carolyn Barley, (202) 755-9150, Office of Solid Waste (WH-563), U.S. Environmental Protection Agency, Washington, DC 20460.

SUPPLEMENTARY INFORMATION:

I. Authority

This interim final regulation is issued under the authority of Sections 2002(a), 3002, 3003, 3004, and 3005, of Solid Waste Disposal Act, as amended by the Resource Conservation and Recovery Act of 1976, as amended, (RCRA), 42 U.S.C. 6912(a), 6923, 6924, 6925.

II. Background Information

A. Introduction

In regulations promulgated in February of 1980, EPA established standards applicable to generators and transporters of hazardous waste. 45 FR 12742 (February 26, 1980). These standards created, among other things, a manifest system which was designed to track hazardous wastes from their generation through their ultimate disposition. In addition, for the transportation of hazardous waste, EPA adopted many of the requirements of the Department of Transportation (DOT) under the Hazardous Materials Transportation Act designed to ensure the proper and safe transportation of hazardous materials. In May of 1980, DOT amended its regulations to include hazardous wastes in its regulatory program. 45 FR 34560 (May 22, 1980).

In May of 1980, EPA promulgated regulations that, among other things, set standards and permit requirements applicable to owners and operators of hazardous waste management facilities. 40 CFR Parts 264, 265 and 122. 45 FR 33220 (May 19, 1980). These regulations prescribe general operating practices for all hazardous waste management facilities as well as set specific requirements for the storage of hazardous waste. All hazardous waste management facilities must have an RCRA permit to operate or, prior to the issuance of a permit, be in "interim status".

Many transporters own or operate transfer facilities (sometimes called "break-bulk" facilities) as part of their transportation activities. At these facilities, for example, shipments may be consolidated into larger units or shipments may be transferred to different vehicles for redirecting or re-routing. Shipments generally are held at these facilities for short periods of time. The length of time may vary due to such factors as scheduling and weather, but because these facilities are intended to facilitate transportation activities, rather than storage, the time is typically as short as practicable.

In developing the hazardous waste regulations EPA recognized that in the normal course of transportation hazardous waste might be held for short periods of time in vehicles (e.g. in trucks parked at the transporter's terminal overnight or over a weekend) or at transfer facilities. The Agency did not, however, clearly state that the holding of hazardous waste by a transporter incidental to transportation would not require a RCRA storage permit and compliance with the standards applicable to storage of hazardous waste. A literal application of the regulations, however, might require all transporters who hold waste during transportation or who own or operate transfer facilities to obtain RCRA permits. The transportation industry has asked EPA whether the Agency intended to require transporters to file permit applications and comply with the substantive standards for storage.

B. Transfer Facility Requirements

For the reasons set forth below, EPA believes that transporters who hold hazardous wastes for a short period of time in the course of transportation should not be considered to be storing hazardous wastes and should not be required to obtain a RCRA permit or interim status and comply with the standards of Parts 264 or 265. For the amendments published today, EPA allows transporters to hold wastes in the course of transportation for up to 10 days if the waste is accompanied by a manifest and remains in containers which meet the Department of Transportation (DOT) packaging requirements. These amendments relieve transporters who own or operate a transfer facility of the necessity of obtaining a RCRA permit and of complying with the substantive requirements for storage for the holding of wastes which is incidental to normal transportation practices. The term transfer facility, as used in this amendment, refers to transportation terminals (including vehicle parking areas, loading docks and other similar areas) break-bulk facilities or any other facility commonly used by transporters to temporarily hold shipments of hazardous waste during transportation.

The transportation system established by EPA's regulations should achieve adequate protection of human health and the environment. Transporters have a natural incentive to move shipments quickly and efficiently; their business, in most cases, is the movement of hazardous wastes rather than the storage of such waste. In addition, the manifest system requires that the generator receive a copy of the manifest, signed and dated by the designated facility within 35 days. To avoid the necessity of locating shipments of hazardous waste and filing Exception Reports with EPA, generators will desire

prompt transportation and delivery of hazardous waste shipments. These factors, working together, should operate to ensure that wastes will not be held in storage for lengthy periods by transporters.

In addition, the amended regulations set a ten day period for in-transit holding of hazardous waste. This will of course provide a further incentive for transporters to quickly move shipments of hazardous waste. EPA chose a ten day period in order to allow short term holding of waste for transfer and to account for such things as scheduling problems, weather delays, temporary closing and other factors which might cause unforseen delays. The Agency also received information from the transportation industry indicating that shipments of hazardous waste normally take no longer than fifteen days (including both the actual transportation and the temporary holding of the shipment.) Therefore, providing ten days for in-transit storage of waste will cover almost all transportation related holding activities.

The amendments provide that the hazardous wastes being held at transfer facilities must be in containers (including tank cars and cargo tanks) which meet DOT specifications for packaging under 49 CFR 173, 178 and 179. This provision should ensure that the hazardous waste remains properly packaged during this phase of transportation. Although the Agency believes that this requirement should provide adequate protection of human health and the environment during the short period that hazardous wastes are held at a transfer facility, we solicit comments on whether additional requirements should be imposed, such as contingency plans, personnel training, and inspections. Comments are specifically requested on which, if any, of the Part 265 requirements should be placed on transporters who hold shipments of hazardous waste for ten days or less.

It is important to note that the provisions of Subpart C of Part 263, regarding transporter responsibilities in the event of a discharge, apply to transfer facilities. Specifically, a transporter is required to clean up any hazardous waste discharge and to report the discharge in accordance with the provisions of Department of Transportation's Regulations (49 CFR Part 171).

The Agency believes that adequate protection of human health and the environment can be achieved by limiting the length of in-transit holding of wastes and by requiring the use of DOT containers. These simple requirements do not have to be implemented through the issuance of RCRA permits and compliance with all the requirements for hazardous waste storage facilities. EPA further believes that the administrative burdens on both the regulated community and EPA are substantially reduced without detriment to the protection of human health and the environment.

In addition, by allowing limited in-transit storage without a RCRA permit or interim status, these amendments better serve the important purposes of the manifest system by enabling and requiring the generator to designate the ultimate treatment, storage or disposal facility, rather than a transporter transfer facility and by ensuring the prompt delivery of hazardous waste shipments to such facilities. If hazardous wastes had to be manifested to a permitted or interim status transfer facility where the wastes were held temporarily, then the generator would be unintentionally relieved of the important responsibility of designating and assuring delivery to the ultimate treatment, storage or disposal facility.

The ten day exemption only applies when a transporter is holding the manifested shipment of hazardous waste in containers which meet applicable Department of Transportation regulations for packaging. The Agency decided to exclude the holding of hazardous waste in stationary storage tanks from these amendments because the intent of this action is to accommodate those normal and routine transfer activities raised by the transportation industry. Specifically, the industry was concerned about RCRA's application to transport vehicles parked at transfer facilities and to containers which, in the course of being transferred from one vehicle to another, were held on a loading dock or other similar facility for a short period of time. The Agency specifically requests comments on whether the ten day exemption should be expanded to include temporary storage in tanks meeting the requirements of Subpart J of 40 CFR Part 265 (except § 265.193).

These amendments do not affect the manifest system established in the February and May regulations. The generator, each transporter and the designated facility are still required to sign the manifest. The Agency is, however, considering requiring additional entries on the manifest. Specifically, comments are requested on whether signatures and dates should appear on the manifest indicating when the shipment entered and left the transfer facility.

These amendments do not place any new requirements on transporters repackaging waste from one container to another (e.g., consolidation of wastes from smaller to larger containers) or on transporters who mix hazardous wastes at transfer facilities. The Agency solicits comments on whether regulatory controls over the consolidation of shipments and mixing of hazardous waste by transporters are warranted. Specifically, should controls similar to those in Part 265 regarding the mixing of incompatible waste be placed on transporters?

IV. Interim Final Regulations and Effective Date

A. Interim Final Regulations

EPA has determined under Section 553 of the Administrative Procedures Act, 5 U.S.C. 553, that there is good cause for promulgating these amendments without prior notice and comment. Without these amendments, transporters who own or operate transfer facilities, under a literal application of the regulations, could continue to operate such facilities on or after November 19, 1980 only if they had a permit or interim status and complied with the applicable requirements of Parts 264 or 265. We believe that it is essential to correct this and to clearly set forth the obligations of transporters.

B. Effective Date

Section 3010(b) of RCRA provides that EPA's hazardous waste regulations and revisions thereto take effect six months after promulgation. The purpose of this requirement is to allow persons handling hazardous waste sufficient lead time to prepare and to comply with major new regulatory requirements. For the amendments promulgated today, however, the Agency believes that an effective date six months after promulgation would cause substantial and unnecessary disruption in the implementation of the regulations and would not be in the public interest. Since the amendments reduce, rather than increase, the existing requirements for transporters, there is no basis for allowing a lengthy period of time for transporters to prepare for compliance. Therefore, the regulatory provisions that these amendments modify take effect immediately.

V. Environmental, Economic and Regulatory Impacts

These amendments reduce the economic, reporting and record-keeping impacts on transporters who own or operate transfer facilities by virtue of eliminating, in most cases, the

requirement for applying for an individual RCRA permit and complying with the substantive requirements of Parts 264 or 265. The proposed amendments will also reduce the resource demands on the Agency by reducing the number of individual RCRA permits that otherwise would have to be issued. The Agency believes that these savings can be achieved without significantly reducing the protection of human health and environment.

VI. Request for Comment

The Agency invites comments on all aspects of these amendments and on all of the issues discussed in this preamble. EPA recognizes that a wide variety of situations exist and is anxious to make its regulations as reasonable and workable as possible.

All comments should be addressed to the Docket Clerk (see address above) and should contain specific documentation which supports the comment.

Dated: December 22, 1980.

Douglas M. Costle,

Administrator.

Title 40 of the Code of Federal Regulations is amended as follows:

PART 260—HAZARDOUS WASTE MANAGEMENT SYSTEM: GENERAL

1. Add the following definition to § 260.10.

§ 260.10 [Amended]

* * * * *

"Transfer facility" means any transportation related facility including loading docks, parking areas, storage areas and other similar areas where shipments of hazardous waste are held during the normal course of transportation.

PART 263—STANDARDS APPLICABLE TO TRANSPORTERS OF HAZARDOUS WASTE

§ 263.10 [Amended]

2. Remove the note following § 263.10(c)(2).

3. Add the following section to Subpart A:

§ 263.12 Transfer facility requirements.

A transporter who stores manifested shipments of hazardous waste in containers meeting the requirements of § 262.30 at a transfer facility for a period of ten days or less is not subject to regulation under Parts 122, 264, and 265 of this chapter with respect to the storage of those wastes.

Part 264—STANDARDS FOR OWNERS AND OPERATORS OF HAZARDOUS WASTE TREATMENT, STORAGE, AND DISPOSAL FACILITIES

4. Add the following subparagraph to § 264.1(g)

§ 264.1 [Amended]

* * * * *

(g) * * *

(6) A transporter storing manifested shipments of hazardous waste in containers meeting the requirements of 40 CFR § 262.30 at a transfer facility for a period of ten days or less.

PART 265—INTERIM STATUS STANDARDS FOR OWNERS AND OPERATORS OF HAZARDOUS WASTE TREATMENT, STORAGE, AND DISPOSAL FACILITIES

5. Add the following subparagraph to § 265.1(c)

§ 265.1 [Amended]

* * * * *

(c) * * *

(10) A transporter storing manifested shipments of hazardous waste in containers meeting the requirements of 40 CFR § 262.30 at a transfer facility for a period of ten days or less.

PART 122—EPA ADMINISTERED PERMIT PROGRAMS: THE NATIONAL POLLUTANT DISCHARGE ELIMINATION SYSTEM; THE HAZARDOUS WASTE PERMIT PROGRAM; AND THE UNDERGROUND CONTROL PROGRAM

6. Add the following definition to § 122.3

§ 122.3 [Amended]

* * * * *

"Transfer facility" means any transportation related facility including loading docks, parking areas, storage areas and other similar areas where shipments of hazardous waste are held during the normal course of transportation.

7. Add the following subparagraph to § 122.21(d)(2)

§ 122.21 [Amended]

* * * * *

(d) * * *

(2) * * *

(vi) Transporters storing manifested shipments of hazardous waste in containers meeting the requirements of 40 CFR § 262.30 at a transfer facility for a period of ten days or less.

[FR Doc. 80-40647 Filed 12-30-80; 8:45 am]

BILLING CODE 6560-30-M

40 CFR Parts 262, 264 and 265

[SW FRL 1715-6]

Hazardous Waste Management System; Standards for Generators of Hazardous Waste, and Standards for Owners and Operators of Hazardous Waste Treatment, Storage, and Disposal Facilities and Interim Status Standards for Owners and Operators of Hazardous Waste Treatment, Storage, and Disposal Facilities

AGENCY: Environmental Protection Agency.

ACTION: Interim final rule and request for comments.

SUMMARY: This regulation amends §§ 262.10, 264.71 and 265.71 to provide that owners or operators of hazardous waste treatment, storage, and disposal facilities must comply with the requirements of Part 262 whenever a shipment of hazardous waste is initiated at their facilities. The effect of this provision is to require owners and operators to comply with the standards applicable to generators including the preparation of manifests, all pre-transport requirements and the recordkeeping and report provisions of Part 262.

DATES: Effective Date: December 31, 1980. Comment Date: The Agency will accept comments on this interim final rule until March 2, 1981.

ADDRESSES: Comments should be sent to Docket Clerk (Docket No. 3002-Shipments from Permitted Facilities), Office of Solid Waste (WH-563), U.S. Environmental Protection Agency, 401 M Street, S.W., Washington, D.C. 20460.

FOR FURTHER INFORMATION CONTACT: For information concerning these regulations, contact Rolf P. Hill, (202) 755-9150, Office of Solid Waste (WH-563), U.S. Environmental Protection Agency, Washington, D.C. 20460.

SUPPLEMENTARY INFORMATION:

I. Authority

This interim final rule is issued under the authority of sections 2002(a), 3002, 3003, and 3004 of the Solid Waste Disposal Act, as amended by the Resource Conservation and Recovery Act of 1976, as amended (RCRA), 42 USC 6912(a), 6923, 6924.

II. Background

Section 3004 of RCRA requires the Environmental Protection Agency (EPA) to promulgate standards for owners and operators of hazardous waste treatment, storage, and disposal facilities. EPA promulgated the initial set of these standards on May 19, 1980 45 FR 33220.

These regualtions, which are set forth in 40 CFR Parts 264 and 265, establish operating standards and practices for the management of hazardous wastes in treatment, storage and disposal facilities.

In addition, EPA has promulgated regulations establishing standards applicable to generators of hazardous waste. 40 CFR Part 262, 45 FR 12722 (February 26, 1980) and 45 FR 33140 (May 19, 1980). These regulations, require generators, among other things, to determine whether their waste is hazardous; initiate a manifest; properly label, package, mark and placard shipments of hazardous waste; and to comply with certain recordkeeping and reporting requirements.

Owners and operators of hazardous waste management facilities may generate hazardous waste (e.g., residues created by treatment processes). With respect to the hazardous waste that these persons generate, they, like other generators, must comply with the applicable provisions of Part 262. Accordingly, if owners and operators of these facilities transport hazardous waste off-site that they have generated, they must undertake certain activities, including initiating the manifest, and properly labeling and packaging the waste.

Owners and operators of hazardous waste management facilities may also ship off-site hazardous waste which they did not generate. The most obvious example is the removal of hazardous waste from a storage facility. The owner or operator of a storage facility does not "generate" a waste simply by removing it from storage. Removing hazardous waste from storage for shipment offsite, however, means that the waste will be transported and subsequently handled elsewhere.

Other examples are off-site transportation of (1) hazardous waste removed from a disposal facility, (2) wholly or partially treated hazardous waste which has not been "delisted" under § 261.3(d) and (3) solid waste generated from the treatment, storage or disposal of hazardous waste [see § 261.3(c)(2)] which has not been "delisted" under § 261.3(d). Although, in these situations, the owner or operator has not, in fact, "generated" the hazardous waste, EPA believes he should assume the responsibilities of a generator to assure that the off-site shipments of these wastes are properly managed.

Members of the regulated community have requested that EPA clarify what regulations apply when a facility initiates a shipment of hazardous waste which it did not generate. Some comments indicated that persons thought that such shipments would not require a manifest. However, in the preamble to the May 19 Part 261 regulations, under the heading "When does a hazardous waste cease to be a hazardous waste?", EPA stated, "as a practical matter, . . . facilities which store, dispose of, or treat hazardous waste must be considered hazardous waste management facilities for as long as they continue to contain hazardous waste, and . . . *any waste removed from such facilities, . . . must be managed as a hazardous waste.*" (emphasis added) 45 FR 33096 (May 19, 1980). Further, in comments included in the closure requirements of various sections of Part 265 (e.g. § 265.197), the Agency stated that shipments from facilities at closure as well as throughout the operating period must be managed in accordance with Parts 262 and 263. Thus it is evident that EPA intended owners and operators of these facilities to comply with the Part 262 standards when shipping hazardous wastes from their facilities. EPA failed, however, to specify that intent in the regulations.

III. Requirements on Shipments of Hazardous Waste From Facilities

This amendment requires owners and operators of hazardous waste management facilities to comply with the Part 262 generator standards when they initiate a shipment of hazardous waste which they have not "generated" from their facilities. (These owners and operators, like other generators of hazardous waste, must comply with all the Part 262 standards for hazardous wastes they in fact generate). The owner or operator is required to determine if the waste is hazardous (§ 262.11). If the owner or operator is removing from storage hazardous waste which was originally manifested by the generator, he may rely on the information on the manifest to make the determination pursuant to § 262.11(c)(2). He is required to prepare a manifest to accompany the shipment, pursuant to Subpart B of Part 262. He must package, label, mark, and placard the waste in accordance with the applicable EPA and Department of Transportation regulations, as provided in Subpart C of Part 262. He must also comply with the Subpart D recordkeeping and reporting requirements and the special conditions applicable to international shipments (§ 262.50).

The owner or operator is not required to obtain a new EPA identification number when manifesting shipments of hazardous waste. The number already assigned to the owner or operator of the facility should be used.

The provisions of § 262.34 do not apply, however, to hazardous wastes which the owner or operator did not generate, that is, hazardous wastes which he received are not eligible for the accumulation time provisions. Those provisions relate to accumulation of waste immediately after it has been generated at the site of generation in order to allow the generator an opportunity to accumulate sufficient quantities of waste prior to treatment, storage or disposal and to make the necessary arrangements for the waste's disposition.

Today's amendment applies when the owner or operator initiates a shipment of hazardous waste. Some facilities which have storage permits may handle, in the course of transportation, hazardous waste shipments which are accompanied by a manifest designating another facility for treatment, storage or disposal of the waste. For example, a transfer facility operated by a transporter may engage in longterm storage of hazardous waste and may also hold manifested waste for short periods related to the transportation of that waste. Another amendment to the hazardous waste regulations states that the holding of manifested wastes for short periods in the course of transportation does not constitute storage requiring a RCRA permit or interim status or compliance with the 264/265 standards. The amendment discussed in this preamble applies to the removal of hazardous waste from long-term storage; the waste held for short periods (ten days or less) as part of the routine transportation of that waste would be subject to the original manifest.

These amendments do not apply to inactive facilities or to the inactive portions of treatment, storage and disposal facilities. The applicability of the RCRA hazardous waste regulations to those facilities is the subject of another amendment which is currently being developed by the Agency. In the interim, persons shipping hazardous waste from inactive facilities or inactive portions of facilities are advised to manifest each shipment and comply with the other requirements of Part 262.

The rationale for applying these requirements to owners and operators of hazardous waste management facilities parallels that underlying the entire Subtitle C system. Congress established the system to protect public health and the environment during management of hazardous waste from the time of generation through ultimate disposition. The key to the system is the manifest, which enables EPA (or the states, when

their programs are approved) to track individual shipments of hazardous waste. RCRA places the initial burden of preparing the manifest, recordkeeping, and reporting on the generator. Other requirements placed upon the generator—proper packaging, labeling, placarding and marking—are essential in ensuring transportation of hazardous wastes in a manner which protects human health and the environment. Further, section 3004(2) requires facilities to comply with the manifest system established under section 3002 which assures that hazardous wastes are sent to permitted facilities. Therefore, the owner or operator of a facility who ships hazardous waste elsewhere is in a position analogous to the generator. It is his act which ought to trigger the application or regulatory controls designed to ensure the safe transportation of hazardous wastes. For this reason, EPA believes that it is entirely appropriate for the owner or operator to comply with the Part 262 requirements.

IV. A. Interim Final Regulations

EPA has determined that good cause exists to promulgate these amendments without prior notice and comment. They conform the regulations to their original intent, and ensure "cradle-to-grave" control over hazardous waste. The failure to explicitly include these requirements has caused substantial uncertainty and confusion in the regulated community. To prolong this confusion during the completion of formal rulemaking could result in substantial hardship on the regulated community.

In addition, there are compelling environmental reasons for EPA to undertake this procedural course. There are no explicit requirements without these amendments for persons who remove hazardous waste from storage facilities. This means that a substantial volume of hazardous waste which is otherwise subject to regulation may be shipped and handled without any regulatory controls. Based on the literal language of the regulations, as presently drafted, these wastes need not be manifested, nor properly labeled or packaged, nor sent to a proper treatment, storage or disposal facility. EPA has determined, however, that these requirements are necessary to protect human health and the environment. These requirements are equally necessary whether a generator initiates a shipment of hazardous waste or whether an owner or operator of a storage facility does so.

V. Effective Date

Section 3010(b) of RCRA provides that EPA's hazardous waste regulations and revisions take effect six months after promulgation. The purpose of this requirement is to allow persons handling hazardous waste sufficient time to comply with major new regulatory requirements. For most facilities, EPA believes that these amendments conform the regulations to normal operating practices and therefore the amendments do not impose new obligations on these persons. The Agency does, however, recognize that certain facilities may have to take some time to bring their practice up to the new requirements. Because of the urgency of these amendments, however, EPA has decided to make these amendments effective immediately. Without such effect, as discussed in the preceding section, serious threat to human health and the environment exists.

VI. Environmental, Economic and Regulatory Impacts

For the most part, the economic, reporting and recordkeeping impacts of these amendments are minimal. The estimated impacts developed for the May 19 regulations included the majority of those impacts related to shipments of hazardous waste from treatment at the generator's facility were included in the calculations. The Agency is unable to estimate the cost and impact increase from these amendments but believes, for the reasons stated above, that the additional environmental benefits greatly outweigh the minimal burden placed on the regulated community.

Dated: December 22, 1980.

Douglas M. Costle,

Administrator.

Title 40 of the Code of Federal Regulations is amended as follows:

PART 262—STANDARDS APPLICABLE TO GENERATORS OF HAZARDOUS WASTE

1. Add the following paragraph to § 262.10:

§ 262.10 Purpose, scope and applicability.

* * * * *

(f) An owner or operator who initiates a shipment of hazardous waste from a treatment, storage, or disposal facility must comply with the generator standards established in this Part. [Note: The provisions of § 262.34 are applicable to the on-site accumulation of hazardous waste by generators. Therefore, the provisions of § 262.34 only apply to owners or operators who are shipping hazardous waste which they generated at that facility.]

PART 264—STANDARDS FOR OWNERS AND OPERATORS OF HAZARDOUS WASTE TREATMENT, STORAGE AND DISPOSAL FACILITIES

2. Add the following paragraph to § 264.71:

§ 264.71 Use of the manifest system.

* * * * *

(c) Whenever a shipment of hazardous waste is initiated from a facility, the owner or operator of that facility must comply with the requirements of Part 262 of this chapter. [Comment: The provisions of § 262.34 are applicable to the on-site accumulation of hazardous wastes by generators. Therefore, the provisions of § 262.34 only apply to owners or operators who are shipping hazardous waste which they generated at that facility.]

PART 265—INTERIM STATUS STANDARDS FOR OWNERS AND OPERATORS OF HAZARDOUS WASTE TREATMENT, STORAGE AND DISPOSAL FACILITIES

3. Add the following paragraph to § 265.71:

§ 265.71 Use of the manifest system.

* * * * *

(c) Whenever a shipment of hazardous waste is initiated from a facility, the owner or operator of that facility must comply with the requirements of Part 262 of this chapter. [Comment: The provisions of § 262.34 are applicable to the on-site accumulation of hazardous wastes by generators. Therefore, the provisions of § 262.34 only apply to owners or operators who are shipping hazardous waste which they generated at that facility.]

[FR Doc. 80-40650 Filed 12-30-80; 8:45 am]
BILLING CODE 6560-30-M

---

40 CFR Parts 262, 263, 264, and 265

[SWH-FRL 1715-7]

Transportation of Hazardous Waste by Rail

AGENCY: Environmental Protection Agency.

ACTION: Interim final amendment and request for comments.

SUMMARY: Regulations promulgated in May 1980, established requirements for the transportation of hazardous waste by rail 45 FR 33150 (May 19, 1980). The

amendments published today change the regulations to allow in certain instances shipments of hazardous waste to be transported by rail transporters without a manifest, provided the shipment is accompanied by certain information on the manifest; to require under certain circumstances initial rail transporters to forward copies of the manifest to the next non-rail transporter or the designated facility; to clarify signature requirements of the manifest and rail shipping paper; and to eliminate recordkeeping requirements for intermediate rail transporters.

DATES: Effective date: December 31, 1980. Comment date: This amendment is promulgated as an interim final rule. The Agency will accept comments on it until March 2, 1981.

ADDRESSES: Comments on the amendment should be sent to Docket Clerk [Docket No. 3003–Railroads], Office of Solid Waste (WH–563), U.S. Environmental Protection Agency, 401 M Street, SW, Washington, D.C. 20460.

FOR FURTHER INFORMATION CONTACT: For general information contact Rolf P. Hill or Carolyn Barley (202) 755–9150, Office of Solid Waste, U.S. Environmental Protection Agency, 401 M. Street, SW, Washington, DC 20460. for information on implementation, contact:

Region I, Dennis Huebner, Chief, Radiation, Waste Management Branch, John F. Kennedy Building, Boston, Massachusetts 02203, (617) 223–5777

Region II, Dr. Ernest Regna, Chief, Solid Waste Branch, 26 Federal Plaza, New York, New York 10007, (212) 264–0504/5

Region III, Robert L. Allen, Chief, Hazardous Materials Branch, 6th and Walnut Streets, Philadelphia, Pennsylvania 19106, (215) 597–0980

Region IV, James Scarbrough, Chief, Residuals Management Branch, 345 Courtland Street, N.E., Atlanta, Georgia 30365, (404) 881–3016

Region V, Karl J. Klepitsch, Jr., Chief, Waste Management Branch, 230 South Dearborn Street, Chicago, Illinois 60604, (312) 886–6148

Region VI, R. Stan Jorgensen, Acting Chief, Solid Waste Branch, 1201 Elm Street, First International Building, Dallas, Texas 75270, (214) 787–2645

Region VII, Robert L. Morby, Chief, Hazardous Materials Branch, 324 E. 11th Street, Kansas City, Missouri 64106, (816) 374–3307

Region VIII, Lawrence P. Gazda, Chief, Waste Management Branch, 1860 Lincoln Street, Denver, Colorado 80203, (303) 837–2221

Region IX, Arnold R. Den, Chief, Hazardous Materials Branch, 215 Fremont Street, San Francisco, California 94105, (415) 556–4606

Region X, Kenneth D. Feigner, Chief, Waste Management Branch, 1200 Sixth Avenue, Seattle, Washington 98101, (206) 442–1260

I. Authority

These amendments are issued under the authority of Sections 2002(a), 3002, 3003, 3004, 3005 and 3006 of the Solid Waste Disposal Act, as amended by the Resource Conservation and Recovery Act of 1976 as amended (RCRA), 42, U.S.C. 6912(a), 6921, 6922, 6923, 6924, 6925 and 6926.

II. Background

On February 26, 1980 and May 19, 1980, EPA promulgated regulations establishing a federal hazardous waste management system. 45 FR 12722 (February 26, 1980) 45 FR 33066 (May 19, 1980). A central feature of this program is a manifest system which is designed to track shipments of hazardous waste from the point of generation through ultimate disposition. Parts 262, 263, 264 and 265 contain requirements for the transportation of hazardous waste and the use of an accompanying manifest.

The regulations set special requirements when hazardous waste is delivered to a hazardous waste management facility by rail. Recognizing that railroads had sophisticated computerized tracking and information systems, the regulations allow railroads to use a shipping paper rather than a manifest and waive signature requirements between intermediate rail carriers.

Since the promulgation of the regulations, representatives of the rail industry have contended that EPA did not go far enough and that special requirements were also necessary for intermodal shipments of hazardous waste (i.e. those which involve both railroads and other types of transportation). It was the position of the rail industry that the manifest system, if applied without adjustment to intermodal shipments, would so disrupt the normal operating practices of railroads as to effectively prevent the use of this method of transportation. Several railroads have indicated that they would refuse all shipments of hazardous waste.

EPA had no intention of discouraging rail transportation of hazardous wastes. The original regulations limited rail transportation requirements to shipments delivered to facilities by rail because the Agency believed that it was essential that non-rail transporters comply with all the requirements of the manifest system. Unlike railroads, these transporters may not have established tracking and information systems. In discussions with the rail industry EPA was able to devise a workable system which would facilitate intermodal rail transportation without undermining the operation of the manifest system or jeopardize protection to human health or the environment.

The amendments promulgated today establish a system which allows intermodal transportation involving railroads without the need for a manifest accompanying the waste during the rail portion of the shipment; ensures that non-rail transporters carry a manifest; and imposes no increased burden upon any person involved in the transportation of hazardous waste. EPA believes that these minor changes in the regulations achieve a practical solution to this problem without any sacrifice to the objectives underlying the manifest system.

EPA has not extended today's amendments to include transportation of bulk shipments by water, which in the original regulations were treated in a manner similar to the railroads. EPA has not received information indicating that that the manifest requirements are not working in these situations. Therefore, with the exception of the change regarding international shipment, the changes made today concern only the manifest requirements for railroads.

III. Interim Final Amendments

A. Shipments Delivered to Facilities by Rail

One substantive change and several minor wording changes have been made in the manifest requirements when the shipment is delivered to the designated facility by rail. If a railroad picks up the hazardous waste at the generator's site, or if a non-rail transporter delivers the shipment to a rail transporter, the railroad must sign the manifest, return a copy to the generator or non-rail transporter, and ensure that a shipping paper containing the essential manifest information accompanies the waste. Signatures between intermediate rail transporters are not required. The generator must send copies of the manifest to the designated facility if the railroad picks up the shipment at the generator's facility. When a rail transporter receives a shipment from a non-rail transporter this amendment requires the intitial rail carrier (rather than the non-rail transporter as required in the May 19, regulations) to forward the manifest to the designated facility or next non-rail transporter. In this situation it appears that the rail transporter is better situated to take the

steps necessary to forward the manifest. The transfer of the waste occurs typically at a rail yard or terminal where the rail transporter has the personnel and facilities to ensure transmittal of the manifest.

Upon delivery of the waste to the facility, the manifest or shipping paper (if the manifest has not arrived) must be signed. The owner or operator of the hazardous waste management facility must return the manifest or signed shipping paper to the generator and also retain copies of the manifest and the shipping paper (if it has been signed in lieu of the manifest at the time of delivery).

A change in the recordkeeping requirements has been made. Intermediate rail transporters are not required to retain a copy of the manifest or shipping paper; the recordkeeping requirements are keyed to the initial and final rail transporter. The existing recordkeeping practices of the rail industry include detailed interchange information which track the movement of individual railcars. This information will enable EPA, if necessary, to determine where and when transfers between rail transporters occurred. Because of the adequacy of exisiting practices in the industry, EPA has determined that intermediate rail transporters do not need to physically retain a copy of the shipping paper. The initial and final rail transporters, however, play more important roles in the transportation of these shipments, including signing and dating the manifest, and the regulations maintain responsibilities on them. It appears appropriate, therefore, for the recordkeeping requirements of the original regulations to remain applicable to them.

B. Intermodal Transportation of Hazardous Waste

The regulations, as amended today, recognize that shipments of wastes may involve different types of transportation and that the special requirements for rail transportation should apply in these situations. The regulations have been accordingly adjusted to take into account situations in which the final transportation is not by railroad.

The only difference in this case is that the amendments require the manifest to be forwarded to the next non-rail transporter designated on the manifest. The amended regulations allow the rail transporter to transfer the waste shipment to non-rail transporters without having carried the manifest with the waste shipment. At this time, however, the manifest must be signed and dated by both transporters. This means, of course, that the non-rail transporter must have received the manifest from either the generator or the initial rail transporter before accepting the waste. The Agency remains convinced that the manifest, rather than the shipping paper, is essential for the transportation of hazardous waste by means other than rail. The manifest, signed by all appropriate parties, must accompany all non-rail transportation of hazardous waste.

Once a non-rail transporter accepts the waste shipment with the manifest, the general manifest requirements of Part 262 apply and the manifest becomes the operative document. The non-rail transporter must deliver the shipment to the next designated person, obtain the signature and date of that person and retain a copy of the manifest.

C. Signature Requirements for Owners and Operators of Hazardous Waste Management Facilities

One minor change has been made in the Part 264 and 265 regulations applicable to owners and operators of hazardous waste management facilities. Sections 264.71(b) and 265.71(b) of the May 19, 1980, regulations required the owner or operator of the facility to sign and date the shipping paper, note discrepancies on this document, and return a copy of the shipping paper to the transporter. These regulations were keyed to the situation in which the facility had not received the manifest from the generator. EPA intended, however, that if the manifest has been received, it would be used. The regulations have been amended to clarify this.

D. International Shipments

The May 19, 1980 regulations required that transporters who ship hazardous waste out of the United States to sign and date the manifest, return a copy to the generator, and retain a copy of the manifest. For rail and water (bulk) shipment, however, the regulations established no mechanism to ensure that the rail or water bulk transporter had a copy of the manifest. These transporters, if not the initial transporter, are required to have a shipping paper but the manifest does not have to accompany the shipment. The regulations have been amended to require the generator (or the initial rail transporter if the waste is delivered to the railroad) to forward copies of the manifest to the last rail or water bulk transporter to handle the waste shipment in the United States.

E. State Program Requirements

Part 123 of the May regulations specifies certain requirements that a State program must meet in order to obtain interim authorization and final authorization under section 3006 of RCRA. Specific sections of Parts 262 and 263 related to rail transportation were cited. These amendments to Part 262 and 263 added new provisions. Part 123 has therefore been amended to correctly cite these new provisions. This action, which is simply a change in the sections cited, does not place any additional burden on States seeking interim or final authorization.

F. Department of Transportation Amendments

The May regulations concerning the transportation of hazardous waste resulted from a joint rulemaking effort with the Department of Transportation (DOT). EPA adopted certain DOT regulations and DOT revised its hazardous materials transportation regulations to encompass the transportation of hazardous waste.

These amendments to the May regulations, in order to be fully implemented, require DOT to amend its regulations. DOT has indicated that it plans to publish corresponding amendments to its regulations in the near future.

IV. Effective Date

Section 3010(b) of RCRA provides that EPA's hazardous waste regulations and revisions thereto take effect six months after promulgation. The purpose of this requirement is to allow persons handling hazardous waste sufficient lead time to prepare to comply with major new regulatory requirements. The amendment promulgated today, however, reduces and simplifies the existing requirements applicable to rail transporters. In addition the Agency believes that an effective date six months after promulgation would cause substantial and unnecessary disruption in the implementation of the regulations and would not be in the public interest. The regulatory provisions that these amendments modify took effect on November 19, 1980. In the absence of the effectuation of these amendments, rail transportation of hazardous wastes would be severely disrupted. The Agency has decided, that without these changes, the rail industry would be unduly burdened with no additional protection afforded to human health or the environment. Therefore, this amendment is effective immediately.

V. Promulgation in Interim Final Form

These amendments make the practical operation of the manifest system possible in situations involving rail and non-rail transportation of hazardous waste. They will prevent the disruption of rail transportation by relieving the rail industry from complying with impractical requirements. They do not, in any appreciable manner, reduce the protection of human health and the environment, nor do they change the essential features of the manifest system.

Although the Agency would prefer to engage in formal rulemaking prior to the promulgation of these amendments, it believes that good cause exists to waive these procedures. (See 5 U.S.C. 553(b)(B)). Without immediate promulgation, substantive hardship would be imposed on all sectors of the regulated community, particularily upon generators dependent on railroads to transport their hazardous waste to proper hazardous waste management facilities. The changes are, furthermore, the outgrowth of extensive, and ongoing, discussions with the rail industry. The amendments, although promulgated without formal prior opportunity to comment, do reflect substantial consideration of the position of one central portion of the regulated community.

VI. Regulatory Impacts

The effect of these amendments is to reduce the overall costs, economic impacts, and recordkeeping requirements of EPA's hazardous waste management regulations. This is principally achieved by removing the recordkeeping requirements for intermediate rail transporters. The Agency is unable to estimate these cost and impact reductions. The Agency believes, however, that the protection of human health and the environment of these regulations is not reduced by these amendments.

Dated: December 22, 1980.

Douglas M. Costle,

Administrator.

Title 40 CFR is amended as follows:

PART 262—STANDARDS APPLICABLE TO GENERATORS OF HAZARDOUS WASTE

1. Paragraph (c) of § 262.23(c) is revised to read as follows:

§ 262.23 [Amended]

* * * * *

(c) For shipments of hazardous waste within the United States solely by water (bulk shipments only), the generator must send three copies of the manifest dated and signed in accordance with this section to the owner or operator of the designated facility or the last water (bulk shipment) transporter to handle the waste in the United States if exported by water. Copies of the manifest are not required for each transporter.

2. A new § 262.23(d), is added to read as follows:

* * * * *

(d) For rail shipments of hazardous waste within the United States which originate at the site of generation, the generator must send at least three copies of the manifest dated and signed in accordance with this section to:

(i) The next non-rail transporter, if any; or

(ii) The designated facility if transported solely by rail; or

(iii) The last rail transporter to handle the waste in the United States if exported by rail.

3. The note following § 262.23, is changed to read as follows:

Note.—See § 263.20(e) and (f) for special provisions for rail or water (bulk shipment) transporters.

PART 263—STANDARDS APPLICABLE TO TRANSPORTERS OF HAZARDOUS WASTE

4. Section 263.20(e) introductory text, (1), (4) and (5), is revised to read as follows:

§ 263.20 [Amended]

* * * * *

(e) The requirements of paragraph (c), (d) and (f) of this section do not apply to water (bulk shipment) transporters if:

(1) The hazardous waste is delivered by water (bulk shipment) to the designated facility; and

* * * * *

(4) The person delivering the hazardous waste to the initial water (bulk shipment) transporter obtains the date of delivery and signature of the water (bulk shipment) transporter on the manifest and forwards it to the designated facility; and

(5) A copy of the shipping paper or manifest is retained by each water (bulk shipment) transporter in accordance with § 263.22.

* * * * *

5. A new § 263.20(f) is added to read as follows and remaining paragraph (f) of § 263.20 is renumbered as paragraph (g):

(f) For shipments involving rail transportation, the requirements of paragraphs (c), (d) and (e) do not apply and the following requirements do apply:

(1) When accepting hazardous waste from a non-rail transporter, the initial rail transporter must:

(i) Sign and date the manifest acknowledging acceptance of the hazardous waste;

(ii) Return a signed copy of the manifest to the non-rail transporter;

(iii) Forward at least three copies of the manifest to:

(A) The next non-rail transporter, if any; or,

(B) The designated facility, if the shipment is delivered to that facility by rail; or

(C) The last rail transporter designated to handle the waste in the United States;

(iv) Retain one copy of the manifest and rail shipping paper in accordance with § 263.22.

(2) Rail transporters must ensure that a shipping paper containing all the information required on the manifest (excluding the EPA identification numbers, generator certification, and signatures) accompanies the hazardous waste at all times.

Note.—Intermediate rail transporters are not required to sign either the manifest or shipping paper.

(3) When delivering hazardous waste to the designated facility, a rail transporter must:

(i) Obtain the date of delivery and handwritten signature of the owner or operator of the designated facility on the manifest or the shipping paper (if the manifest has not been received by the facility); and

(ii) Retain a copy of the manifest or signed shipping paper in accordance with § 263.22.

(4) When delivering hazardous waste to a non-rail transporter a rail transporter must:

(i) Obtain the date of delivery and the handwritten signature of the next non-rail transporter on the manifest; and

(ii) Retain a copy of the manifest in accordance with § 263.22.

(5) Before accepting hazardous waste from a rail transporter, a non-rail transporter must sign and date the manifest and provide a copy to the rail transporter.

6. § 263.22(b) introducing text is amended to read as follows:

§ 263.22 [Amended]

* * * * *

(b) For shipments delivered to the designated facility by water (bulk shipment), each water (bulk shipment) transporter must retain a copy of the shipping paper containing all the information * * *.

7. A new § 263.22(c) is added to read as follows and paragraph (c) and (d) of

§ 263.22 are re-numbered as paragraphs (d) and (e), respectively.

* * * * *

(c) For shipments of hazardous waste by rail within the United States:

(i) The initial rail transporter must keep a copy of the manifest and shipping paper with all the information required in § 263.20(f)(2) for a period of three years from the date the hazardous waste was accepted by the initial transporter; and

(ii) The final rail transporter must keep a copy of the signed manifest (or the shipping paper if signed by the designated facility in lieu of the manifest) for a period of three years from the date the hazardous waste was accepted by the initial transporter.

Note.—Intermediate rail transporters are not required to keep records pursuant to these regulations.

PART 264—STANDARDS FOR OWNERS AND OPERATORS OF HAZARDOUS WASTE TREATMENT, STORAGE, AND DISPOSAL FACILITIES

8. Section 264.71(b) introductory text, (2) and (4) are amended and (1), (3), and (5) are revised as follows:

§ 264.71 [Amended]

* * * * *

(b) If a facility receives, from a rail or water (bulk shipment) transporter, hazardous waste which is accompanied by a shipping paper containing all the information required on the manifest * * *

(1) Sign and date each copy of the manifest or shipping paper (if the manifest has not been received) to certify that the hazardous waste covered by the manifest or shipping paper was received;

(2) Note any significant discrepancies (as defined in § 264.72(a)) in the manifest or shipping paper (if the manifest has not been received) on each copy of the manifest or shipping paper. * * *

(3) Immediately give the rail or water (bulk shipment) transporter at least one copy of the manifest or shipping paper (if the manifest has not been received);

(4) Within 30 days after the delivery, send a copy of the signed and dated manifest to the generator; however, if the manifest has not been received within 30 days after delivery, the owner or operator, or his agent, must send a copy of the shipping paper signed and dated to the generator; and * * *

(5) Retain at the facility a copy of the manifest and shipping paper (if signed in lieu of the manifest at the time of delivery) for at least three years from the date of delivery.

PART 265—INTERIM STATUS STANDARDS FOR OWNERS AND OPERATORS OF HAZARDOUS WASTE TREATMENT, STORAGE, AND DISPOSAL FACILITIES

9. Section 265.71(b) introductory text, (2) and (4) are amended and (1), (3), and (5) are revised as follows:

§ 265.71 [Amended]

* * * * *

(b) If a facility receives, from a rail or water (bulk shipment) transporter, hazardous waste which is accompanied by a shipping paper containing all the information required on the manifest * * *

(1) Sign and date each copy of the manifest or shipping paper (if the manifest has not been received) to certify that the hazardous waste covered by the manifest or shipping paper was received;

(2) Note any significant discrepancies (as defined in § 265.72(a)) in the manifest or shipping paper (if the manifest has not been received) on each copy of the manifest or shipping paper * * *

(3) Immediately give the rail or water (bulk shipment) transporter at least one copy of the manifest or shipping paper (if the manifest has not been received);

(4) Within 30 days after the delivery, send a copy of the signed and dated manifest to the generator; however, if the manifest has not been received within 30 days after delivery, the owner or operator, or his agent, must send a copy of the shipping paper signed and dated to the generator; and * * *

(5) Retain at the facility a copy of the manifest and shipping paper (if signed in lieu of the manifest at the time of delivery) for at least three years from the date of delivery.

PART 123—STATE PROGRAM REQUIREMENTS

10. Revise § 123.34(f)(3) to read as follows:

123.34 [Amended]

(f) * * *

(3) Ensure that all wastes offered for transportation are accompanied by the manifest, except in the case of shipments by rail or water specified in 40 CFR §§ 262.23 (c) and (d) and §§ 262.20 (e) and (f). The State program shall provide requirements for shipments by rail or water equivalent to those under 40 CFR §§ 262.23 (c) and (d) and §§ 263.20 (e) and (f).

11. Revise § 123.35(c) to read as follows:

§ 123.35 [Amended]

* * * * *

(c) The State must require the transporter to carry the manifest during transport, except in the case of shipments by rail or water specified in 40 CFR 263.20 (e) and (f) and to deliver waste only to the facility designated on the manifest. The State program shall provide requirements for shipments by rail or water equivalent to those under 40 CFR §§ 263.20 (e) and (f).

12. Revise § 123.128(b)(7)(ii) to read as follows:

§ 123.128 [Amended]

* * * * *

(b) * * *

(7) * * *

(ii) The manifest accompany all wastes offered for transport, except in the case of shipments by rail or water specified in § 262.23 (c) and (d) and § 263.20 (e) and (f); and

13. Revise § 123.128(c)(5) to read as follows:

§ 123.128 [Amended]

* * * * *

(c) * * *

(5) The State program must require that transporters carry the manifest with all shipments, except in the case of shipments by rail or water specified in 40 CFR 263.20 (e) and (f).

[FR Doc. 80-40651 Filed 12-30-80; 8:45 am]

BILLING CODE 6560-30-M

Federal Register

Wednesday
December 31, 1980

Part XXI

Department of Energy

Procedures for Public Participation in Power and Transmission Rate Adjustments and Extensions

DEPARTMENT OF ENERGY

10 CFR Part 903

Procedures for Public Participation in Power and Transmission Rate Adjustments and Extensions

AGENCY: Department of Energy, Resource Applications.

ACTION: Final regulations.

SUMMARY: Notice is given that the Assistant Secretary, Resource Applications has adopted regulations establishing common public participation procedures for power and transmission rate adjustments and extensions for four Power Marketing Administrations (PMAs) of the Department of Energy: Alaska Power Administration, Southeastern Power Administration, Southwestern Power Administration, and Western Area Power Administration. The Bonneville Power Administration is not included because the newly enacted Pacific Northwest Electric Power Planning and Conservation Act, Pub. L. 96-501 (December 5, 1980), establishes unique procedural requirements for Bonneville rate adjustments. The regulations govern the development of rate proposals by the administrators of the four PMAs and the confirmation and approval of rates on an interim basis, subject to refund, by the Assistant Secretary for Resource Applications pursuant to the authority delegated by the Secretary of Energy in Delegation Order No. 0204-33, 43 FR 60636 (December 28, 1978).

Proposed procedures were published in the Federal Register July 5, 1979, 44 FR 39184. Opportunities for oral presentation of views were provided in Washington, D.C., on July 27 and August 17, 1979, and written and oral comments were received from more than 40 individuals and entities.

DATE: The regulations are effective December 31, 1980.

FOR FURTHER INFORMATION CONTACT:
James A. Braxdale, Office of Power Marketing Coordination, Department of Energy, Room 3349, 12th and Pennsylvania Avenue, NW., Washington, D.C. 20461 (202) 633-8338
Richard K. Pelz, Office of General Counsel, Department of Energy, 1000 Independence Avenue, SW., Washington, D.C. 20585 (202) 252-2918

SUPPLEMENTARY INFORMATION:

I. Introduction

The Assistant Secretary for Resource Applications by Delegation Order No. 0204-33, 43 FR 60636 (December 28, 1978) has been delegated, effective January 1, 1979, the authority to develop, acting by and through the Administrators, power and transmission rates for the Alaska, Bonneville, Southeastern, Southwestern, and Western Area Power Administrations (PMAs). The Assistant Secretary, by the same delegation order, was given the authority to confirm, approve, and place such rates in effect on an interim basis subject to refund. The order also delegated to the Federal Energy Regulatory Commission (FERC) the authority to confirm and approve such rates on a final basis.

The regulations adopted herewith are designed to establish common procedures for public participation in the devlopment of new, revised, or extended power and transmission rates for four of the five PMAs, for confirming, approving, and placing such rates in effect on an interim basis, and for submittal of the rates and supporting documents to the FERC for confirmation and approval on a final basis. The procedures apply only to the activities of the four PMAs and the Assistant Secretary. The FERC is responsible for the formal or informal procedures it will follow in exercising its authority under the delegation order.

The first formal procedures for public participation by any of the five PMAs were published in the Federal Register on August 15, 1975, 40 FR 34431, for the Bureau of Reclamation after review of the public comments on the proposed rules, 40 FR 22156 (May 21, 1975). The other PMAs have followed similar procedures. The Alaska and Southwestern Power Administrations follow an informal practice on a case-by-case basis. The Bonneville Power Administration follows the "Procedures for Public Participation in Marketing Policy Formulation," 42 FR 62950 (December 14, 1977), amended by 45 FR 73531 (November 5, 1980); the Southeastern Power Administration has available the "Procedure for Public Participation in the Formulation of Marketing Policy," 43 FR 29186 (July 6, 1978); and the Western Area Power Administration follows the procedures previously used by the Bureau of Reclamation with amendments to adapt them to the establishment of the Western Area Power Administration in the Department of Energy, 43 FR 12076 (March 23, 1978), amended by 44 FR 7796 (February 7, 1979).

The regulations adoped herewith are in large part based on the experience that has been gained by the PMAs since 1975 in the conduct of 20 or so rate adjustment proceedings. The procedures used in the previous proceedings have received substantial acceptance by the customers. Basically, they have consisted of the preparation of power repayment studies, showing the need for a rate adjustment and the revenue level necessary to meet the repayment requirements; and a rate design study which explains how the unit charges were derived. A consultation and comment period of at least 90 days has been allowed to answer questions concerning the proposed rate and to receive written and oral comments. During this time interested customers and others were supplied with copies of the repayment and rate design studies, a public information forum was typically held at which questions concerning the rate proposal were answered, and a public comment forum was held to afford interested members of the public the opportunity to submit comments to the Department.

A draft of the proposed regulations was published in the Federal Register of July 5, 1979, 44 FR 39184. Hearings were held in Washington, D.C., on July 27 and August 17, to receive oral comments, and written comments were invited to be submitted by September 4, 1979. In response to these opportunities, written and oral comments were received from more than 40 individuals or groups, a list of which is included in the notice. Also, written comments were submitted by the PMAs and by staff of the Assistant Secretary for Policy and Evaluation. Subsequent comments were received from staffs of the FERC and the Economic Regulatory Administration (ERA). In addition to reviewing and considering all of the comments, we also have had the benefit of the experience gained in the issuance of several additional rate orders after the proposed regulations were published for comment. Of these, the rate adjustment involving the largest amount of money was Rate Order BPA-2, 44 FR 70517 (December 7, 1979). This also was the most complex rate proceeding.

During this period, the Department converted the Department of the Interior's guidelines for Financial Reporting, which appeared as Chapter 4 of Part 730 for the Departmental Manual (DM), into an order of the Department of Energy, designated RA 6120.2, "Power Marketing Administration Financial Reporting." The provisions of 730 DM 3 relating to the repayment interest rates also have been incorporated into RA 6120.2 as paragraph 11. This conversion was technical only, and no substantive changes were made. RA 6120.2 supplements the regulations adopted today.

Because of the existence of RA 6120.2, it has been decided to eliminate the

sections of the proposed regulations which essentially duplicate it; that is, § 903.4 (Cost recovery), § 903.10 (Corrective action), and the definition of and other references to power repayment studies.

Public commenters indicated strong opposition to portions of the proposed § 903.5 on rate design; namely subsection (b) on cost analysis, subsection (d) on conservation, and subsection (e) on the PURPA standards. Rate design is in a continuing stage of development and includes complex issues which have not been fully resolved. We have concluded that these regulations are not the appropriate vehicle to establish general rate design guidelines which would be followed by the PMAs in their development of various power rates. For these reasons, the section on rate design has been deleted from the regulations. This is discussed further under II(1) and II(2) below.

With the deletion of the cost recovery and rate design criteria sections, these regulations are now essentially limited to their primary purpose—procedures for public participation in the rate adjustment process.

The major issues raised by the oral and written comments are discussed in the next section of this statement followed by a section-by-section commentary explaining and discussing the minor and technical comments, and responses thereto.

Rate adjustments for the Bonneville Power Administration are not covered by these regulations because the newly enacted Pacific Northwest Electric Power Planning and Conservation Act establishes unique procedural requirements for new rate actions for Bonneville. It is anticipated that new regulations will be developed for application to Bonneville's rates only. However, the Act and any new regulations thereunder will not apply to the completion of the pending review of Bonneville's December 20, 1979, system rates and July 1, 1977, transmission rates.

These procedures shall become effective December 31, 1981, except that they will not apply to rate adjustments that have already been announced as required by § 903.13.

II. Major Issues

(1) Rate Design—PURPA Standards

As stated above, the entire section of the proposed regulations on rate design has been eliminated. This includes the proposed § 903.5(e), which would have required the PMAs to consider whether each of the six rate standards described in Section 111(d) of the Public Utility Regulatory Policies Act of 1978 (PURPA), Public Law 95-617, is appropriate and should be implemented with respect to any or all of the rates. As pointed out in the July 5, 1979, Federal Register notice the proposal went beyond the provisions of PURPA, which requires consideration of the standards only with respect to sales for purposes other than resale when such sales exceed 500 million kilowatthours annually. At this time, this requirement applies only to the Bonneville Power Administration and to the Central Valley and Boulder Canyon Projects of the Western Area Power Administration (the statement erroneously included the Parker-Davis Project in this list).

This proposal received a great deal of discussion and critical comment, based on the facts, among others, that Section 102(b) of PURPA expressly exempts sales for resale, which constitute the bulk of the sales by the PMAs; that the power marketing statutes contain special provisions for ratemaking and revenue levels for PMAs which are different from the statutory standards applicable to other utilities; and that there is wide variation among the relevant marketing circumstances of the more than twenty power systems of the PMAs.

In the time since the proposal was made, a good deal of progress has been made in promoting a better understanding of how the six Section 111 rate standards, as well as the five Section 113 standards, have application to the PMAs. Thus, the Bonneville Power Administrator, after holding a public hearing on July 19, 1979, and reviewing written comments, issued a determination order on November 19, 1979, explaining the extent to which the Section 111 standards were adopted for application to Bonneville rate design for all classes and types of customers. 44 FR 68948 (November 30, 1979). This policy had been followed in developing system rates which were placed in effect December 20, 1979, on an interim basis by the Assistant Secretary for Resource Applications. 44 FR 70517 (December 7, 1979).

The Western Area Power Administration issued a brochure on preconsideration of the PURPA standards and invited the public to discuss the subject at a hearing on November 6, 1980, and to submit written comments. 45 FR 69289 (October 20, 1980). The oral and written comments received in this proceeding are now being studied prior to issuance of a determination order.

Historically, many PURPA-type standards have been used in designing wholesale rates for the sale of Federal hydroelectric power. PMAs analyze costs to establish revenue requirements and consider this information in designing rates. Declining block rates for energy were once used by the PMAs but subsequently were found inappropriate and eliminated from rate schedules. Many of the PMAs for years have been effectively using various forms of load management measures in their rate schedules, such as scheduling limitations, loadshaping, capacity and energy overrun charges, etc. BPA has had a history of using seasonal rates for wholesale firm capacity and energy and also offered its direct service industrial customers interruptible rates some time ago. Southwestern has had interruptible capacity rates in effect since 1957. These examples demonstrate the willingness of the PMAs to implement PURPA-type standards where applicable.

Many of these PURPA-type standards, when applied appropriately in the design of PMA rates, can serve to implement the purposes of PURPA by encouraging conservation of energy, efficient use of resources and facilities, and equitable rates. The public participation process will provide an opportunity to examine these and other appropriate concepts.

The PMAs will continue to review and revise their power marketing practices on a system-by-system basis to serve the PURPA objectives. The Assistant Secretary for Resource Applications, working with the Administrators of the power administrations, and after receiving public comment, will consider the adoption of rate design guidelines, similar in form to the guidelines in RA 6120.2 on financial accounting and ratemaking, which will reflect the experience gained by the PMAs in their system-by-system approach to rate design.

(2) Rate Design—Cost Determination

§ 903.5(b) of the proposed procedures, after stating that a cost of service analysis should be made, contained the following sentence: "However, cost need not be the sole determinant of price." The fear was expressed that the sentence would be used by the Department arbitrarily to increase rates to market value to promote conservation which would be a radical departure from and in violation of the requirement of the power marketing statutes that rates shall be the lowest possible to recover costs consistent with sound business principles. Others recognized that such an interpretation was ruled out by the provision of § 903.5(a) that overall revenue levels were to be determined in accordance with the cost

recovery criteria of § 903.4(a), but nonetheless urged that the sentence be deleted as misleading in singling out one factor, namely cost, which would not be the sole determinant of price, while failing to recognize that there were numerous other factors which also might be considered but also would not be the sole determinant of the final judgment as to price. One participant in the August 17 hearing pointed out that the sentence dealt not with the determination of the costs to be recovered (this is determined by the power repayment studies) but rather the "allocation" of such cost recovery responsibility to the different units or classes of service.

The deletion of § 903.5 moots this controversy. This deletion does not change the intent, however. As the Western Area Power Administration points out in its comments, cost of service is not dispositive for a Federal hydrosystem where there are nonpower costs, such as irrigation assistance and desalinization plants, that were statutorily required to be repaid from power revenues and where there are no fuel costs. Also, in rate design, there are other factors to be considered than cost, such as conservation, efficient use of resources, equity, rate continuity, and ease of administration. However, revenue levels will continue to be established to recover costs, as required by law.

(3) Amortization Method

The statement issued with the proposed regulations in July 1979 contained the following explanation on the subject of amortization method:

"The provisions of the paragraph entitled 'Priority of Revenue Application,' 730 DM 4.5C(3), have been incorporated into § 903.4(b) except that, in view of the review mentioned above, the following sentence has been omitted: 'To the extent possible, while still complying with the repayment periods established for each increment of investment and unless otherwise indicated by legislation, amortization of the investment will be accomplished by application to the highest interest bearing investment first.' Although no change in the amortization practices will be made at this time, the omission of this sentence signifies that the subject is under review and that changes may be made following the conclusion of the ongoing study."

The omission of the quoted sentence received widespread criticism. Strong objections were voiced to any change in the present amortization method. The fear was expressed that because of the omission of the sentence, the Department would feel that it was free to go ahead and change the amortization method without affording an opportunity for public comment on any specific change that was under consideration.

The controversy over the omission of the sentence has served the purpose of alerting the customers to the fact that studies of alternative amortization methods are underway. We have decided to delete § 903.4, setting forth cost recovery criteria; § 903.10, requiring corrective action when studies show that revenues do not recover costs; and the references to power repayment studies, as these subjects are now covered by the Department of Energy guidelines in RA Order 6120.2. Section 8.c(3) of that order includes the same sentence that formerly was in 730 DM 4.5C(3) on the subject of amortizing the highest interest bearing investment first. The Department will not change that practice for any PMA without providing an opportunity for further public participation and comment.

(4) Information Procedures

A number of commenters questioned the adequacy of the opportunities provided in § 903.14–16 for customers and other interested members of the public to obtain adequate information concerning the factual and policy basis for the proposed rates. Without this information meaningful and constructive comments would not be possible.

One suggestion was that the holding of at least one public information forum should be mandatory rather than optional. This is a reasonable recommendation and has been adopted for all major rate adjustments.

Another comment was that the public information forums are usually held too early in the comment period to permit meaningful questioning, because the supporting studies are so complex that it takes a long time to become familiar with them and the data and assumptions that are incorporated in them. For this reason, it was suggested that the public comment forum provide an opportunity for questioning of the Government officials responsible for preparing these studies.

In general, there are two purposes to be served with respect to providing information about the proposed rates. One is to acquaint the public generally with the magnitude of the rate increase and with the principal reasons for it. The other is to allow rate experts employed or retained by the customers or other interested parties to have access to the detailed data, assumptions and studies utilized in developing the rates. Sometimes the public information forums serve the first function, sometimes the second, and sometimes a combination of both. The first purpose suggests that the forum should be held early; the second, that it should be held later.

The forums are not the only opportunity provided the public to obtain information about the rate proposal. § 903.14 states that the 90-day consultation period is to afford all interested persons "the opportunity to consult with and obtain information from the PMA" and "to examine backup data." § 903.15(b) states that "questions that involve voluminous data contained in the PMA records may best be answered by providing an opportunity for consultation and for a review of the records at the PMA offices." In other words, the rate experts may obtain from staff all necessary backup data and may examine all relevant records. In some cases, arrangements have been made for the rate experts to have access to the PMA's computer program so they can run their own alternative computer studies. Members of the public who are not rate experts also are welcome to meet with PMA staff to learn more about the rate proposal.

In many cases the small informal arrangements for informing the customers of the need for and basis for the proposed rate increase, including meetings with the customers, have fully satisfied the customers so that a formal forum is unnecessary. The Southeastern Power Administration, for example, has been particularly successful in utilizing this informal approach. However, to avoid the possibility that a genuine need for an information forum might be overlooked, the regulations have been revised to require that at least one such forum will be held for a major rate adjustment. This may, however, be combined with the public comment forum held in accordance with § 903.16. In other words, the one forum provides the opportunity of the PMA staff to explain the proposed rates, answer questions, and receive comments. Southeastern has done this with respect to its rate proceedings and has found that these meetings usually are brief, pro forma, and with very low attendance.

There are several reasons for holding the forum earlier in the process. One is to give the public a general understanding of the need for and the basis for the rate increase; another is to give the experts themselves a general understanding so that they know where to pursue further inquiries into the details. Lastly, as it may not be possible to answer some questions raised at the forum at the time, § 903.15 provides that they shall be answered at a subsequent

forum or in writing at least 15 days before the end of the consultation and comment period. If the forum is held late in the process, this requirement to answer the questions might further and unnecessarily extend it. Also, the suggestion that the public comment forum be utilized as an opportunity to ask questions of the persons who prepared the rate proposal leads to the dilemma that comments cannot always be made which are meaningful until after all questions are answered. By continually asking new questions at comment forums, the public participation process could be continued indefinitely.

In view of the variety of possible situations that might occur, and in the interest of giving the Administrator adequate flexibility, no minimum time period for holding the information forums has been written into the regulations. Normally, the forum will not be held until at least 30 days after the notice. The Administrator is always free to schedule additional forums upon request. In fact, this has happened on a number of occasions. The date for the second or continuation forum is usually discussed and announced at the first forum thus giving interested parties in attendance adequate notice.

Several commenters complained that the format of the public information forum would not allow for cross-examination because the opportunity to follow up an answer to the first question with a clarifying question generally is not available in open meetings with this format. For this, and other reasons, it was recommended that evidentiary or adjudicatory type hearings be required.

Contrary to the assumption of the suggestion, the public information forums have allowed follow up questioning similar to that which takes place under cross-examination. In the Central Valley Project rate proceedings, for example, one attorney spent many hours questioning the Government representatives. There have been two basic differences, however, between the forum and the normal evidentiary hearings before an administrative law judge. One is that the questions at the forums are addressed to a panel of Government witnesses, rather than just to one individual at a time. This has proven useful because no staff person is knowledgeable about all aspects of the repayment studies and rate design. On occasion, two or more members of the panel have disagreed among themselves as to the correct answer to a question. In such cases, and in cases where none of the members of the panel know the answer, the information is provided subsequently in writing, or at another forum, or, if it requires detailed data, the data is made available to the questioners and to others who might be interested.

The second difference is that the Chairman has interrupted the questioning by one person from time to time as convenient or appropriate, for example, to allow others to question who might not wish to stay for the whole session; or to take up questioning by all persons on each different topic as, for example, to take up all questions dealing with hydrology, then all questions dealing with purchased power expenses, and so forth.

The normal process of an adjudicatory hearing by which one lawyer cross-examines one witness at a time without interruption, followed by redirect examination and recross-examination, can be time consuming and inefficient. The experience of the information forums which have been held since 1975 in ratemaking for the PMAs has proven successful and efficient, in our opinion, in bringing out all of the relevant factual and policy issues without unnecessary delay.

Another suggestion that was made is to add a requirement that the decision of the Assistant Secretary be made on the record of the proceeding developed through the transcripts of the public information and public comment forums, the answers to questions, and the written comments that were received. We believe such a limitation would be unnecessarily restrictive and would harm rather than facilitate proper decisionmaking.

Although the record developed in the proceeding will serve as the principal body of material upon which the decision of the Assistant Secretary is made, there is additional material which might be utilized in reaching this decision. One major category of such additional material is the backup data for the supporting studies. Both the PMA and the Assistant Secretary may wish to question and review some of this data even though it was not questioned by the public during the comment period. A second category is the up-to-date financial entries for the most recent fiscal year for the power system. Not infrequently, the comment period extends from one fiscal year to the next and new historical data is available before the decision is made. A third category of additional material is studies, information and ideas developed by departmental experts in response to comments that are filed during the course of the comment period. A fourth category is a significant event that is known to the public or to power rate experts which may not have been introduced or acknowledged in the record. For example, a flood occurs that causes major damage to a project powerplant; Congress passes legislation authorizing a new project; an appropriation act is passed which cuts back the appropriation for a project under construction to the point that it is evident that the in-service date of a key powerplant will be delayed 1 or more years; a court issues an injunction suspending the construction of a major facility pending preparation of an environmental impact statement which, in turn, will delay the in-service date of a powerplant; or a new interest rate is required under RA 6120.2.11. Events of this kind may take place during the consultation and comment period, and purdent financial management would dictate that they be taken into consideration in making the final decision upon which the provisional rates are based.

(5) Role of the Administrator—Consultation

Several commenters suggested that the references in the proposed § 903.12 to "consultation" by the Administrator "with the Assistant Secretary, and through the Assistant Secretary with other departmental officials" before the Administrator develops Proposed Rates, and the reference in § 903.17 to "consultation" by the Administrator with the Assistant Secretary before the Administrator develops Revised Proposed Rates, violates the mandate of Section 302(a) of the Department of Energy organization Act, Public Law 95-91, that the rulemaking function shall be exercised by the Secretary "acting by and through" the Administrators. The argument is that the requirement for prior consultation defeats the intent of Congress that the rates will be developed to reflect regional needs and concerns and furthermore leads to the prospect that ratemaking policy will be set or at least heavily influenced by nameless individuals in Washington who will not be available for questioning at public information forums.

We believe that these concerns are exaggerated. Our interpretation of the Act is that Congress intended that the Secretary would exercise policy supervision over ratemaking but that all of the rate work and the original basic recommendations would be made by the Administrator reflecting the particular needs and concerns of the power systems and the interests of the region. This has been borne out in practice in the case of the 22 rate orders which were issued in the period from March 1,

1979, to July 1, 1980, pursuant to Delegation Order No. 0204–33. Nine of these rate orders approved rate increases, 12 were rate extensions, and one was a rate decrease. In some cases there was consultation between the Administrator and the Assistant Secretary prior to the announcement of a proposed rate or revised proposed rate and in some cases there was not.

In all cases there was consultation with the Assistant Secretary in the development of the rate order. As it turned out, contrary to earlier expectations, there was virtually no consultation on individual rate cases with the Administrator of the Economic Regulatory Administration or the Assistant Secretary for Policy and Evaluation. This occurred in large part because ratemaking for the PMAs is highly specialized and complex and bears little relationship to ratemaking for regulated utilities.

Because of our decision to eliminate provisions relating to rate design, cost recovery criteria, and power repayment studies, we have eliminated § 903.12. In doing so, however, policy consultation between the Assistant Secretary and each Administrator will continue at various steps of the ratemaking process as appropriate and that the Assistant Secretary will consult with other policy persons in the Department if special occasions arise where this is appropriate. These consultative processes, however, are internal, and do not need to be spelled out in these procedures. Any such consultations do not detract from the requirement in § 903.21 that a statement shall be issued explaining the principal factors leading to the Assistant Secretary's decision. Other DOE offices have the option of submitting comments in response to the advance announcement, § 903.11; or during the consultation and comment period, § 903.14.

§ 903.12 as originally proposed included the description of certain supporting statements A through E which we anticipated would be required by the FERC when rates were approved by the Assistant Secretary for Resource Applications on an interim basis and submitted to the FERC for approval on a final basis. Detailed requirements concerning these statements have not been finally determined. They may be included in future regulations by the FERC.

(6) Need for Common Procedures

The proposal to establish common procedures for all five PMAs was both praised and condemned on the grounds that it might restrict the flexibility of the Administrators to respond to regional concerns. We do not believe this will be a problem for the four PMAs to which these procedures apply because the procedures have been drafted to provide maximum flexibility. Bonneville has been excluded because of the unique procedural provisions in the Pacific Northwest Electric Power Planning and Conservation Act.

Any drawback of this kind is outweighed by the advantage to be gained from establishing standard terminology and standard steps in the ratemaking process. This will facilitate the ability of the public to understand and to make input to rate development and will facilitate the review by the FERC in the exercise of its responsibilities under Delegation Order No. 0204–33.

(7) Minor Rate Adjustments; Rates for minor new services

§ 903.23 of the proposed regulations waived the notice and comment requirements for rate adjustments designated as "minor," for extensions of existing rates, and for certain rates for "new services." This received considerable criticism. In response to these comments, the regulations adopted herewith include definitions of "new service," "minor new service," and "major rate adjustment," revise the definition of "minor rate adjustment," and eliminate the waiver of all notice and comment requirements; but substitute a requirement for 30 days' notice for minor rate cases, with the holding of forums optional. The distinctions between minor and major rate adjustment procedures have been incorporated in § 903.14–16.

III. Section-by-Section Commentary

Title

It was suggested that the title of these regulations be expanded to include reference to rate standards or criteria because of the inclusion of § 903.4 on cost recovery and § 903.5 on rate design. We recognize that this was a valid suggestion, but it has been rendered unnecessary because the two sections have been deleted.

In view of the fact that the shortened procedures deal almost entirely with the subject of "public participation," we have added those words to the title.

Authority

Western has recommended that the citations to the authority for the regulations be amended to include a reference to Section 9 of the Flood Control Act of 1944. Section 9 authorizes the Pick-Sloan Missouri Basin Program. Thus, it is only one of hundreds of laws which authorizes or otherwise relates to individual projects or power systems. To cite them individually would be a major undertaking. Instead they are now referred to generally under the last phrase "the acts specifically applicable to individual projects or power systems."

§ 903.1—*Applications*

There were several objections to the provision in § 903.1(b) authorizing the Administrators to apply these new procedures to pending rate adjustment proceedings. Another comment was that the decision as to whether they should be applied to proceedings should be made by the Assistant Secretary, not by the Administrator.

The new procedures eliminate the requirement applicable only under Western procedures that the proposed decision of the Assistant Secretary be published for a final round of comments before the Assistant Secretary issues a rate order approving rates on an interim basis. To avoid controversy over the objections raised, the provision authorizing the Administrator to apply the new procedures to pending proceedings has been eliminated.

These procedures will supersede those published by Western entirely, and will supersede those published by Southeastern only insofar as those published procedures apply to rate adjustments. They shall become effective immediately except that they will not apply to rate adjustments that have already been announced as required by § 903.13.

§ 903.2—*Definitions*

New service. A new definition has been added for a "new service." It is defined as "service not previously provided." The term "new service" was used in connection with § 903.23 of the proposed procedures, which waived all public comment requirements for "rates for a new project or system or rates for a new service." The fear was expressed by several commenters that this would permit a loophole under which existing services would be simply covered by a new rate. This was not the intent, and the new definition would prevent this.

Minor new service. A new definition has been added for a "minor new service," which is included in the definition of a minor rate adjustment. The new definition is employed to describe various situations in which simplified rate procedures may be utilized. Four different situations are described. The first is for a rate for a new service which will produce less than a one percent change in the annual revenues of the power system. Examples

include rates for the provision of emergency service as part of a power pool or a rate for the sale of reserves or standby service.

The second is rates for a new power system which has either annual sales normally less than 100 million kilowatthours or an installed capacity of less than 20,000 kilowatts. It is anticipated that a number of these new power systems may be established as the Army Corps of Engineers or the Water and Power Resources Service install small powerplants at existing Federal dams or at undeveloped sites.

Third, there are services which will not be provided for more than one year. An example is the special contract rate of the Bonneville Power Administration for the sale of withdrawn Hanford energy during the period January 1, 1978, through June 30, 1978, which was approved by order of the ERA and published in the Federal Register on October 3, 1978 (43 FR 45630).

The fourth is for the temporary disposition of the output of a new powerplant for not more than one year. An example of this is the rate for the short-term sales of the output of the Laurel Project, Kentucky, which was approved by an order by the ERA, published on April 26, 1978 (43 FR 17857), and extended by ERA orders published on June 15, 1978 (43 FR 25856), September 26, 1978 (43 FR 43547), and January 15, 1979 (44 FR 1445), and by a FERC order published on September 4, 1979 (44 FR 51654).

Minor rate adjustment. The definition of a "minor rate adjustment" has been revised to exclude the continuation of an existing rate, because this is now covered in § 903.23 by use of the term "rate extensions," and to add two other conditions which qualify a rate as a minor rate adjustment. These are (1) a rate adjustment for a power system which has either annual sales normally less than 100 million kilowatthours or an installed capacity less than 20,000 kilowatts, or (2) is a rate for a minor new service. The addition numbered (1) above was recommended by Western to take care of the situation of a possible adjustment in the rate for a small project which has a minor impact relative to the overall area power supply.

Major rate adjustment. A new definition has been added for a "major rate adjustment." It is defined as "a rate adjustment other than a minor rate adjustment." The new term is used in connection with § 903.14 to make a 90-day consultation and comment period applicable only to major rate adjustments, whereas, a shorter time period of 30 days would be applicable to minor rate adjustments.

Also, the term is used in connection with § 903.15 and § 903.16 to make public information and public comment forums mandatory for major rate adjustments, but optional for minor rate adjustments.

Power system. The term "project or system" utilized in the proposed regulations to denote the operating unit to which the rate applies is cumbersome and confusing. The term "power system" has been substituted. This phrase was used in 730 DM 4 and has been continued in RA 6120.2. The change leads to the desirable result that the same term "power system" is used both in the published procedures and in these internal Department of Energy policy guidelines. For clarity, the definition has been modified slightly from that used in RA 6120.2.

Rate adjustment. The definition of "Rate adjustment" has been revised to clarify that it does not include changes in the monetary charge made pursuant to a formula stated in a rate schedule or contract. Some examples are, certain generating charges, fuel replacement sales, purchased power passthrough, and transmission service over a joint transmission system where charges vary as operation and maintenance costs change.

Rate terms. One suggestion was that the use of the terms "Revised Proposed Rate," "Substitute Rate," and "Proposed Substitute Rate" be deleted as unnecessary. The term "Revised Proposed Rate" was recommended by Bonneville to distinguish the proposal coming after the conclusion of the initial public comment period from the proposal at the beginning of that period. This term was utilized by Bonneville in connection with its public comment process which ran for almost a year from August 1978 to August 1979 and has proven to be useful. The term "Substitute Rate" is useful in drafting the regulations to identify a rate which is being put into effect following FERC disapproval of a provisional rate. It is a term that is used in Delegation Order 0204-33. The term "Proposed Substitute Rate" is useful for drafting purposes to denote a proposed rate which responds to FERC disapproval of a provisional rate and which is under consideration while a provisional rate is still in effect.

The heading for former subsection (1) on "Rate definitions" has been changed to "Rate types."

The words "by the Assistant Secretary" have been inserted after "submitted" in the definition of "Substitute Rate" for clarification.

One commenter suggested that "rates" be defined the way the FERC defines the term. The FERC definition of "rate schedule" is far too broad for use in these procedures. It covers all classifications, practices, rules, regulations or contracts which in any manner affect or relate to electric service. Use of so broad a definition would require submission to the FERC of matters relating to power and transmission operations and contracts which are reserved by Section 302(a) of the Department of Energy Organization Act to the PMAs. It was not the intent of the delegation order that the FERC review these matters. The review is limited to the monetary charges, as indicated in the definition that is used.

Definitions deleted. The definitions of "power repayment study" and "rate design" have been eliminated.

§ 903.11—*Advance Announcement of Rate Adjustment*

This section provides that the Administrator may give advance notice of his determination that new or revised rates are under consideration and give the public an opportunity to submit advance comments on the rate adjustment process. Several commenters suggested that the announcement should be made mandatory rather than permissive so that public involvement will always occur prior to the Administrator's notice of proposed rates. This suggestion has not been adopted in order to provide greater flexibility and to reduce the time needed in appropriate cases to place revised rates into effect. The PMAs are in regular communication with their customers and are able to judge whether there is sufficient controversy to justify an advance announcement.

A sentence was added to require consideration of any comments received.

§ 903.13—*Notice of Proposed Rates*

It was suggested that to minimize delays, the Administrator should be required to mail copies of all relevant studies to customers at the time notice of proposed rates is given rather than to mail such material upon request. This will be done in most cases, particularly where the customers have previously expressed an interest in rates and ratemaking, but we do not believe it is wise to require it in every case. This could be unnecessarily cumbersome where there are a large number of customers who do not have an interest in detailed rate studies.

Another suggestion was that customers be allowed access to the data base, including computer programs used to prepare the current and revised power repayment studies, Statements A through E, and the rate design study, on

reasonable terms and conditions at the time the proposed rate increase is noticed in the Federal Register. The PMAs have made and will continue to make backup data available to any interested customer or other person upon request at reasonable times and in a reasonable manner. This is consistent with § 903.14; thus, resort to the formalities of the Freedom of Information Act is not necessary.

Subsection (a) has been revised to require that the Notice contain an explanation of the need for and derivation of the Proposed Rates. Subsection (b) has been revised to eliminate the references to specific studies and statements because the provisions relating to these studies and statements have been deleted. Upon request, customers or interested persons will be furnished the principle documents used in developing the Proposed Rates.

§ 903.14—*Consultation and Comment Period*

Several commenters suggested that the minimum of 90 days for the consultation and comment period be increased to 180 days, arguing that 90 days is too short a time to enable effective examination by customers of voluminous repayment studies and rate design studies and the backup data. The experience to date has been that when customers have requested more time and have had good reason for their requests, the extension has been granted. We are reluctant to extend the minimum for all cases because experience has shown that 90 days is ample for most rate adjustments.

It was suggested that this section be revised to require the Administrators to prepare and circulate a service list of all interested parties to the rate proceedings to assure that each person commenting knows what the others have said. This suggestion reflects what has been done in actual practice in some cases. A sentence has been added to the section requiring the Administrator to maintain, and distribute upon request, a list of interested persons. This list is not called a "service list" because this is not an adversary proceeding similar to the normal evidentiary or adjudicatory proceeding before an administrative law judge. Also, a requirement for formal intervention has not been included, nor a requirement that each person submitting comments send copies to everyone else on the list, because such requirements would make the proceedings unnecessarily formal and might discourage some persons with a legitimate interest in the proceedings from participation.

Another suggestion was that a 90-day pre-Federal Register notice to customers be required to allow a knowledgeable exchange of information on an informal basis. Under § 903.11 dealing with the advance announcement, we feel that the Administrator has discretion to allow sufficient time for exchange of information and ideas with the customers and other interested parties.

This subsection was revised to require a 90-day consultation and comment period for major rate adjustments and a 30-day consultation and comment period for minor rate adjustments.

§ 903.15—*Public Information Forum(s)*

Comments relating to the conduct of the information forums, including recommendations that they be adjudicatory-type hearings with the right of formal cross-examination are discussed under II(4) above. As stated therein, the section has been revised to require that at least one public information forum be held.

Subsection 903.15(a) was revised to make public information forums mandatory for major rate adjustments, but optional for minor rate adjustments.

§ 903.16—*Public Comment Forum(s)*

Comments relating to the conduct of public comment forums also are discussed under II(4) above.

Subsection 903.16(a) was revised to make public comment forums mandatory for major rate adjustments, but optional for minor rate adjustments.

§ 903.17—*Revised Proposed Rates*

The reference to consultation with the Assistant Secretary has been deleted for the reasons explained under II(5) above.

§ 903.21—*Provisional Rates*

The suggestion that the decision should be made on the basis of the record is discussed under II(4) above.

Several commenters questioned the statement in subsection (a) that "The Administrator shall develop rates which, in the Assistant Secretary's judgment, should be confirmed, approved, and placed in effect on an interim basis," on the grounds that this violates the Administrator's statutory authority and responsibility to propose rates. This does not follow. At this stage of the proceedings, it is necessary for the Assistant Secretary to exercise the function of policy supervision of ratemaking by approving a rate which is deemed acceptable. Inasmuch as the Assistant Secretary does not have the rate staff, the basic data or the computer capability necessary to develop rates, the rate work itself must be done by the PMA.

One commenter expressed opposition to implementation of provisional rates in every case prior to independent review by the FERC. Instead, it was suggested that the Administrator's proposed rates only go into effect after the FERC's approval. The experience of the last year shows that the FERC may take a relatively long time before approving rate increases on a final basis. It would place the financial position of most power systems in jeopardy if revenues from increased rates could not be collected during this delayed period on an interim basis. The customers are protected by the provisions for refunds of any overpayment with interest if the rate finally approved by the FERC is lower than the provisional rate. The Assistant Secretary retains the option to have the rate go into effect upon final approval by the FERC.

§ 903.22—*Final Rate Approval*

The comments indicate that the refund provisions under the delegation order and under these regulations are confusing. A new subsection (f) has been added to help eliminate this confusion.

§ 903.23—*Rate Extensions*

A separate section is included in the regulations to explain how rate extensions are handled. In the proposed regulations, rate extensions were included in the definition of minor rate adjustments, but this led to confusion.

Basically, it is anticipated that rate extensions will fall into three categories. One category would include provisional rates for power systems approved by the Assistant Secretary for Resource Applications on an interim basis for a fixed period and not expected to be approved or disapproved by the FERC within the fixed period. Thus, it becomes necessary to extend the interim approval of provisional rates to give the FERC additional time to act on the original rate approval by the Assistant Secretary for Resource Applications. A second category would be rates for power systems which require a rate adjustment to be in compliance with repayment criteria, but for any one or more of several reasons, revised rates have not been developed which will be approved by the Assistant Secretary for Resource Applications prior to the expiration of the approval of the existing rates. A third category of rate extension would be rates for power systems which do not need a rate adjustment to be in compliance with repayment criteria.

For a rate extension previously confirmed and approved by the FERC or prior authority, a 30-day notice is required unless shortened for good

cause, the consultation and comment period shall be as provided in § 903.14, and public forums may be held as provided in § 903.15–16. Rate extensions shall be governed by § 903.21(d) and § 903.22.

Provisional rates may be extended by the Assistant Secretary for Resource Applications without advance notice or comment. Notice of such action shall be published in the Federal Register.

Entities who commented—Listed below are the parties that submitted comments in response to the proposed procedures published in the Federal Register on July 5, 1979 (44 FR 39184), and those that presented comments at hearings held in Washington, D.C., on July 27 and August 17, 1979:

*American Public Power Association (APPA)
2. Eugene Water and Electric Board, Oregon
3. City of Tacoma, Washington
4. Intercompany Pool Companies, Seattle, Washington
5. Public Power Council, Vancouver, Washington
6. Public Utility District of Clark County, Vancouver, Washington
*7. Missouri Basin Municipal Power Agency
8. Municipal Electric Authority of Georgia
9. Plains Electric Generation & Transmission Cooperative, Inc., New Mexico
10. City of Doerun, Georgia
11. City of East Point, Georgia
12. City of Barnesville, Georgia
13. City of Thomasville, Georgia
14. City of Griffin, Georgia
15. Big Rivers Electric Corporation, Southern Illinois Power Cooperative, East Kentucky Power Cooperative, and Hoosier Energy Corporation
16. Fitzgerald Water, Light & Bond Commission, Georgia
17. City of Douglas, Georgia
18. City of Moultrie, Georgia
19. Electric Cities of Georgia
20. Tri-State Generation & Transmission Association, Inc.
21. Irrigation & Electrical Districts Association of Arizona (IEDA)
22. San Diego Gas & Electric
23. Northern California Power Agency
24. Intermountain Rural Electric Association, Inc. (IREA)
25. National Rural Electric Cooperative Association (NRECA)
26. Committee on Power for the Southwest, Inc., Tulsa, Oklahoma
27. East River Electric Power Cooperative, Inc.
28. Irrigation Districts, Central Valley Project, California
29. Intermountain Consumer Power Association (ICPA), Utah
30. City of Page, Arizona
31. Arizona Power Authority
32. Basin Electric Power Cooperative, North Dakota
33. Bureau of Reclamation, Department of the Interior
*34. Mid-West Electric Consumers Association, Inc.
*35. Department of Water and Power of the City of Los Angeles
36. California Energy Commission
37. Western Area Power Administration
*38. Arizona Municipal Power Users' Association (AMPUA)
*39. Enerjoules Limited, Mukilteo, Washington
*40. Colorado River Energy Distribution Association, Inc. (CREDA) and Salt River Project Agricultural Improvement and Power District (Salt River)
*41. R. W. Allin, Oak Harbor, Washington

In view of the foregoing, the Department of Energy hereby adds a new Part 903 to Title 10, Code of Federal Regulations entitled "Procedures for Public Participation in Power and Transmission Rate Adjustments and Extensions" as set forth below:

Issued in Washington, D.C., December 23, 1980.

Ruth M. Davis,

Assistant Secretary, Resource Applications.

The Department of Energy hereby adds Subpart A of Part 903 to Title 10, Code of Federal Regulations as set forth below:

PART 903—POWER AND TRANSMISSION RATES

Subpart A—Procedures for Public Participation in Power and Transmission Rate Adjustments and Extensions for the Alaska, Southeastern, Southwestern, and Western Area Power Administrations

Sec.

903.1 Purpose and scope; application.
903.2 Definitions.
903.11 Advance announcement of rate adjustment.
903.13 Notice of proposed rates.
903.14 Consultation and comment period.
903.15 Public information forum(s).
903.16 Public comment forum(s).
903.17 Revised proposed rates.
903.21 Provisional rates.
903.22 Final rate approval.
903.23 Rate extensions.

Authority: Sections 301(b), 302(a), and 644 of Department of Energy Organization Act Pub. L. 95–91 (42 U.S.C. 7101 *et seq.*); Section 5 of the Flood Control Act of 1944 (16 U.S.C. 825s); the Reclamation Act of 1902 (43 U.S.C. 372 *et seq.*), as amended and supplemented by subsequent enactments, particularly Section 9(c) of the Reclamation Project Act of 1939 (43 U.S.C. 485h(c)); and the acts specifically applicable to individual projects or power systems.

Subpart A—Procedures for Public Participation in Power and Transmission Rate Adjustments and Extensions for the Alaska, Southeastern, Southwestern, and Western Area Power Administrations

§ 903.1 Purpose and scope; application.

(a) These regulations establish procedures for the development, and for the confirmation and approval on an interim basis by the Assistant Secretary for Resource Applications, of new, revised, or extended power and transmission rates of the Alaska Power Administration, the Southeastern Power Administration, the Southwestern Power Administration, and the Western Area Power Administration, and opportunities for interested members of the public to participate in the development of such rates. These regulations supplement Delegation Order No. 0204–33 dated December 21, 1978, of the Secretary of Energy, effective January 1, 1979, which was published in the Federal Register on December 28, 1978 (43 FR 60636), with respect to the activities of the Assistant Secretary for Resource Applications and the Power Marketing Administrators.

(b) These regulations shall apply to all power and transmission rate adjustment proceedings for the four power marketing administrations which are commenced after these regulations become effective. Thus, for all new rate proceedings they supersede the informal practices followed by the Alaska and Southwestern Power Administrations and supersede the following published regulations only as they apply to rate adjustments: (1) for the Southeastern Power Administration, the "Procedure for Public Participation in the Formulation of Marketing Policy," 43 FR 29186 (July 6, 1978); and (2) for the Western Area Power Administration, the "Procedures for Public Participation in General Adjustments in Rates for Power Marketed by the Western Area Power Administration," 43 FR 12076 (March 23, 1978), as amended by 44 FR 7796 (February 7, 1979).

§ 903.2 Definitions.

As used herein—

(a) "Administrator" means the Administrator of the Power Marketing Administration (PMA) whose rate is involved in the rate adjustment, or anyone acting in such capacity.

(b) "Assistant Secretary" means the Assistant Secretary for Resource

* Comments received during hearings on July 27 and August 17, 1979.

Applications of the Department, or anyone acting in such capacity.

(c) "Department" means the Department of Energy including the PMAs and excluding the Federal Energy Regulatory Commission.

(d) "FERC" means the Federal Energy Regulatory Commission.

(e) "Major adjustment" means a rate adjustment other than a minor rate adjustment.

(f) "Minor new service" means a new service which (1) will produce less than a 1 percent change in the annual revenues of the power system, or (2) is for a new power system which has either annual sales normally less than 100 million kilowatthours or an installed capacity of less than 20,000 kilowatts, or (3) will not be provided for more than one year, or (4) is for the temporary disposition, for not more than one year, of the output of a new powerplant.

(g) "Minor rate adjustment" means a rate adjustment which (1) will produce less than a 1 percent change in the annual revenues of the power system, or (2) is for a power system which has either annual sales normally less than 100 million kilowatthours or an installed capacity of less than 20,000 kilowatts, or (3) is a rate for a minor new service.

(h) "New service" means a service not previously provided. The term includes, but is not limited to, service from a new powerplant, where this is sold under a separate rate, or service from a new power system.

(i) "Notice" means the statement which informs customers and the general public of Proposed Rates, Revised Proposed Rates, Proposed Substitute Rates, rate extensions or proposed rate extensions, opportunities for consultation and comment, and public information and public comment forums. The Notice shall be by and effective on the date of publication in the Federal Register. Whenever a time period is provided, the date of publication in the Federal Register shall determine the commencement of the time period, unless otherwise provided in the Notice. The Notice shall include the name, address, and telephone number of the person to contact if participation or further information is sought.

(j) "Power Marketing Administration" or "PMA" means Alaska Power Administration (APA), Bonneville Power Administration (BPA), Southeastern Power Administration (SEPA), Southwestern Power Administration (SWPA), Western Area Power Administration (WAPA), or such additional PMAs as may be created to administer power marketing functions of the Department.

(k) "Power system" means a powerplant or a group of powerplants and related facilities, including transmission facilities or a transmission system, that the PMA treats as one unit for the purpose of establishing rates and demonstrating repayment.

(l) "Rate" means the monetary charge or the formula for computing such a charge for any electric service provided by the PMA, including but not limited to charges for capacity (or demand), energy, or transmission service, and discounts or surcharges; however, it does not include leasing fees, service facility charges, or other types of facility use charges. A rate may be set forth in a rate schedule or in a contract.

(m) "Rate adjustment" means a change in an existing rate or rates, or the establishment of a rate or rates for a new service. It does not include a change in rate schedule provisions or in contract terms, if such change does not involve a change in the price per unit of service, nor does it include changes in the monetary charge pursuant to a formula stated in a rate schedule or a contract.

(n) "Rate schedule" means a document identified as a "rate schedule," "schedule of rates" or "schedule rate" which designates the rate or rates applicable to a class of service specified therein and may contain other terms and conditions relating to the service.

(o) Rate types:

(1) "Proposed Rate" means a rate revision or a rate for a new service which is under consideration by the Department on which public comment is invited.

(2) "Revised Proposed Rate" means a revision of a Proposed Rate on which, in the Administrator's judgment, further public comment should be invited.

(3) "Provisional Rate" means a rate that has been confirmed and approved on an interim basis by the Assistant Secretary.

(4) "Proposed Substitute Rate" means a proposed substitute for a Provisional Rate that has been disapproved by the FERC on which, in the Administrator's judgment, further public comment should be invited.

(5) "Substitute Rate" means a rate submitted by the Assistant Secretary to the FERC as a proposed substitute for a Provisional Rate or a previous Substitute Rate that has been disapproved by the FERC.

§ 903.11 Advance announcement of rate adjustment.

The Administrator may announce that the development of rates for a new service or revised rates for an existing service is under consideration. The announcement shall (1) specify the rates which are to be developed or revised, and (2) contain any other pertinent information relevant to the rate adjustment process. The announcement may be through direct contact with customers, at public meetings, by press release, by newspaper advertisement, and/or Federal Register publication. Written comments relevant to rate policy and design and to the rate adjustment process may be submitted by interested parties in response to the announcement. Any comments received shall be considered in the development of Proposed Rates.

§ 903.13 Notice of proposed rates.

(a) The Administrator shall give Notice that Proposed Rates have been prepared and are under consideration. The Notice shall include:

(1) The Proposed Rates;

(2) An explanation of the need for and derivation of the Proposed Rates;

(3) The location(s) at which data, studies, reports or other documents used in developing the Proposed Rates are available for inspection and/or copying;

(4) The date(s), time(s) and location(s) of any initially scheduled public information and comment forum; and

(5) Addresses to which written comments relative to the Proposed Rates may be submitted.

(b) Upon request, customers of the power system and other interested persons will be provided with copies of the principal documents used in developing the Proposed Rates.

§ 903.14 Consultation and comment period.

All interested persons will have the opportunity to consult with and obtain information from the PMA, to examine back-up data, and to make suggestions for modification of the Proposed Rates for a period ending (1) (90) days, in the case of major rate adjustments, or 30 days in the case of minor rate adjustments, after the Notice of Proposed Rates is published in the Federal Register, except that such periods may be shortened for good cause shown; (2) 15 days after written answer is provided pursuant to § 903.15(b); (3) 15 days after the close of the (last) public comment forum described in § 903.16 below; or (4) such other time as the administrator may designate; whichever is later. At any time during this period, interested persons may submit written comments to the PMA regarding the Proposed Rates. The Administrator may also provide additional time for the submission of written rebuttal

comments. All written comments shall be available at a designated location for inspection, and copies also will be furnished on request for which the Administrator may assess a fee. Prior to the action described in § 903.21, the Administrator may by appropriate announcement postpone any procedural date or make other procedural changes for good cause shown at the request of any party or on the Administrator's own motion. The Administrator shall maintain, and distribute on request, a list of interested persons.

§ 903.15 Public information forum(s).

(a) One or more public information forums shall be held for major rate adjustments and may be held for minor rate adjustments, to explain, and to answer questions concerning, the Proposed Rates and the basis of and justification for proposing such rates. The number, date(s) and location(s) of such forum(s) will be determined by the Administrator in accordance with the anticipated or demonstrated interest in the Proposed Rates. Notice shall be given in advance of such forum(s) and shall include the purpose, date, time, place, and procedures for such forum(s). A public information forum may be combined with a public comment forum held in accordance with § 903.16.

(b) The Administrator shall appoint a forum chairperson. Questions raised at the forum concerning the Proposed Rates and the studies shall be answered by PMA representatives at the forum, at a subsequent forum or in writing at least 15 days before the end of the consultation and comment period. However, questions that involve voluminous data contained in the PMA records may best be answered by providing an opportunity for consultation and for a review of the records at the PMA offices. As a minimum, the proceedings of the forum(s) held at the one principal location shall be transcribed. Copies of all documents introduced, and of questions and written answers shall be available at a designated location for inspection and copies will be furnished by the Administrator on request for which a fee may be assessed. Copies of the transcript may be obtained from the transcribing service.

§ 903.16 Public comment forum(s).

(a) One or more public comment forums shall be held for major rate adjustments and may be held for minor rate adjustments, to provide interested persons an opportunity for oral presentation of views, data, and arguments regarding the Proposed Rates. The number, date(s), and location(s) of such forum(s) will be determined by the Administrator in accordance with the anticipated or demonstrated interest in the Proposed Rates. Notice shall be given at least 30 days in advance of the first forum at each location and shall include the purpose, date, time, place, and other information relevant to the forum, as well as the locations where pertinent documents are available for examination and/or copying.

(b) The Administrator shall designate a forum chairperson. At the forum, PMA representatives may question those persons making oral statements and comments. The chairperson shall have discretion to establish the sequence of and time limits for oral presentations and to determine if the comments are relevant and noncumulative. Forum proceedings shall be transcribed. Copies of all documents introduced shall be available at a designated location for inspection, and copies shall be furnished on request for which the Administrator may assess a fee. Copies of the transcript may be obtained from the transcribing service.

§ 903.17 Revised proposed rates.

During or after the consultation and comment period and review of the oral and written comments on the Proposed Rates, the Administrator may develop Revised Proposed Rates upon which, in the Administrator's judgment, further public comment should be invited. In such a case, the Administrator shall afford interested persons at least 30 days to submit further written comments to the PMA regarding the Revised Proposed Rates and may convene one or more additional public information and/or public comment forums. The Administrator shall give Notice of any such additional forums and opportunity to submit written comments.

§ 903.21 Provisional rates.

(a) Following completion of the consultation and comment period and review of any oral and written comments on the Proposed Rates, or Revised Proposed Rates, the Administrator shall develop rates which, in the Assistant Secretary's judgment, should be confirmed, approved, and placed in effect on an interim basis. A statement shall be prepared and made available to the public of the principal factors on which the Assistant Secretary's decision was based. It shall include an explanation responding to the major comments, criticisms, and alternatives offered during the comment period.

(b) The Assistant Secretary shall set the effective date for the rates he or she has confirmed and approved on an interim basis (Provisional Rates). The effective date shall be at least 30 days after the Assistant Secretary's decision, except that the effective date may be sooner when appropriate to meet a contract deadline, to avoid financial difficulties, to provide a rate for a new service, or to make a minor rate adjustment.

(c) The effective date of the Provisional Rates for the purpose of billing may be adjusted by the Administrator to coincide with the beginning of the next billing period following the date set by the Assistant Secretary.

(d) The Provisional Rates shall remain in effect until (1) they are confirmed and approved on a final basis by the FERC under § 903.22(b), (2) the rates last previously confirmed and approved on a final basis become effective under § 903.22(d), (3) higher Substitute Rates are confirmed and approved and placed in effect by the FERC under § 903.22(e), (4) lower Substitute Rates are confirmed and approved on a final basis by the FERC under § 903.22(f), or (5) they are superseded by other Provisional Rates placed in effect by the Assistant Secretary, whichever occurs first.

§ 903.22 Final rate approval.

(a) Following confirmation and approval of rates on an interim basis, the Provisional Rates shall be submitted promptly to the FERC for confirmation and approval on a final basis, together with such supporting data, studies and documents as the FERC may require, transcripts of forums, written answers to questions, written comments, and the statement of principal factors leading to the Assistant Secretary's decision. A listing of current customers and other participants in the rate proceeding also shall be furnished.

(b) If the FERC confirms and approves Provisional Rates on a final basis, such confirmation and approval shall be effective as of the date such rates were placed in effect by the Assistant Secretary.

(c) In the event Provisional Rates or Substitute Rates are disapproved by the FERC, the Assistant Secretary shall develop, acting by and through the Administrator, and submit to the FERC Substitute Rates which take into consideration the reasons given by the FERC for its disapproval. A statement explaining the Assistant Secretary's decision shall accompany the submission. Prior to such submission, the Assistant Secretary and the Administrator may develop Proposed Substitute Rates on which, in the Administrator's judgment, further public

comment should be invited, in which case the Administrator shall afford interested persons at least 30 days to submit written comments to the PMA and may convene one or more additional public information and/or public comment forums. The Administrator shall give Notice of any such additional forums and opportunity to submit written comments.

(d) A Provisional Rate that is disapproved by the FERC shall remain in effect, until one of the events described in § 903.21(d)(3), (4) or (5) occurs; *Provided,* That if the Assistant Secretary does not file a Substitute Rate within 120 days of the disapproval or such greater time as the FERC may provide, and if the rate has been disapproved because the FERC determined that it would result in total revenues in excess of those required by law, the rate last previously confirmed and approved on a final basis will become effective on a date and for a period determined by the FERC and revenues collected in excess of such rate during the interim period will be refunded with interest to the extent determined by the FERC.

(e) If a Substitute Rate confirmed and approved on a final basis by the FERC is higher than the rate in effect on an interim basis, such higher rate shall become effective on a subsequent date set by the FERC.

(f) In the case where a Substitute Rate confirmed and approved by the FERC on a final basis is lower than the rate in effect on an interim basis, such lower rate shall become effective as of the date the higher rate was placed in effect on an interim basis by the Assistant Secretary, and the amount of the refund will be the overpayment on all transactions, that is, the difference between the amount paid for the transaction and the amount that would have been paid under the Substitute Rate, unless the FERC determines that there will be no refund because the administrative cost of a refund would exceed the amount to be refunded. In the case covered by the proviso in subsection (d) the amount of the refund is determined by the FERC. In both cases, the amount of the interest on the refund will be determined by the FERC.

(g) A rate confirmed and approved by the FERC on a final basis shall remain in effect for such period or periods as the FERC may provide or until the Assistant Secretary places a new Provisional Rate into effect; *Provided,* That the Assistant Secretary may extend the rate on an interim basis beyond the period specified by the FERC as provided in § 903.23.

§ 903.23 Rate extensions.

(a) The following regulations shall apply to the extension of rates which were previously confirmed and approved by the FERC, the Federal Power Commission or the Administrator of the Economic Regulatory Administration, or established by the Secretary of the Interior:

(1) The Administrator shall give Notice of the proposed extension at least 30 days before the expiration of the prior confirmation and approval, except that such period may be shortened for good cause shown.

(2) the Administrator shall allow for consultation and comment, as provided in § 903.14, for such period as he or she may provide. One or more public information and comment forum(s) may be held, as provided in § 903.15 and § 903.16, at such time(s) and location(s) and with such advance notice as the Administrator may provide.

(3) Following the conclusion of the consultation and comment period, the Assistant Secretary may extend the rates on an interim basis. Such extension shall be governed by § 903.21(d) and § 903.22.

(b) Provisional Rates may be extended by the Assistant Secretary without advance notice or comment. The Assistant Secretary shall publish notice in the Federal Register of such extension and shall promptly advise the FERC of the extension.Q02

[FR Doc. 80-40696 Filed 12-30-80; 8:45 am]
BILLING CODE 6450-01-M

federal register

Wednesday
December 31, 1980

Part XXII

Department of Energy

Western Area Power Administration

Colorado River Storage Project, Order Confirming, Approving, and Placing Increased Power Rates in Effect on an Interim Basis

DEPARTMENT OF ENERGY

Western Area Power Administration

Colorado River Storage Project; an Order Confirming, Approving, and Placing Increased Power Rates in Effect on an Interim Basis

AGENCY: Western Area Power Administration, Department of Energy.

ACTION: Notice of a rate order—Colorado River storage project.

SUMMARY: Notice is given of Rate Order No. WAPA-4 of the Assistant Secreary for Resource Applications placing increased power rates into effect on an interim basis for Colorado River Storage Project (CRSP) power marketed by the Western Area Power Administration (Western).

The rate adjustment would increase average annual revenues about $8.3 million to meet cost recovery criteria.

The proposed wholesale firm-power rate consists of a capacity charge of $1.655 per kW-month and an energy charge of 4.0 mills per kWh. At 58.2-percent load factor, the composite rate is 7.89 mills per kWh, a 20.5-percent increase over the existing rate.

This rate order also contains statement and discussions of the principal factors leading to the decisions on the rate increase, and responses to the comments, criticisms, and alternatives offered during the rate increase proceedings.

EFFECTIVE DATE: The rate adjustments and new rates would be effective the first day of the first full billing period beginning on or after January 23, 1981.

FOR FURTHER INFORMATION CONTACT:

Mr. A. M. Gabiola, Area Manager, Salt Lake City Area Office, Western Area Power Administration, Department of Energy, P.O. Box 11606, Salt Lake City, UT 84147, (801) 524-5493

Mr. Conrad Miller, Chief, Rates and Statistics Branch, Western Area Power Administration, Department of Energy, P.O. Box 3402, Golden, CO 80401, (303) 231-1535

Marlene A. Moody, Office of Power Marketing Coordination, Department of Energy, Mail Station 3344, Federal Building, 12th and Pennsylvania Avenue, NW., Washington, DC 20461, (202) 633-8338.

SUPPLEMENTARY INFORMATION: By Delegation Order No. 0204-33, effective January 1, 1979 (43 FR 60636, December 28, 1978), the Secretary of Energy delegated to the Assistant Secretary for Resource Applications the authority to develop power and transmission rates, acting by and through the Administrator, and to confirm, approve, and place in effect such rates on an interim basis.

Rate adjustments on the CRSP are being conducted consistent with procedural rules applicable to Western. Final procedures for public participation in general adjustments were published in the Federal Register on March 23, 1978 (43 FR 12076), April 5, 1978 (43 FR 14359), and February 7, 1979 (44 FR 7796).

Proceedings on the proposed rate were initiated in April 1979, with an announcement published in the Federal Register at 44 FR 19533 (April 3, 1979) stating that a 38-percent power rate increase for the CRSP was proposed beginning with an estimated date of January 1, 1980. This announcement was subsequently amended by Federal Register notices 44 FR 24154 (April 24, 1979) and 44 FR 30759 (May 29, 1979) to add references to Public Utility Regulatory Policies Act standards and written comments.

After consideration of comments received, Western prepared a new power repayment study in August 1979 incorporating reductions in some estimated future costs and delays in some other estimated future costs, and correcting the misinterpretation of one of the provisions of Pub. L. 84-485. After proper notification to customers and to others by letter, press releases, and by an August 24, 1979, Federal Register notice (44 FR 49785), a public information forum was held on September 5, 1979, at which a revised proposed power rate increase of 23.8 percent was announced, in lieu of the 38-percent increase announced on April 3, 1979.

Subsequent to the September 5, 1979, forum, Western discovered that the price levels for all CRSP participating projects were at the January 1976 price level except for the Animas-La Plata, San Miguel, and West Divide Projects which were at the October 1967 price level. The costs of the three aforementioned projects were indexed to the January 1976 price level and the fiscal year 1977 CRSP power repayment study was revised to include the revised costs. This revision resulted in a rate increase of 25.8 percent (2 percent higher than the 23.8 percent advocated in the September 5, 1979, forum). The customers were given proper notification of the aforementioned revision by letter and by a February 15, 1980, Federal Register notice (45 FR 10399), and comments were received until March 17, 1980.

Customer comments were again considered in preparing the proposed rate order which was issued on August 1, 1980, by the Assistant Secretary for Resource Applications and published in the Federal Register (45 FR 52900) on August 8, 1980. There was a request by a customer to make an oral presentation before the Assistant Secretary, and a public comment forum was scheduled to be held on September 11, 1980, in Salt Lake City, Utah, and was announced in the Federal Register on August 21, 1980 (45 FR 55808). A notice of an extension until September 19, 1980, of the time that written comments could be submitted (extended from the September 8 date initially given) was published in the Federal Register on September 3, 1980 (45 FR 58407). The forum was held as scheduled.

Comments received have been considered during preparation of the November 1980 revision of the power repayment study and of this rate order.

Therefore, Rate Order No. WAPA-4 confirming and approving increased power rates on an interim basis is hereby issued, and the rates will be promptly submitted to the Federal Energy Regulatory Commission for confirmation and approval on a final basis.

Issued in Washington, D.C., December 23, 1980.

Ruth M. Davis,

Assistant Secretary for Resource Applications.

United States of America, Department of Energy, Assistant Secretary for Resource Applications

In the Matter of: Western Area Power Administration—Colorado River Storage Project Power Rates, Rate Order No. WAPA-4; Order Confirming, Approving, and Placing Increased Power Rates in Effect on an Interim Basis

December 23, 1980.

Pursuant to section 302(a) of the Department of Energy (DOE) Organization Act, 42 U.S.C. 7152(a), the power marketing functions of the Secretary of the Interior under the Reclamation Act of 1902, 43 U.S.C. 372 *et seq.*, as amended and supplemented by subsequent enactments, particularly by section 9(c) of the Reclamation Act of 1939, 43 U.S.C. 485h(c), and acts specifically applicable to the Colorado River Storage Project (CRSP), for the Water and Power Resources Service (Service) (formerly the Bureau of Reclamation), were transferred to and vested in the Secretary of Energy. By Delegation Order No. 0204-33, effective January 1, 1979, 43 FR 60636 (December 28, 1978), the Secretary of Energy delegated to the Assistant Secretary for Resource Applications the authority to develop power and transmission rates, acting by and through the Administrator,

and to confirm, approve, and place in effect such rates on an interim basis, and delegated to the Federal Energy Regulatory Commission (FERC) the authority to confirm and approve on a final basis or to disapprove rates developed by the Assistant Secretary under the delegation. This rate order is issued pursuant to the delegation to the Assistant Secretary and the rate adjustment procedures at 43 FR 12076 (March 23, 1978), as amended by 44 FR 77967 (February 7, 1979). The major topics included in the rate order are listed below.

Background

Existing Rates
Public Notice and Comments
Project History

Discussion

Power Repayment Studies

General
The August 1978 Study
August 1979 Changes from August 1978 Study
Future Wheeling Expense
Application of Central Utah Project (CUP) and Seedskadee Power Revenues
Unidentified Future Transmission Investments
Summary of August 1979 Changes
February 1980 Changes from August 1979 Study
Costs for the Animas-LaPlata, San Miguel, and West Divide Projects
November 1980 Changes from February 1980 Study
Deletion of Unidentified Future Transmission Investments

Repayment Issues

Inclusion of Future Projects in Repayment Study
LaBarge Project
Seedskadee Project
Fruitland Mesa Project
Savery-Pot Hook Project
Tables
Effect of Elimination of Projects Discussed Above
Cost Evaluation Period
Federal Projects Use Repayment Basis to Set Revenue Levels
Benefits Versus Costs
Apportionment of Revenues
Energy Losses
Diversity Versus Capacity Losses
Depletions
Replacements
Power Revenue Assistance to Irrigation Projects
M&I Water Rates and Irrigators' Ability to Repay
Reserves
Extraordinary Expense
Present Status of CRSP Repayment
Repayment of Salinity Control Construction Costs
Uprating the Generators at Glen Canyon Powerplant
Revenues from Capacity Above Lower Quartile
Amortization of Parker-Davis Project Facilities
Increase in Investment Versus Increase in Required Irrigation Assistance

Rate Design Issues

Description of the Design of the Rates
Adjustment Provision for Purchased Energy Costs
Alternative Power Rates and Conservation
Charges for Wheeling over Parker-Davis Project System
Phased Rate Increases
Applicability of the Public Utility Regulatory Policies Act of 1978 (PURPA)

Other Considerations

Public Comment Procedures
National Environmental Policy Act (NEPA)
Leavitt Act
Price Stability
Availability of Information
Submission to the FERC

Order

Background

Existing Rates

The increased rates which are the subject of this order supersede the following existing CRSP rates:

	Effective date	Existing rate	Increased rate
Existing rate schedule UC-F2 for wholesale firm power	June 1, 1977		
Demand charge, $/kW-month		$1.34	$1.65
Energy charge, mills/kWh		3.4	4.0
Composite rate at 58.2-percent load factor in mills/kWh		6.55	7.63
Existing rate schedule UC-FP2 for peaking power	June 1, 1977		
Peaking capacity without energy in $/kW-month		1.24	1.65

This order does not change the rates for the sale of nonfirm power or for wheeling power over the CRSP transmission system.

Public Notice and Comments

Pub. L. 84-485 authorized the CRSP, including participating projects. This legislation requires that an annual report be made to Congress to show the status of the project including "* * * the progress of return and repayment thereon, and the estimated rate of progress, year by year, in accomplishing full repayment * * *." To comply with this legislation, a power repayment study is made annually and its results are included in the annual report to Congress.

The FY 1977 power repayment study which was made for the 21st Annual Report showed that the existing power rate would be sufficient to pay annual expenses, but would not repay the power investment cost and the assistance needed to accomplish repayment of the irrigation features within the allowable time frames. A power rate increase of 43 percent (at 58.2-percent load factor) was found to be necessary to provide the required revenue. The result of this power repayment study was announced at a customer meeting on March 5, 1978.

An updated power repayment study was completed in August 1978. This study included some adjustments (primarily wheeling costs) to the 21st Annual Report study and indicated that a 2.49 mill/kWh (38-percent) rate increase (at 58.2-percent load factor) would be necessary to provide the required revenue.

At the request of the Colorado River Energy Distributors Association (CREDA), meetings were held with CREDA representatives on December 19, 1978, January 19, 1979, and March 30, 1979. CREDA represents the majority of CRSP customers; however, all CRSP customers were formally invited to the CREDA metings. At the first meeting, copies of a draft of the proposed power rate brochure were distribued to those present. At the three meetings, questions were asked by CREDA representatives and written answers were distributed at the meetings or mailed subsequently.

Federal Register notice 44 FR 19533 (April 3, 1979) announced the proposed CRSP rate adjustment and the public information and comment forums for public participation. This notice was subsequently amended by Federal Register notices 44 FR 24154 (April 24, 1979) and 44 FR 30759 (May 29, 1979) to add references to the PURPA standards and references to written comments. A press release was issued on April 3, 1979, to announce the proposed rate adjustment and the forums. On April 5, 1979, letters were sent to customers and other interested parties to announce the proposed rate adjustment and the forums and to transmit copies of the CRSP brochure dated April 1979, entitled "Proposed Power Rate Adjustment." Public information forums were held on the proposed rate increase in Phoenix, Arizona; Salt Lake City, Utah; and Denver, Colorado, on April 24,

25, and 26, 1979, respectively. At those forums numerous customers and other interested persons were in attendance. Procedures were reviewed, a summary of the brochure was presented, and all questions asked were answered at the forums or in writing before June 1, 1979.

In accordance with notices previously given, as referred to above, and reminder notices given by May 10, 1979, letters to customers and the June 6, 1979, press release, a public comment forum was held in Salt Lake City, Utah, on June 26, 1979, with customers and other interested persons in attendance. Written comments were received until the close of the comment period on July 11, 1979.

Several of the customers' comments seemed to merit further consideration, and a revised repayment study was made in August 1979. By means of an August 22, 1979, letter to all customers, an August 24, 1979, Federal Register notice (44 FR 49785), and a press release dated August 24, 1979, announcement was made of another public forum to be held in Salt Lake City, Utah, on September 5, 1979. At this forum a revised proposed rate increase (1.56 mills/kWh or 23.8 percent) was announced and copies of the August 1979 revised repayment study, the overhead projections used at the forum, and a September 5, 1979, brochure entitled "Revised Proposed Power Rate Adjustment" were distributed. Further comments were received through October 5, 1979.

Subsequent to the September 5, 1979, public forum, the Western Area Power Administration (Western) discovered that, contrary to a statement in the April 1979 rate brochure, the investment costs for all except three participating projects were at the January 1976 level and the costs of the three (Animas-La Plata, San Miguel, and West Divide Projects) were at the October 1967 price level. A second revision of the repayment study, with the three projects' costs indexed to the January 1976 level was made in February 1980. This study showed a need for a 1.69 mill/kWh, or 25.8-percent, rate increase, 2 percent higher than the previously revised proposed rate. A brief report showing the details of the study was sent to all customers by letter on February 12, 1980, (February 15, 1980, for CRSP customers in the Boulder City area) and the second proposed revision was published in the February 15, 1980, Federal Register (45 FR 10399) and was announced in a press release dated February 15, 1980. Customers were given an opportunity to comment until March 17, 1980.

Customer comments were again considered in preparing the proposed rate order which was issued on August 1, 1980, by the Assistant Secretary for Resource Applications and published in the Federal Register (45 FR 52900) on August 8, 1980. There was a request by a customer to make an oral presentation before the Assistant Secretary.

Therefore, a public comment forum was scheduled to be held on September 1, 1980, in Salt Lake City, Utah, and was announced in the Federal Register on August 21, 1980, (45 FR 55808). A notice of an extension until September 19, 1980, of the time that written comments could be submitted (extended from the September 8 date initially given) was published in the Federal Register on September 3, 1980, (45 FR 58407). The forum was held as scheduled. Comments received have been considered during preparation of the November 1980 revision of the power repayment study and of this rate order.

Project History

On April 11, 1956, the CRSP and participating projects were authorized by Pub. L. 84–485. By means of the four storage units authorized, the flow of the Colorado River is regulated in such a way that irrigation, municipal, industrial, and other water use developments in the Upper Colorado River Basin can be made while still maintaining water flows into the lower basin as required by the Colorado River Compact. Facilities have also been provided at the storage units for flood control, for recreation, and for other beneficial purposes. In order to maximize the use of water and to obtain revenues to assist in the repayment of the irrigation developments, power generating plants have been installed at three of the four storage units. A power generating plant has been installed on one of the participating projects and generating plants will be included on other participating projects where such developments are found to be feasible.

The table below lists the existing powerplants, with their installed capacity and dates of initial service.

CRSP	Installed capacity MW	Inservice date
Glen Canyon	950	Sept. 1964
Flaming Gorge Powerplant	108	Nov. 1963
Curecanti Unit—Blue Mesa Powerplant	60	Sept. 1967
Curecanti Unit—Morrow Point Powerplant	120	Dec. 1970
Curecanti Unit—Crystal Powerplant	28	Aug. 1978
Subtotal	1,266	
Participating Projects:		
Seedskadee Project—Fontenelle Powerplant	10	May 1968
Grand Total	1,276	

Transmission facilities include a high-voltage transmission grid to deliver power to the established delivery points in the market area, to provide interconnections among the plants of the CRSP units and participating projects, and to interconnect with other existing Federal and utility systems withing the market area.

Discussion

Power Repayment Studies

General

The power repayment studies for the CRSP are prepared by Western with the cooperaton of the Service. Basic river basin hydrology, water depletions, power generation, and project development data are among the many items the Service contributes to the studies.

The power repayment studies are prepared in accordance with CRSP authorizing legislation and with DOE Order No. RA 6120.2 on Power Marketing Administration financial reporting, which basically adopted policy criteria originally established in the Department of the Interior's Manual, parts 730.3 and 730.4. The studies array historic income, expense, and investment to be repaid from power revenues, along with estimates for future years, and portray the annual repayument of power production and transmission costs of a power system, as well as nonpower costs assigned to power for repayment, through the application of revenues over the repayment period of the project. The studies show, among other items, estimated revenues and expenses year by year over the remainder of a project's repayment period, the estimated amount of Federal investment amortized during each year, and the total estimated amount of Federal investment remaining to be amortized. The studies do not deal with rate design.

The power repayment studies are also prepared in accordance with the Reclamation Project Act of 1939. As part of its marketing policy, Western stirves to transmit and dispose of CRSP power and energy in such a manner as to encourage the most widespread use thereof at the lowest possible rates consistent with sound business principles. With the rate increase which is the subject of this Order, the power

will be sold at the lowest possible rates in accordance with statutory mandate. Without the increase, the statutory requirements will not be met. Insofar as possible, the increase is in keeping with both sound business principles and statutory requirements.

The August 1978 Study

A repayment study made in August 1978 for fiscal year 1977 showed that the existing power rate is insufficient to pay within allowable time frames the costs assigned to the power function, mainly because of rapidly escalating construction and operating expenses. The study showed that in the time period between January 1974—the price level date for the present rate—and January 1977, the total costs to be paid by power increased by about $1,228 million. The August 1978 repayment study indicated that a power rate increase of about 38 percent (total cost of 9.04 mills/kWh and 58.2-percent load factor) would be needed to accomplish the repayment required by the project authorizing act.

The August 1979 Changes From August 1978 Study

The August 1978 power repayment study which resulted in the recommendation for a 2.49 mill/kWh (38 percent) rate increase was used in the April 1979 rate adjustment brochure entitled "Proposed Power Rate Adjustment." An analysis of customer comments and recommendations on this brochure resulted in Western adopting some of their recommendations. These changes are reflected in the August 1979 repayment study and are described in the September 5, 1979, brochure. The following is a discussion of the changes from the study in the April 1979 brochure:

Future Wheeling Expense

The repayment study in the April 1979 brochure included the estimated excalation of wheeling rates in future years. At the suggestion of the customers, Western reconsidered the matter and decided that the wheeling rates should not have been escalated. Elimination of the excalation reduced the future average annual wheeling cost for the 1978–2052 period from $4,347,000 to $3,071,000 and reduced the proposed power rate adjustment by 3.5 percent.

Application of Central Utah Project (CUP) and Seedskadee Power Revenues

The repayment study in the April 1979 brochure was based on deferring the application of CUP (Utah) and Seedskadee (Wyoming) power revenues to the repayment of the irrigation costs of participating projects in Utah and Wyoming until 50 years after the CUP and Seedskadee power inservice dates. The customers recommended that CUP and Seedskadee power revenues be applied to repayment of irrigation costs of Utah and Wyoming participating projects, respectively, as soon as the CUP and Seedskadee power costs are repaid. In comparing the early repayment studies with current studies, it was discovered that an unexplained change was made in 1973 and continued in subsequent years so that studies prepared from 1973 through 1976 have not been in compliance with the law on this point. Section 5(e) of P.L. 84–485 states that power revenues from a participating project should be applied to repayment of projects within the State and not be used to meet the requirements of participating projects in other States. Due to the express language in P.L. 84–485, Western adjusted the August 1979 repayment study to the original method, which retains CUP and Seedskadee power revenues to the credit of the States where the two projects are located. This reversion to the pre-1973 method of handling revenues from the participating projects reduced the proposed power rate adjustment by 7.3 percent.

Unidentified Future Transmission Investments

The repayment study in the April 1979 brochure included an estimated unidentified future transmission investment of about $71 million in the 1981–1984 period. The customers recommended that the $71 million be deleted. P.L. 84–485 authorized specific storage units, specific participating projects, and transmission facilities related to the foregoing, but did not specify any particular transmission facilities. In the 1958 repayment study and in all repayment studies since then, amounts have been included for unidentified transmission facilities. It was concluded that the historic policy, which was being followed by Western in the rate adjustment proposal, was a reasonable implementation of the law.

Western restudied the matter and decided that the $71 million of unidentified transmission facilities should be deferred from the 1981–1984 period to the 1990–2020 period, with approximately one-seventh of the cost being placed in service every 5 years. The effect of this change was to reduce the proposed power rate adjustment by about 3.4 percent.

Summary of August 1979 Changes

A summary of the changes made in the August 1979 study as compared to the August 1978 study is tabulated below

Item	Decrease in proposed rate adjustment (pct)
Eliminate escalation of future wheeling expense	3.5
Apply CUP and Seedskadee power revenues to Utah and Wyoming as in repayment studies prior to 1973	7.3
Defer unidentified future transmission investments from 1981–1984 period until 1990–2020 period	3.4
Total decrease	14.2

The result of the above was to increase the existing rate by 1.56 mills/kWh (23.8 percent) instead of by the 2.49 mills/kWh (38 percent) stated in the April 1979 brochure.

February 1980 Changes From the August 1979 Study

Costs for the Animas-LaPlata, San Miguel, and West Divide Projects

Subsequent to the September 5, 1979, forum, Western discovered that, contrary to a statement in the April 1979 rate brochure indicating that all costs were at 1977 price levels, the investment costs of all except three of the participating projects were at 1976 price levels. The costs of the three projects (Animas-LaPlata, San Miguel, and West Divide) were at 1967 price levels.

The investment costs of these three projects were indexed to January 1976 price levels and another revised repayment study was run in February 1980. This second revision showed that an overall rate increase of 1.69 mills/kWh (from 6.55 mills/kWh to 8.24 mills/kWh) or 25.8 percent was needed, 2 percent higher than the previously revised proposed rate.

November 1980 Changes From February 1980 Study

Deletion of Unidentified Future Transmission Investments

During a September 11, 1980, public hearing concerning the then proposed rate order, commenters asserted that Department of Energy Order RA 6120.2, which was adapted from 730 DM 4 of the Department of the Interior Manual, limits the period of time during which future estimates of power system costs may be modified to reflect changing conditions, such as transmission additions, to a cost evaluation period which is normally 5 years. Deferring the unidentified transmission facilities to the 1990–2020 period placed them outside the normal cost evaluation period. Consideration was given to the

possibility of moving the unidentified transmission facilities back into the 1981–1984 period and, based on developments since the FY 1977 studies were initially prepared, identifying them. However, such use of later developments would open the studies to a multitude of other developments and prolong the rate adjustment efforts.

As analyzed in more detail in a later section of this rate order, Order No. RA 6120.2 allows for exceptions "specifically approved by the Secretary" or "authorized by statute." The inclusion of unidentified transmission during the 1990–2020 period was one of these exceptions. However, since it is the practice of the Secretary to market power at the lowest possible rates consistent with sound business practices, weight was given to the policy underlying the 5-year cost evaluation period in this instance. A decision was made to delete the unidentified transmission facilities. Transmission facilitieswill be identified in the next repayment study, however, and will be considered in the evaluation of project costs and revenues in the future. The effect of this deletion is to reduce the rate by 5.3 percent, to a 20.5 percent (1.34 mills/kWh) increase.

Repayment Issues

Other public comments were received which were critical of a number of assumptions made in the repayment study. The areas of comment are discussed below.

Inclusion of Future Projects in Repayment Study

The primary thrust of a number of the public comments relating to the repayment study revolved around whether or not all participating projects which have been authorized by Congress should be included in the repayment study. This concern has apparently emerged due to the amount of time which has elapsed between authorization and construction.

Several customers suggested that the proposed rate increase be based on a repayment study which excludes the costs of participating projects not yet in service or nearing completion, and that future or "stepped" rate increases be made as the projects reach or approach the inservice dates. It is clear, however, from the provisions of the Act, the legislative history of Pub. L. 84–485 which established CRSP, and from the first repayment study—which provides a contemporaneous interpretation and guide for repayment procedures—that it was the intent of Congress that current rates be based on the inclusion of all authorized participating projects in CRSP repayment studies. The Western Area Power Administration's Office of the General Counsel has issued a legal memorandum supportive of the present ratemaking methodology. The inclusion of all authorized participating projects is legislatively and administratively proper.

The appropriateness, within legal restraints, of including each of the participating projects has been considered. Only one authorized participating project has ever been deauthorized. The Pine River Extension was authorized by Congress on April 11, 1956, by Pub. L. 84–485, and was deauthorized by Congress on September 30, 1968, by Pub. L. 90–537. No costs have been included for the Pine River Extension.

The status of four other participating projects, although still authorized, is subject to question. The entire LaBarge Project and the irrigation development on the Seedskadee Project have both been declared by the Bureau of Reclamation to be indefinitely deferred and Congress has been so informed. Costs included for these two projects are limited to sunk costs based on their indefinitely deferred status. More recently, President Carter has recommended deauthorization of the Fruitland Mesa and Savery-Pot Hook Projects; however, no legislative action has been taken to deauthorize either of the projects and, although no funds have been expended on them since the President's recommendation, they have not been declared to be indefinitely deferred. Except for the delay, their status remains as it was before the President's recommendation, and their costs have accordingly been included. A more complete summary of the status of these four projects is given below.

LaBarge Project

The project was authorized by the Congress on April 11, 1956, by Pub. L. 84–485. On February 2, 1961, the Regional Director, U.S. Bureau of Reclamation, Salt Lake City, Utah, wrote the Commissioner of the Bureau of Reclamation recommending that construction not be undertaken. The Commissioner concurred by letter of February 27, 1961, in the recommendation ". . . that construction of the project not be undertaken at this time. . . ." In the CRSP 9th Annual Report to Congress for FY 1965, the Bureau of Reclamation stated that construction had been deferred indefinitely, as suggested in the Senate Subcommittee Appropriation Hearings for FY 1962, page 216. Tables of repayment data for the LaBarge Project follow the discussion of the Savery-Pot Hook Project.

Seedskadee Project

The project was authorized by Congress on April 11, 1956, by Pub. L. 84–485. Congressional hearings on the Riverton and Eden Projects in 1962 brought to light that serious financial and economic problems were encountered by farmers on these high-altitude irrigation projects. As a result of these hearings, the Commissioner of the Bureau of Reclamation issued a stop order on May 21, 1962, suspending construction of irrigation features of the Seedskadee Project until a review of Wyoming reclamation projects could be accomplished. The Secretary of the Interior on August 10, 1962, appointed the Wyoming Reclamation Projects Survey Team to analyze problems on Wyoming projects and recommend possible solutions. One of the recommendations made by the survey team was that a development farm be established on the Seedskadee Project. Data collected from the operation of the development farm resulted in the conclusion that only 34,000 acres of the original 58,000 acres were suitable for irrigation, that even the 34,000 acres would be marginally feasible, and that the developed project water supplies should be made available for municipal and industrial (M&I) and other purposes. As a result of the investigations, and because of the desire of the State of Wyoming to purchase Seedskadee water for M&I purposes, the United States sold the State all the storage space in the Fontenelle Reservoir excluding the last 65,000 acre-feet. The State was given the first right of refusal to the last 65,000 acre-feet upon notice of its availability for M&I purposes. All the foregoing is documented in the October 8, 1973, letter from the Assistant Secretary of the Interior to the President, with copies to the President of the Senate, to the Speaker of the House, and to the Chairman of the Senate and House Committees on Interior and Insular Affairs.

In December 1974, the Bureau of Reclamation in Salt Lake City, Utah, prepared a cost allocation report on the Seedskadee Project. After review by various offices of the Bureau of Reclamation and by the Wyoming reclamation representative, the report was submitted to the Commissioner of the Bureau of Reclamation for use in a report to the Congress as required by section 6 of P.L. 84–485. The report stated that "Irrigation development has been indefinitely deferred...." and established revised repayment schedules. Tables of repayment data for

the Seedskadee Project follow the discussion for the Savery-Pot Hook Project.

Fruitland Mesa Project

The project was authorized on September 2, 1964, by P.L. 88–568. The Definite Plan Report was approved October 9, 1967, and a repayment contract with Fruitland Mesa Water Conservancy District (District) was validated September 29, 1969. As a result of new water supply studies and changes in plan formulation, the Definite Plan Report and contract with the District were in the process of revision in early 1977. On April 18, 1977, the President recommended deauthorization of the project. No action has been taken to deauthorize the project and the project has not been declared to be indefinitely deferred, although no funds have been expended on the project since that time. Tables of repayment data for the Fruitland Mesa Project follow the discussion of the Savery-Pot Hoop Project.

Savery-Pot Hook Project

The project was authorized on September 2, 1964, by P.L. 88–568. The Definite Plan Report was approved December 2, 1971. As a result of changes in plan formulation, the Definite Plan Report was in the process of revisions in early 1977. Repayment contracts with the Pot Hook and Little Snake Water Conservancy Districts were also being negotiated in early 1977. On April 18, 1977, the President recommended deauthorization of the project. No action has been taken to deauthorize the project and the project has not been declared to be indefinitely deferred, although no funds have been expended on the project since that time. Tables of repayment data for the LaBarge, Seedskadee, Fruitland Mesa, and Savery-Pot Hook Projects follow.

Tables

LaBarge Project

1964 Data Before Deferment

Irrigation repaid by:	
Irrigators	250,000
Apportionment (power)	1,501,000
Others	0
Municipal and Industrial	0
Power	0
Nonreimbursable	65,000
Total	1,816,000

1965 Data After Deferment

Irrigation repaid by:	
Irrigators	0
Apportionment (power)	136,000
Others	0
Municipal and Industrial	0
Power	0
Nonreimbursable	86,000
Total	222,000

1977 Repayment Study

Irrigation repaid by:	
Irrigators	0

Tables—Continued

Apportionment (power)	136,000
Others	0
Municipal and Industrial	0
Power	0
Nonreimbursable	86,000
Total	222,000

Seedskadee Project

1964 Data Before Deferment

Irrigation repaid by:	
Irrigators	7,300,000
Apportionment (power)	39,672,000
Others	492,000
Municipal and Industrial	908,000
Power	3,574,000
Nonreimbursable	7,724,000
Total	59,690,000

1965 Data After Deferment

Irrigation repaid by:	
Irrigators	0
Apportionment (power)	1,428,000
Others	411,000
Municipal and Industrial	12,310,000
Power	3,574,000
Nonreimbursable	16,586,000
Total	34,309,000

1977 Repayment Study

Irrigation repaid by:	
Irrigators	0
Apportionment (power)	1,228,000
Others	411,000
Municipal and Industrial	12,310,000
Power	3,574,000
Nonreimbursable	16,984,000
Total	34,507,000

Fruitland Mesa Project

1977 Repayment Study

Irrigation repaid by:	
Irrigators	3,790,000
Power	80,256,000
Others	181,000
Municipal and Industrial	0
Power	0
Nonreimbursable	4,373,000
Total	89,600,000

1978 22nd Annual Report

Irrigation repaid by:	
Irrigators	3,790,000
Power	80,256,000
Others	181,000
Municipal and Industrial	0
Power	0
Nonreimbursable	4,163,000
Total	88,390,000

Savery-Pot Hook Project

1977 Repayment Study

Irrigation repaid by:	
Irrigators	5,086,000
Power	66,630,000
Others	869,000
Municipal and Industrial	0
Power	0
Nonreimbursable	2,315,000
Total	74,900,000

1978 22nd Annual Report

Irrigation repaid by:	
Irrigators	5,086,000
Power	66,630,000
Others	869,000
Municipal and Industrial	0
Power	0
Nonreimbursable	2,340,000
Total	74,925,000

The total cost of all the participating projects is nearly $2,553 million, and the amount to be repaid from power revenues is nearly $1,090 million.

Effect of Elimination of Projects Discussed Above

As discussed later in this order, section 5(e) of P.L. 84–485 requires the apportionment of certain revenues among the four Upper Colorado River Basin States of Colorado, New Mexico, Utah, and Wyoming. The requirements of projects in one of the four States will determine the total revenue needed for apportionment. For the studies on which this rate increase is based, the controlling State which determines the total revenue needed for apportionment is Colorado. Since some of the projects discussed above are in Colorado, their elimination would reduce the total revenue required. However, the elimination of projects in Colorado would result in Utah becoming the controlling State which determines the total revenue for apportionment, and would result in a reduction of only 2 percent in the amount of increase needed. For reasons already discussed, the projects have not been eliminated.

Cost Evaluation Period

A number of customers raised the issue of whether 730 DM 4 of the Department of the Interior Departmental Manual (now also Department of Energy Order No. RA 6120.2) should not limit the analysis of future irrigation costs associated with CRSP to a maximum of about 5 years. Order No. RA 6120.2 does not conflict with the current CRSP ratemaking methodology for a number of reasons. The order provides, in the first paragraph, for exceptions "specifically approved by the Secretary" or "authorized by statute." The CRSP Act sanctions the departure from the 5-year limitation, as does the longstanding interpretation of the administrative agencies charged with the sale of CRSP power. Even if the "authorized by statute" exception did nor exist, the execution of this rate order demonstrates, as a matter of administrative policy, the approval of the current CRSP ratemaking methodology. This policy decision is based upon the Reclamation policy of irrigation assistance, past administrative practice, and the comprehensive purpose of the CRSP as a whole. Furthermore, the provisions in Order No. RA 6120.2 relating to a cost evaluation period apply only to power facilities. This is indicated by the second sentence of paragraph 10(k) which specifically refers to power facilities. The subject of future irrigation investment is not covered and therefore a determination with respect to these future investments must be made on a project-by-project basis.

Federal Projects Use Repayment Basis to Set Revenue Levels

Further comments raised the issue of whether the Federal Energy Regulatory Commission restrictions on the inclusion of the costs of future facilities in ratesetting for private utilities would restrict FERC approval of the CRSP rates.

Generally, the FERC does not allow the inclusion of construction work in progress (future facilities) in setting current rates. As one of the commenters stated, "The basis of the Commission's decisions along these lines is that a utility's plant facilities should not be paid for by the utility's ratepayer through the utility's rates until such facilities become 'used and useful' to the ratepayer." The CRSP is not an electric utility as defined in the Federal Power Act, but rather is a reclamation water project to which hydroelectric generation has been added to assist in paying for certain of the water features. Irrigation projects and salinity control are not "used and useful" to power customers per se. It is essential that costs of such features to be paid by power should be spread as evenly as possible over all power users for the entire life of the project, while at the same time being sure that all investments are repaid by the end of their respective repayment periods.

Further, Federal power rates are required by law to be established on a repayment basis. The repayment studies that set revenue level requirements show that annual operating costs will be recovered in the year in which they are incurred and that all investments will be amortized within a reasonable period of years, which has been determined to be 50 years in most cases. This analysis includes future revenues and costs—in this case to the year 2052—as well as historical revenues and costs. The methodology differs substantially from the ratesetting approach based on cost-of-service studies incorporating depreciation as used in the private utility sector.

Benefits Versus Costs

Some customers questioned whether the benefits of unbuilt projects would exceed the costs and/or outweigh the environmental consequences.

At one time, all authorized unbuilt projects had benefit-cost analyses indicating that the benefits exceeded the costs. Shortly before construction begins, new benefit-cost analyses and environmental impact statements will be made, based on the final plan adopted. It is not possible at this time to accurately predict what the final results will be.

Apportionment of Revenues

In the repayment studies, revenues in the Upper Colorado River Basin (Basin) fund for irrigation assistance to authorized participating projects are apportioned to the States by the percentages specified in section 5(e) of P.L. 84–485. This results in a credit to some States in excess of that required for currently authorized participating projects.

Power customers refer to this excess as "surplus surplus" and, to prevent it, advocate application of the revenues to repayment of each participating project feature as the feature repayment comes due. The power customers and Western made repayment studies based on the originally proposed rate adjustment, which show that the method advocated by the customers would have reduced the 38-percent rate adjustment to about 19.8 percent. Western made a similar study using the 25.8-percent increase as a base, and it showed that the method advocated by the customers would reduce the rate adjustment from 25.8 percent to about 15.1 percent.

It is clear that this "surplus surplus" will accrue in the future because P.L. 84–485 requires that certain revenues in the Basin fund are to be apportioned among the States for repayment of the participating projects.

The law prohibits the use of revenues apportioned to any State from being used in any other State without the consent of the legally constituted authority of the State to which they are apportioned.

Western met with the governors of the four Upper Basin States to inform them of the need for the rate adjustment and the appropriate provisions of the law. Subsequently, on October 2, 1979, the governors of the affected States adopted the recommendation of the September 17, 1979, resolution passed by the Upper Colorado River Commission that they ". . . support the position that the proposed power rate adjustment for the marketing of Colorado River Storage Project power be established in accordance with the requirements of Public Law 84–485, as amended, to achieve the purposes of the Act. . . ." While the adoption of this resolution does not rule out the possibility of a State with surpluses allowing those surpluses to be used in another State, it does preclude the use of such a possibility in the present rate adjustment.

Energy Losses

Several customers questioned using energy losses of 7 percent of the energy delivered at designated delivery points and suggested that it should be about 3 to 5 percent instead. CRSP's average percent loss of energy delivered to designated delivery points from 1972 through 1978 (excluding the drought year of 1977) is 7.38 percent; therefore, the 7 percent as used in the rate study seems reasonable.

Diversity Versus Capacity Losses

Some customers suggested that diversity may exceed capacity losses and that this should be analyzed. Western looked at the 1972–1978 period (excluding the 1977 drought year) and found that, in some of the years, the diversity exceeded losses and in other years, the diversity was less than losses. On the average for the 6-year period, the diversity exceeded the losses by 22 MW in the summer and 2 MW in the winter. With the exclusion of the summer of 1976 during which there was an extraordinarily high diversity (in addition to excluding the 1977 drought year), the diversity varied between 35 MW higher and 30 MW lower than losses. On the average, the diversity exceeded the losses by 8 MW in the summer and 2 MW in the winter. In view of the foregoing, it appears that the assumption of diversity equaling capacity losses is reasonable.

Depletions

Some customers suggested that the water depletions used in the power repayment study are too high because they include depletions for future participating projects and also for unidentified developments.

The customers also commented that all possible M&I revenues from the sale of water (i.e., depletions for M&I use) are not included, and that, if included, the required power rate would decrease.

As stated elsewhere in this order, P.L. 84–485 requires that the study must include all authorized water developments which are components of the CRSP. The water depletion schedule has been developed by the Water and Power Resources Service, and incorporates the reasonable assumption that the pressures of a growing population will eventually result in water developments utilizing each State's entitlement of the flow of the Colorado River. These developments may not necessarily be Federal projects, but anticipated water demands indicate that the water will be used. The Water and Power Resources Service's schedule appears to be a reasonable basis to use

for the power repayment study, recognizing that any prediction about the future is speculative at best. In any event, subsequent power repayment studies will reflect updated depletion schedules based on the more current information.

Because of uncertainties about the outcome of the President's recommendation to deauthorize the Fruitland Mesa and Savery-Pot Hook Projects, depletions for those two projects were omitted from the FY 1977 hydrological study, which later was used as the basis for the CRSP power repayment study. These projects should not have been deleted because, as explained elsewhere in this order, they have neither been deauthorized nor declared to be indefinitely deferred. However, the depletions used in the hydrology study included unidentified depletions which, except for the one year 1990, exceeded the magnitude of the depletions for the Fruitland Mesa and Savery-Pot Hook Projects. Therefore, there would have been no change in the power rate even if depletions for the Fruitland Mesa and Savery-Pot Hook Projects has been identified in the study.

M&I revenues from storage units in excess of costs allocated to M&I are apportioned to the States for irrigation assistance. However, M&I water users of participating projects pay only their allocated costs and do not assist in the repayment of the irrigation allocation; therefore, future depletions caused by M&I water use will not result in extra revenue to reduce the power rate.

Replacements

The customers suggested that, since replacement factors used in the rate study were developed in 1969, replacement cost estimates should be reevaluated. It is true that the factors for replacements were developed in 1969. However, these factors were based on the historical service lives of the equipment; and while updated experience may modify some of the service lives, it is unlikely that there would be a significant change. Western and the Service are currently in the process of updating the replacement factors, and any revisions will be reflected, when available, in future power repayment studies.

Power Revenue Assistance to Irrigation Projects

Some customers questioned why CRSP power revenues are used to provide assistance for irrigation projects, whereas Parker-Davis and Boulder Canyon Project power revenues are not.

Pursuant to enabling legislation, CRSP power revenues must provide assistance for irrigation projects, whereas enabling legislation for Parker-Davis and Boulder Canyon Projects does not provide for such assistance. The power rates proposed for each project must be adequate to effect repayment as contemplated by its authorizing legislation. Such legislation does not always allow uniformity among the projects as to what costs must be paid from power revenues and in methods for determining power rates. While power revenues from the Parket-Davis Project are not used for irrigation assistance, they are used to repay investment in noninterest-bearing electrical facilities used to support irrigation on several projects, as well as to repay certain costs associated with the Mexican Water Treaty. Revenues from the Boulder Canyon Project are not used to repay costs of irrigation projects. Repayment on both projects is in accordance with authorizing legislation, and Western has made no changes in either study.

M&I Water Rates and Irrigators' Ability to Repay

Some customers suggested that M&I rates should be raised when power rates are increased and that the irrigators' calculated ability and obligation to repay should also be revised at the same time. The M&I rate for water from mainstem CRSP reservoirs was set by Service policy to recover construction costs allocated to M&I water plus contingencies and operation and maintenance (O&M). The rates are fixed for the term of the contracts. Upon the expiration of these contracts, the need for changing the rates will be explored. The M&I rates for water from participating projects are set to repay the costs allocated to M&I plus O&M. All contracts for irrigation water on participating projects require the water users to repay a fixed amount of investment plus operation, maintenance, and replacements (OM&R). The irrigators and participating projects's M&I water users automatically pay any increased costs of OM&R.

Reserves

One of the customers suggested that the amount assumed for reserves is too high. The reserve assumed for the repayment study was 10 percent of the load, a percent factor that has been used in previous repayment and other studies. The Western Systems Coordinating Council (WSCC) power supply design criteria recommend that reserve capacity should meet or exceed the sum of the capacity associated with the two largest risks or the largest risk plus 5 percent of load. A comparison between the reserves, as used in the CRSP rate study and the WSCC standard for the year 1990, is as follows:

Rate study reserves	144 MW
WSCC standard	216 MW

From this comparison, it appears that the reserves as used in the repayment study are not too high.

Extraordinary O&M Expenses

One customer suggested that the extraordinary O&M expenses for FY 1979 in the power repayment study should be amortized over a reasonable period of years rather than being completely paid for in the year in which they occur. The extraordinary O&M expenses of $800,000 are for spillway tunnel repairs at Flaming Gorge and for road construction at Glen Canyon.

Without any rate increase, revenues are available in 1979 to pay the extraordinary O&M expenses in that year. If the revenues are not applied to the extraordinary O&M expenses, they would be applied toward repayment of other investments bearing the same interest rate (2.875 percent) as would be applicable to the unpaid extraordinary O&M expenses. The $800,000 expense could be treated either way with no effect on the rate increase.

Present Status of CRSP Repayment

Some customers stated that the CRSP is $87 million ahead of its required repayment of Federal investment. However, the $87 million is the total amount through FY 1977 that has been applied to repayment of storage units' investment costs which are allocated to power. CRSP generally has 50 years in which to repay each investment, but cannot wait until the last year for each investment and then repay the whole thing. This would cause sudden and severe changes of rates. Instead, CRSP spreads the repayment over the 50 years (paying highest interest-bearing investments first to the extent possible) in such a way as to maintain as level (and low) rates as possible. Based on CRSP repayment criteria and the power reapayment study, repayment of Federal investment is behind instead of ahead of schedule.

Repayment of Salinity Control Construction Costs

Some customers recommended that, instead of assuming in the study that the interest-free salinity control construction costs would be repaid in 50 equal annual installments, the study should have been based on deferring such repayment until interest-bearing

costs are repaid. This would eliminate about $3 million in interest payments.

Pub. L. 93-320 provides that, among other things, the portion of the salinity control costs allocated to the Basin will be paid by CRSP power revenues, and furthermore that " * * * the Secretary is authorized to make upward adjustments in rates * * * as soon as practicable and to the extent necessary to cover the costs of construction, operation, maintenance, and replacement of units * * * Provided, That revenues derived form said rate adjustments shall be available solely for the construction, operation, maintenance, and replacement of salinity control units in the Colorado River Basin. * * * "

In early 1976, the then Bureau of Reclamation sought advice from the Regional Solicitor of the Department of the Interior on this matter. By a memorandum dated April 13, 1976, the Solicitor advised the Regional Director that in view of the provisions of Pub. L. 93-320 quoted above, the repayment of salinity control construction costs could not legally be delayed until after noninterest-bearing costs are repaid. Therefore, CRSP repayment studies made since 1976 have included repayment of salinity control construction costs in 50 equal annual installments.

Uprating the Generators at Glen Canyon Powerplant

Some customers suggested that the additional capacity at Glen Canyon Powerplant due to uprating the generators should have been included in the February 1980 repayment study and that, based on data from power repayment studies for the CRSP 23rd Annual Report (after FY 1979), the sale of such added capacity would have increased the revenues by more than twice those needed to counteract the increased costs of the three participating projects added in the February 1980 revised repayment study.

The power repayment studies for the proposed rate increase have for the most part been based upon conditions that existed as of the end of FY 1977, when the CRSP 21st Annual Report was prepared. At that time, maintenance funds were budgeted for future replacement of Glen Canyon generator stator windings and rotor pole piece collars becaue of normal wear and tear. However, the Service had not investigated the matter fully enough to determine whether or not the units could be uprated. Commenters pointed out that the 21st Annual Report contains this statement: "an award was made April 14, 1977, for stator windings on two existing generators at the Glen Canyon Powerplant. Work was initiated on September 28, 1977, on Unit 7. The new windings will increase the generator capacity of each unit by 25 megawatts." Western has been unable to locate either the source or the basis for the stated 25 megawatt increase for each unit. The power repayment study included in the 21st Annual Report does not include the claimed additional capacity.

When the studies for the CRSP 23rd Annual Report were made, the Service had made further investigations and operational tests, and felt that with some additional modifications it was reasonable to assume the uprating could be realized. Therefore, the repayment study for the 23rd Annual Report included increased sales due to uprating. It should be noted that, taking the planned uprating into account as well as other changes between 1977 and 1979, the 23rd Annual Report shows the need for a rate increase greater than the 20.5 percent promulgatged by this order.

Revenues from Capacity Above Lower Quartile

Revenue form future capacity sales used in the power repayment study is based on capacity available under lower quartile water conditions. It was suggested that capacity during years when water conditions exceed the lower quartile could be sold and that the effect of this should be included in the rate determination.

Power repayment studies prior to the FY 1976 studies included capacity revenues only from the long-term dependable capacity (capacity available during the most adverse water year). However, in recognition of the fact that capacity above that available under adverse water conditions is almost always available, and is usually sold, the present study is based on sales of capacity under lower quartile water conditions. Consideration was given to using capcity available under average water conditions based on the theory that half the time there would be more capacity available, and half the time there would be less capacity available, and that all the capacity available would be sold. A comparison of the historical capacity offered for sale with the amount sold indicates that there has generally been a market for the excess capacity. However, in order to achieve capacity revenues which over the long-term average the same as capacity sales under average water conditions, all the capacity available would have to be sold every month. To assume that this could be done would be imprudent— there are too many possible conditions which might prevent this from happening, such as the inability to locate a purchaser because of market conditions, or because of the inability of the power system to produce and deliver power due to maintenance of powerplants and/or transmission facilities. The use of lower quartile capacity is therefore both reasonable and prudent.

Historically, all revenues from capacity sales are included in the study.

Amortization of Parker-Davis Project Facilities

Some customers suggested that the construction costs of the portion of the Parker-Davis Project facilities paid for by CRSP revenues be repaid in the same manner as the construction costs of CRSP facilities, instead of the CRSP paying Parker-Davis Project a uniform annual amortization amount.

By Contract No. 14-06-304-1548 between the then Regions 3 and 4 of the Bureau of Reclamation (now Water and Power Resources Service), agreement was made that the CRSP would pay the Parker-Davis Project for construction repayments in equal annual amortization amounts based on 3-percent interest and a 30-year repayment period. The contract has been transferred to Western, and the contract provisions are used to develop the payment used in the CRSP repayment study. Since the 3-percent interest is higher than the interest rates of CRSP facilities, except central Utah, application of the general rules for CRSP repayment; i.e., repay highest interest-bearing costs first, would probably show a small reduction in the magnitude of the CRSP power rate increase needed. However, the change would be very minor, since the total construction cost involved is less the $3 million and the 3-percent interest rate is only slightly higher than the 2⅞-percent interest rate of the major portion of CRSP investments.

Increase in Investment Versus Increase in Required Irrigation Assistance

One group of customers pointed out that, in the February 1980 power repayment study, the investment costs of the Animas-La Plata, San Miguel, and West Divide participating projects increased by only 61 percent, whereas the required irrigation assistance to the aforementioned projects from power and M&I revenues increased by 80 percent. The customers claimed that the disproportionate increae of irrigation assistance as compared to investment is improper.

The reason why the required irrigation assistance increased by a greater percentage than did the investment

costs is that the revised costs shown in the repayment study are based partly on cost indexing and partly on revised plan formulations for the participating projects. The irrigators' ability to repay did not increase in proportion to the cost increases. Thus, these changes result in the irrigation assistance being increased accordingly.

Rate Design Issues

Description of the Design of the Rates

Much of the CRSP cost paid by power revenues, such as aid to irrigation, is not normally considered to be a cost of service in the usual sense. The CRSP power is sold at the rate required to pay operating costs and to recover the costs specified in Pub. L. 84–485 and in Pub. L. 93–320. The rate schedule also has a provision that unauthorized overruns shall be billed at 10 times the base rate. Although this provision is intended as an incentive for the customer to find supplemental power suppliers, it may encourage energy conservation to some minor extent.

The CRSP firm-power rate includes a capacity component and an energy componet. A cost classification analysis was made by assigning various costs to the two components. The main costs assigned to the capacity component include: power capital and replacement investments, interest on power investments, irrigation investments of the storage units to be repaid by power revenues, and one-half the irrigation aid to participating projects. The major costs assigned to the energy component include: O&M, firming-energy purchases, power wheeling, salinity construction costs, and one-half the irrigation aid to participating projects. Results of the cost classification analysis indicated that revenues from the sale of capacity and energy should be given approximately equal weight.

A low demand rate would probably benefit those customers who purchase CRSP peaking capacity, but could be detrimental to project irrigation pumpers. In consideration of the cost classification and in order to minimize discrimination among types of power users, it is felt that the new power rate should be based on equal revenues from capacity and energy sales at 58.2-percent load factor. The first rate established in 1962 also was on this basis. The energy component has been rounded off to the nearest 0.1 mill/kWh and the capacity component to the nearest 0.5 cent/kW-month, resulting in a revised proposed CRSP rate of 4.0 mills/kWh and $1.655/kW-month. Because of rounding in this fashion, the revised repayment study of November 1980 indicated a small surplus (approximately $4.0 million) in power revenues above the requirements of the law by the critical year 2046.

Adjustment Provision For Purchased Energy Costs

During the April 1979 public information forums Western announced that it was considering the possibility of including, in the new rate schedules, provision to pass through purchased power costs. Such a provision was under consideration because during periods of adverse hydro conditions large purchases are required, and funds for such purchases can be quickly depleted without some means of quick (i.e., monthly) recovery. However, such a provision has not been included for the following reasons:

1. Purchases are often made in the autumn and winter as a hedge against the possibility of poor water conditions in the following spring and summer. It is often late summer before the extent to which such purchases were necessary for firming is known. Purchases may turn out to have been in excess of firming requirements and, to that extent, are available for other uses, such as oil conservation sales. For this reason the purchased power costs cannot be passed on at the time they are made and at the time when the revenues are needed.

2. When firming purchases are necessary for the CRSP, they are also apt to be necessary for the Parker-Davis Project, which is downstream from the CRSP. This project purchases its firming requirements from the CRSP, further complicating the determination on a monthly basis of just how much of the power purchased by the CRSP is for firming the supply to and at the cost of its own firm-power customers.

3. The power repayment studies on which the rate increase is based have been prepared using average hydro conditions for energy production, and assume that revenues from the sales of surplus energy in better-than-average water years will offset the cost of the purchase of firming energy during poorer-than-average water years. Implementation of a passthrough provision for purchased power costs would upset this balance.

Alternative Power Rates and Conservation

Some customers stated that the repayment study implies that the rate is being increased because of conservation desires or to bring it closer to alternative rates. As stated in the rate brochures, in presentations at forums, and in all written and verbal answers to questions, the level of the rate increase determination is based on payment of costs and investments and was not influenced by alternative power rates or conservation desires. Rather, any comparison with other power rates in the general area is to demonstrate that the proposed cost-based rates are not in excess of market value. Were project costs such that required rates would be in excess of market value, the rates would be based on the market value and the project would operate at a loss until such time as market value increased sufficiently to allow the rates to be increased to recover costs, including repayment of the deficit with interest.

Charges for Wheeling Over Parker-Davis Project System

Some customers who receive CRSP power over the Parker-Davis Project system contend that the CRSP power rate should include the cost of wheeling over that system so that they would not have to pay for such wheeling (except as a component of the CRSP rate for power). The present CRSP marketing criteria, which were adopted and published in the Federal Register on February 9, 1978, after consultation with the customers, include a provision that any wheeling charges over other project systems such as the Parker-Davis Project system are to be paid by the customers receiving the power. The current Parker-Davis Project rate increase proposal includes provisions for such a rate, and, under the criteria, the customers receiving the power over that system must pay the costs.

Phased or Stepped Rate Increases

Some customers recommended that the proposed rate increase, if adopted, be phased or stepped over a period of years. To try to avoid confusion on this issue, Western has distinguished between phased increases and stepped increases. Western considers a phased increase to be one in which the rate is increased at regular intervals, unrelated to costs, until the final rate is in place. This was done for the Rio Grande Project because of the magnitude of the increase (from 8.15 mills per kilowatthour to over 16 mills per kilowatthour). The magnitude of this CRSP rate increase is much less and use of a phased increase is not warranted.

Western considers a stepped increase to be one in which the rate is increased based on and at the time of anticipated significant future additions to the system. The arguments for and against stepped increases are the same as those which are discussed in the second paragraph under the heading "Federal Projects Use Repayment Basis to Set

Revenue Levels" earlier in this order. The anticipated significant future additions for the CRSP are not power features, but rather are irrigation features, and, as discussed in the paragraph already cited, it is essential to spread the costs of such features among as many power customers over as long a period as possible.

Applicability of the Public Utility Regulatory Policies Act of 1978 (PURPA)

The standards set forth in the PURPA, 16 U.S.C. 2601 *et seq.* are not applicable to sales that are for resale, and are not currently applicable to CRSP sales that are not for resale because CRSP has not had such sales in excess of 500 million kWh in any year. Nonetheless, each of the 11 standards was considered and briefly discussed in the April 1979 brochure entitled "Colorado River Storage Project and Participating Projects—Proposed Power Rate Adjustment" and interested parties were given opportunity to comment on the discussion in writing and/or orally at the forums which were held. Although not subject to the PURPA standards, CRSP is complying with those standards to the extent that it can reasonably do so as discussed in the referenced brochure.

Other Considerations

Public Comment Procedures

A number of comments reflected concern that the procedures followed by Western in promulgating the proposed rate increase did not conform to basic due-process-of-law requirements. The lack of opportunity for cross examination of witnesses and the absence of other formalities of evidentiary hearings were among the alleged deficiencies cited.

We are satisfied that the opportunities provided by Western for public information and comment were more than adequate. The reasons for the rate increase and the methodology used in developing it were fully explained. Requested information was supplied. The parties were afforded access to Western's computer program. All questions were answered. Because of the two occasions upon which changes were made, the comment period lasted more than 11 months. Formal evidentiary procedures are not required in the development and review of Federal power rates.

National Environmental Policy Act (NEPA)

A number of comments raised the issue of whether the rate adjustment is subject to provisions of the NEPA. Procedures for compliance with NEPA are applicable to CRSP ratemaking. A preliminary environmental evaluation was made for and reported in the April 1979 proposed power rate adjustment brochure. Subsequently, an environmental assessment has been made in accordance with NEPA. The environmental assessment indicates there are no significant environmental impacts expected as a result of the proposed rate adjustment.

Leavitt Act

Commenters also questioned whether the Leavitt Act, which is cited in Section 4 of Pub. L. 84–485, authorized reduced rates for Indians. Section 4 of Pub. L. 84–485 provides, in relevant part, that: "(d) as to Indian lands within, under or served by any participating project, payment of construction costs within the capability of the land to repay shall be subject to the Act of July 1, 1932 [Leavitt Act] (47 Stat. 564)."

The first provision of the Leavitt Act authorizes and directs the Secretary of the Interior ". . . to adjust or eliminate reimbursable charges of the Government of the United States existing as debts against individual Indians or tribes of Indians in such a way as shall be equitable and just in consideration of all the circumstances under which such charges were made . . ." (Act of July 1, 1932, 47 Stat. 564, 25 U.S.C. 386a). This portion of the Leavitt Act authorized the Secretary of the Interior to grant relief on a project-by-project basis from then existing obligations under the Indian Appropriations Act for Fiscal Year 1915 (Act of August 1, 1914, 38 Stat. 582, 583) to reimburse the Government for expenditures made for Indian irrigation projects. First, neither it nor the first proviso, which defers construction costs assessed ". . . against Indian-owned lands within any Government irrigation project . . .", applied to Reclamation projects. Solicitor Finney Opinion, 54 I.D. 90 (1932). Second, both portions of the act, which derived from separate bills, provide relief only from irrigation costs and do not apply to power costs. Section 4 of Pub. L. 84–485 specifically makes the Leavitt Act applicable to participating projects, which are Reclamation projects, However, Pub. L. 84–485 does not extend the relief provided by the Leavitt Act. Consequently, since the Leavitt Act provides relief only from irrigation costs and not from power costs, neither Section 4 of Pub. L. 84–485 nor the Leavitt Act authorize reduced power rates for Indians.

Price Stability

There was a question whether any rate increases which Western might promulgate would be limited by the Council on Wage and Price Stability. On March 19, 1979, the Director of the Council on Wage and Price Stability stated in the peamble to the Interim Final Price Standard that ". . . while the price standard is intended to apply to all 'Government enterprises,' any statute mandating a particular pricing policy will, of course, take precedence." 44 FR 17910, 17911 (March 23, 1979). This interpretation of the price standards was verified in a letter to the Secretary of Energy from R. Robert Russell, the Acting Director for the Council on Wage and Price Stability. In that letter, dated August 28, 1979, the Council confirmed the Department of Energy's belief that "statutory requirements take precedence over the voluntary price standard" where power marketing administrations are involved.

Some concern remained within the Department of Energy over whether the price standard applied to the portion of the CRSP rate increase attributable to assistance for future participating CRSP projects which had not yet been funded. Differing opinions were offered on the matter as administrative interaction took place. In reaching the decision that the price standards were not applicable to any portion of the CRSP rate, the Western Area Power Administration concluded that there is no discretion to set a rate lower than that which would accumulate revenues for irrigation assistance in accordance with the apportionment formula of 43 U.S.C. 620 (e). The CRSP Act gives the Secretary discretion in the carrying out of the will of the Congress, but not to the point where repayment obligations become impaired. Revenues sufficient to assist future participating projects must be accumulated in the same manner as the Secretary of the Interior has done since the passage of the legislation in 1956. This approach is consistent with the CRSP Act, the legislative history, long/standing administrative interpretation and the ratification of that interpretation through the informed actions of Congress since 1956.

Availability of Information

Information regarding this rate adjustment, including studies, comments, transcripts, and other supporting material, is availalbe for public review in the Salt Lake City Area Office, Western Area Power Administration, 438 East 200 South, Suite 2, Salt Lake City, Utah 84147; in the office of the Administrator, Western

Area Power Administration, 1536 Cole Boulevard, Golden, Colorado 80401; and in the office of the Director of Power Marketing Coordination, 12th and Pennsylvania Avenue, NW., Washington, D.C. 20461.

Submission to the FERC

The rates herein confirmed, approved, and placed in effect on an interim basis, together with supporting documents, will be submitted to the FERC for confirmation and approval on a final basis.

Order

In view of the foregoing and pursuant to the authority delegated to me by the Secretary of Energy, I hereby confirm and approve on an interim basis, effective Jaunary 23, 1981, Rate Schedules SP-F1 and SP-FP1. These rates shall remain in effect on an intermin basis for a period of 12 months unless such period is extended or until the FERC confirms and approves these or substitute rates on a final basis, whichever occurs first.

Issued in Washington, DC, December 23, 1980.

Ruth M. Davis,

Assistant Secretary, Resource Applications.

UNITED STATES DEPARTMENT OF ENERGY, WESTERN AREA POWER ADMINISTRATION

Colorado River Storage Project; Schedule of Rates for Wholesale Firm Power Service

[Rate Schedule SP-F1 (Supersedes Schedule UC-F2)]

Effective: The first day of the first full billing period beginning on or after January 23, 1981.

Available: In the area served by the Colorado River Storage Project.

Applicable: To wholesale power customers for general power service supplied through one meter at one point of delivery.

Character and Conditions of Service: Alternating current, 60 hertz, three-phase, delivered and metered at the voltages and points established by contract.

Monthly Rate:

Capacity Charge: $1.655/kW of billing demand.

Energy Charge: 4.0 mills/kWh for all energy use up to, but not in excess of, the energy obligation under the power sales contract.

Billing Demand: The billing demand will be the greater of (1) the highest 30-minute integrated demand established during the month up to, but not in excess of, the delivery obligation under the power sales contract, or (2) the contract rate of delivery.

Billing for Unauthorized Overruns: For each billing period in which there is a contract violation involving an unauthorized overrun of the contractual firm power and/or energy obligations, such overrun shall be billed at ten (10) times the above rate.

Adjustments:

For transformer losses: If delivery is made at transmission voltage but metered on the low-voltage side of the substation, the meter readings will be increased to compensate for transformer losses as provided for in the contract.

For power factor: None. The customer will normally be required to maintain a power factor at the point of delivery of between 95-percent lagging and 95-percent leading.

United States Department of Energy, Western Area Power Administration

Colorado River Storage Project; Schedule of Rates for Wholesale Peaking Power Service

Rate Schedule SP-FP1 [Supersedes Schedule UC-FP2]

Effective: The first full day of the first full billing period beginning on or after January 23, 1981.

Available: Within and adjacent to the marketing area of the Colorado River Storage Project.

Applicable: To wholesale power customers purchasing such service under long-term contracts. Because of the nature of this class of service, it is applicable only to customers with other resources enabling them to utilize it.

Character and Conditions of Service: As specifically established by contract. Delivery will be made from the transmission system of the United States at transmission voltage, and normally only during peak hours of the purchaser's load. Return of all energy furnished shall normally be required.

Montly Rate: Capacity Charge: $1.655/kW of the effective contract rate of deliverv for peaking power or the maximum amount scheduled, whichever is the greater.

Energy Charge: 4.0 mills/kW for all energy scheduled for delivery without return.

Billing for Unauthorized Overruns: For each billing period in which there is a contract violation involving an unauthorized overrun of the contractual obligation for peaking capacity and/or energy, such overrun shall be billed at ten (10) times the above rate.

Adjustments:

For power factor: None. The customer will normally be required to maintain a power factor at the point of delivery of between 95-percent lagging and 95-percent leading.

[FR Doc. 80-40634 Filed 12-31-80; 8:45 am]

BILLING CODE 6450-01-M

federal register

Wednesday
December 31, 1980

Part XXIII

Department of Agriculture

Agricultural Marketing Service

Regulations and Policy Statements Under the Packers and Stockyards Act

DEPARTMENT OF AGRICULTURE

Agricultural Marketing Service

9 CFR Parts 201 and 203

Regulations and Policy Statements Under the Packers and Stockyards Act

AGENCY: Agricultural Marketing Service (Packers and Stockyards), U.S. Department of Agriculture.

ACTION: Proposed changes in regulations and policy statements pursuant to complete review.

SUMMARY: The agency proposes to change surety bond requirements for livestock market agencies and dealers, extend the time for deposits in custodial accounts, change some reporting forms, and enlarge the scope of the policy statement on packer sales promotion programs.

DATES: Comments must be received on or before March 2, 1981.

ADDRESS: Send comments to Deputy Administrator, Packers and Stockyards, Agricultural Marketing Service, USDA, Room 3039 South Building, 14th and Independence Avenue, SW., Washington, D.C. 20250. All comments received may be reviewed by any interested person in the Deputy Administrator's office during normal business hours.

FOR FURTHER INFORMATION CONTACT: John A. Sands, Director, Packer and Poultry Division, phone (202) 447-6771, or Harry L. Williams, Director, Livestock Marketing Division, phone (202) 447-6951, Agricultural Marketing Service, Packers and Stockyards, U.S. Department of Agriculture, Washington, D.C. 20250. The Draft Impact Analysis describing the options considered in developing these proposed amendments and the impact of implementing each option is available on request from Mr. Sands.

SUPPLEMENTARY INFORMATION: This proposed action has been reviewed under USDA procedures established in Secretary's Memorandum 1955 to implement Executive Order 12044 and has been classified "significant."

This proposed action may have a significant economic effect on a substantial number of small businesses. Direct notification of all of them is not feasible as they number many thousands. However, in addition to other mailings and publication in the Federal Register, the agency is mailing copies of this notice to all known organizations of such businesses and issuing a nationwide press release about it, to give them an opportunity to participate in this rulemaking.

On March 31, 1980, a notice was published in the Federal Register (45 FR 21168) requesting comments on a review of selected regulations and policy statements issued under the Packers and Stockyards Act, 1921, as amended (7 U.S.C. 181 *et seq.*), under the procedures described in the notice, "Improving USDA Regulations," 43 FR 50988 (November 1, 1978). The Department also requested comments on specific changes to be considered in its reports and recordkeeping requirements under the P&S Act. See also the notice at 44 FR 71802, December 11, 1979.

A total of 21 comments were received in time for consideration, in addition to the 66 comments received in response to the earlier notice.

Persons Filing Comments

Five comments were received from State and Commonwealth Departments of Agriculture; four comments were from various livestock producer organizations; four comments were from organizations representing auction markets; one comment was from an association of livestock market agencies; one comment was from an association of stockyard operators; two comments were from national meat packers' associations; one comment was from an individual meat packer; two comments were from individual auction market operators and one comment was from a banker representing an auction market operator.

The following groups, individuals or associations recommended changes in the regulations or policy statements.

	State Depts. of Agric.	Indiv. Auction Markets	National Livestock Mktg. Assn	Natl. Packer Assn.	Law Firm	Lstk. Producers Orgs.	Financial Insts. Serving Mkt. Agies	Indiv. Meat Packers	Stock-yard Assn.	Market Agency Assn.	Livestock Insurance Services	Producers Marketing Assn.
No. of Comments Per Group	5	2	2	2	1	3	1	1	1	1	1	1
Regulations:												
201.2			2		1							
201.3			1									
201.4			1									
201.5			1									
201.6			1									
201.7			1			1						1
201.30		1	2	1	1	1	1				1	1
201.39			1			1						
201.40			1									
201.41			1									
201.42			2		1	1	1	1				
201.43			1					1				
201.51			2	1	1				1	1		
201.97			2	1	1							
Policy Statements:												
203.2	1											
203.3	1			1								
203.4	2											
203.6	1			1					1			
203.7			1	1		1						1
203.14	1											

*The numbers in the table represent the number of comments received out of each grouping.

General Comments

The general tone of the comments supported the agency's effort to review the majority of its regulations. Several of the regulations proposed for review received no comments. One comment recommended deleting all regulations on livestock marketing. Several comments were received supporting all or some of the regulations now under review and recommending no chnges be made. A comment recommended that regulations § 201.27 and § 201.34 be changed from category I (believed not to need review at this time because reviewed since July 1976) to category III (proposed for complete review). P&S has considered a change in the categories of these regulations and has determined it is not in the public interest to change these regulations now. Therefore after reviewing all comments P&S is not publishing any proposed revision of these regulations: §§ 201.3, 201.4, 201.5, 201.6, 201.7, 201.27, 201.34, 201.39, 201.40, 201.41 and 201.97 and the following policy statements: §§ 203.2, 203.4, 203.6, 203.7 and 203.14.

Bonding

Several comments were received concerning the level of bonding. One comment recommended the lowering of the amount of bonds for order buyers because the market should look to the packer principal for payment. Five comments recommended increased bond coverage. After reviewing all comments P&S is proposing revision of regulation § 201.30. The minimum bond would be increased to $10,000 for market agencies buying on commission and dealers who buy in excess of $260,000 of livestock annually. Market agencies and dealers buying $260,000 or less annually would be required to file a $5,000 bond. The regulation requires only 10 percent of the amount otherwise required for a bond above $50,000 and this threshold would be raised to $75,000. For such persons and market agencies selling on commission, the multiple for required coverage would be raised from $2,000 to $5,000. There would be no other change for market agencies selling on commission.

A study was made of the bond claim data maintained on market agencies buying on commission and dealers for the period July 1, 1974, through July 30, 1980. Thirty-four pecent of the bonds called on were less than $10,000 and 15 percent of the bonds were over $50,000. Had the proposed bond formula been in effect an additional 23 percent of the bonds of less than $10,000 would have been adequate to cover all claims. Similarly, 19 percent more of the bonds over $50,000 would have provided sufficient funds to cover all claims. If the proposed bond formula had been in effect it would have provided at least $600,000 in additional funds to cover bond claims. Total bond coverage for market agencies buying on commission and dealers under the proposed formula will increase approximately $14 million at a cost of $140,000 to the dealers and market agencies.

Changing the formula for determining bonds for market agencies selling livestock on a commission basis is not proposed, other than the change in the multiple, mentioned above. A review of the bonds called on of market agencies selling livestock shows that 77 percent of the bonds were of sufficient size to cover the claims filed. However, had the formula of $75,000 plus 10 percent of the excess over $75,000 been in effect, six additional bonds would have been sufficient to cover claims filed and would have provided approximately $180,000 in additional funds to cover all bond claims. The change in the threshold would increase total bond coverage approximately $24 million at a cost of $240,000 to the selling agencies.

Custodial Accounts

Comments were received recommending changes in regulation § 201.42(c). These comments primarily addressed the financial burden on the market agency of placing into the custodial account funds equal to proceeds receivable from sale of consigned livestock but not collected by the end of the third day after the sale. Another comment recommended relaxing the requirements that custodial funds be deposited only in FDIC insured banks and that investment of the float of custodial funds in certificates of deposit be with the bank where the custodial account is maintained. Other comments received recommended no changes be made in this regulation.

Funds which are deposited by market agencies into custodial accounts are those held by the financial institution for the sellers of livestock. For this reason, the agency does not propose relating its present requirements that these custodial funds be deposited only in banking institutions fully insured by FDIC.

The proposed revisions of regulation 201.42 would delete superfluous language in (b), extend the time for market agencies selling on commission to deposit funds in their custodial accounts by excluding nonbusiness days from the three days now required, and permit custodial account funds to be invested in savings accounts as well as certificates of deposit in the same bank in which the custodial account is maintained.

Reports

Several comments were received concerning regulation 201.97 and the format of the various annual reports which P&S requires.

On the following forms: P&S-5, P&S-116, P&S-116-1, P&S-122, P&S-124, P&S-124-1, P&S-132, P&S-134, P&S-135, P&S-212, P&S-216 and P&S-218, no comments were received.

P&S-125, the packer annual report, was revised effective February 1979, as shown in the notice published on March 31, 1980. The revision substantially reduced the information required, and thus will decrease the workload for the industry. Two comments on it were received from packer associations, recommending broader use of information now provided to other government agencies and minimizing requirements for information which may be marginally useful to P&S but which would harm competition if released under a Freedom of Information Act request. Two other comments on it were received from state departments of agriculture, that the reports were necessary and needed no change. Packers are filing the revised report for the first time in 1980. The 1980 reports will be analyzed for effectiveness in administering the Act and further consideration will be given to additional revisions on the basis of the comments filed and our analysis.

P&S-126, The Annual Report of Market Agencies (Commission Firms), and P&S-129, the Annual Report of Posted (Terminal) Stockyards, were proposed to be revised as shown in the notice published on March 31, 1980. Comments were received from The River Markets Group, whose members represent the majority of those required to complete P&S-126. Comments were received from the American Stock Yards Association, whose members represent the majority of those required to complete P&S-129. Each group recommended prompt approval by OMB and utilization of the revised form applicable to its group. The OMB approval has now been obtained. The revised forms will be furnished to the persons required to file them. The use of both of these revised report forms will result in substantial reduction in the volume of information reported by such firms.

Regarding P&S-130, Annual Report of Market Agency (Auction Market), four comments were received recommending a reduction in the amount of information required, and three recommending that the form be left basically unchanged.

Sales Promotion Programs

Two comments were received concerning policy statement 203.3—Statement With Respect to Meat Packer Sales Promotion Programs. One of the comments recommended deletion, because the policy was too restrictive and the other because if was superfluous and contrary to antitrust policy. P&S believes the policy statement is still necessary and, based upon recent investigations, feels the practice has expanded to customers other than retailers. The statement has been rewritten to reflect this change so that it clearly applies to all sales promotion programs with a specified exception.

Packers Purchases for Export

Three comments were received concerning policy statement 203.6—Statement With Respect to Purchase of Livestock by Packers for Export. Based on the comments received, P&S does not intend to alter its present policy and will retain 203.6 in its present form.

Revisions Made and Proposed

Three forms have been revised and will be used for 1980 reports: P&S–124, Annual Report of Dealer or Market Agency Buying on Commission, P&S–124–1, Dealer Business Report, and P&S–130, Annual Report of Market Agency (Auction Market).

P&S–124 was revised as follows:

1. Section 1, items 5 and 7 were deleted.
2. Section 2 was revised to require bond information on a quarterly basis.
3. Sections 7 and 8 were deleted.

P&S–124–1 was revised by deleting item 2 of section 2 and deleting section 4.

P&S–130 was revised as follows:

1. Sections 5, 6, 11, 12, 13 and 14 were deleted.
2. The profit and loss statement for dealer and market agency was combined with simplified.
3. The details of market support and dealer activity were eliminated and only head count will be requested.

These revisions will substantially reduce the volume of information required of auction markets and dealers on an annual basis and materially reduce the time required for compliance. For that reason firms will be required to file the revised report form to cover the operations conducted during 1980 even though comments have not been received concerning the changes in the report forms. Comments filed concerning changes in the report forms will be used to determine if other changes should be made. Businesses filing the reports will be advised when they can comment if they wish to suggest changes in the report form.

Copies of the report forms may be obtained from Jack W. Brinckmeyer, Rates and Registrations Branch, Livestock Marketing Division, Agricultural Marketing Services, U.S. Department of Agriculture, Washington, D.C. 20250, phone (202) 447–4366.

The changes proposed in the following regulations and policy statements are a result of the comments received after March 31, 1980, Federal Register publication and those applicable comments received in response to December 11, 1979, Federal Register publication. The comments were analyzed for the overall effect such changes would have on the entire livestock and meat packing industries. P&S proposes to amend the regulations and policy statements as set forth below.

If any information is communicated orally to personnel of the agency, which is not a matter of public record, and which may influence the final decision on the proposed rulemaking, such information and its source will be reduced to writing and made available for inspection the same as written submissions in response to this notice, and the time for submission of comments will be extended if and as appropriate to permit others to reply to such information.

Done at Washington, D.C. December 24, 1980.

Calvin W. Watkins,

Acting Deputy Administrator, Packers and Stockyards, Agricultural Marketing Service.

It is proposed to revise §§ 201.2, 201.30, 201.42, and 203.3 to read as set forth below.

§ 201.2 Terms defined.

The definitions of terms contained in the Act shall apply to such terms when used in the Regulations under the Packers and Stockyards Act, 9 CFR Part 201; Rules of Practice Governing Proceedings under the Packers and Stockyards Act, 9 CFR Part 202; Statements of General Policy under the Packers and Stockyards Act, 9 CFR Part 203; and Organization and Functions, 9 CFR Part 204. In addition the following terms used in these parts shall be construed to mean:

(a) "Act" means the Packers and Stockyards Act, 1921, as amended and supplemented (7 U.S.C. 181 *et seq.*).

(b) "Department" means the United States Department of Agriculture.

(c) "Secretary" means the Secretary of Agriculture of the United States, or any officer or employee of the Department authorized to act for the Secretary.

(d) "Administration" or "agency" means the Agricultural Marketing Service of the Department.

(e) "Administrator" or "agency head" means the Administrator of the Administration or any person authorized to act for the Administrator.

(f) "Regional Supervisor" means the regional supervisor of the Packers and Stockyards program for a given area or any person authorized to act for the regional supervisor.

(g) "Person" means individuals, partnerships, corporations, and associations.

(h) "Registrant" means any person registered pursuant to the provisions of the Act and the regulations in this part.

(i) "Stockyard" means a livestock market which has received notice under section 302(b) of the Act that it has been determined by the Secretary to come within the definition of "stockyard" under section 302(a) of the Act.

(j) "Schedule" means a tariff of rates and charges filed by stockyard owners and market agencies.

(k) "Custom Feedlot" means any facility which is used in its entirety or in part for the purpose of feeding livestock for the accounts of others, but does not include feeding incidental to the sale or transportation of livestock.

§ 201.30 Amount of market agency, dealer and packer bonds.

(a) *Market agency selling livestock on commission.* Each bond must be at least $10,000 or any higher amount as established by applicable state law. To compute the required amount of each bond, first divide the actual number of days on which livestock was sold into the dollar value of the livestock sold during the preceding business year, or the substantial part of that business year, in which the market agency did business. The amount of the bond must be the next multiple of $5,000 above the amount so determined. The divisor (number of days) must be no greater than 130. When the computation exceeds $50,000, the amount of the bond need not exceed $50,000 plus 10 percent of the excess over $50,000.

(b) *Dealer or market agency buying on commission.* For annual purchases of $260,000 or less each bond must be at least $5,000; for annual purchases of more than $260,000 at least $10,000; or any higher amount as established by applicable state law. To compute the required amount of each bond, first find the average amount of purchases of livestock during a period equivalent to 2 business days based on the total amount of purchases for the preceding business

year, or the substantial part of that business year, in which the dealer or market agency or both did business. The amount of the bond must be the next multiple of $5,000 above that amount. For purposes of this computation, no more than 260 must be used as the number of business days in any year. When the computation exceeds $75,000, the amount of the bond need not exceed $75,000 plus 10 percent of the excess over $75,000.

(c) *Market agency acting as clearing agency.* Each bond must be at least $10,000 or any higher amount as established by applicable state law. To compute the required amount of each bond, first find the average amount of purchases of livestock of all persons for which the market agency served as a clearor during a period equivalent to 2 business days based on the total amount of purchases for the preceding business year, or the substantial part of that business year, in which the market agency acting as a clearing agency did business. The amount of the bond must be the next multiple of $5,000 above that amount. For purposes of this computation, no more than 260 must be used as the number of business days in any year. When the computation exceeds $75,000, the amount of the bond need not exceed $75,000 plus 10 percent of the excess over $75,000.

(d) *Packer.* Each bond must be at least $10,000. To compute the required amount of each bond, first find the average amount of purchases of livestock during a period equivalent to 2 business days, based on the total amount of purchases for the preceding business year, or the substantial part of that business year, in which the packer did business. The amount of the bond must be the next multiple of $5,000 above that amount. For purposes of this computation, no more than 260 must be used as the number of business days in any year.

(e) If a person applying for registration as a market agency or dealer has been engaged in the business of handling livestock before the date of the application, the value of the livestock handled, if representative of future operations, must be used in computing the required amount of bond. If the applicant for registration is a successor in business to a registrant formerly subject to these regulations, the bond of the applicant must be at least that required of the prior registrant, unless otherwise determined by the Administrator. If a packer becomes subject to these regulations, the value of livestock purchased, if representative of future operations, must be used in computing the required amount of bond. If a packer is a successor in business to a packer formerly subject to these regulations, the amount of bond of the successor must be at least that required of the prior packer, unless otherwise determined by the Administrator.

(f) Whenever the Administrator has reason to believe that a bond is inadequate to secure the performance of the obligations of the market agency, dealer or packer covered thereby, the Administrator shall notify such person to adjust the bond to meet the requirements of this section, or if a bond is inadequate because of the volume of business the market agency, dealer or packer conducts on a seasonal or otherwise irregular basis, the Administrator shall notify such person to adjust the bond to meet requirements the Administrator determines to be reasonable.

§ 201.42 Custodial accounts for trust funds.

(a) *Payments for livestock are trust funds.* Each payment that a livestock buyer makes to a market agency (whether selling or buying, on commission) is a trust fund until the market agency's custodial account has been paid in full. Funds deposited in custodial accounts are also trust funds. This is the case under either the net proceeds or gross proceeds method of maintaining the custodial account for market agencies selling livestock on commission.

(b) *Custodial accounts for shippers proceeds.* Every market agency engaged in selling livestock on a commission or agency basis shall establish and maintain a separate bank account designated as "Custodial Account for Shippers' Proceeds," or some similar identifying designation, to disclose that the depositor is acting as a fiduciary and that the funds in the account are trust funds. Each such market agency shall adopt, and thereafter continuously follow, one of the methods of making deposits in its custodial account as set forth in paragraphs (c) and (d) of this section.

(c) *Deposits in custodial accounts under gross proceeds method.* The market agency shall deposit in its custodial account before the close of the next business day (the day on which it is customary to do business whether or not the market agency does business on that day) after livestock is sold (1) the proceeds from the sale of livestock that have been collected, and (2) an amount equal to the proceeds receivable from the sale of livestock that are due from (i) the market agency, (ii) any owner, officer, or employee of the market agency, and (iii) any buyer to whom the market agency has extended credit. The market agency shall also deposit in the custodial account all proceeds collected until the account has been reimbursed in full, and shall, before the close of the third such business day following the sale of livestock, deposit an amount equal to all the remaining proceeds receivable whether or not the proceeds have been collected by the market agency.

(d) *Deposits in custodial account under net proceeds method.* The market agency shall deposit in its custodial account before the close of the next such business day after livestock is sold, the proceeds that have been collected and an amount equal to all the remaining proceeds receivable from the sale of the livestock less marketing charges due the market agency.

(e) *Withdrawals from custodial accounts.* The custodial account for shippers' proceeds shall be drawn on only for payment of (1) the net proceeds to the consignor or shipper, or to any person that the market agency knows is entitled to payment, (2) to pay legal charges against the consignment of livestock which the market agency shall, in its capacity as agent, be required to pay, and (3) to obtain any sums due the market agency as compensation for its services.

(f) *Custodial accounts for buyers funds.* If the Secretary finds that any market agency has used for its own purposes any funds received for the purchase of livestock on a commission or agency basis, or any other funds which have come into its possession in its capacity as agent of the buyer, the market agency shall thereafter deposit any such funds in a separate bank account designated as "Custodial Account for Buyers' Funds," or some similar identifying designation, to disclose that the depositor is acting as a fiduciary and that the funds in the account are trust funds. This account shall be drawn on only (1) for payment of the price of livestock purchased on behalf of a principal, (2) to pay all legal charges incurred in connection with the purchase of livestock which the market agency shall, in its capacity as agent, be required to pay, and (3) to obtain the sum due the market agency as compensation for its services.

(g) *Accounts and records.* Each market agency shall keep such accounts and records as will disclose at all times the handling of funds in such custodial accounts, whether for shippers' or buyers' funds. Accounts and records must at all times disclose (1) the names of the consignors and the amount due and payable to each from funds in the

Custodial Account for Shippers' Proceeds, and (2) the names of principals from whom funds have been received in the market agency's capacity as buyer for principals, the amount of funds received from the principals, and the amount paid on behalf of principals from funds in the Custodial Account for Buyers' Funds.

(h) *Insured banks.* Such custodial accounts for either shippers' or buyers' funds must be established and maintained in banks whose deposits are insured by the Federal Deposit Insurance Corporation.

(i) *Certificates of deposit and/or savings accounts.* Funds in a custodial account for shippers' proceeds may, to the extent that these practices do not impair the market agency's ability to meet its obligations to its consignors, be maintained in an interest-bearing savings account and/or invested in one or more certificates of deposit. The savings account must be properly designated as a part of the custodial account of the market agency in its fiduciary capacity as trustee of the custodial funds and maintained in the same bank as the custodial account. The certificates of deposit must be issued by the bank in which the custodial account is kept and must be made payable to the market agency in its fiduciary capacity as trustee of the custodial funds.

§ 203.3 Statement with respect to meat packer sales promotion programs.

(a) Packers subject to the Act have sponsored meat and meat food product sales promotion programs under which valuable gifts, ranging from articles of clothing to automobiles and outboard motor boats and motors, have been offered and given to their retail food store customer accounts and to the employees of such customer accounts. Many of these promotion programs have been based upon a "point system" whereby "participating customer accounts" were credited with points for each unit of a promotion item purchased from a sponsoring packer during a specified period of time. At the end of such specified time, the accumulated points were redeemed by persons connected with the customer accounts for prizes and gifts selected from a gift catalog supplied by the sponsoring packer.

(b) Investigations have disclosed these sales promotion programs constitute a marketing practice under which sellers tend to compete in the sale of their products on the basis of inducements offered to their customers in the form of personal gifts, rather than on the basis of the merits and prices of competing products, and may result in (1) the lessening of competition by unfairly restricting sales of competing products, (2) an unreasonable competitive burden on small size packers, (3) the making or giving of undue or unreasonable preferences or advantages, and (4) an adverse impact on prices to consumers.

(c) It is the view of the Administration that sales promotion programs which tend to produce any of the results enumerated in paragraph (b) of this section constitute violations of section 202 of the Act. Packers subject to the Act should voluntarily discontinue sponsoring or conducting any such program. If any packer sponsors or conducts such sales promotion programs the Administration may issue a complaint charging the packer with violation of section 202 of the Act. In the formal administrative proceeding the Judicial Officer of the Department shall determine, after full hearing, whether the packer has violated the Act and should be ordered to cease and desist from continuing the violation, and whether any other sanction authorized by the Act should be imposed.

(d) Paragraphs (a), (b), and (c) of this section are not intended to apply to promotion programs by packers which are directed at wholesale customer accounts who do not sell or distribute meat products that compete directly with those of the sponsoring packer.

[FR Doc. 80-40688 Filed 12-30-80; 8:45 am]
BILLING CODE 3410-02-M

federal register

Wednesday
December 31, 1980

Part XXIV

Civil Aeronautics Board

Pre-Filing Tariff Approval Procedures and Special Tariff Permission

CIVIL AERONAUTICS BOARD

14 CFR Part 221

[Regulation ER-1205; Amdt. No. 54; Docket 38147]

Pre-Filing Tariff Approval Procedures

AGENCY: Civil Aeronautics Board.

ACTION: Final rule.

SUMMARY: The CAB adopts new pre-filing tariff approval procedures for domestic fares of U.S. certificated airlines, so that fare reductions can be implemented within 1 day. The new procedures apply to both original fares and matching competitive fares.

DATES: Adopted: December 18, 1980; effective: December 18, 1980.

FOR FURTHER INFORMATION CONTACT: Thomas Moore, Domestic Fares & Rates Division, Bureau of Domestic Aviation; Civil Aeronautics Board, 1825 Connecticut Avenue, N.W., Washington, D.C. 20428; 202-673-5038.

SUPPLEMENTARY INFORMATION: This rule sets up a procedure to minimize delay in acting on airlines' proposals to reduce domestic passenger fares. The procedure is designed to encourage a more responsive and dynamic pricing system without fundamentally changing the principles of the tariff system, which is required by the Federal Aviation Act to continue until 1983. Under the new procedure, if an airline files an application for a fare decrease in the morning, the Board will take action on it the same day. The airline can them begin charging the fare the next day, and the tariff amendment itself must be filed within 7 days. Special rules apply to applications that are filed on weekends and holidays: These procedures are not available for fares that raise significant questions of lawfulness.

Background

Airlines are required by section 403 of the Act to state their fares in tariffs filed with the Board, and to sell air transportation to passengers only in accordance with those tariffs. These tariffs are ordinarily required by section 403(c) to be filed at least 60, 30, or 25 days before they become effective, depending on the nature of the fare. For certain fares, however, the Board has a policy of granting Special Tariff Permission (STP) to file on less than statutory notice. The policy was liberalized by ER-1171 and PS-91 (45 FR 20059, 20071; March 27, 1980), so that the Board now grants STP for fares within its zones of fare flexibility as long as the fares do not present a significant question of lawfulness. The policy and rules governing STP appear in 14 CFR 399.35 and Subpart P of 14 CFR Part 221.

By reducing the waiting period for implementation of fares that are clearly lawful, these regular STP procedures foster competition and mitigate some of the disadvantages of the tariff system. They still require the airline to print and file the tariffs after the permission is granted, however, which can cause a delay of several days. Furthermore, they do not specify how long the Board will take to grant the permission, thus creating additional uncertainty.

The Notice of Proposed Rulemaking

To reduce further the potential delay in introducing fare reductions, the Board proposed procedures for expedited approval and implementation. (EDR-402/ODR-21; 45 FR 31411; May 13, 1980) (the NPRM). Under the proposal, carriers would file a request for pre-filing tariff approval combined with an STP application. Applications would be filed directly with the Chief of the Tariffs Division, who would have delegated authority to act on them. The key features of the proposal were that (1) applications would be acted upon the same day if filed before noon, and otherwise on the following business day, and (2) upon notification of the approval, the airline would charge the proposed fare when it became effective, which could be as early as 12:01 a.m. the next day. The airline would be exempted from section 403 of the Act to the extent necessary to charge the approved fare before the tariff was formally amended. That amendment would then have to be filed within 7 days after approval of the STP application. Meanwhile, the fare approved under the proposed procedures would be the legal fare to be charged by the airline, with the same legal status as a fare set forth in a filed tariff. No further change would be permitted in any fare approved by the proposed procedures until after the tariff amendment was filed.

Comments on the Proposed Rule

Comments on the NPRM were filed by the Airline Passengers Assocation (APA), Continental Air Lines, Hughes Airwest, Trans World Airlines, Transamerica Airlines, and Lucie Bamberger, a travel agent.

The APA and the airline commenters generally supported the proposed rule as a useful step toward full pricing deregulation that would promote competition and reduce unnecessary paperwork. The airlines also suggested some refinements and clarifications. Continental stated that an airline initiating a fare change under these procedures should be allowed to meet subsequently filed lower fares without having to wait until its tariff is filed. Continental also asked that we clarify the relationship between these procedures and the requirement in § 221.191(e) that airlines nofity interested persons of certain STP applications. Hughes Airwest stated that rapid changes in discount fares are making it harder for airlines to provide accurate fare quotations. It objected to a suggestion by the Bureau of Consumer Protection that inaccurate quotations may indicate "potential deception of prospective passengers and possible violations of Section 411 of the Federal Aviation Act." TWA stated that airlines should be allowed to implement matching fare reductions immediately upon approval rather than waiting until 12:01 a.m. the next day. It also noted that an airline obtaining approval of a fare reduction on a Friday would have an artificial advantage over other airlines, which could not obtain approval of matching filings over the weekend when Board offices are closed. TWA's suggested solution was to delay the effectiveness of Friday-approved fares until 12:01 a.m. Monday. Transamerica asked that we clarify that these procedures apply only to domestic air transportation.

Ms. Bamberger opposed the procedures as making travel agents' work difficult and time consuming, and implied that the opportunity to implement discount fares within a matter of hours did not amount to a real benefit.

The Final Rule

After considering all the comments we have decided to adopt pre-filing tariff approval procedures essentially as proposed. The comments have prompted some changes, which are discussed below. These procedures should promote innovation and enable the pricing of domestic air transportation to more closely resemble a freely competitive market. We disagree with Ms. Bamberger's implication that there would be no real benefits. The advantage of speeding up the implementation of fare reductions is not merely that the lowered fares will be available to passengers a few days earlier than otherwise. The new scheme promotes fare reductions that would otherwise not be introduced at all.

We agree with Continental's suggestion that the airline initiating a fare reduction should not be locked into the new fare during the several days it may take to file a tariff reflecting the

change. If the initiating airline could not respond quickly enough to a matching or undercutting fare from another airline, there would be little advantage to using these procedures. The final rule therefore allows a succession of fare changes during the time it takes to file a tariff amendment reflecting the first change. Each change must appear in a tariff filing. A succession of changes may be reflected in a single tariff amendment by showing the superseded fares and their effective dates in footnotes. A single filing is not required, however, as long as each change is filed within 7 days after it is approved.

We are not adopting TWA's suggestion that airlines be allowed to implement fare changes immediately upon approval instead of having to wait until 12:01 a.m. on the next day. The effect of the 1-day delay between approval and effectiveness is to give an airline that decides to put in a new lower fare at least a 1-day lead on any response by its competitors. In an ideal competitive environment where no governmental approval was required and price changes could be effected immediately, innovators could obtain an advantage over their competitors by choosing the time and method of disclosing their price cuts. The necessarily centralized nature of filing and obtaining Board approval, however, takes the edge off the innovator's advantage. To preserve the advantage and most closely replicate unrestricted competition, some artifical lag in competitors' implementation times is necessary. The final rule therefore includes the proposed 1-day lag for all approvals under the new procedures.

The 3-day advantage that the proposed rule would allow for a Friday-approved fare, however, is longer than necessary. It would also result in most filings for approval under the new procedures being made just before noon on Fridays. TWA's suggested approach of merely delaying the effectiveness of the new fare until Monday morning, however, would still skew the filings toward Fridays. We have chosen instead a procedure that creates less distortion. As set forth in the NPRM, a fare that is approved on a Friday or a day before a holiday can be put into effect at 12:01 a.m. the next day. The final rule differs from the proposed one, however, by allowing applications to be filed on weekends or holidays as long as they propose to match a fare approved under these procedures on the preceding business day. The applications must be file by Western Union TWX (7108229066 CABAIR WSH). Along with the other information required in applications (§ 221.195(b)(1)), it must identify the fare to be matched, by airline, fare class (e.g. Coach, Super Saver), and dollar amount. If it is filed before noon, as indicated on the TWX, the airline may consider it as having been granted on that day and so put the new fare into effect at 12:01 a.m. the next day. The Board will act on the application on the next day that it is open for business. We expect that nearly all weekend applications will be approved. If an application is disapproved, as it might be for a procedural defect or for proposing a fare that was not a matching fare, the disapproval will be prospective only.

Section 221.191(e) of the current rules requires an airline seeking STP to notify other airlines and affected civic parties "whenever the airline has reason to believe the tariff will be controversial." Continental suggested that, in light of the rapid introduction and approval of fare decreases that is contemplated with these new procedures, no fare decreases should be considered controverial within the meaning of § 221.191(e) and no notice of the application should be required. We agree with this interpretation of "controversial," and that the immediate telegraphic notice requirement would frustrate the use of these procedures. But under the first clause of § 221.191(e), notice is required even for noncontroversial fares when the fare will be outside the *statutory* zone of reasonableness, which extends only 50 percent below the standard industry fare level. In a separate notice of proposed rulemaking (EDR-418) issued along with this final rule, we are proposing to amend that clause to cover only fares that are outside the broader Board-established zone (§ 399.32). That zone allows full downward fare flexibility. The proposal also addresses international fares and is accompanied by Order 80——, which grants an exemption from the notice requirement for all noncontroversial fare filings within Board-established fare flexibility zones while the rulemaking is in progress.

In response to Transamerica's suggestion, § 221.195(c) has been revised to make it clear that these new procedures apply only to domestic passenger fares. Hughes Airwest's argument that the procedures could make it harder for airlines to provide accurate fare quotations did not call for any changes in the proposed rule. We will not speculate on whether fare misquotes are unfair or deceptive practices within the meaning of section 411 unless a specific case is presented.

Section 221.191(a) prescribes the form and, by cross reference to § 221.241, the content of STP applications in general. We are amending it to clarify that applications under the procedures adopted today are governed by the simpler form and content provisions of new § 221.195. The amendment also substitutes "statutory notice" for an obsolete reference to 30-day notice. Finally, the authority citation for Part 221 is revised to eliminate unnecessary references to the Administrative Procedure Act and conform to current Federal Register practice.

We plan to evaluate the usefulness of this rule by monitoring the number of filings under the new procedures.

Because this rule relieves a restriction and creates no additional burden, we find that it may become effective immediately.

Accordingly, the Civil Aeronautics Board amends Subpart P of 14 CFR Part 221, *Tariffs*, as follows:

1. The authority citation for Part 221 is revised to read:

Authority: Secs. 102, 204, 401, 402, 403, 404, 411, 416, 1001, 1002, Pub. L. 85-726, as amended, 72 Stat. 740, 743, 754, 757, 758, 760, 769, 771, 788; 49 U.S.C. 1302, 1324, 1371, 1372, 1373, 1374, 1381, 1385, 1481, 1482.

2. The Table of Contents is amended by adding a new § 221.195, to read:

Subpart P—Special Tariff Permission to File on Less than Statutory Notice

Sec.

* * * * *

221.195 Pre-filing tariff approval for fare reductions.

* * * * *

3. In § 221.191, paragraph (a) is revised to read:

§ 221.191 How to prepare and file applications for Special Tariff Permission.

(a) *Form.* Except as set forth in § 221.195, each application for Special Tariff Permission to file a tariff on less than statutory notice shall be prepared in the form prescribed in § 221.241 and shall show all of the information required by that section.

* * * * *

4. A new § 221.195 is added to Subpart P, to read:

§ 221.195 Pre-filing tariff approval for fare reductions.

(a) Carriers obtaining Special Tariff Permission under this section are exempt from section 403 (b) and (c) of the Act to the extent necessary to charge passenger fares approved by the Board under these procedures.

(1) Applications shall be filed with the Chief, Tariffs Division, Bureau of Domestic Aviation, and be entitled "Special Tariff Permission Application No. —Pre-filing Approval

Requested." The title page of the application shall include the name and telephone number of the contact person for the carrier.

(2) Applications filed with the Board before 12 noon on any business day will be acted on the same day. Applications filed with the Board after 12 noon will be acted on by the end of the next business day. The Chief, Tariffs Division, will inform the carrier by telephone as soon as a decision is made on the application.

(3) The new fare may be put into effect by the carrier at 12:01 a.m. on the day following approval of the application.

(4) Within 7 days after approval of any application under this section, the carrier shall file a tariff reflecting the changed fare. The tariff shall show the date on which the fare became effective. A succession of fare changes in acordance with this section may be reflected in a single tariff filing by showing the superseded fares and their effective dates in footnotes.

(b) Applications shall be in easily readable and understandable format.

(1) The application shall describe: (i) the fare for which approval is sought, (ii) the tariff to be amended, (iii) the current fare to be changed, if any, and (iv) the current page and revision number of the affected tariff.

(2) Extensive or complicated exhibits included with the application shall be summarized in a statement explaining the intent of the proposal.

(c) The procedures in this section apply to interstate and overseas passenger fares. They shall be used only for proposing either (1) a decrease in an existing fare, or (2) a fare that is within the downward zone set for interstate and overseas passenger fares in Subpart C of 14 CFR Part 399 and does not increase an existing fare. For these purposes an increase or decrease in an existing fare means a change in the fare amount without changing any of the conditions.

(d) The procedures in this section do not apply to proposals to match other fares already filed on statutory notice set forth in § 221.60. Applications proposing fares that raise significant questions or lawfulness, as set forth in § 399.35 of this chapter, will be denied.

(e) An application under this section may be filed on a weekend or holiday if it proposes to match a fare approved under this section on the preceding business day. Such an application shall be filed by Western Union TWX (7108229066 CABAIR WSH). Along with the information set forth in paragraph (b)(1) of this section, it shall identify the fare to be matched, by carrier, fare class, and amount. If the application is filed before noon, as indicated on the TWX, the carrier may consider it as having been granted on that day and so put the new fare into effect at 12:01 a.m. the next day. The application will be acted on by the end of the first business day after it is filed. Any disapproval will be prospective only.

By the Civil Aeronautics Board:

Phyllis T. Kaylor,

Secretary.

[FR Doc. 80-40198 Filed 12-30-80; 8:45 am]

BILLING CODE 6320-01-M

---

14 CFR Part 385

[Regulation OR-177; Amdt. No. 108; Docket 38147]

Delegations and Review of Action Under Delegation; Nonhearing Matters; Delegation to the Chief of the Tariffs Division

AGENCY: Civil Aeronautics Board.

ACTION: Final rule.

SUMMARY: In ER-1205, also adopted today, the CAB established pre-filing tariff approval procedures for domestic fares of U.S. certificated airlines, so that fare reductions can be implemented within 1 day. In this rule the CAB delegates authority to the Chief of the Tariffs Division to approve and deny applications filed under the new procedures. Supplementary information about this rule appears in ER-1205.

DATES: Adopted: December 18, 1980; effective: December 18, 1980.

FOR FURTHER INFORMATION CONTACT: Thomas Moore, Domestic Fares & Rates Division, Bureau of Domestic Aviation; Civil Aeronautics Board, 1825 Connecticut Avenue, N.W., Washington, D.C. 20428; 202-673-5038.

The Civil Aeronautics Board amends 14 CFR Part 385, *Delegations and Review of Action Under Delegation; Nonhearing Matters,* as follows:

1. The authority for Part 385 is:

Authority: Sec. 204(a), 1001, Pub. L. 85-726, as amended, 72 Stat. 743, 788, 49 U.S.C. 1324(a), 1481; Reorganization Plan No. 3 of 1961, 75 Stat. 837, 26 FR 5989, 49 U.S.C. 1324 (note), unless otherwise noted.

2. Section 385.15, *Delegation to the Chief, Tariffs Division, Bureau of Pricing and Domestic Aviation,* is retitled, the opening sentence is revised, and a new paragraph (k) is added, so that the section reads:

§ 385.15 Delegation to the Chief, Tariffs Division, Bureau of Domestic Aviation.

The Board delegates to the Chief, Tariffs Division, Bureau of Domestic Aviation, the authority to:

* * * * *

(k) Approve or deny applications for Special Tariff Permission filed under § 221.195 of this chapter to allow carriers to provide reduced passenger fares before filing a tariff.

By the Civil Aeronautics Board.

Phyllis T. Kaylor,

Secretary.

[FR Doc. 80-40075 Filed 12-30-80; 8:45 am]

BILLING CODE 6320-01-M

---

14 CFR Part 221

[Order 80-12-93]

Special Tariff Permission; Blanket Exemption

AGENCY: Civil Aeronautics Board.

ACTION: Order 80-12-93 granting Blanket Exemption.

SUMMARY: By this exemption, the Board is relaxing its Special Tariff Permission procedures, which require an airline to notify competitors and civic parties in certain cases. The Board takes this action while a rulemaking is in progress to reduce the anti-competitive effect of this notice requirement and to reduce the costs to the airlines and travelers when fare decreases are delayed.

DATES: Effective: December 18, 1980.

FOR FURTHER INFORMATION CONTACT: Thomas Moore, Domestic Fares and Rates Division, Bureau of Domestic Aviation, Civil Aeronautics Board, 1825 Connecticut Avenue, N.W., Washington, D.C. 20428; 202-673-5038.

SUPPLEMENTARY INFORMATION: Section 221.191(e) of the Board's rules requires an air carrier to notify competitors and affected civic parties when the carrier files an application for Special Tariff Permission—

to offer passenger fares that would be outside a statutory zone of reasonableness, or to file any tariff that the carrier believes is likely to be controversial. (14 CFR 221.191(e))

Notification is required for any fare outside the applicable statutory zone of fare flexibility, even if it is within the broader Board-established flexibility zones. Since the burden and anticompetitive effects of the notice requirement outweigh its benefits in such cases, the Board is proposing in EDR-418, issued along with this order, to amend § 221.191(e) to refer to a "Board-established" instead of "statutory" zone. Also, the reference to

controversial filings would be changed to reflect the Board's interpretation that price decreases are not "controversial." As amended, the section would require notice—

(1) To offer passenger fares that would be outside a Board-established zone of fare flexibility or, in markets for which the Board has not established such a zone, outside the statutory zone of fare flexibility; or

(2) To file any price increase or rule change that the carrier believes is likely to be controversial.

This order grants a blanket exemption from § 221.191(e) to all air carriers and foreign air carriers, to the extent that the existing requirement is stricter than the proposed requirement. In view of the burdens and anticompetitive effects of enforcing the requirement with respect to fare increases that are within the Board's zones of fare flexibility, along with our continuing ability to preserve procedural fairness by requiring notice in individual cases, we find that this exemption is in the public interest.

Accordingly,

1. All air carriers and foreign air carriers are hereby exempted from the notification requirement of 14 CFR 221.191(e), to the extent that that requirement is stricter than the requirement proposed in EDR-418, Docket 39076.

2. This exemption will terminate upon final Board action in Docket 39076..

By the Civil Aeronautics Board.

Phyllis T. Kaylor,

Secretary.

[FR Doc. 80-40399 Filed 12-30-80; 8:45 am]

BILLING CODE 6320-01-M

CIVIL AERONAUTICS BOARD

14 CFR Part 221

[EDR-418; Docket 39076]

Special Tariff Permission; Fare Changes

Dated: December 18, 1980.

AGENCY: Civil Aeronautics Board.

ACTION: Notice of proposed rulemaking.

SUMMARY: Under Special Tariff Permission procedures, the CAB allows airlines to implement certain fare changes quickly instead of having to wait 30 to 60 days. This notice proposes to relax the requirement that an airline notify competitors and civic parties in certain cases when it requests Special Tariff Permission. An accompanying order exempts airlines from the requirement while the rulemaking is in progress. This action is at the CAB's initiative.

DATES: Comments by: February 23, 1981.

Comments and other relevant information received after this date will be considered by the Board only to the extent practicable.

Requests to be put on the Service List by: January 5, 1981.

The Docket Section prepares the Service List and sends it to each person listed who then serves his comments on others on the list.

ADDRESSES: Twenty copies of comments should be sent to Docket 39076, Civil Aeronautics Board, 1825 Connecticut Avenue, NW., Washington, D.C. 20428. Individuals may submit their views as consumers without filing multiple copies. Copies may be examined in Room 711, Civil Aeronautics Board, 1825 Connecticut Avenue, NW., Washington, D.C. as soon as they are received.

FOR FURTHER INFORMATION CONTACT: Thomas Moore, Domestic Fares & Rates Division, Bureau of Domestic Aviation, Civil Aeronautics Board, 1825 Connecticut Avenue, NW., Washington, D.C. 20428; 202-673-5038.

SUPPLEMENTARY INFORMATION: An airline that obtains Special Tariff Permission (STP) from the Board can then implement certain passenger fare changes as little as 1 day after it files a tariff reflecting the changes with the Tariffs Division. In ER-1171 and PS-91 (45 FR 20059, 20071, March 27, 1980), the Board liberalized its rules and policies on this subject so that STP requests will ordinarily be approved for fares that are within a statutory or Board-established zone of fare flexibility. In ER-1205, also issued today, the Board adopted a procedure for pre-filing tariff approval to further expedite the introduction of fare decreases. That procedure applies only to domestic fares.

The statutory fare flexibility zones are prescribed domestically by the Airline Deregulation Act of 1978, Pub. L. 95-504, and internationally by the International Air Transportation Competition Act, Pub. L. 96-192. The Board has only limited authority to suspend fares that are within those zones. As a policy matter, the Board has voluntarily established broader zones of flexibility within which it will ordinarily not suspend fares—for most domestic markets in Subpart C of 14 CFR Part 399 (most recently amended by PS-98, 45 FR 70431, October 24, 1980), and for international markets in Order 80-5-139, May 20, 1980.

This notice of proposed rulemaking addresses the notification that airlines must give when they file an STP request with the Board. Once a fare change has become effective, the Board has no authority to suspend it, except in the case of certain international fares. Potential complainants therefore have an interest in being notified about an STP application quickly, so that they may file complaints and argue that a proposed fare should be suspended before the application is approved and the fare implemented. In deciding when to require notification, the Board must balance this interest against several factors. First, any advance notice requirement has an anticompetitive effect, which encourages price leadership and discourages the introduction of fare decreases. Second, there are costs imposed on travelers when fare decreases are delayed, and costs on airlines when increases are delayed. Finally, the notification requirement itself imposes costs on airlines. The balancing is also affected by the likelihood that the Board would suspend the fare. If we had absolutely no authority to suspend, for example, then notification would serve no regulatory purpose.

In ER-1171 we balanced these factors and adopted the following scheme: Notification must be provided for fares that are outside the statutory zones of flexibility, and for any fare that an airline has reason to believe will be controversial (§ 221.191(e)). The notification must be provided to competing airlines and affected civic parties at the same time the STP application is filed with the Board. It must be immediate and telegraphic, unless an alternative is approved by the Board's Tariffs Division. The notification is required for any fare that is outside the applicable statutory zone, even if it is within a Board-established zone of flexibility.

We now propose to amend § 221.191(e) to refer to the Board's broader flexibility zones, except in the few markets for which the Board has not established such zones. In view of all the factors discussed above, especially the rarity of suspensions of filings within these broader zones, any benefits of requiring notification for all such filings are outweighed by the costs and anticompetitive effects. In any event, since granting STP is discretionary, we can protect procedural fairness by requiring notification in individual cases when it appears that a complainant might persuade us to suspend a fare. Also, notification would still be required for controversial filings. This requirement would be restated to reflect our interpretation in ER-1205 of "controversial" as not covering fare decreases—by referring to increases and rule changes instead of all tariffs—and extend that interpretation to cargo rate decreases.

In Order 80-12-93, also adopted today, we are granting a blanket interim exemption from the notification requirement to the extent that this notice proposes to relax the requirement.

Accordingly, the Civil Aeronautics Board proposes to amend 14 CFR Part 221, *Tariffs*, as follows:

In § 221.191, paragraph (e) would be revised to read:

§ 221.191 How to prepare and file applications for Special Tariff Permission.

* * * * *

(e) *When notice is required.* Notice in the manner set forth in paragraph (f) of this section is required when a carrier files an application for Special Tariff Permission—

(1) To offer passenger fares that would be outside a Board-established zone of fare flexibility or, in markets for which the Board has not established such a zone, outside the statutory zone of fare flexibility; or

(2) To file any price increase or rule change that the carrier believes is likely to be controversial.

* * * * *

(Secs. 102, 204, 401, 402, 403, 404, 411, 416, 1001, 1002, as amended, Pub. L. 85-726, 72 Stat. 740, 743, 754, 757, 758, 760, 769, 771, 788; 49 U.S.C. 1302, 1324, 1371, 1372, 1373, 1374, 1381, 1386, 1481, 1482)

By the Civil Aeronautics Board.

Phyllis T. Kaylor,

Secretary.

[FR Doc. 80-40190 Filed 12-30-80; 8:45 am]

BILLING CODE 6320-01-M