7-18-84
Vol. 49 No. 139
Pages 29051-29208

federal register

Wednesday
July 18, 1984

Selected Subjects

Air Pollution Control
Environmental Protection Agency

Aliens
Immigration and Naturalization Service

Animal Drugs
Food and Drug Administration

Authority Delegations (Government Agencies)
Agriculture Department

Aviation Safety
Federal Aviation Administration

Marketing Agreements
Agricultural Marketing Service

Milk Marketing Orders
Agricultural Marketing Service

Occupational Safety and Health
Occupational Safety and Health Administration

Pesticides and Pests
Environmental Protection Agency

Radio and Television Broadcasting
Federal Communications Commission

Reporting and Recordkeeping Requirements
Federal Deposit Insurance Corporation

Superfund
Environmental Protection Agency

Veterans
Veterans Administration

FEDERAL REGISTER Published daily, Monday through Friday, (not published on Saturdays, Sundays, or on official holidays), by the Office of the Federal Register, National Archives and Records Service, General Services Administration, Washington, D.C. 20408, under the Federal Register Act (49 Stat. 500, as amended; 44 U.S.C. Ch. 15) and the regulations of the Administrative Committee of the Federal Register (1 CFR Ch. I). Distribution is made only by the Superintendent of Documents, U.S. Government Printing Office, Washington, D.C. 20402.

The Federal Register provides a uniform system for making available to the public regulations and legal notices issued by Federal agencies. These include Presidential proclamations and Executive Orders and Federal agency documents having general applicability and legal effect, documents required to be published by Act of Congress and other Federal agency documents of public interest. Documents are on file for public inspection in the Office of the Federal Register the day before they are published, unless earlier filing is requested by the issuing agency.

The Federal Register will be furnished by mail to subscribers for $300.00 per year, or $150.00 for six months, payable in advance. The charge for individual copies is $1.50 for each issue, or $1.50 for each group of pages as actually bound. Remit check or money order, made payable to the Superintendent of Documents, U.S. Government Printing Office, Washington D.C. 20402.

There are no restrictions on the republication of material appearing in the Federal Register.

Questions and requests for specific information may be directed to the telephone numbers listed under INFORMATION AND ASSISTANCE in the READER AIDS section of this issue.

Contents

Federal Register
Vol. 49, No. 139
Wednesday, July 18, 1984

The President
PROCLAMATIONS
29051 Captive Nations Week (Proc. 5223)

Executive Agencies

Agricultural Marketing Service
PROPOSED RULES
Milk marketing orders:
29100 Middle Atlantic
29071 Oranges (navel) grown in Arizona and California

Agriculture Department
See also Agricultural Marketing Service; Forest Service.
RULES
Organization, functions, and authority delegations:
29053 Agricultural Marketing Service Administrator, et al., functions transferred from Agriculture Department
NOTICES
29116 Agency information collection activities under OMB review

Arts and Humanities, National Foundation
NOTICES
Meetings:
29168 Humanities National Council Advisory Committee

Commerce Department
See Foreign-Trade Zones Board; International Trade Administration; National Oceanic and Atmospheric Administration.

Defense Department
NOTICES
29123 Personal property program, international through government bill of lading; review of comments
29123 Privacy Act; computer matching program

Economic Regulatory Administration
NOTICES
Disallowance orders:
29125 Murphy Oil Corp.

Energy Department
See also Economic Regulatory Administration; Federal Energy Regulatory Commission.
NOTICES
International atomic energy agreements; civil uses; subsequent arrangements:
29124 Canada and European Atomic Energy Community
29124, 29125 European Atomic Energy Community (2 documents)

Environmental Protection Agency
RULES
Pesticides; tolerances in food:
29056 Benomyl; correction
Superfund programs:
29192 National oil and hazardous substances contingency plan
Toxic substances:
29056 Polychlorinated biphenyls (PCBs); manufacturing and processing, etc.; definitions; correction
29056 Polychlorinated biphenyls (PCBs); manufacturing, processing, etc. incorporation by reference; test method
PROPOSED RULES
Air quality implementation plans; approval and promulgation; various States:
29108 Michigan
Pesticide chemicals in or on raw agricultural commodities; tolerances and exemptions, etc.:
29111 0,0-diethyl 0-(2-Isopropyl-6-Methyl-4-Pyrimidinyl) phosphorothioate
29113 Methylnaphtalene sulfonic acid-formaldehyde condensate
29110 Methyl parathion
29112 Permethrin
29114 Sodium metabisulfite
NOTICES
Air quality; prevention of significant deterioration (PSD):
29142 Permit approvals
Pesticide, food, and feed additive petitions:
29134 ICI Americas, Inc., et al.
29134 Mobay Chemical Corp.
Pesticide programs:
29136 Daminozide; special review
Pesticide registration, cancellation, etc.:
29130 ICI Americas, Inc.
29131 Planavin 75 Herbicide Wettable Powder, etc.
Pesticides; temporary tolerances:
29132 American Cyanamid Co.
29132 E.I. du Pont de Nemours & Co.
29133 Fluridone
29135 Mobay Chemical Corp. (2 documents)
29136 Sandoz Co.
Water pollution; discharge of pollutants (NPDES):
29141 Arizona
Water pollution control:
29142 Disposal site area; final determination; M. A. Norden Site, Mobile, AL

Federal Aviation Administration
RULES
Airworthiness directives:
29054 Bell
29054 Societe Nationale Industrielle Aerospatiale
PROPOSED RULES
29105 Control areas

Federal Communications Commission
RULES
Radio and television broadcasting:
29067 Oversight; update clarifications, editorial corrections, etc.

Federal Deposit Insurance Corporation
RULES
Practice and procedure rules:
29053 Deposits placed by deposit brokers and financial institutions; reporting requirements; interim
NOTICES
29188, 29189 Meetings; Sunshine Act (5 documents)

Federal Energy Regulatory Commission
RULES
Practice and procedure:
29055 Wholesale electric rate cases; reconsideration of decisions
NOTICES
Hearings, etc..
29125 Bayou Interstate Pipeline Corp.
29126 Columbia Gas Transmission Corp. et al.
29126 Connecticut Light & Power Co.
29127 Duke Power Co.
29127 Mineral Resources, Inc., et al.
29129 Pacific Power & Light Co.
29129, 29130 Tampa Electric Co. (2 documents)
29130 Utah Power & Light Co.
Natural gas companies:
29127 Certificates of public convenience and necessity; applications, abandonment of service and petitions to amend

Federal Highway Administration
NOTICES
Environmental statements; availability, etc..
29185 Clackamas County, OR; intent to prepare

Federal Maritime Commission
NOTICES
29189 Meetings; Sunshine Act

Federal Reserve System
NOTICES
Bank holding company applications, etc..
29143 First Bancorporation et al.
29189 Meetings; Sunshine Act

Food and Drug Administration
RULES
Animal drugs, feeds, and related products:
29057 Lasalocid
29056 Sulfamethazine sustained-release boluses
NOTICES
Meetings:
29154 Advisory committees, panels, etc.

Foreign-Trade Zones Board
NOTICES
Applications, etc..
29116 Washington

Forest Service
NOTICES
Meetings:
29116 Uinta National Forest Grazing Advisory Board

General Services Administration
NOTICES
29143 National Environmental Policy Act; implementation

Health and Human Services Department
See Food and Drug Administration; Social Security Administration.

Immigration and Naturalization Service
PROPOSED RULES
29104 Aliens arriving by civil aircraft; designation of ports of entry; liability for inspectional overtime

Indian Affairs Bureau
NOTICES
Judgments funds; plan for use and distribution:
29155 Sisseton-Wahpeton Sioux Tribe

Interior Department
See Indian Affairs Bureau; Land Management Bureau; Minerals Management Service.

International Trade Administration
NOTICES
Countervailing duties:
29117 Portland hydraulic cement from Costa Rica
29118 Motor Vehicle manufacturers; U.S. and Canadian trade; list
Scientific articles; duty free entry:
29117 Duke University Medical Center; withdrawn
29117 New York University Medical Center
29117 University of California

International Trade Commission
NOTICES
29158 Agency information collection activities under OMB review
Import investigations:
29159 Amorphous metals and articles
29160 Compound action metal cutting snips and components
29160 Cut-to-length carbon steel plate from West Germany
29166 Indomethacin
29166 Large video matrix display systems and components
29161 Metal and wire shelf products
29161 Nonrubber footwear
29166 Plastic food storage containers
29162 Portable electronic calculators
29163 Red raspberries from Canada
29167 Rotary wheel printing systems
29164 Shearing machines
29167 Titanium sponge from Japan and United Kingdom
29164 Trolley wheel assemblies
29165 Valves (3 documents)
29166 Vinyl-covered foam blocks (2 documents)
29190 Meetings; Sunshine Act (2 documents)

Interstate Commerce Commission
NOTICES
Rail carriers; state intrastate rail rate authority:
29168 New Hampshire

Justice Department
See also Immigration and Naturalization Service.
NOTICES
Organization, functions, and authority delegations:
U.S. Attorneys et al., tax-related search warrants (Editorial Note: This document appearing at page 28774 in the Federal Register of July 16, 1984, was listed incorrectly under Internal Revenue Service in the table of contents.)

Labor Department
See Occupational Safety and Health Administration.

Land Management Bureau
NOTICES
Environmental statements; availability, etc.:
29157, 29158 Big Sandy Management Framework Plan, WY (2 documents)
Hydrocarbon lease sale:
29156 Utah
Meetings:
29157 Winnemucca District Grazing Advisory Board
Recreation management restriction, etc..
29156 Yuma District, AZ, et al.
Sale of public lands:
29155 Idaho
Small holding claims cancellation:
29157 New Mexico
Withdrawal and reservation of lands:
29157 Wyoming; correction

Merit Systems Protection Board
NOTICES
29168 Digest, availability; call for riders to printing requisition

Minerals Management Service
NOTICES
Environmental statements; availability, etc.:
29158 Gulf of Mexico OCS oil and gas operations

National Oceanic and Atmospheric Administration
NOTICES
Marine mammal permit applications, etc.:
29121 Gilbert, Dr. James R.
29122 St. Louis Zoological Park
Meetings:
29122 Emergency striped bass research study

National Science Foundation
NOTICES
29169 Copyrightable material and income; draft implementing material availability and inquiry

National Transportation Safety Board
NOTICES
29190 Meetings; Sunshine Act

Nuclear Regulatory Commission
NOTICES
Environmental statements; availability, etc..
29169 Northern States Power Co.
Meetings:
29170 Reactor Safeguards Advisory Committee
29170 Regulatory guides; issuance, availability, and withdrawal

Occupational Safety and Health Administration
PROPOSED RULES
Health and Safety standards:
29105 Educational/scientific diving; exemption from commercial diving operations regulations; guidelines, etc.

Personnel Management Office
NOTICES
Meetings:
29171 Federal Prevailing Rate Advisory Committee

Postal Rate Commission
NOTICES
Mail classification schedules:
29171 Special fourth-class mail; prehearing conference rescheduled

Research and Special Programs Administration
NOTICES
Hazardous materials:
29186 Applications; exemptions, renewals, etc.

Securities and Exchange Commission
NOTICES
29176 Agency information collection activities under OMB review
Hearings, etc.:
29176 American Growth Fund, Inc.
29177 American Southwest Financial Corp. et al.
29178 Capital Southwest Corp.
29180 Homewood Finance Corp.
29181 Investment Trust of Boston et al.
29171 Louisiana Power & Light Co.
29172 New England Electric System
Self-regulatory organizations; proposed rule changes:
29172, 29182, 29183 American Stock Exchange, Inc. (3 documents)
29173, 29174 Chicago Board Options Exchange, Inc. (2 documents)
29175 National Association of Securities Dealers, Inc.
29185 Philadelphia Stock Exchange, Inc.
Self-regulatory organizations; unlisted trading privileges:
29176 Cincinnati Stock Exchange
29176 Midwest Stock Exhange, Inc.
29185 Philadelphia Stock Exchange, Inc.

Social Security Administration
NOTICES
29154 Organization, functions, and authority delegations

Textile Agreements Implementation Committee
NOTICES
Textile consultation; review of trade:
29122 China; correction
29122 Hong Kong
29123 Taiwan

Transportation Department
See Federal Aviation Administration; Federal Highway Administration; Research and Special Programs Administration.

Veterans Administration
RULES
Vocational rehabilitation and education:
29058 Emergency veteran's job training program
NOTICES
29187 Agency information collection activities under OMB review

Separate Parts in this Issue

Part II
29192 Environmental Protection Agency

Reader Aids

Additional information, including a list of public laws, telephone numbers, and finding aids, appears in the Reader Aids section at the end of this issue.

CFR PARTS AFFECTED IN THIS ISSUE

A cumulative list of the parts affected this month can be found in the Reader Aids section at the end of this issue.

3 CFR
Proclamations:
5223 29051

7 CFR
2 29053
Proposed Rules:
907 29071
908 29071
1004 29100

8 CFR
Proposed Rules:
239 29104

12 CFR
304 29053

14 CFR
39 (2 documents) 29054
Proposed Rules:
71 29105

18 CFR
385 29055

21 CFR
193 29056
520 29056
556 29057
558 29057

29 CFR
Proposed Rules:
1910 29105

38 CFR
21 29058

40 CFR
300 29192
761 (2 documents) 29066
Proposed Rules:
52 29108
180 (5 documents) 29110–29114

47 CFR
13 29067
73 29067
74 29067

Federal Register
Vol. 49, No. 139
Wednesday, July 18, 1984

Presidential Documents

Title 3—

The President

Proclamation 5223 of July 16, 1984

Captive Nations Week, 1984

By the President of the United States of America

A Proclamation

Once each year, all Americans are asked to pause and to remember that their liberties and freedoms, often taken for granted, are forbidden to many nations around the world. America continues to be dedicated to the proposition that all men are created equal. If we are to sustain our commitment to this principle, we must recognize that the peoples of the Captive Nations are endowed by the Creator with the same rights to give their consent as to who shall govern them as those of us who are privileged to live in freedom. For those captive and oppressed peoples, the United States of America stands as a symbol of hope and inspiration. This leadership requires faithfulness towards our own democratic principles as well as a commitment to speak out in defense of mankind's natural rights.

Though twenty-five years have passed since the original designation of Captive Nations Week, its significance has not diminished. Rather, it has undeniably increased—especially as other nations have fallen under Communist domination. During Captive Nations Week we must take time to remember both the countless victims and the lonely heroes; both the targets of carpet bombing in Afghanistan, and individuals such as imprisoned Ukrainian patriot Yuriy Shukhevych. We must draw strength from the actions of the millions of freedom fighters in Communist-occupied countries, such as the signers of petitions for religious rights in Lithuania, or the members of Solidarity, whose public protests require personal risk and sacrifice that is almost incomprehensible to the average citizen in the Free World. It is in their struggle for freedom that we can find the true path to genuine and lasting peace.

For those denied the benefits of liberty we shall continue to speak out for their freedom. On behalf of the unjustly persecuted and falsely imprisoned, we shall continue to call for their speedy release and offer our prayers during their suffering. On behalf of the brave men and women who suffer persecution because of national origin, religious beliefs, and their desire for liberty, it is the duty and the privilege of the United States of America to demand that the signatories of the United Nations Charter and the Helsinki Accords live up to their pledges and obligations and respect the principles and spirit of those international agreements and understandings.

During Captive Nations Week, we renew our efforts to encourage freedom, independence, and national self-determination for those countries struggling to free themselves from Communist ideology and totalitarian oppression, and to support those countries which today are standing face-to-face against Soviet expansionism. One cannot call for freedom and human rights for the people of Asia and Eastern Europe while ignoring the struggles of our own neighbors in this hemisphere. There is no difference between the weapons used to oppress the people of Laos and Czechoslovakia, and those sent to Nicaragua to terrorize its own people and threaten the peace and prosperity of its neighbors.

The Congress, by joint resolution approved July 17, 1959 (73 Stat. 212), has authorized and requested the President to designate the third week in July as "Captive Nations Week."

NOW, THEREFORE, I, RONALD REAGAN, President of the United States of America, do hereby proclaim the week beginning July 15, 1984, as Captive Nations Week. I invite the people of the United States to observe this week with appropriate ceremonies and activities to reaffirm their dedication to the international principles of justice and freedom, which unite us and inspire others.

IN WITNESS WHEREOF, I have hereunto set my hand this 16th day of July, in the year of our Lord nineteen hundred and eighty-four, and of the Independence of the United States of America the two hundred and ninth.

Ronald Reagan

[FR Doc. 84-19190
Filed 7-17-84; 10:41 am]
Billing code 3195-01-M

Editorial note: For the President's remarks of July 16, 1984, on signing Proclamation 5223, see the *Weekly Compilation of Presidential Documents* (vol. 20, no. 29).

Rules and Regulations

Federal Register
Vol. 49, No. 139
Wednesday, July 18, 1984

This section of the FEDERAL REGISTER contains regulatory documents having general applicability and legal effect, most of which are keyed to and codified in the Code of Federal Regulations, which is published under 50 titles pursuant to 44 U.S.C. 1510.
The Code of Federal Regulations is sold by the Superintendent of Documents. Prices of new books are listed in the first FEDERAL REGISTER issue of each week.

DEPARTMENT OF AGRICULTURE

Office of the Secretary

7 CFR Part 2

Revision of Delegation of Authority

AGENCY: Office of the Secretary, USDA.

ACTION: Final rule.

SUMMARY: This document revises the delegation of authority from the Secretary of Agriculture and general officers of the Department to reflect the transfer of management support functions for the Agricultural Marketing Service (AMS), Federal Grain Inspection Service (FGIS), the Agricultural Cooperative Service (ACS), the Office of Transportation (OT), and the Packers and Stockyards Administration (P&SA) from the Administrator, Agricultural Marketing Service, to the Administrator, Animal and Plant Health Inspection Service (APHIS).

EFFECTIVE DATE: July 18, 1984.

FOR FURTHER INFORMATION CONTACT: William E. Havens, Program Manager, Classification, Employment, and Executive Resources Programs, Human Resources Division, APHIS, United States Department of Agriculture, Rm. 221, Federal Building, 6505 Belcrest Road, Hyattsville, MD 20782 (301-436-6466).

SUPPLEMENTARY INFORMATION: This document removes the delegation of authority from the Administrator, AMS, to provide management support services for the FGIS, OT, ACS and the P&SA. Such functions will hereafter be provided by the Administrator, APHIS.

This rule relates to internal agency management. Therefore, pursuant to 5 U.S.C. 553, it is found upon good cause that notice and other public procedures with respect thereto are impractical and contrary to the public interest, and good cause is found for making this rule effective less than 30 days after publication in the Federal Register.

Further, since this rule relates to internal agency management, it is exempt from the provision of E.O. 12291. Finally, this action is not a rule as defined by Pub. L. 96-354, the Regulatory Flexibility Act, and thus is exempt from the provisions of that Act.

List of Subjects in 7 CFR Part 2

Authority delegations—Government agencies.

PART 2—DELEGATIONS OF AUTHORITY BY THE SECRETARY OF AGRICULTURE AND GENERAL OFFICERS OF THE DEPARTMENT

Accordingly, 7 CFR Part 2 is amended as follows:

1. The authority citation for Part 2 reads as follows:

Authority: 5 U.S.C. 301 and Reorganization Plan No. 2 of 1953, except as otherwise noted.

2. Section 2.50 is amended by removing and reserving paragraph (a)(8) as follows:

§ 2.50 Administrator, Agricultural Marketing Service.

(a) * * *

(8) [Reserved]

* * * * *

3. Section 2.51 is amended by adding a new paragraph (a)(39) to read as follows:

§ 2.51 Administrator, Animal and Plant Health Inspection Service.

(a) * * *

* * * * *

(39) Provide management support services for the Federal Grain Inspection Service, the Office of Transportation, the Agricultural Cooperative Service, the Packers and Stockyards Administration, and the Agricultural Marketing Service as agreed upon by the agencies with authority to take actions required by law or regulation. As used herein, the term management support services includes budget, finance, personnel, procurement, propoerty management, communications, paperwork management, and related administrative services.

* * * * *

Dated: July 9, 1984.

C. W. McMillan,

Assistant Secretary for Marketing and Inspection Services.

[FR Doc. 84-18929 Filed 7-17-84; 8:45 am]
BILLING CODE 3410-01-M

FEDERAL DEPOSIT INSURANCE CORPORATION

12 CFR Part 304

Reporting Requirements on Deposit Placed by Deposits Brokers and Financial Institutions

AGENCY: Federal Deposit Insurance Corporation.

ACTION: Interim final rule amendments.

SUMMARY: The Office of Management and Budget has reviewed and approved the reporting requirements contained in the interim final regulation adopted by the Federal Deposit Insurance Corporation ("FDIC") and published as FR Doc. 84-17974 beginning on page 27487 in the issue of Thursday, July 5, 1984, as an addition to Part 304 of FDIC's rules and regulations, "Forms, Instructions, and Reports." 12 CFR Part 304. The regulation requires each FDIC-insured bank with combined brokered deposits and fully insured deposits of financial institutions in excess of either the bank's total capital and reserves or five percent of the bank's total deposits to report holdings of such deposits to the FDIC for every month in which such excess exists. The report has been assigned OMB Control No. 3064-0074 which expires January 31, 1985. This amendment incorporates the OMB control number and expiration date within § 304.4 of FDIC's interim final regulation.

EFFECTIVE DATE: August 6, 1984, with the first required filing, if applicable, within ten days after July 31, 1984. Comments must be received by September 4, 1984.

ADDRESS: Comments should be directed to Hoyle L. Robinson, Executive Secretary, Federal Deposit Insurance Corporation, 550 17th Street, NW., Washington, D.C. 20429. Comments may be delivered to Room 6108 on weekdays between 8:30 a.m. and 5:00 p.m.

FOR FURTHER INFORMATION CONTACT: Robert F. Storch, Examination Specialist, or Jesse G. Snyder, Assistant Director, Federal Deposit Insurance

Corporation, Division of Bank Supervision, (202) 389-4761 or 389-4141, 550-17th Street NW., Washington, D.C. 20409.

List of Subjects in 12 CFR Part 304

Administrative practice and procedure, Bank deposit insurance, Banks, banking; Foreign banks, Banking, Reporting and recordkeeping requirements.

Accordingly, the FDIC hereby amends Part 304 of the CFR as set forth below.

PART 304—FORMS, INSTRUCTIONS AND REPORTS

1. The authority citation for Part 304 reads as follows:

Authority: 12 U.S.C. 1817, 1818, 1819, 1920.

§ 304.4 [Amended]

2. Section 304.4(d) is added as follows:

* * * * *

(d) *OMB Review.* The Office of Management and Budget has reviewed and approved the reporting requirements contained in this § 304.4. (OMB Control No. 3064-0074 which expires January 31, 1985.)

Dated: July 13, 1984.

Federal Deposit Insurance Corporation.

Hoyle Robinson,

Executive Secretary.

[FR Doc. 84-19059 Filed 7-17-84; 8:45 am]

BILLING CODE 6714-01-M

DEPARTMENT OF TRANSPORTATION

Federal Aviation Administration

14 CFR Part 39

[Docket No. 82-ASW-78; Amdt. 39-4884]

Airworthiness Directives; Bell Helicopter Textron, Inc., Model 214ST Helicopters

AGENCY: Federal Aviation Administration (FAA), DOT.

ACTION: Final rule.

SUMMARY: This amendment revises an existing airworthiness directive (AD) by changing a repetitive inspection interval from 25 hours to 250 hours. AD 82-26-07 requires modification of the upper left-hand longeron fitting installation and repetitive 25-hour visual inspections. Since adoption of the AD, service experience shows that no cracks have been found in modified longeron installations.

DATE: Effective August 17, 1984.

Compliance Schedule—As prescribed in the body of the AD.

ADDRESSES: A copy of the service information is contained in the Rules Docket located at the Office of the Regional Counsel, Southwest Region, Federal Aviation Administration, Room 156, Building 3B, 4400 Blue Mound Road, Fort Worth, Texas 76106.

The applicable service information may be obtained from Bell Helicopter Textron, Inc., Attention: Customer Support, P.O. Box 482, Fort Worth, Texas 76101.

FOR FURTHER INFORMATION CONTACT: H.A. Armstrong, Helicopter Certification Branch, ASW-170, Aircraft Certification Division, Southwest Region, Federal Aviation Administration, P.O. Box 1689, Fort Worth, Texas 76101, telephone number (817) 877-2079.

SUPPLEMENTARY INFORMATION: A proposal to amend Part 39 of the Federal Aviation Regulations, by amending Amendment 39-4512 (47 FR 57258), AD 82-26-07, was published in the Federal Register on April 5, 1984 (49 FR 13545).

Since issuing Amendment 39-4512, the FAA has reviewed Bell Model 214ST service experience. Approximately 380 inspections have been performed on 15 aircraft; no cracks have been found. The longeron modification required by Amendment 39-4512 has provided significant improvement in longeron strength. Because of the critical nature of the part, the inspection requirement is being retained. However, service experience has confirmed that an increase in the number of hours' time in service between repetitive inspections is appropriate. The FAA is therefore amending Amendment 39-4512 by increasing the repetitive inspection interval from 25 to 250 hours for those Bell Model 214ST aircraft that have been modified as required by Amendment 39-4512.

Interested persons have been afforded an opportunity to participate in the making of this amendment. No comments were received. The proposal is adopted without change.

List of Subjects in 14 CFR Part 39

Air transportation, Aircraft, Aviation safety, Safety.

Adoption of the Amendment

Accordingly, pursuant to the authority delegated to me by the Administrator, § 39.13 of Part 39 of the Federal Aviation Regulations (14 CFR 39.13) is amended by amending Amendment 39-4512 (45 FR 57258), AD 82-26-07, by revising paragraph (e) of the amendment to read as follows:

* * * * *

(e) After installation of the longeron modification, conduct the following inspection at intervals not to exceed 250 hours' time in service:

* * * * *

This amendment becomes effective Aug. 17, 1984.

(Secs. 313(a), 601, and 603, Federal Aviation Act of 1958, as amended (49 U.S.C. 1354(a), 1421, and 1423); 49 U.S.C. 106(g) (Revised, Pub. L. 97-449, January 12, 1983); 14 CFR 11.89)

Note.—The FAA has determined that this regulation only involves six U.S. registered aircraft. None of these aircraft is owned or operated by a small entity. This regulation reduces the man-hours required to perform the required repetitive inspections by 90 percent. Therefore, I certify that this action (1) is not a "major rule" under Executive Order 12291; (2) is not a "significant rule" under DOT Regulatory Policies and Procedures (44 FR 11034; February 26, 1979); (3) does not warrant preparation of a regulatory evaluation as the anticipated impact is so minimal; and (4) will not have a significant economic impact on a substantial number of small entities under the criteria of the Regulatory Flexibility Act.

Issued at Fort Worth, Texas, on July 5, 1984.

F.E. Whitfield,

Acting Director.

[FR Doc. 84-18914 Filed 7-17-84; 8:45 am]

BILLING CODE 4910-13-M

14 CFR Part 39

[Docket No. 83-ASW-12; Amdt. 39-4887] 14 CFR Part 39

Airworthiness Directives; Societe Nationale Industrielle Aerospatiale (SNIAS) Model AS350 and AS355 Series Helicopters

AGENCY: Federal Aviation Administration (FAA), DOT.

ACTION: Final rule.

SUMMARY: This amendment amends an existing airworthiness directive (AD) which requires repetitive inspection and repair or replacement, as necessary, of the main rotor mast on Aerospatiale (SNIAS) Model AS350 and AS355 helicopters. This amendment is needed to provide for different inspection requirements for Model AS350 and AS355 helicopters, to provide for differences in operating environments, and to exclude corrosion resistant masts from the AD applicability.

DATES: Effective August 17, 1984.

Compliance schedule—As prescribed in body of AD.

ADDRESSES: The applicable service bulletins may be obtained from Aerospatiale Helicopter Corporation, 2701 Forum Drive, Grand Prairie, Texas 75051, Attention: Customer Support.

A copy of each of the service bulletins is contained in the Rules Docket at the Office of the Regional Counsel, Federal Aviation Administration, 4400 Blue Mound Road, Fort Worth, Texas 76106.

FOR FURTHER INFORMATION CONTACT: Chris Christie, Manager, Aircraft Certification Office, FAA, Europe, Africa, and Middle East Office, c/o American Embassy, Brussels, Belgium, APO NY 09667, telephone number 513.38.30; or R. T. Weaver, Helicopter Policy and Procedures Staff, ASW-111, Federal Aviation Administration, P.O. Box 1689, Fort Worth, Texas 76101, telephone number (817) 877-2548.

SUPPLEMENTARY INFORMATION: A proposal to amend Part 39 of the Federal Aviation Regulations to include an amendment to an airworthiness directive requiring repetitive inspection and repair or replacement, as necessary, of the main rotor masts on certain Aerospatiale Model AS350 and AS355 series helicopters was published in the Federal Register on March 29, 1984.

The proposal was prompted by the FAA determining, based on service experience and fatigue testing, that the repetitive inspection types and intervals required by the AD can be changed to consider differences in operating stresses and environments. Also, the FAA has determined that if a corrosion resistant mast is installed on a Model AS355 helicopter, a service life is not needed. Therefore, the FAA is further amending Amendment 39-4599, as amended, by providing different inspection programs for AS350 and AS355 helicopters, by providing for operations in corrosive environments, and by excluding the corrosion resistant mast from the AD inspection and replacement requirements on Aerospatiale Model AS350 and AS355 helicopters.

Interested persons have been afforded an opportunity to participate in the making of this amendment. No objections were received. Accordingly, the proposal is adopted with only clarifying changes. Paragraph (e) was reorganized and renumbered for clarity, and "nonsaline operations" was changed to "limited saline operations" since some limited saline operations are allowed.

List of Subjects in 14 CFR Part 39

Air transportation, Aircraft, Aviation safety, Safety.

Adoption of the Amendment

Accordingly, pursuant to the authority delegated to me by the Administrator, § 39.13 of Part 39 of the Federal Aviation Regulations (14 CFR 39.13) is further amended by amending Amendment 39-4599 (48 FR 14351), AD 83-07-05, as amended by Amendment 39-4698 (48 FR 37924) by revising paragraphs e, f, g, and h, and by adding a new paragraph k as follows:

Aerospatiale Helicopter Corporation: Applies to Aerospatiale Model AS350 and AS355 series helicopters certificated in all categories.

Compliance is required as indicated (unless already accomplished).

* * * * *

e. For AS355 helicopters (within 10 hours' time in service from the effective date of this amended AD, unless already accomplished):

(1) Repeat the inspections of paragraph d of this AD at intervals not to exceed 300 hours' time in service from the last paragraph d inspection.

(2) Visually inspect the upper mast flange-to-shaft radius at intervals not to exceed 50 hours' time in service from last inspection. Inspect for finish deterioration, corrosion, or cracks. Use a 10-power glass in areas of suspected surface finish cracks. Conduct magnetic particle or dye penetrant inspections, in accordance with paragraph d(2) of this AD, of all areas where finish deterioration is found.

(3) For AS355 helicopters in limited saline operations with masts which have accumulated 450 hours' or more total time in service reduce the repetitive visual inspection interval of paragraph e(2) from 50 hours to 25 hours. To qualify for consideration of limited saline (noncorrosive) environment operations, an individual Model AS355 helicopter mast must meet all the following criteria:

(i) It must not be operated over salt water for a major part (in excess of 50 percent) of any month.

(ii) It must not have a total of 300 hours' or more time in service of over salt water operations.

(iii) It must not be installed on a helicopter that had a main rotor mast replaced due to corrosion.

(4) Upon the accumulation of 450 hours total time in service remove from service any main rotor mast which does not qualify for limited saline environment operations in accordance with the requirements of paragraph e(3).

f. For AS350 helicopters (within 10 hours' time in service from the effective date of this AD, unless already accomplished):

(1) Repeat the inspections of paragraph d of this AD at intervals not to exceed 300 hours' time in service from the last paragraph d inspection.

(2) Visually inspect the mast upper flange-to-shaft radius at intervals not to exceed 50 hours' time in service after the last inspection. Inspect for finish deterioration, corrosion, or cracks. Use a 10-power glass in areas of suspected surface finish cracks. Conduct magnetic particle or dye penetrant inspections in accordance with paragraph d(2) of this AD of all areas where finish deterioration is found.

g. Rework corroded masts in accordance with Aerospatiale Service Bulletin Nos. 05.03 or 05.13, dated April 19, 1983, or later FAA-approved equivalent. Replace any masts corroded beyond the allowed rework.

h. Reinstall the main rotor hub in accordance with the appropriate Model AS350 or AS355 Maintenance Manual, or FAA-approved equivalent, after completion of the inspections and rework of paragraphs d, e, f, and g.

* * * * *

k. After the installation of corrosion resistant masts (P/N 350A.37.1076.07), the repetitive inspections and life limits of paragraphs d, e, and f, no longer apply.

This amendment becomes effective August 17, 1984.

This amendment further amends Amendment 39-4599 (48 FR 14351), AD 83-07-05, as amended by Amendment 39-4698 (48 FR 37924).

(Sec. 313(a), 601, and 603, Federal Aviation Act of 1958, as amended (49 U.S.C. 1354(a), 1421, and 1423); 49 U.S.C. 106(g) (Revised, Pub. L. 97-449, January 12, 1983); 14 CFR 11.89)

Note: The FAA has determined that this regulation only involves 141 aircraft, makes only minimal changes to inspection requirements and provides for use of a new corrosion resistant mast. Therefore, I certify that this action (1) is not a "major rule" under Executive Order 12291; (2) is not a "significant rule" under DOT Regulatory Policies and Procedures (44 FR 11034; February 26, 1979); (3) does not warrant preparation of a regulatory evaluation as the anticipated impact is so minimal; and (4) will not have a significant economic impact on a substantial number of small entities under the criteria of the Regulatory Flexibility Act.

Issued in Fort Worth, Texas, on July 2, 1984.

F.E. Whitfield,

Acting Director, Southwest Region.

[FR Doc. 84-18213 Filed 7-17-84; 8:45 am]

BILLING CODE 4910-13-M

DEPARTMENT OF ENERGY

Federal Energy Regulatory Commission

18 CFR Part 385

[Docket No. RM83-1-001]

Rules of Practice and Procedure; Reconsideration of Initial Decisions

Issued: July 13, 1984.

AGENCY: Federal Energy Regulatory Commission, DOE.

ACTION: Order granting rehearing for purpose of further consideration.

SUMMARY: On May 16, 1984, the Federal Energy Regulatory Commission (Commission) issued a final rule to require, in designated wholesale electric rate cases, the filing of motions for reconsideration of initial decisions as a prerequisite to seeking Commission review of those decisions.

In this order, the Commission grants rehearing of its decision solely for the purpose of further consideration.

EFFECTIVE DATE: July 13, 1984.

FOR FURTHER INFORMATION CONTACT: Elizabeth Withnell, Office of the General Counsel, Rulemaking and Legislative Analysis Division, Federal Energy Regulatory Commission, 825 North Capitol Street, NW., Washington, D.C. 20428, (202) 357-8033).

SUPPLEMENTARY INFORMATION:

Before Commissioners: Raymond J. O'Connor, Chairman; Georgiana Sheldon, A. G. Sousa and Oliver G. Richard III.

On May 16, 1984, the Federal Energy Regulatory Commission (Commission) issued a final rule to require, in designated wholesale electric rate cases, the filing of motions for reconsideration of initial decisions as a prerequisite to seeking Commission review of those decisions. Rules of Practice and Procedure: Reconsideration of Initial Decisions, 49 FR 21,312 (May 21, 1984) (to be codified at 18 CFR 385.717).

On June 15, 1984, the Commission received a timely petition for rehearing of this final rule from Wisconsin Customers. To have sufficient time to consider the issues raised in this petition, the Commission grants rehearing of its final rule solely for the purpose of further consideration. This order is effective on the date of issuance. This action does not constitute a grant or denial of a petition on its merits, either in whole or part. As provided in § 385.713 of the Commission's Rules of Practice and Procedure (18 CFR 385.713), no answers to this petition will be entertained by the Commission because this order does not grant rehearing on any substantive issue.

By the Commission.

Kenneth F. Plumb,

Secretary.

[FR Doc. 84-18997 Filed 7-17-84; 8:45 am]

BILLING CODE 6717-01-M

ENVIRONMENTAL PROTECTION AGENCY

21 CFR Part 193

[FAP 5H5062/R681; FRL-2629-1]

Tolerances for Pesticides in Foods Administered by the Environmental Protection Agency; Benomyl; Correction

AGENCY: Environmental Protection Agency (EPA).

ACTION: Final rule; Correction.

SUMMARY: This document corrects 21 CFR 193.30, which relates to the fungicide benomyl, to add a provision for concentrated tomato products that was inadvertently omitted in a redesignation of the section.

EFFECTIVE DATE: July 18, 1984.

FOR FURTHER INFORMATION CONTACT: John A. Richards, Federal Register Unit (TS-788), Office of Pesticide Programs, Environmental Protection Agency, 401 M St., SW., Washington, D.C. 20460 (202-382-3637).

SUPPLEMENTARY INFORMATION: Section 121.1254 *Benomyl* (21 CFR 121.1254) was amended in the Federal Register of December 18, 1974 (39 FR 43719), to add "concentrated tomato products." Section 121.1254 was redesignated as § 123.30 in the Federal Register of March 28, 1975 (40 FR 14156). The amendment adding concentrated tomato products was not included in the redesignated section of the Code of Federal Regulations (CFR) revised as of April 1, 1975. Section 123.30 was subsequently redesignated as 21 CFR 193.30 in the Federal Register of June 28, 1976 (41 FR 26568). This document corrects § 193.30 by correcting the provision for concentrated tomato products that was inadvertently omitted when the section was redesignated in 1975.

(Sec. 408(d)(2), 68 Stat. 512 (21 U.S.C. 346a(d)(2)))

List of Subjects in 21 CFR Part 193

Food additives, Pesticides and pests.

Dated: June 14, 1984.

Edwin L. Johnson,

Director, Office of Pesticide Programs.

PART 193—[AMENDED]

Therefore, § 193.30 is corrected by reinstating the provision for concentrated tomato products, to read as follows:

§ 193.30 Benomyl.

Tolerances of 50 parts per million are established for combined residues of the fungicide benomyl (methyl-1-(butylcarbamoyl)-2-benzimidazolecarbamate) and its metabolites containing the benzimidazole moiety (calculated as benomyl) in raisins and concentrated tomato products when present therein as a result of application of the fungicide to growing grapes and tomatoes.

[FR Doc. 84-18603 Filed 7-17-84; 8:45 am]

BILLING CODE 6560-50-M

DEPARTMENT OF HEALTH AND HUMAN SERVICES

Food and Drug Administration

21 CFR Part 520

Oral Dosage Form New Animal Drugs Not Subject to Certification; Sulfamethazine Sustained-Release Boluses

AGENCY: Food and Drug Administration.

ACTION: Final rule.

SUMMARY: The Food and Drug Administration (FDA) is amending the animal drug regulations to reflect approval of a supplemental new animal drug application (NADA) filed by International Multifoods Corp. The supplemental application provides for use in ruminating replacement calves of sustained-release boluses containing 8.02 grams of sulfamethazine for the treatment of certain disease conditions.

EFFECTIVE DATE: July 18, 1984.

FOR FURTHER INFORMATION CONTACT: Charles E. Haines, Center for Veterinary Medicine (HFV-133), Food and Drug Administration, 5600 Fishers Lane, Rockville, MD 20857, 301-443-3410.

SUPPLEMENTARY INFORMATION: International Multifoods Corp., Multifoods Tower, Box 2942, 8th & Marquette Sts., Minneapolis, MN 55402, filed a supplement to NADA 120-615 providing for use in calves of a sulfamethazine sustained-release bolus containing 8.02 grams of sulfamethazine for the treatment of certain disease conditions caused by organisms sensitive to sulfamethazine. The basis for approval of this supplement is discussed in the freedom of information summary. Based on the data and information submitted, the supplement is approved and the regulations are amended to reflect the approval.

In accordance with the freedom of information provisions of Part 20 (21 CFR Part 20) and § 514.11(e)(2)(ii) (21 CFR 514.11(e)(2)(ii)), a summary of safety and effectiveness data and information submitted to support approval of this application may be seen in the Dockets Management Branch (HFA-305), Food and Drug Administration, Rm. 4-62, 5600 Fishers Lane, Rockville, MD 20857, from 9 a.m. to 4 p.m., Monday through Friday.

The Center for Veterinary Medicine has determined pursuant to 21 CFR 25.24(d)(1)(i) (proposed December 11, 1979; 44 FR 71742) that this action is of a type that does not individually or cumulatively have a significant impact on the human environment. Therefore, neither an environmental assessment nor an environmental impact statement is required.

List of Subjects in 21 CFR Part 520

Animal drugs, oral use.

Therefore, under the Federal Food, Drug, and Cosmetic Act (sec. 512(i), 82 Stat. 347 (21 U.S.C. 360b(i))) and under authority delegated to the Commissioner of Food and Drugs (21 CFR 5.10) and redelegated to the Center for Veterinary Medicine 21 CFR 5.83), Part 520 is amended in §520.2260b by adding new paragraph (e) to read as follows:

PART 520—ORAL DOSAGE FORM NEW ANIMAL DRUGS NOT SUBJECT TO CERTIFICATION

§ 520.2260b Sulfamethazine sustained-release boluses.

* * * * *

(e)(1) *Sponsor.* See No. 012518 in § 510.600(c) of this chapter for use of an 8.02-gram sulfamethazine sustained-release bolus.

(2) *Conditions of use*—(i) *Amount.* Administer 2 boluses (8.02 grams per bolus) per 100 pounds of body weight, as a single dose.

(ii) *Indications for use.* Administer orally to ruminating calves for the prolonged treatment of the following diseases when caused by one or more of the listed pathogenic organisms sensitive to sulfamethazine: bacterial pneumonia (*Pasteurella* spp.), colibacillosis (bacterial scours) (*E. coli*), and calf diptheria (*Fusobacterium necrophorum*).

(iii) *Limitations.* For use in ruminating replacement calves only; 72 hours after dosing all animals should be reexamined for persistence of disease signs; if signs are present, consult a veterinarian; do not slaughter animals for food for at least 12 days after the last dose; this product has not been shown to be effective for nonruminating calves; exceeding two consecutive doses may cause violative tissue residue to remain beyond the withdrawal time; do not use in calves under 1 month of age or calves being fed an all milk diet.

Effective date. July 18, 1984.

(Sec. 512(i), 82 Stat. 347 (21 U.S.C. 360b(i)).)

Dated: July 10, 1984.

Marvin A. Norcross,

Acting Associate Director for Scientific Evaluation.

[FR Doc. 84-18320 Filed 7-17-84; 8:45 am]

BILLING CODE 4160-01-M

---

21 CFR Parts 556 and 558

Tolerances for Residues of New Animal Drugs in Food; New Animal Drugs for Use in Animal Feeds; Lasalocid

AGENCY: Food and Drug Administration.

ACTION: Final rule.

SUMMARY: The Food and Drug Administration (FDA) is amending the animal drug regulations to reflect approval of a supplemental new animal drug application (NADA) filed by Hoffmann-La Roche, Inc., providing for no withdrawal period when using lasalocid in medicated chicken feed to prevent certain forms of coccidiosis.

EFFECTIVE DATE: July 18, 1984.

FOR FURTHER INFORMATION CONTACT: Adriano R. Gabuten, Center for Veterinary Medicine (HFV-135), Food and Drug Administration, 5600 Fishers Lane, Rockville, MD 20857, 301-443-4913.

SUPPLEMENTARY INFORMATION: Hoffmann-La Roche, Inc., Nutley, NJ 07110, filed a supplement to NADA 96-298 providing for no withdrawal period when using lasalocid in broiler feeds for prevention of certain forms of coccidiosis. The drug currently requires a 3-day withdrawal period. In addition to the change in withdrawal period, the tolerance is revised to provide for a safe concentration for total residues of lasalocid in muscle of 1.2 parts per million rather than the current 0.05 part per million, as in 21 CFR 556.347. The basis for approval is discussed in the freedom of information summary. The supplement is approved and the regulations are amended accordingly.

In accordance with the freedom of information provisions of Part 20 (21 CFR Part 20) and § 514.11(e)(2)(ii) (21 CFR 514.11(e)(2)(ii)), a summary of safety and effectiveness data and information submitted to support approval of this application may be seen in the Dockets Management Branch (HFA-305), Food and Drug Administration, Rm. 4-62, 5600 Fishers Lane, Rockville, MD 20857, from 9 a.m. to 4 p.m., Monday through Friday.

The Center for Veterinary Medicine has determined pursuant to 21 CFR 25.24(d)(1)(i) (proposed December 11, 1979; 44 FR 71742) that this action is of a type that does not individually or cumulatively have a significant impact on the human environment. Therefore, neither an environmental assessment nor an environmental impact statement is required.

List of Subjects

21 CFR Part 556

Animal drugs, Foods, Residues.

21 CFR Part 558

Animal drugs, Animal feeds.

Therefore, under the Federal Food, Drug, and Cosmetic Act (Sec. 512(i), 82 Stat. 347 (21 U.S.C. 360b(i))) and under authority delegated to the Commissioner of Food and Drugs (21 CFR 5.10) and redelegated to the Center for Veterinary Medicine (21 CFR 5.83), Parts 556 and 558 are amended as follows:

PART 556—TOLERANCES FOR RESIDUES OF NEW ANIMAL DRUGS IN FOOD

1. Part 556 is amended in § 556.347 by revising paragraph (a) to read as follows:

§ 556.347 Lasalocid.

* * * * *

(a) *Chickens.* The marker residue selected to monitor for total residues of lasalocid in chickens is parent lasalocid. The target tissue is skin with adhering fat. A tolerance for the marker is established in chickens of 0.3 part per million for parent lasalocid in skin with adhering fat. A marker residue concentration of 0.3 part per million in skin with adhering fat corresponds to a concentration for total residues of lasalocid of 7.2 parts per million in liver. The safe concentrations for total residues of lasalocid in the uncooked edible tissues of chickens are 1.2 parts per million in muscle, 2.4 parts per million in skin with adhering fat, and 7.2 parts per million in liver.

* * * * *

PART 558—NEW ANIMAL DRUGS FOR USE IN ANIMAL FEEDS

§ 558.311 [Amended]

2. Part 558 is amended in § 558.311 *Lasalocid* in the table in paragraph (f) in items (1) and (4) in the fourth column "Limitations" by removing the phrase "withdraw 3 days before slaughter."

Effective date. July 18, 1984.

(Sec. 512(i), 82 Stat. 347 (21 U.S.C. 360b(i)).)

Dated: July 10, 1984.

Marvin A. Norcross,

Acting Associate Director for Scientific Evaluation.

[FR Doc. 84-18921 Filed 7-17-84; 8:45 am]

BILLING CODE 4160-01-M

VETERANS ADMINISTRATION

38 CFR Part 21

Emergency Veterans' Job Training Program

AGENCY: Veterans' Administration.

ACTION: Final regulations.

SUMMARY: These regulations establish an Emergency Veterans' Job Training Program. The program assists eligible veterans obtain significant training for employment in stable and permanent positions. The VA (Veterans Administration) makes payments to employers who employ and train eligible veterans in these jobs. The payments assist employers in defraying the costs of necessary training. These regulations implement the provisions of the Emergency Veterans' Job Training Act of 1983.

EFFECTIVE DATE: October 1, 1983.

FOR FURTHER INFORMATION CONTACT: June C. Schaeffer (225), Assistant Director for Policy and Program Administration, Education Service, Department of Veterans Benefits, Veterans Administration, 810 Vermont Avenue, NW., Washington, D.C. 20420 (202-389-2092).

SUPPLEMENTARY INFORMATION: On pages 57529 through 57537 of the Federal Register of December 30, 1983, there was published a notice of intent to amend part 21 in order to implement the Emergency Veterans' Job Training Act of 1983 (Pub. L. 98-77).

Interested people were given 30 days in which to submit comments, suggestions or objections. The VA received seven letters containing comments and suggestions. One of these letters included a comment on the regulatory flexibility analysis. One letter was from a labor union, one was from an association of college officials; the remainder were from State and local governmental agencies.

The law and these regulations state that the wages and benefits being paid to a veteran must be comparable to wages and benefits paid to other employees participating in a comparable program of job training. One writer suggested that a comparable program is one which is also funded by the Federal government, such as training programs under the Job Training Partnership Act (JTPA).

The VA has carefully researched the history of Pub. L. 98-77, and can find no indication that the Congress intended the term "comparable program of job training" to be a program funded by the Federal government. Furthermore, not every veterans' job training program would have a federally-funded program for comparison purposes. Therefore, this suggestion was not adopted.

Two writers criticized the fact that the Job Service of the Department of Labor was not mentioned by name in the regulations. One writer suggested that the regulations list the responsibilities of the Assistant Secretary of Labor for Veterans' Employment and Training. One writer stated that the regulations should discuss the counseling which the Department of Labor is providing for some unemployed veterans.

The Department of Labor is required by law to provide an outreach and public information program in connection with Pub. L. 98-77, and is doing so. Since that department is providing this program, it would be appropriate for the Department of Labor to decide if regulations are needed in this area. Therefore, these suggestions were not adopted.

Two writers criticized the fact that the regulations do not provide for administrative monies so that the Department of Labor can help administer the program. Funds to administer laws cannot be generated by regulation. They must be appropriated by the Congress. It would be inappropriate to include a section on administrative monies in these regulations.

One writer suggested that in § 21.4622(c) the Director, Education Service be given a time limit within which he or she must complete the review of the disapproval of a training program.

To adopt this suggestion might mislead an employer into thinking that if the employer had not been notified of the results of the review within a specified time period, the program would be approved. The employer might hire a veteran with the expectation that he or she would be reimbursed for one-half the veteran's starting wage. If the program were ultimately disapproved, the employer would be disappointed. Payments cannot be made for training which is not approvable. To avoid this situation, the agency has decided not to accept this suggestion. It should be noted that if the Director, Education Service overrules the field station director and approves a program, the effective date of the approval would be retroactive to the date the employer applied for approval, or November 29, 1983, whichever is later.

The same writer suggested that when an employer requests a hearing in connection with a withdrawal of approval, the hearing be held and a decision made within 30 days of the request. After careful consideration the VA has decided not to adopt this suggestion.

The law allows both the employer and the veteran-employees to request a hearing concerning a withdrawal of approval. It would be more efficient to combine the hearings for all parties who request one. This can best be done by allowing ample time, as provided by the regulations, for each affected person to request a hearing. If a hearing were required within a few days of the VA's receipt of a request for one, and the affected people did not all request a hearing at the same time, adoption of the policy would result in an unnecessary series of hearings.

Consequently, the VA has decided not to adopt this suggestion.

One writer thought that all associate degrees are primarily vocational in content. He suggested that the States decide if a degree program was primarily vocational in content rather than have the VA make this decision as provided in § 21.1044(d)(4). The VA has decided not to adopt this suggestion, because it is contrary to law.

Section 18(a) of Pub. L. 98-77 states, "Subject to the limitation on the availability of funds set forth in subsection (b), an associate degree program which is predominantly vocational in content may be considered by the Administrator, for the purposes of section 1662(a)(3) of title 38, United States Code, to be a course with an approved vocational objective if such degree program meets the requirements established in such title for approval of such program."

If the Congress had considered that all associate degrees were vocational in content, it would not have included the phrase, "which is predominantly vocational in content" in this section. It is plain that associate degrees which are predominantly vocational in content must be differentiated from those which are not.

Furthermore, the law assigns to the Administrator of Veterans Affairs the task of determining whether or not an associate degree program is primarily vocational in content.

This writer also suggested that the paperwork burden placed on employers was too complex. He suggested that when the Congress was considering this

law, the VA should have used its consultative role to minimize this burden.

When asked by the Congress, the VA may comment on a bill. However, with this law, as with all others, the ultimate decision as to the content of the law rested with the Congress. The Congress wished to make sure that employers were offering bona fide training programs. These regulations are in accordance with Congressional intent, and are designed to ensure that the employer is offering a high quality program.

One writer was dissatisfied with the approval process. He objected to the provision found in § 21.4632 which forbids payment to employers in certain instances even after the employer has notified the VA of the employer's intent to hire a veteran. He suggested postponing the start of the approval process for both veterans and training programs until after the VA receives from an employer a notice of intent to employ a veteran. The VA has decided not to accept this suggestion.

There are two reasons for this decision. The first is that the review to see if the requirements of § 21.4622 are met will be routine in most cases. Consequently, the withholding of payments which appear in § 21.4632 will occur only in unusual circumstances.

In cases where the VA has previously determined and certified the veteran's eligibility, a denial of the claim will occur only if the veteran is already qualified for the job which is the objective of the program, or if the veteran's employment status has changed since he or she requested a determination of eligibility. The VA expects that these denials will involve only a small percentage of claims.

Secondly, adopting this policy would add an element of uncertainty to the program. Most employers would prefer knowing that a program cannot be approved or that a veteran is ineligible when considering whether to hire an individual. A potential employer would lack this information if this suggestion were adopted.

One writer also criticized the way in which the VA determines whether an employer can be reimbursed monthly rather than quarterly. Since the discussion of this matter appeared in the initial regulatory flexibility analysis, this concern is addressed in the final regulatory analysis.

As a result of internal analysis, these final regulations contain some changes from the proposed regulations. The changes provide for delegation of authority to make certain decisions, and to provide for centralized approval of programs which are offered by an employer in more than one State. These changes to the proposed regulations involve only VA organization, procedure or practice. Therefore, under 38 CFR 1.12 they may be made final without publishing them for further comment.

Regulatory Flexibility Analysis

Section 21.4632(a), Title 38, Code of Federal Regulations contains the criteria an employer must meet before the employer may receive payments monthly rather than quarterly. This regulation will have an economic impact on small entities. Accordingly, 5 U.S.C. chapter 6 requires that a regulatory flexibility analysis be written.

Anyone wishing to receive a copy of the regulatory flexibility analysis for this regulation should write to: June C. Schaeffer (225), Assistant Director for Policy and Program Administration, Education Service, Department of Veterans Benefits, Veterans Administration, Washington, DC 20420.

The Administrator of Veterans' Affairs hereby certifies that the remainder of these regulations will not have a significant economic impact on a substantial number of small entities as they are defined in the Regulatory Flexibility Act (RFA), 5 U.S.C. 601–612. Pursuant to 5 U.S.C. 605(b), the remainder of these regulations, therefore, are exempt from the initial and final regulatory flexibility analysis requirements of sections 603 and 604.

The regulations require an employer to certify that various criteria exist in order to obtain approval for a job training program. This will have an economic impact on small entities. However, these regulations are based on section 7(d), Pub. L. 98–77 which states in detail the certifications that employers are required to make. Hence, any economic impact resulting from these requirements derives from the law, not the implementing regulations.

The remainder of the regulations either will affect individual benefit recipients, or, in the case of appeals when job training programs are disapproved, will apply to so few small entities i.e., small businesses, small private and nonprofit organizations and small governmental jurisdictions, that the impact will not be significant.

Information collection requirements contained in §§ 21.4640 and 21.4642 have been approved by the Office of Management and Budget under the provisions of the Paperwork Reduction Act of 1980 (Pub. L. 96–511) and have been assigned OMB control number 2900–0402.

The Catalog of Federal Domestic Assistance number for the program affected by the changes to §§ 21.1044, 21.4025, 21.4131, 21.4135, and 21.4230 is 64.111. There is no Catalog of Federal Domestic Assistance number for the new program established in the remainder of these regulations.

List of Subjects in 38 CFR Part 21

Civil rights, Claims, Education, Grant programs—education, Loan programs—education, Reporting and recordkeeping requirements, Schools, Veterans, Vocational education, Vocational rehabilitation.

Approved: June 27, 1984.

Harry N. Walters,

Administrator.

PART 21—VOCATIONAL REHABILITATION AND EDUCATION

The Veterans Administration is amending 38 CFR Part 21 as set forth below:

1. Section 21.1044 is amended as follows:

A. By removing the word "or" following paragraph (d)(1)(iv) and inserting the word "or" following paragraph (d)(1)(v).

B. By revising paragraphs (c) and (d)(2) (ii) and (iii) and adding paragraphs (d)(1)(vi), (d)(2) (iv) and (v), (d)(4) and the introductory text in paragraph (e) as follows:

§ 21.1044 Additional period of eligibility.

* * * * *

(c) *Time and length of additional eligibility period.* (1) If the ending date of the veteran's period of eligibility or extended period of eligibility as determined by § 21.1042 or § 21.1043 is before January 1, 1982, and the veteran is not pursuing an associate degree program which is predominantly vocational in content, the beginning date of the additional eligibility period will be—

(i) The first date of attendance or training as certified by the school or training establishment, or

(ii) January 1, 1982, whichever is later.

(2) If the ending date of the veteran's period of eligibility or extended period of eligibility as determined by § 21.1042 or § 21.1043 is after December 31, 1981, and the veteran is not pursuing an associate degree program which is predominantly vocational in content, the beginning date of the additional eligibility period will be—

(i) The first date of attendance or training as certified by the school or training establishment, or

(ii) The first day following the end of the veteran's period of eligibility or

extended period of eligibility, whichever is later.

(3) If the ending date of the veteran's period of eligibility or exended period of eligibility as determined by § 21.1042 or § 21.1043 is before October 1, 1983, and the veteran is pursuing an associate degree program which is predominantly vocational in content, the beginning date of the additional eligibility period will be the later of October 1, 1983 or whichever of the following dates is appropriate.

(i) If the associate degree is not a standard college degree, the first date of attendance, or

(ii) If the associate degree is a standard college degree, the date of registration, or date of reporting where the student is required by a published school standard to report in advance of registration.

(4) If the ending date of the veteran's period of eligibility as determined by § 21.1042 or § 21.1043 is after September 30, 1983, and the veteran is pursuing an associate degree program which is predominantly vocational in content, the beginning date of the additional eligibility period will be the later of the first day following the end of the veteran's period of eligibility or extended period of eligibility or whichever of the following is appropriate.

(i) If the associate degree is not a standard college degree, the first date of attendance, or

(ii) If the associate degree is a standard college degree, the date of registration, or date of reporting where the student is required by a published school standard to report in advance of registration.

(5) The ending date of an additional eligibility period is—

(i) The last day of attendance or training as certified by the school or training establishment, or

(ii) December 31, 1984, whichever is earlier. (38 U.S.C. 1662(a), Pub. L. 97–306, 96 Stat. 1429, sec. 18, Pub. L. 98–77, 97 Stat. 443)

(d) *Permissible programs.* (1) During the period of eligibility the veteran may only pursue—

* * * * *

(vi) A program leading to an associate degree, provided that—

(A) The program is predominantly vocational in content, and

(B) Funds have been appropriated and remain available for the purpose of pursuing an associate degree during an additional period of eligibility, and

(C) The veteran will pursue the program after September 30, 1983. (38 U.S.C. 1662(a); sec. 18, Pub. L. 98–77, 97 Stat. 443)

(2) During this period of additional eligibility the veteran may not pursue—

* * * * *

(ii) A course leading to a bachelor's or higher degree;

(iii) A program of secondary education if he or she already has a secondary school diploma or an equivalency certificate; or

(iv) A program leading to an associate degree if—

(A) The associate degree program is not predominantly vocational in content, or

(B) Funds have not been appropriated for pursuit of an associate degree program during an additional period of eligibility, or

(C) The funds appropriated for pursuit of an associate degree during an additional period of eligibility have been exhausted; or

(v) Before October 1, 1983, any training leading to an associate degree. (38 U.S.C. 1662(a); sec. 18, Pub. L. 98–77, 97 Stat. 443)

* * * * *

(4) The Veterans Administration considers that a program leading to an associate degree is predominantly vocational in content when more than one-half the unit subjects required for the associate degree program are vocational in nature. (Sec. 18, Pub. L. 98–77, 97 Stat. 443)

(e) *Need requirements—vocational or occupational objective.* After September 30, 1983, and before January 1, 1985, the Veterans Administration will consider a program leading to an associate degree which is predominantly vocational in content to have a vocational objective as well as an educational objective. (Sec. 18, Pub. L. 98–77; 97 Stat. 443)

* * * * *

2. In § 21.4025, the introductory text of paragraphs (a) and (b) is reprinted for the convenience of the reader and paragraphs (a)(2) and (b)(3) are revised and paragraphs (a)(3) and (b)(4) are added as follows:

§ 21.4025 Nonduplication; Federal programs.

(a) *Chapter 35.* Payment of educational assistance allowance and special training allowance are prohibited to an otherwise eligible person:

* * * * *

(2) For a unit course or courses which are paid for entirely or partly by the United States under the Government Employees' Training Act during any period that full salary is being paid him or her as an employee of the United States; or

(3) During any period when the Veterans Administration is making payments under § 21.4632 on the eligible person's behalf to the eligible person's employer. (Sec. 13, Pub. L. 98–77, 97 Stat. 443)

(b) *Chapter 34.* Payment of educational assistance allowance is prohibited to an otherwise eligible veteran:

* * * * *

(3) For a unit course or courses which are being paid for entirely or partly by the United States under the Government Employees' Training Act during any period that full salary is being paid him or her as an employee of the United States; or

(4) During any period when the Veterans Administration is making payments under § 21.4632 on the veteran's behalf to the veteran's employer. (Sec. 13, Pub. L. 98–77, 97 Stat. 443)

3. The cross reference immediately following § 21.4025 is changed to read "See §§ 21.1025, 21.3024, 21.3025 and 21.4632"

4. In § 21,4131, paragraph (i) is reserved and (j) is added as follows:

§ 21.4131 Commencing dates.

* * * * *

(i) [Reserved]

(j) *Emergency Veterans' Job Training Act of 1983 (§ 21.4630).* The day following the last day for which the veteran's employer received payments on the veteran's behalf under the Emergency Veterans' Job Training Act of 1983. (Sec. 13, Pub. L. 98–77, 97 Stat. 443)

5. In § 21.4135, paragraph (x) is reserved and (y) is added as follows:

§ 21.4135 Discontinuance dates.

* * * * *

(x) [Reserved]

(y) *Emergency Veterans' Job Training Act of 1983 (§ 21.4632).* The first day for which the veteran's employer received payments on the veteran's behalf under the Emergency Veterans' Job Training Act of 1983. (Sec. 13, Pub. L. 98–77, 97 Stat. 443)

6. In §21.4230, paragraph (c) is revised as follows:

§ 21.4230 Requirements.

* * * * *

(c) *Professional or vocational.* A professional or vocational objective is one that leads to an occupation. It may include educational objectives essential to prepare for the chosen occupation. When a program consists of a series of courses not leading to an educational

objective, such courses must be directed toward attainment of a designated professional or vocational objective. After September 30, 1983, and before January 1, 1985, the Veterans Administration will consider a program leading to an associate degree which is primarily vocational in content to have both an educational objective and a vocational objective. (Sec. 18, Pub. L. 98-77, 97 Stat. 443)

* * * * *

7 In Part 21, subpart F-1 is added as follows:

Subpart F-1—Emergency Veterans' Job Training

Job Training

Sec.
21.4600 Job training program.
21.4602 Definitions.

Eligibility Requirements for Participation in a Job Training Program

21.4610 Eligibility requirements.
21.4612 Application and certifications.

Approval of Employer Programs

21.4620 Program approval.
21.4622 Employer applications for approval.
21.4624 Withdrawal of approval.

Payments

21.4630 Entrance into training.
21.4632 Payments.
21.4634 Overpayments.

Administrative

21.4640 Inspection of records.
21.4642 Monitoring and investigations.
21.4644 False Claims Act.
21.4646 Delegations of authority.

Authority: Pub. L. 98-77, 97 Stat. 443.

Subpart F-1—Emergency Veterans' Job Training

Job Training

§ 21.4600 Job training program.

Sections 21.4600 through 21.4646 establish an Emergency Veterans' Job Training Program to assist eligible veterans in obtaining employment through training for employment in stable and permanent positions that involve significant training. The Veterans Administration makes payments to employers who employ and train eligible veterans in these jobs. The payments assist employers in defraying the costs of necessary training. (Sec. 4, Pub. L. 98-77, 97 Stat. 443)

§ 21.4602 Definitions.

For the purpose of the job training program described in §§ 21.4600 through 21.4646 the following definitions apply.

(a) *Veteran.* The term "veteran" means a person who—

(1) Served in the active military, naval or air service, as defined in paragraph (f) of this section, and

(2) Was discharged or released therefrom under conditions other than dishonorable. (Sec. 3, Pub. L. 98-77, 97 Stat. 443; 38 U.S.C. 101(2))

(b) *Korean conflict.* The term "Korean conflict" means the period beginning on June 27, 1950 and ending on January 31, 1955. (Sec. 3, Pub. L. 98-77, Stat. 443; 38 U.S.C. 101(9))

(c) *Compensation.* The term "compensation" means a monthly payment made by the Veterans Administration to a veteran because of a service-connected disability. (Sec. 3, Pub. L. 98-77, 97 Stat. 443; 38 U.S.C. 101(13))

(d) *Service-connected.* The term "service-connected" means, with respect to disability, that the disability was incurred or aggravated, or that the death resulted from a disability incurred or aggravated, in line of duty in the active military, naval or air service. (Sec. 3, Pub. L. 98-77 97, Stat. 443; 38 U.S.C. 101(16))

(e) *State.* The term "State" means each of the several States, Territories, and possessions of the United States, the District of Columbia and the Commonwealth of Puerto Rico. (Sec. 3, Pub. L. 98-77, 38 U.S.C. 101(20))

(f) *Active military, naval or air service.* The term "active" military, naval or air service" includes active duty, any period of active duty for training during which the individual concerned was disabled from a disease or injury incurred or aggravated in line of duty, and any period of inactive duty training during which the individual concerned was disabled from an injury incurred or aggravated in line of duty. (Sec. 3, Pub. L. 98-77, 97 Stat. 443; 38 U.S.C. 101(24))

(g) *Vietnam era.* The term "Vietnam era" means the period beginning August 5, 1964 and ending on May 7, 1975. (Sec. 3, Pub. L. 98-77, 97 Stat. 443; 38 U.S.C. 101(29))

(h) *Growth industry.* A growth industry is one where, discounting for variations caused by the business cycle, employment is expected by the Bureau of Labor Statistics to increase at a rate faster than the average industry. (Sec. 6, Pub. L. 98-77 97, Stat. 443)

(i) *Hours worked.* (1) Hours worked means—

(i) Hours the veteran worked or was trained on the job during the standard workweek and for which the veteran received wages.

(ii) All hours of the veteran's related training which occurred during the standard workweek and for which the veteran received wages, and

(iii) Legal holidays for which the veteran received wages.

(2) Hours worked do not include—

(i) Hours of work or training which exceed the hours of the standard workweek at the place where the veteran is being trained, or

(ii) Sick leave, annual leave, vacation time, administrative leave or time off in lieu of overtime pay other legal holidays. (Sec. 8, Pub. L. 98-77, 97 Stat. 443)

(j) *Full time.* The term "full time" means the standard workweek at the place where the veteran is being trained, but not less than 30 hours, unless a lesser number of hours is established as the standard workweek through collective bargaining between the employer and employees. (Sec. 3, Pub. L. 98-77, 97 Stat. 443)

(k) *Employer.* The term "employer" means a person or business or other entity which is responsible for paying wages to the veteran and can make the certification required by § 21.4622(a). (Sec. 7, Pub. L. 98-77, 97 Stat. 443)

Eligibility Requirements for Participation in a Job Training Program

§ 21.4610 Eligibility requirements.

A veteran will be eligible to participate in a job training program established by § 21.4620 only if he or she meets the requirements of this section. (Sec. 5, Pub. L. 98-77, 97 Stat. 443)

(a) *Unemployment.* (1) On the date of application the veteran must—

(i) Be unemployed, and

(ii) Have been unemployed for at least 15 of the 20 weeks immediately preceding the date of his or her application for participation in a job training program.

(2) For the purpose of this paragraph the Veterans Administration will consider that a veteran is unemployed during any period he or she—

(i) Is without a job (other than casual work),

(ii) Wants work, and

(iii) Is available for work. (Sec. 5, Pub. L. 98-77, 97 Stat. 443)

(b) *Service requirements.* The veteran must have—

(1) Served in the active military, naval or air service for a period of more than 180 days, any part of which was during the Korean conflict or the Vietnam era; or

(2) Served in the active military, naval or air service during the Korean conflict or the Vietnam era, and—

(i) Was discharged or released for a service-connected disability; or

(ii) Is entitled to compensation (or but for the receipt of retirement pay would

be entitled to compensation). (Sec. 5, Pub. L. 98–77, 97 Stat. 443)

§ 21.4612 Applications and certifications.

(a) *Application.* The veteran must apply for participation in the job training program using the form prescribed by the Veterans Administration. (Sec. 5, Pub. L. 98–77, 97 Stat. 443)

(b) *Approval.* The Veterans Administration will approve a veteran's application to participate in a job training program if—

(1) The veteran meets all the requirements of § 21.4610, and

(2) Funds are available to pay employers under the program established in § 21.4600. (Sec. 5, Pub. L. 98–77, 97 Stat. 443)

(c) *Certificates.* (1) Upon approving a veteran's application, the Veterans Administration will furnish the veteran with a certificate for presentation to an employer with a job training program. The certificate will—

(i) State that the veteran is eligible;

(ii) State the date on which it is furnished to a veteran; and

(iii) State that approval of entrance into a job training program is subject to the availability of funds.

(2) A certificate expires 60 days from the date on which it is furnished to the veteran. A certificate may be renewed for an additional 60 days if at the time the veteran applies for renewal, the provisions of paragraph (b) of this section are met. (Sec. 5, Pub. L. 98–77; 97 Stat. 443)

Approval of Employer Programs

§ 21.4620 Program approval.

In order to receive assistance paid on behalf of a veteran, an employer must have a job training program which is approved by the Veterans Administration. That program must meet all the requirements of this section, and the employer must make the certifications found in § 21.4622.

(a) *Program requirements.* (1) The following criteria must be met by all programs.

(i) The training is for at least 6 months unless—

(A) The training is for at least 3 months, and

(B) The Veterans Administration finds that the training will meet the purposes of the Emergency Veterans' Job Training Program as stated in § 21.4600.

(ii) The training program must lead to employment in an occupation which has been determined by the Veterans Administration and the Department of Labor, as appropriate, either—

(A) To be in a growth industry; or

(B) To require the use of new technological skills, or

(C) To be one in which the demand for labor exceeds supply, either in the United States as a whole or in the locality where the trainee will be employed.

(iii) The wages and benefits paid to the veteran participating in the program are not less than but are comparable to the wages and benefits normally paid to other employees participating in a comparable program of job training in the same community.

(iv) The job which is the objective of the program involves significant training.

(v) The training content of the program is adequate to accomplish the training objective of the program. In determining this, the Veterans Administration will consider—

(A) The occupation for which training is to be provided, and

(B) The content of comparable training opportunities available which lead to the occupation.

(vi) The training period under the program is not longer than the training periods that employers in the community customarily require new employees to complete in order to become competent in the occupation for which training is provided.

(vii) The following are available in the training establishment as needed to accomplish the training objective of the program.

(A) Sufficient space,

(B) Equipment,

(C) Instructional material, and

(D) Instructor personnel.

(2) In order to provide all or part of a job training program an employer may enter into an agreement with an educational institution that has a course or courses which have been approved under § 21.4253 or § 21.4254 for the enrollment of veterans. (Secs. 6, 7 and 10, Pub. L. 98–77, 97 Stat. 443)

(b) *Program restrictions.* The Veterans Administration will not approve a program of job training—

(1) For employment which consists of seasonal, intermittent, or temporary jobs;

(2) For employment under which commissions are the primary source of income;

(3) For employment which involves political or religious activities;

(4) For employment with any department, agency, instrumentality or branch of the Federal Government (including the United States Postal Service and the Postal Rate Commission), or

(5) If the training will not be carried out in a State. (Sec. 7(b), Pub. L. 98–77, 97 Stat. 443)

§ 21.4622 Employer applications for approval.

(a) *Applications for approval of apprenticeships and job training programs.* (1) An employer must apply to the Director, Education Service for approval of—

(i) A program of apprenticeship—

(A) The standards for which have been approved by the Secretary of Labor under section 50a of title 29, United States Code as a national apprenticeship program for operation in more than one State, and

(B) For which the training establishment is a carrier directly engaged in interstate commerce and providing training in more than one State; and

(ii) Any other job training program if the employer intends to offer the same training program in more than one State.

(2) For all other job training programs the employer must apply for approval to the Director of the Veterans Administration field station having jurisdiction over the place where the veteran will be trained.

(3) On the application the employer will certify—

(i) The total number of hours of participation in the job training program to be offered the veteran;

(ii) The length of the job training program;

(iii) The starting hourly rate of wages to be paid to a participant in the program;

(iv) A description of the training content of the program (including the name of the educational institution, if any, with which the employer has an agreement to provide all or part of the job training program and a description of that agreement);

(v) The objective of the program;

(vi) That the job training program meets all the requirements of § 21.4620(a)(1)(iii) through (vii);

(vii) The employment of the veteran under the program—

(A) Will not result in the displacement of currently employed workers (including partial displacement such as a reduction in the hours of nonovertime work, wages or employment benefits), and

(B) Will not be in a job while another person is laid off from the same or substantially equivalent job, or will not be in a job the opening for which was created as a result of the employer having terminated the employment of any regular employee or otherwise

having reduced its work force with the intention of hiring a veteran in the job training program;

(viii) That the employer will not employ in the program of job training a veteran who is already qualified for the job for which the training is to be provided;

(ix) That each participating veteran will be employed full time in the job training program;

(x) That the employer will keep records which are adequate—

(A) To show the progress made by each veteran participating in the program;

(B) To demonstrate that all the requirements exist for approval of the program and paying employers on behalf of veterans participating in the program.

(xi) That the employer is planning—

(A) Upon the veteran's completion of the job training program to employ the veteran in the position for which he or she has been trained, and

(B) That the position will be available on a stable and permanent basis to the veteran at the end of the training period.

(xii) The address of the location where the records described in paragraph (a)(3)(x) of this section will be kept;

(xiii) If the employer desires to be paid monthly, the number of employees the employer has:

(xiv) If the employer is basing the request for approval on the grounds that the job training program leads to an occupation requiring the use of new technological skills, a statement of what those skills are;

(xv) That the employer, before the veteran's entry into training will—

(A) Furnish the veteran with a copy of the certification described in this paragraph, and

(B) Obtain and retain the veteran's signed acknowledgment of having received the certification; and

(xvi) That the employer is in compliance with the following laws and all Federal regulations adopted pursuant to those laws:

(A) Title VI of the Civil Rights Act of 1964.

(B) Title IX of the Education Amendments of 1972,

(C) Section 504 of the Rehabilitation Act of 1973, and

(D) The Age Discrimination Act of 1975. (Secs. 6 and 7, Pub. L. 98-77, 97 Stat. 443; 20 U.S.C. 1681, 29 U.S.C. 794, 42 U.S.C. 2000d-1, 42 U.S.C. 6102)

(b) *Veterans Administration action upon receipt of the applications.* (1) Upon receipt of the application, the Director of the Veterans Administration field station of jurisdiction, or the Director, Education Service, as appropriate, will approve the job training program if—

(i) The program meets the requirements of § 21.4620(a);

(ii) None of the restrictions contained in § 21.4620(b) apply to the program;

(iii) The employer has made the certification required in paragraph (a) of this section; and

(iv) The Director of the Veterans Administration field station of jurisdiction, or the Director, Education Service, as appropriate, has no evidence the certifications may be inaccurate.

(2) In determining whether the provisions of § 21.4620(a)(1)(iii) through (vii) are met and whether the certifications are accurate, the Director of the Veterans Administration field station of jurisdiction, or the Director, Education Service, as appropriate, will

(i) Assume that the provisions have been met and that the certification is accurate if the job training program for which the employer is seeking approval has already been approved for training under § 21.4261 or § 21.4262, or the entire job training program is to be given by an educational institution which already has a course or courses approved for training under § 21.4250.

(ii) Consider any information the Department of Labor may have concerning the employer and the job training program; and

(iii) Consider any other evidence which may show whether or not the certification is accurate and whether or not the provisions of § 21.4620(a)(1) (iii) through (vii) are met.

(3) The Director of the Veterans Administration field station, or the Director, Education Service, as appropriate, will notify the employer in writing of the approval or disapproval of this program.

(4) The effective date of the approval will be the later of—

(i) The date the employer applied for approval, or

(ii) November 29, 1983. (Sec. 7, Pub. L. 98-77, 97 Stat. 443)

(c) *Review of a decision not to approve a program.* (1) If an employer disagrees with a decision of a Director of a Veterans Administration field station not to approve the program, the employer may ask that the decision be reviewed by the Director, Education Service. The request—

(i) Must be in writing to the Director of the Veterans Administration field station, and

(ii) Must be received by the Veterans Administration within 60 days of the date on which the employer was notified of the disapproval.

(2) Upon receipt of a valid request for a review, the Director of the Veterans Administration field station will submit all the evidence of record to the Director, Education Service.

(3) The Director, Education Service has the authority to affirm or reverse a decision of the Director of a Veterans Administration field station not to approve a job training program. The Director, Education Service shall base his or her decision on the requirements and restrictions found in § 21.4620 and in paragraph (a) of this section.

(4) A decision concerning approval or disapproval of a job training program is final when made by the Director, Education Service after review of the material submitted by the Veterans Administration field station. The decision is not subject to further administrative review.

(5) When the Director, Education Service has original jurisdiction over an application for approval of a job training program, and an employer disagrees with his or her decision not to approve the program, the employer may ask that the decision be reviewed by the Deputy Chief Benefits Director. The request—

(i) Must be in writing to the Director, Education Service, and

(ii) Must be received by the Veterans Administration within 60 days of the date on which the employer was notified of the disapproval.

(6) Upon receipt of a valid request for review, the Director, Education Service will submit all the evidence of record to the Deputy Chief Benefits Director.

(7) The Deputy Chief Benefits Director has the authority to affirm or reverse a decision of the Director, Education Service not to approve a job training program. The Deputy Chief Benefits Director shall base his or her decision on the requirements and restrictions found in § 21.4620 and in paragraph (a) of this section. There is no right of additional administrative appeal from a decision of the Deputy Chief Benefits Director. (Sec. 7, Pub. L 98-77; 97 Stat. 443)

§ 21.4624 Withdrawal of approval.

(a) *Approval may be withdrawn.* (1) The Director of a Veterans Administration field station, or the Director, Education Service, as appropriate, may immediately disapprove the further participation of veterans in a job training program which has been previously approved when—

(i) The program ceases to meet the requirements of § 21.4620, or

(ii) The Director finds that the employer's certification was false, or

(iii) The employer refuses to make available to an authorized representative of the Federal Government those records which the employer is required to keep under § 21.4640.

(2) The Director of the Veterans Administration field station or the Director, Education Service, as appropriate, shall notify the employer and all veterans participating in the program that approval of the program is being withdrawn. The notices shall be by certified or registered letter, return receipt requested, and shall include—

(i) A statement of the reasons for the withdrawal of approval, and

(ii) An opportunity for a hearing for an employer or a veteran with respect to withdrawal of approval, provided a hearing is requested within 60 days of the notice.

(3) If the Director of the Veterans Administration field station of jurisdiction has provided notice, the hearing will be held before the Committee on Educational Allowances in the field station as established by § 21.4207 If more than one person requests a hearing, the Veterans Administration may hold one hearing, where feasible, for all people who may wish to be heard. The Veterans Administration will not pay for any expenses incurred for counsel or witnesses. The Committee will recommend to the Director whether or not to reinstate the approval. The Director may affirm or reverse the Committee's recommendation. The Director's decision shall be final unless the employer seeks a review as provided in paragraph (a)(5) of this section.

(4) If the Director, Education Service has provided notice, the hearing will be held before the Committee on Educational Allowances at the Veterans Administration field station most convenient for the person requesting the hearing. If more than one person requests a hearing, the Veterans Administration may hold one hearing, where feasible, for all people who may wish to be heard. The Veterans Administration will not pay for any expenses incurred for counsel or witnesses. The Committee will forward the results of the hearing to the Director, Education Service for review. The Director's decision shall be final unless the employer seeks further review as provided in paragraph (a)(7) of this section.

(5) An employer or veteran who disagrees with the decision of a Director of a Veterans Administration field station to withdraw approval from a job training program may request that the decision be reviewed by the Director, Education Service. The employer or veteran may waive the right to a hearing before the review. The request—

(i) Must be made in writing to the Director of the Veterans Administration field station, and

(ii) Must be received by the Veterans Administration within 60 days of the date the Director of the Veterans Administration field station notified the employer or veteran of the decision to withdraw approval, or if a hearing was held at the employer's or veteran's request, within 60 days of the date the decision was affirmed by the station Director.

(6) Upon receipt of a valid request for a review, the Director of the Veterans Administration field station will forward all evidence of record, including a transcript of the hearing if one was held, to the Director, Education Service. The Director, Education Service has the authority to affirm or reverse a decision of the Director of a Veterans Administration field station.

(7) An employer or veteran who disagrees with the decision of the Director, Education Service to withdraw approval from a job training program over which the Director has original approval authority may request that the decision be reviewed by the Deputy Chief Benefits Director. The employer or veteran may waive the right to a hearing before the review. The request—

(i) Must be made in writing to the Director, Education service, and

(ii) Must be received by the Veterans Administration within 60 days of the date the Director, Education Service notified the employer or veteran of the decision to withdraw approval, or if a hearing was held at the employer's or veteran's request, within 60 days of the date the decision was affirmed by the Director, Education Service.

(8) Upon receipt of a valid request for a review, the Director, Education Service will forward all evidence of record, including a transcript of the hearing if one was held, to the Deputy Chief Benefits Director. The Deputy Chief Benefits Director has the authority to affirm or reverse a decision of the Director, Education Service. (Sec. 11, Pub. L. 98-77; 97 Stat. 443)

(b) *Renewal of approval.* In the event that an employer takes steps to bring a job training program back into compliance with the provisions of § 21.4620, the employer may request that a job training program be reapproved. (Sec. 7, Pub. L. 98-77, 97 Stat. 443)

(c) *Authority of the Director, Education Service.* (1) If in the course of his or her administrative duties the Director, Education Service finds that the Director of a Veterans Administration field station approved a job training program in error, the Director, Education Service may direct the Director of a Veterans Administration field station to withdraw the approval in accordance with the procedures outlined in paragraph (a) of this section.

(2) If the Director, Education Service finds that an approval was withdrawn in error, he or she may direct the Director of a Veterans Administration field station to renew the approval without applying the procedures set forth in paragraph (b) of this section. (Secs. 6, 7 and 11, Pub. L. 98-77, 97 Stat. 443)

(d) *Authority of the Deputy Chief Benefits Director.* (1) If in the course of his or her administrative duties the Deputy Chief Benefits Director finds that the Director, Education Service approved a job training program in error, the Deputy Chief Benefits Director may direct the Director, Education Service to withdraw the approval in accordance with the procedures outlined in paragraph (a) of this section.

(2) If the Deputy Chief Benefits Director finds that the Director, Education Service withdrew an approval in error, he or she may direct the Director, Education Service to renew the approval without applying the procedures set forth in paragraph (b) of this section. (Secs. 6, 7 and 11, Pub. L. 98-77; 97 Stat. 443)

Payments

§ 21.4630 Entrance into training.

(a) *Lack of funds may prevent training.* Even though an eligible veteran may be in an approved job training program, the Veterans Administration may withhold or deny approval of the veteran's entry into a job training program if the Veterans Administration determines that funds are not available to make payments to the employer on behalf of the veteran. (Sec. 9, Pub. L. 98-77, 97 Stat. 443)

(b) *Certification before entry into training.* (1) Before the eligible veteran enters an approved job training program, the employer shall notify the Director of the Veterans Administration Regional Office, Houston, Texas that the employer intends to hire the veteran.

(2) The veteran may begin the job training program and the Veterans Administration will make payments to the employer on the veteran's behalf unless within 2 weeks from the date of the notice described in paragraph (b)(1) of this section, the Veterans Administration notifies the employer

that approval of the veteran's entry into the job training program must be withheld or denied due to lack of funds. In determining whether 2 weeks have elapsed, the Veterans Administration will measure the time between the date the employer's notice to the Veterans Administration was postmarked and the date the Veterans Administration's response to the employer was postmarked. (Sec. 9, Pub. L. 98-77, 97 Stat. 443)

(c) *Counseling.* At the request of a veteran who is eligible to participate in a job training program, the Veterans Administration will provide the veteran with employment counseling services to assist him or her in selecting a suitable job training program. The provisions of § 21.4104 apply to this counseling. (38 U.S.C. 111, Sec. 14, Pub. L. 98-77, 97 Stat. 443)

§ 21.4632 Payments.

The Veterans Administration shall not make payments to an employer if the job training program has not been approved as required by § 21.4622(b), or the veteran does not meet the eligibility requirements found in § 21.4610, or approval of a veteran's entrance into training must be withheld or denied due to a lack of funds. Payments made to employers on behalf of veterans in training shall be made in accordance with the provisions of this section:

(a) *Time of payments.* (1) The Veterans Administration shall make payments monthly to any employer who—

(i) Wants monthly payments, and

(ii) Has fewer than 75 employees at the time the veteran enters training.

(2) The Veterans Administration shall make payments quarterly to employers other than those described in paragraph (a)(1) of this section. (Sec. 8, Pub. L. 98-77, 97 Stat. 443)

(b) *Amount of payments.* Subject to the limitations stated in paragraph (e) of this section the amount paid to an employer for any period of time shall be 50 percent of the product of—

(1) The starting hourly wage paid by the employer to the veteran (without regard to overtime, premium pay or fringe benefits), and

(2) The number of hours the veteran worked during that period. (Sec. 8, Pub. L. 98-77, 97 Stat. 443)

(c) *Release of payments.* (1) The Veterans Administration will not pay an employer for a period of training on behalf of a veteran unless all of the criteria contained in this paragraph are met.

(2) Unless the veteran is deceased, has moved, has quit, has had his or her employment terminated, or is similarly unavailable, the Veterans Administration must receive from the veteran a certification that he or she was employed full time by the employer in a job training program during the period.

(3) The Veterans Administration must receive from the employer a certification—

(i) That the employer employed the veteran during that period in an approved job training program,

(ii) That the veteran's performance and progress during that period was satisfactory,

(iii) The number of hours the veteran worked during the period, and

(iv) If this is the employer's first certification for the veteran—

(A) The date the veteran's employment began, and

(B) The starting hourly rate of wages paid to the veteran (without regard to overtime, premium pay or fringe benefits). Sec. 8, Pub. L. 98-77; 97 Stat. 443)

(d) *Duration of payments.* (1) The maximum period of training for which the Veterans Administration will pay an employer on behalf of a veteran is—

(i) Fifteen months in the case of—

(A) A veteran with a service-connected disability rated at 30 percent or more, or

(B) A veteran with a service-connected disability rated at 10 or 20 percent who has been determined under 38 U.S.C. 1506(a) to have a serious employment handicap; and

(ii) Nine months in the case of any other eligible veteran.

(2) If the veteran trains in an approved job training program after having trained in one or more other training programs, the duration of payments made to the employer will be the time period determined by paragraph (d)(1) on this section less the period of time paid on the veteran's behalf to his or her previous employer or employers. (Sec. 5, Pub. L. 98-77, 97 Stat. 443)

(e) *Limitations on payments.* (1) The total amount that may be paid to an employer on behalf of a veteran participating in a job training program is $10,000.

(2) The Veterans Administration will not pay an employer—

(i) On behalf of any veteran who applies for a job training program after November 28, 1984.

(ii) For any job training program which begins after February 28, 1985.

(iii) For any training given to the veteran before the effective date of approval of the job training program.

(iv) For any training the veteran completed after the Veterans Administration withdrew approval of the job training program.

(v) During any period of time in which the veteran receives benefits under chapters 31, 32, 34, 35 or 36, title 38, United States Code.

(vi) For any period during which the employer received any form of assistance on account of the veteran's training or employment including—

(A) Assistance under the Job Training Partnership Act (29 U.S.C. 1501 et seq.) or

(B) A credit under section 44B of the Internal Revenue Code of 1954 (26 U.S.C. 44B).

(vii) For any hours of training the veteran completes in excess of the hours approved by the Veterans Administration for his or her job training program.

(viii) For any period for which the employer—

(A) Fails to provide the certification required by paragraph (c)(3) of this section.

(B) Fails to maintain records or fails to make them available to authorized representatives of the Federal Government as required by § 21.4640.

(ix) For any period if, during that period, the employer was in violation of Title VI of the Civil Rights Act of 1964, Title IX of the Education Amendments of 1972, Sec. 504 of the Rehabilitation Act of 1973 or the Age Discrimination Act of 1975 (Secs. 7, 11, 13 and 17, Pub. L. 98-77. 97 Stat. 443, 20 U.S.C. 1681, 29 U.S.C. 794, 42 U.S.C. 2000d-1, 42 U.S.C. 6102)

§ 21.4634 Overpayments.

(a) *False certification by employer.* Whenever the Veterans Administration finds that an overpayment has been made to an employer on behalf of a veteran as a result of a certification or information contained in the employer's application to the Veterans Administration which was false in any material respect, the amount of the overpayment shall constitute a liability of the employer to the United States. (Sec. 8, Pub. L. 98-77, 97 Stat. 443)

(b) *Noncompliance by employer.* Whenever the Veterans Administration finds that an employer has failed to comply with a requirement of § 21.4620 or § 21.4622 or both (unless the employer's failure is the result of false or incomplete information provided by the veteran), each amount paid to the employer on behalf of a veteran for that period shall be considered an

overpayment. The amount of the overpayment shall constitute a liability of the employer to the United States. (Sec. 8, Pub. L. 98-77, 97 Stat. 443)

(c) *False certification by veteran.* Whenever the Veterans Administration finds that an overpayment has been made to an employer on behalf of a veteran as a result of certification by the veteran, or as a result of information provided to an employer or contained in an application submitted by the veteran to the Veterans Administration which was willfully or negligently false in any respect, the amount of the overpayment shall constitute a liability of the veteran to the United States. (Sec. 8, Pub. L. 98-77, 97 Stat. 443)

(d) *Waivers of overpayments.* Any overpayment established under this section may be waived, entirely or partly, as provided by §§ 1.955 through 1.970 of this chapter. (Sec. 8, Pub. L. 98-77, 97 Stat. 443)

(e) *Recovery of overpayments.* (1) Any overpayment referred to in paragraph (a), (b) or (c) of this section may be recovered in the same manner as any other debt due the United States.

(2) If both the veteran and employer are found liable to the United States under paragraph (a), (b) or (c) of this section for all or part of the overpayment, they shall be considered to be jointly and severally liable to the extent of their respective liabilities. (Sec. 8, Pub. L. 98-77, 97 Stat. 443)

Administrative

§ 21.4640 Inspection of records.

(a) *Availability of records.* The records and accounts of employers pertaining to veterans on behalf of whom assistance shall be paid, as well as other records that the Veterans Administration determines to be necessary to ascertain compliance with the requirements established in §§21.4620 through 21.4632, shall be available at reasonable times for examination by authorized representatives of the Federal Government. (Sec. 12, Pub. L. 98-77, 97 Stat. 443)

(b) *Retention of records.* An employer must keep the records mentioned in paragraph (a) of this section intact and in good condition for at least 3 years following the last month or quarter for which the employer received a payment on behalf of the veteran. Longer retention is not required unless the employer receives a written request from the General Accounting Office or the Veterans Administration not later than 30 days before the end of the 3-year period (Sec. 12, Pub. L. 98-77, 97 Stat. 443)

(Approved by the Office of Management and Budget under control number 2900-0402)

§ 21.4642 Monitoring and investigations.

(a) *Monitoring and investigations.* The Veterans Administration may determine compliance with the provisions of §§ 21.4620 through 21.4632 by—

(1) Monitoring employers and veterans participating in job training programs,

(2) Investigating any matter necessary to determine compliance, and

(3) Requiring the submission of information deemed necessary by the Administrator of Veterans' Affairs before, during or after training. (Sec. 12, Pub. L. 98-77, 97 Stat. 443)

(b) *Scope of investigations.* The Veterans Administration will carry out the monitoring and investigative functions contained in paragraph (a) of this section by—

(1) Examining records (including making certified copies of records),

(2) Questioning employees, and

(3) Entering into any premises or on to any site where—

(i) Any part of the job training program is conducted, or

(ii) Any of the employer's records are kept. (Sec. 12, Pub. L. 98-77, 97 Stat. 443)

(Approved by the Office of Management and Budget under control number 2900-0402)

§ 21.4644 False Claims Act.

An individual who attempts to obtain payments on behalf of veterans through submission of false or misleading statements is subject to the provisions of the False Claims Act (31 U.S.C. 3729-3731, 18 U.S.C. 1001ff). (31 U.S.C. 3729-3731, 18 U.S.C. 1001ff)

§ 21.4646 Delegations of authority.

Except as otherwise provided, authority is delegated to the Chief Benefits Director and to supervisory or adjudicative personnel within the jurisdiction of the Education Service of the Department of Veterans Benefits authorized by him or her to make findings and decisions under Pub. L. 98-77 and the applicable regulations, precedents and instructions, as to programs authorized by §§ 21.4600 through 21.4644. (38 U.S.C. 212(a))

[FR Doc. 84-18836 Filed 7-17-84; 8:45 am]

BILLING CODE 8320-01-M

ENVIRONMENTAL PROTECTION AGENCY

40 CFR Part 761

[OPTS-62041; TSH FRL 2611-5]

Toxic Substances Control Act; Polychlorinated Biphenyls (PCBs) Manufacturing, Processing, Distribution in Commerce, and Use Prohibitions; Editorial Amendment of Definitions

Correction

In FR Doc. 84-16399, beginning on page 25239, in the issue of Wednesday, June 20, 1984, make the following corrections:

1. On page 25239, in the third column, in § 761.3, in the fifth paragraph, in the last line, "capacitors as" should read "capacitors are as"

2. On page 25240, in the first column, in § 761.3, in paragraph "(3)", in the fourth line, "at 2,000" should read "below 2,000"

BILLING CODE 1505-01-M

40 CFR Part 761

[OPTS-62042; FRL-2621-8]

Toxic Substances Control Act; Polychlorinated Biphenyls (PCBS) Manufacturing, Processing, Distribution in Commerce, and Use Prohibitions; Technical Amendment

AGENCY: Environmental Protection Agency (EPA).

ACTION: Final rule.

SUMMARY: EPA is issuing an update of its American Society for Testing Materials (ASTM) test methods that are referenced in § 761.19, in an effort to reflect the most recent edition of material incorporated by reference in that section.

DATE: This final rule is effective August 1, 1984.

FOR FURTHER INFORMATION CONTACT: Edward A. Klein, Director, TSCA Assistance Office (TS-799), Office of Toxic Substances, Environmental Protection Agency, Rm. E-543, 401 M St., SW., Washington, D.C. 20460, Toll free: (800-424-9065), In Washington, D.C.: (554-1404), Outside the USA: (Operator-202-554-1404).

SUPPLEMENTARY INFORMATION: In the Federal Register of May 21, 1982 (47 FR 22098), EPA established § 761.19 to include a central listing of incorporations by reference in 40 CFR Part 761. The incorporation by reference availability information is required

under 1 CFR Part 51. In an effort to reflect the most recent edition of material incorporated by reference in § 721.60, § 761.19 is being revised at this time.

Copies of the incorporated material may be obtained from the EPA Document Control Officer (TS-793), Office of Pesticides and Toxic Substances, Rm. 106, 401 M St., SW., Washington, D.C. 20460, and from the ASTM, 1916 Race St., Philadelphia, PA.

Since there is no substantive difference in the material referenced, no public comment is required.

Executive Order 12291

Under Executive Order 12291, EPA must judge whether a rule is a "major rule" and, therefore, subject to the requirement that a Regulatory Impact Analysis be prepared. EPA has determined that this rule is not a major rule as the term is defined in section 1(b) of the Executive Order. Therefore, EPA has not prepared a Regulatory Impact Analysis for this rule.

EPA has concluded that this final rule is not "major" under the criteria of section 1(b) because the annual effect of this rule on the economy will not cause a major increase in costs or prices for any sector of the economy or for any geographic region; and it will not result in any significant adverse effects in competition, employment, investment, productivity, innovation, or on the ability of United States enterprises to compete with foreign markets. In fact, this rule simply provides for updating analytical test methodology to the state of the art. This rule was submitted to the Office of Management and Budget for review as required by E.O. 12291.

Regulatory Flexibility Act

Under section 605(b) of the Regulatory Flexibility Act, EPA certifies that this rule will not, if promulgated have a significant impact on a substantial number of small entities, and therefore does not require a Regulatory Flexibility Analysis. This rule merely updates certain (ASTM) test methods cited in the PCB regulations to current ASTM standards. In fact, this update will bring the analytical methods cited in the PCB regulations to the state of the art. Since no negative economic effect is expected upon any business entity from the promulgation of this rule, EPA certifies that this rule will not have a significant economic impact on small entities.

Paperwork Reduction Act

EPA has determined that the Paperwork Reduction Act of 1980, 44 U.S.C. 3501 et. seq. does not apply to this final rule since no information collection or recordkeeping is involved.

(Sec. 6, 90 Stat 2020 (15 U.S.C. 2065))

List of Subjects in 40 CFR Part 761

Intergovernmental relations, Hazardous materials, Labeling, Polychlorinated biphenyls, Recordkeeping and reporting requirements, Incorporation by reference.

Dated: June 27, 1984.

John A. Moore,

Assistant Administrator for Pesticides and Toxic Substances.

PART 761—[AMENDED]

Therefore, Chapter I of Title 40, is amended by revising the table in § 761.19 to read as follows:

§ 761.19 References.

* * * * *

(b) * * *

References	CFR Citation
ASTM D-93-80 Standard Test Method for Flash Point by Pensky-Martens Closed Tester.	§ 761.60(a)(3)(□)(B)(6); § 761.75(b)(5)(□).
ASTM D-129-64 (Reapproved 1978) Standard Test Method for Sulfur in Petroleum Products (General Bomb Method).	§ 761.60(a)(3)(□)(B)(6).
ASTM D-240-76 (Reapproved 1980) Standard Test Method for Heat of Combustion of Liquid Hydrocarbon Fuel by Bomb Calorimeter.	§ 761.60(a)(3)(□)(B)(6).
ASTM D-482-80 Standard Test Method for Ash from Petroleum Products.	§ 761.60(a)(3)(□)(B)(6).
ASTM D-524-81 Standard Test Method for Ramsbottom Carbon Residue of Petroleum Products.	§ 761.60(a)(3)(□)(B)(6)
ASTM D-808-81 Standard Test Method for Chlorine in New and Used Petroleum Products (Bomb Method).	§ 761.60(a)(3)(□)(B)(6).
ASTM D-923-81 Standard Test Method for Sampling Electrical Insulating Liquids.	§ 761.60(a)(1)(□); § 761.60(a)(2)(□).
ASTM D-1266-80 (Reapproved 1981) Standard Test Method for Sulfur in Petroleum Products (Lamp Method).	§ 761.60(a)(3)(□)(B)(6).
ASTM D-1796-69 (Reapproved 1977) Methods for Water and Sediment in Crude Oils and Fuel Oils by Centrifuge.	§ 761.60(a)(3)(□)(B)(6).
ASTM D-2158-80 Standard Test Method for Residues in Liquefied Petroleum (LP) Gas.	§ 761.60(a)(3)(□)(B)(6).
ASTM D-2709-68 (Reapproved 1982) Standard Test Method for Water and Sediment in Distillate Fuel by Centrifuge.	§ 761.60(a)(3)(□)(B)(6).
ASTM D-2784-80 Standard Test Method for Sulfur in Liquefied Petroleum Gases (Oxyhydrogen Burner or Lamp).	§ 761.60(a)(3)(□)(B)(6)
ASTM D-3178-73 (Reapproved 1979) Standard Test Methods for Carbon and Hydrogen in the Analysis Sample of Coke and Coal.	§ 761.60(a)(3)(□)(B)(6).
ASTM D-3278-78 (Reapproved 1982) Standard Test Methods for Flash Point of Liquid by Setaflash Closed Tester.	§ 761.75(b)(3)(□).
ASTM E-258-67 (Reapproved 1982) Standard Test Method for Total Nitrogen Inorganic Material by Modified KJELDAHL Method.	§ 761.60(a)(3)(□)(B)(6).

[FR Doc. 84-18951 Filed 7-17-84; 8:45 am]

BILLING CODE 6560-50-M

FEDERAL COMMUNICATIONS COMMISSION

47 CFR Parts 13, 73 and 74

Oversight of the Radio and TV Broadcast Rules

AGENCY: Federal Communications Commission.

ACTION: Final rule.

SUMMARY: This Order amends broadcast station regulations in 47 CFR Parts 73 and 74 of the FCC rules. Amendments are made to delete regulations that are no longer necessary, correct inaccurate rule texts, contemporize certain requirements and to execute editorial revisions as needed for purposes of clarity and ease of understanding.

DATE: Effective July 18, 1984.

ADDRESS: Federal Communications Commission, Washington, D.C. 20554.

FOR FURTHER INFORMATION CONTACT: Steve Crane, Mass Media Bureau, (202) 632-5414.

SUPPLEMENTARY INFORMATION:

List of Subjects

47 CFR Part 13

Commercial radio operators licenses, Radio.

47 CFR Part 73

Radio broadcast, Television.

47 CFR Part 74

Television.

Order

In the matter of oversight of the radio and TV broadcast rules.

Adopted: June 29, 1984.

Released July 11, 1984.

By the Chief, Mass Media Bureau.

1. In this *Order*, the Commission focuses its attention on the oversight of its radio and TV broadcast rules. Modifications are made herein to update, delete, clarify or correct broadcast regulations as described in the following amendment summaries:

(a) When a licensed operator is employed at more than one broadcast station, his original license must be posted at one station and FCC Form 759, the verification of radio operator license or permit, must be posted at the other station(s).

The Form 759 is available at the FCC in Washington or at FCC field offices. It is a somewhat complicated form which

must be completed jointly by the licensed operator and the station general manager who certifies that the employee is indeed a licensed operator. Complying with the requirements contained in the form is considered more difficult and time consuming than applying for the original Restricted Radiotelephone Operator Permit.

A much simpler verification procedure is adopted herein, which will allow the radio operator permit or license to be photocopied and posted, thereby eliminating the requirement to procure the Form 759 and complete it together with the station general manager. This relaxation of our rules relieves both the operator and station manager of time consuming details and comports with our deregulatory measures in operator licensing. Amendments will be made, as appropriate, in Parts 13, 73 and 74. (See appendix items 1, 7 and 12.)

(b) With the adoption of the Report and Order in General Docket 83-10, Amendment of the Regulations to Expand the Notification and Verification Equipment Authorization Procedures, certain revisions were made in § 73.53. The section title was changed, a paragraph was removed and a number of paragraphs and subparagraphs were revised. 49 FR 3991, February 1, 1984. Subsequent to the adoption of these changes, public notice was given in the Federal Register of the adoption of an Order which also revised two paragraphs in § 73.53. 49 FR 4208, February 3, 1984. The changes made were to the rule text extant *prior* to the modifications adopted in G.D. 83-10, and nullified certain changes made in that Report and Order. To rectify these inadvertent and incorrect revisions, amendments are made herein to the section title and paragraphs (a) and (a)(1), and (c) and (c)(11). (See Appendix item 2.)

(c) In § 73.342, Automatic Transmission system facilities, there is a cross reference in subparagraph (a)(2) to § 73.267 (b)(1). The text of § 73.342 attributes to § 73.267 a statement regarding allowable transmitter output power ranges. Such power level requirements are found not in § 73.267, but in paragraph (b) of § 73.1560, and the cross reference is corrected herein to so state. (See Appendix item 3.)

(d) With the adoption of the Memorandum Opinion and Order in Docket 21136, on March 28, 1984, the Commission amended its policy governing underwriting and donor acknowledgements aired by public broadcast stations. 49 FR 13534, April 5, 1984.

The rules affected are §§ 73.503, Licensing requirements and service; § 73.621, Noncommerical educational stations; and § 73.4163, the FCC policy, Noncommercial nature of educational broadcast stations. In §§ 73.503 and 73.621, a Note is given setting forth the citations for the Second Report and Order in this matter adopted in April 1981 and for the Memorandum Opinion and Order adopted in June, 1982. If Commission interpretation of the donor rule is to be fully understood, the Memorandum Opinion and Order of April 1984 must also be cited, and it is added via this Order to both Notes.

The Memorandum Opinion and Order of July 1982 is also added, as paragraph (b), to the current listing of the policy pertaining to this matter in § 73.4163, and the Memorandum Opinion and Order adopted in April 1984 will be added as paragraph (c). (See Appendix items 4, 6 and 11.)

(e) The control systems of automatic transmission system facilities must have devices to monitor and control the output power of the transmitter either by the direct or indirect method as stated in subparagraph (b)(1) of § 73.542. The rule user is directed to turn to § 73.567 (a) and (b)(1)(i) for the methods' description. Since this technical regulation applies both to commercial and noncommercial FM Stations we have deleted the regulatory text from § 73.567 and retain the section only for the purpose of directing the rule user to § 73.267, wherein are found the specifics of power determination via the direct and indirect methods. The cross reference is changed, in § 73.542, to § 73.267

Another cross reference to § 73.567 is found in the operating power tolerance rule, § 73.1560. In paragraph (b), pertaining to FM stations, reference is made to "procedures specified in § 73.267 (§ 73.567 for noncommercial educational FM stations) ..." As described above, there is no reason to retain the parenthetical text, and it also is removed. (See Appendix items 5 and 8.)

(f) Broadcast application and report forms are listed in § 73.3500 by Form number and title. The title of Form 314 is incorrectly stated as "Application for Consent to Assignment of Broadcast Construction Permit or License." The word "Station" following "Broadcast" has been omitted. The title is corrected herein to read" Broadcast Station ." (See Appendix item 9.)

(g) Corrections were made in the text of paragraph (c) of § 73.3580 via Order adopted on May 4, 1983. Paragraph (c) has four subparagraphs, (c)(1), (2), (3) and (4) which were left unchanged. These subparagraphs, and the subdivisions thereto, (c)(1), (i), (ii) and (iii); (c)(2)(i) and (c)(3)(i) were inadvertently deleted in the printing of the October 1, 1983 edition of the Code of Federal Regulations. They are restored via this Order. Also, the text of subparagraph (c)(4) is corrected herein. It reads: "The notice required in paragraphs (f)(1), (2) and (3) of this section shall contain the information described in paragraph (f) of this section. "It, of course is meant to state "The notice required in subparagraphs (c)(1), (2) and (3) of this section shall contain the information described in paragraph (f) of this section." (See Appendix item 10.)

2. No substantive changes are made herein which impose additional burdens or remove provisions relied upon by licensees or the public. We conclude, for the reasons set forth above, that these revisions will serve the public interest.

3. These amendments are implemented by authority delegated by the Commission to the Chief, Mass Media Bureau. Inasmuch as these amendments impose no additional burdens and raise no issue upon which comments would serve any useful purpose, prior notice of rulemaking, effective date provisions and public procedure thereon are unnecessary pursuant to the Administrative Procedure and Judicial Review Act provisions of 5 U.S.C. 553(b)(3)(B).

4. Since a general notice of proposed rulemaking is not required, the Regulatory Flexibility Act does not apply.

5. Therefore, it is ordered, That pursuant to sections 4(i), 303(r) and 5(c)(1) of the Communications Act of 1934, as amended, and §§ 0.61 and 0.283 of the Commission's Rules, Parts 13, 73 and 74 of the FCC Rules and Regulations are amended as set forth in the attached Appendix, effective 30 days from the date of publication in the Federal Register.

6. For further information on this *Order*, contact Steve Crane, (202) 632-5414, Mass Media Bureau.

Federal Communications Commission.

James C. McKinney,

Chief, Mass Media Bureau.

Appendix

PART 13—[AMENDED]

1. 47 CFR 13.74 is amended by revising paragraph (b) introductory text to read as follows:

§ 13.74 Posting requirements for operator licenses.

* * * * *

(b) Licensed commercial radio operators, on duty at two or more

transmitting systems, which are not co-located, shall post their radio operator license or permit at one of the stations, and a photocopy of the license or permit at each other station in accordance with the rules governing those stations when:

* * * * *

PART 73—[AMENDED]

2. 47 CFR 73.53 is amended by revising the section title; and by revising paragraph (a) and subparagraph (a)(1), and paragraph (c) and subparagraph (c)(11) to read as follows:

§ 73.53 Requirements for authorization of antenna monitors.

(a) *General requirements.* (1) Antenna monitors shall be type approved or notifed by the FCC. Effective March 5, 1984, only grants of notification will be issued for antenna monitors.

* * * * *

(c) An antenna monitor eligible for authorization by the FCC shall meet the following specifications:

* * * * *

(11) The monitor must be accompanied by complete and correct schematic diagrams and operating instructions when submitted for type approval. When approved under notification, these materials shall be retained by the applicant and not submitted unless otherwise requested by the FCC. For the purpose of the equipment authorization, these diagrams and instructions shall be considered as part of the monitor.

* * * * *

3. 47 CFR 73.342 is amended by revising subparagraph (b)(2) to read as follows:

§ 73.342 Automatic transmission system facilities.

* * * * *

(b) * * *

(2) The control system must have devices to automatically adjust the transmitter output power to the authorized power for each mode of operation within the range specified in § 73.1560(b). If the automatic control device is unable to adjust the output power to a level below 105% of the authorized power after 3 minutes or upon a total of 3 samplings, the emissions of the station will terminate.

* * * * *

4. 47 CFR 73.503 is amended by revising the Note which follows paragraph (d) to read as follows:

§ 73.503 Licensing requirements and service.

* * * * *

(d) * * *

Note—Commission interpretation of this rule, including the acceptable form of acknowledgements, may be found in the Second Report and Order in Docket No. 21136 (Commission Policy Concerning the Noncommercial Nature of Educational Broadcast Stations), 86 F.C.C. 2d 141 (1981); the Memorandum Opinion and Order in Docket No. 21136, 90 FCC 2d 695 (1982), and the Memorandum Opinion and Order in Docket 21136, 49 FR 13534, April 5, 1984.

5. 47 CFR 73.542 is amended by revising subparagraph (b)(1) to read as follows:

§ 73.542 Automatic transmission system facilities.

* * * * *

(b) * * *

(1) The control system must have devices to monitor and control the output power of the transmitter either by the direct or indirect methods as described in § 73.267 (b) and (c).

* * * * *

6. 47 CFR 73.621 is amended by revising the Note which follows paragraph (e) to read as follows:

§ 73.621 Noncommercial educational stations.

* * * * *

(e) * * *

Note—Commission interpretation of this rule, including the acceptable form of acknowledgements, may be found in the Second Report and Order in Docket No. 21136 (Commission Policy Concerning the Noncommercial Nature of Educational Broadcast Stations), 86 F.C.C. 2d 141 (1981); the Memorandum Opinion and Order in Docket No. 21136, 90 FCC 2d 695 (1982), and the Memorandum Opinion and Order in Docket 21136, 49 FR 13534, April 5, 1984.

* * * * *

§ 73.1230 [Amended]

7 47 CFR 73.1230 is amended by revising paragraph (b) to read as follows:

* * * * *

(b) The operator license of each station operator employed full-time or part-time or via contract, shall be permanently posted and shall remain posted so long as the operator is employed by the licensee. Operators employed at two or more stations, which are not co-located, shall post their operator license or permit at one of the stations, and a photocopy of the license or permit at each other station. The operator license shall be posted where the operator is on duty, either:

(1) At the transmitter; or

(2) At the extension meter location; or

(3) At the remote control point, if the station is operated by remote control; or

(4) At the monitoring and alarm point, if the station is using an automatic transmission system.

* * * * *

§ 73.1560 [Amended]

8. 47 CFR 73.1560 is amended by revising paragraph (b) to read as follows:

* * * * *

(b) *FM stations.* Except as provided in paragraph (d) of this section, the transmitter output power of an FM station, with power output as determined by the procedures specified in § 73.267, which is authorized for output power more than 10 watts must be maintained as near as practicable to the authorized transmitter output power and may not be less than 90% nor more than 105% of the authorized power. FM stations operating with authorized transmitter output power of 10 watts or less, may operate at less than the authorized power, but not more than 105% of the authorized power.

§ 73.3500 [Amended]

9. 47 CFR 73.3500, Application and Report Forms, is amended by correcting the Title to Form number 314 to read as follows:

Form No.	Title
314	Application for Consent to Assignment of Broadcast Station Construction Permit or License.

10. 47 CFR 73.3580 is amended by revising paragraph (c) to read as follows:

§ 73.3580 Local public notice of filing of broadcast applications.

* * * * *

(c) An applicant who files an application or amendment thereto which is subject to the provisions of this section, must give a notice of this filing in a newspaper. Exceptions to this requirement are applications for renewal of AM, FM, TV, and International broadcasting stations; low power TV stations; TV and FM translator stations; FM booster stations; and applications subject to paragraph (e) of this section. The local public notice must be completed within 30 days of the tendering of the application. In the event the FCC notifies the applicant that a major change is involved, requiring the applicant to file public notice pursuant to §§ 73.3571, 73.3572, 73.3573 or 73.3578, this filing notice shall be given in a newspaper following this notification.

(1) *Notice requirements for these applicants are as follows.* (i) In a daily newspaper of general circulation

published in the community in which the station is located, or proposed to be located, at least twice a week for two consecutive weeks in a three-week period; or,

(ii) If there is no such daily newspaper, in a weekly newspaper of general circulation published in that community, once a week for 3 consecutive weeks in a 4-week period; or,

(iii) If there is no daily or weekly newspaper published in that community, in the daily newspaper from wherever published, which has the greatest general circulation in that community, twice a week for 2 consecutive weeks within a 3-week period.

(2) *Notice requirements for applicants for a permit pursuant to section 325(b) of the Communications Act ("* * * Studios of Foreign Stations") are as follows.* (i) In a daily newspaper of general circulation in the largest city in the principal area to be served in the U.S.A. by the foreign broadcast station, at least twice a week for 2 consecutive weeks within a three-week period.

(3) *Notice requirements for applicants for a change in station location are as follows.* (i) In the community in which the station is located and the one in which it is proposed to be located, in a newspaper with publishing requirements as in paragraphs (c)(1)(i), (ii) or (iii) of this section.

(4) The notice required in paragraphs (c)(1), (2) and (3) of this section shall contain the information described in paragraph (f) of this section.

* * * * *

11. 47 CFR 73.4163 is amended by adding new paragraph (c) to read as follows:

§ 73.4163 Noncommercial nature of educational broadcast stations.

* * * *

(c) See Memorandum Opinion and Order, BC Docket 21136, FCC 84-105, adopted March 28, 1984. 49 FR 13534, April 5, 1984.

PART 74—[AMENDED]

§ 74.664 [Amended]

12. 47 CFR 74.664 is amended by revising paragraph (b) to read as follows:

* * * * *

(b) The operator license of each station operator shall be posted at the place where he is on duty. However, if the original license of a station operator is posted at another radio transmitting station in accordance with the rules governing that class of station and is there available for inspection by an authorized FCC representative, a photocopy of the operator license may be posted at the television auxiliary broadcast station in lieu of such original license. If the television auxiliary broadcast station is licensed for mobile operation, a duly issued verification card (Form 758-F) attesting to the existence of such original license may be carried on the person of the operator in lieu of the posting of such license or verified statement.

Note.—* * *

[FR Doc. 84-18784 Filed 7-17-84; 8:45 am]
BILLING CODE 6717-01-M

Proposed Rules

Federal Register
Vol. 49, No. 139
Wednesday, July 18, 1984

This section of the FEDERAL REGISTER contains notices to the public of the proposed issuance of rules and regulations. The purpose of these notices is to give interested persons an opportunity to participate in the rule making prior to the adoption of the final rules.

DEPARTMENT OF AGRICULTURE

Agricultural Marketing Service

7 CFR Parts 907 and 908

[Docket Nos. AO-245-A8 & AO-250-A6]

Navel Oranges Grown in Arizona and Designated Part of California; Valencia Oranges Grown in Arizona and Designated Part of California; Decision on Proposed Further Amendment of Marketing Agreements and Orders 907 and 908, Both as Amended

AGENCY: Agricultural Marketing Service.

ACTION: Proposed rule.

SUMMARY: This decision would amend the Federal marketing agreements and orders for navel and Valencia oranges grown in Arizona and designated part of California. Navel and Valencia orange producers will be given the opportunity to vote in separate referenda to determine if they favor the proposed changes in the respective marketing orders.

DATE: The voting period for purposes of the referenda herein ordered is August 1 through August 31, 1984.

FOR FURTHER INFORMATION CONTACT: William J. Doyle, Chief, Fruit Branch, Fruit and Vegetable Division, Agricultural Marketing Service, United States Department of Agriculture, Washington, D.C. 20250, telephone 202-447-5975.

SUPPLEMENTARY INFORMATION: Prior documents in this proceeding: Notice of hearing issued March 11, 1983, and published in the March 17, 1983, issue of the Federal Register (48 FR 11276); and Notice of Recommended Decision issued April 5, 1984, and published in the April 11, 1984, issue of the Federal Register (49 FR 14360).

This administrative action is governed by the provisions of sections 556 and 557 of Title 5 of the United States Code and therefore is not subject to the requirements of Executive Order 12291.

Preliminary Statement

A public hearing was held upon proposed further amendment of the marketing agreements, as amended, and Order Nos. 907 and 908, as amended (7 CFR Parts 907 and 908), regulating the handling of navel and Valencia oranges grown in Arizona and designated parts of California. The hearing was held pursuant to the provisions of the Agricultural Marketing Agreement Act of 1937, as amended (7 U.S.C. 601 *et seq.*), and the applicable rules of practice (7 CFR Part 900), in Bakersfield, California, on April 5-22, 1983, pursuant to notice thereof.

Upon the basis of the evidence introducted at the hearing and the record thereof, the Administrator, on April 5, 1984, filed with the Hearing Clerk, U.S. Department of Agriculture, the recommended decision containing the notice of the opportunity to file written exceptions thereto. Exceptions were received from Harris Farms, Coalinga, California, Guimarra Vineyards, Bakersfield, California, Pandol and Sons, Delano, California, Exeter Packers, Inc., Exeter, California, and Paramount Citrus Association, San Fernando, California, Belridge, Bakersfield, California, Pure Gold, Inc., Redlands, California, California Citrus Mutual (CCM), Visalia, California, Exeter Orange Company, Exeter, California, the Navel Orange Administrative Committee and the Valencia Orange Administrative Committee (NOAC/VOAC), Los Angeles, California, the Committee to Improve Marketing Orders 907 and 908 (CTIMO), Sanger, California, LoBue Bros. Inc., Western Growers Association, Irvine, California, California-Arizona Citrus League (CACL), Van Nuys, California, Pandol Bros. Packing, Orosi, California, Suntreat Growers and Shippers, Lindsay, Sunkist Growers, Inc., Sherman Oaks, California, the Department of Justice, and the U.S. Small Business Administration. A ruling on each exception is contained under the material issue to which the exception relates. The material issues, findings and conclusions, rulings, and general findings of the recommended decision set forth in the April 11, 1984, issue of the Federal Register (49 FR 14360; FR Doc. 84-9549) are hereby approved and adopted and are set forth in full herein subject to modifications as hereinafter set forth.

This decision substantially modifies conclusions in material issue (4)—with respect to additional requirements for the marketing policy; material issue (10) with respect to generic advertising authority; material issue (11) with respect to marketing incentive allotment; and material issue (15) with respect to reapportionment of committee membership and voting requirements. I addition, a number of minor changes are made in the decision for clarity and correction of grammatical and typographical errors.

Material Issues

The material issues of record addressed in this decision are as follows:

(1) Eliminate the prorate provisions of the orders; (2) Provide authority for the committees to preclude the issuance of volume regulation before specified dates and limit the number of regulation weeks; (3) Provide authority for prorate periods of two or more weeks; (4) Specify additional requirements for the marketing policy; (5) Provide for the suspension of volume regulation when a specified portion of the crop has been shipped in each district; (6) Amplify the authority exemption a specific size or sizes of oranges from prorate regulation when conditions warrant; (7) Authorize changes in prorate base computation, (8) Permit undershipments of allotment to be carried forward to two weeks without forfeiture and authorize further changes to be implemented through informal rulemaking; (9) Include shipments to Mexico in a handler s prorate quantity; (10) Provide authority for a generic advertising program; (11) Provide that a marketing incentive program be implemented through informal rulemaking; (12) Revise early maturity allotment provisions; (13) Establish committee tenure requirements; (14) Establish periodic referenda; (15) Revise provisions relative to the establishment and membership of the committees and voting and quorum requirements; (16) Increase the compensation of committee members and alternates; (17) Authorize the committee to levy an interest or late payment charge on past due assessments; (18) Revise reporting requirements and establish recordkeeping requirements; (19)

Provide authority to revise exemptions for charitable donation; (20) Provide authority for consumer affairs advisors; (21) Define "carload"; (22) Revise "weekly report" and "manifest report"; and (23) Make conforming changes.

Background Statement [1]

Marketing orders 907 and 908 cover California and Arizona navel and Valencia oranges and have been in continuous existence since 1953. The orders regulate the handling of oranges shipped to the fresh market in the continental United States and Canada. The major regulatory features of these two programs are the flow-to-market provisions. Oranges which are exported (except to Canada); processed into products, or otherwise disposed of (*e.g.*, charitable donations, roadside sales, or parcel post sales) are not regulated under the order. The production area is divided into four districts for navels and three for Valencias.

Order controls apply at the handler level. A prominent objective of the orders is to adjust the short-term supply to meet market conditions which are shbject to wide short-term variations. A series of short-term regulations can also stabilize shipments over an extended period, *i.e.*, "prorate" supplies over time. The order provides for adapting to changing supply and demand conditions as well as recognizing ongoing differences in production characteristics both within the industry generally and within an individual district.

In recent years, there has been considerable controversy surrounding these programs from within and without the industry. The amendment hearing included testimony on a wide range of economic considertions surrounding these two programs.

Many industry changes have taken place since the beginning of the marketing orders. However, the reasons for the changes are not easily agreed upon, particularly the impact of the marketing orders on the current level of production and the long-term marketing situation. Basic philosophical differences have arisen in the industry regarding proposed changes in the marketing orders; thus, it is necessary and appropriate to examine the factors that have led to this proceeding and to segregate independent issues from those that are marketing order dependent.

[1] Official notice is taken of the following:

A. Annual reports of the Navel and Valencia Orange Administrative Committee.

B. Acreage reports published by the Navel and Valencia Orange Administrative Committees.

C. Production, Utilization and Price reports published by the Statistical Reporting Service, USDA.

A. The Product

Oranges are consumed fresh and in various forms of processed product. Prior to the early 1950's, most oranges were sold to consumers as fresh fruit. However, processing technologies developed and implemented in the 1950's led to structural change within the total U.S. industry. Consumers no longer had to purchase fresh oranges for juice and were able to buy the finished product. This physical product development led to overall change in consumer preferences and, in turn, to new market development.

Since California-Arizona oranges generally have the characteristics that make them desirable for sale as fresh fruit and Florida oranges are comparatively better suited for processing, the industries developed differently. The processing industry became predominant in Florida and in the long-term this has meant that Florida has sold fewer oranges in fresh form as the State's fresh oranges have had to compete with a remunerative products market.

California/Arizona navel oranges are a winter orange with harvest beginning in the late fall (October or November) and extending until late spring—about the same harvest span as the Florida and Texas season. California-Arizona Valencias are more of a summer orange with the season extending from about February until the following winter. (Navels are not preferred for use as juice even though some may go to processing and subsequently be mixed with other juices before packaging.) California-Arizona Valencias are more suited for processing but are also popular for fresh market because of their appearance, quality, and seasonal characteristics.

Shortly after the beginning of the season, a high proportion of each California-Arizona orange crop is mature and could be shipped to market; but markets are insufficient to absorb that quantity of fruit in a short period of time. Fortunately, mature oranges are storable on the trees and, if left unharvested, will continue to be marketable during the normal season. This characteristic allows for the use of the flow-to-market features of the orders.

B. Industry Structure

The producing sector of the California-Arizona orange industry is characterized by a large number of relatively small units. In 1981–82, there were about 4,000 growers of California-Arizona navel oranges and 3,500 growers of California-Arizona Valencia oranges. Many growers produce both varieties. The average orchard size has been increasing and larger-scale business units have accounted for an increasing proportion of the total output. In 1981–82, based on the number of growers and total acreage, the average navel unit was 30 acres versus about 20 acres in the mid-1960's. The average Valencia unit, however, has stayed about the same, approximately 20 acres.

California-Arizona oranges marketed fresh are graded for quality according to industry standards. These differ slightly among handlers, but are basically refinements of California State grades. Oranges used for processing are not necessarily graded but are segregated from fresh oranges at the packinghouse with value determined by criteria other than appearance.

There are approximately 121 handlers of Californi-Arizona navel oranges and 123 handlers of Californi-Arizona Valencias. Handlers are responsible for packing and distributing packed fruit, although many are also responsible for harvest scheduling, harvest, and raw product assembly activities. Generally, growers enter into various kinds of contracts with packinghouses (handlers) for one or more years. While growers are primarily responsible for producing the fruit, they generally receive the "residual" value that remains after all other marketing charges have been deducted from the selling price.

The majority of handling firms are members of cooperative marketing associations. Handlers (either cooperative members or independents) make many of their own pricing and selling decisions. Over the past thirty years, industry concentration has changed; the predominant marketing organization's market shares have declined substantially.

In addition to performing normal handling operations, many handlers also serve as marketing organizations. In other instances, the marketing of the fruit is done by an entity other than the handler. Thus, a handler is not necessarily a marketing organization. It was reported at the hearing that the number of marketing organizations has increased from six or seven in 1953 to 25 or 26 in 1978.

During the earlier years of the order, a high proportion of sales moved through auction markets. In recent years, an increasing share of the sales has been made on a firm price basis (f.o.b. shipping point). The structure of the buying side of the equation in earlier years tended to put growers and/or handlers at a particular disadvantage due to the uncertainty of the sales. On the other hand, the trend to even more

concentration on the buyers' list (wholesalers, importers, institutional buyers, and vertically integrated retailers) continues to limit the sellers' bargaining strength. Thus, it appears that buyers still have an advantage in trading of a perishable commodity such as oranges. Despite these comparisons, however, the number of participants on both the buying and selling sides is indicative of a highly competitive marketplace.

C. Acreage Trends

Over the time span of the marketing orders there has been a shift in the producing areas due in large part to urbanization but also because of conversion of desert areas to agriculture. This shift in the producing areas has led to a higher concentration in central California and increases in Arizona and the desert area of California, and away from the previous concentration in southern California. In the case of navel oranges, total acreage (which reflects both planting and removal rates) peaked in the mid-1970's and has trended downward since that time. Valencia acreage peaked earlier (in the late 1960's) and has shown the same downward trend as navels. However, high production levels of recent years may be attributed to improved yields and non-bearing acreage reaching maturity (it takes about five to seven years for a tree to reach bearing age).

The definite "bulge" in plantings that occurred in the 1960's may be attributed to a number of factors, among them tax incentives which prevailed at the time. another may have been a perceived favorable export outlook. Still another may have been an overall optimistic financial outlook at the time and an expanding products market that appeared to have considerable unfulfilled potential.

Some suggest that the stabilizing effects of the marketing orders also provided planting incentives. To the degree that an order contributes to improved or stabilized prices, it logically reduces risks. This could tend to make entry into the industry more attractive during an optimistic period and exit from the industry less attractive during a period of gloomy outlook.

Acreage data indicate that the upward trend in plantings ceased years ago and a gradual industry adjustment has begun to take place. In 1981–82 non-bearing acreage of California-Arizona navels represented less than one percent of the total acreage compared to 18 percent at its peak (1966–67) and about one percent of the total acreage of California-Arizona Valencias compared to 24 percent at the peak (1963–64). Similarly, total navel acreage in 1981–82 was reported at 117,396 acres, down six percent from the peak and Valencia acreage, at 79,510 acres, down one-third from the peak. These data indicate at least in part a more pessimistic long-term outlook than existed in the 1960's.

D. Production and Utilization Trends

Due to the increased bearing acreage and improved yields, there has been a strong upward trend in production of both crops. California-Arizona navel crops in 1980–81 and 1982–83 were almost three times the level of the 1940's and 1950's. California-Arizona Valencia crops have shown an upward trend but not to the extent of navels. In addition to the overall upward trend, navel production increased sharply to record highs in 1979–80, 1980–81, and 1982–83. Prior to that time, domestic usage had been in the range of 26 to 38 thousand cars per year. The new level of production was 68 to 84 thousand cars. Consequently, it was not possible to maintain the utilization pattern that existed prior to the production surge. However, the absolute quantity shipped to domestic fresh markets has increased and reached record levels which are about double the amounts of the 1950's. In 1982–83 there were 49,018 cars of navels shipped to regulated markets, 58 percent of the total utilization compared to 22,101 cars in 1953–54, which was 77 percent of the total utilization.

The domestic (regulated) market is the preferred market for both California-Arizona orange crops. The export market is the second preferred alternative and processing is the least desirable. There has been a substantial effort to develop export markets for U.S. oranges but thus far these efforts have produced only limited results because of factors such as tariff preferences, foreign quotas, and random border closings. The processing outlet tends to be a residual outlet. In recent years of high production levels a higher proportion of the crop has been utilized in other than the domestic market.

E. Program Implications

Short-run demand for fresh oranges tends to be relatively inelastic. Thus, even a small variation in shipments can have a great impact on grower revenue. This is the foundation for the use of the orders—to foster market stability and enhance revenue in the short run. It is possible that econometric models could demonstrate the utilization options which will maximize grower returns on a season-by-season basis. However, such models would probably be less precise in measuring effect on long-run grower income. One probable long-run effect of regulation is to slow the rate of adjustment that would occur in the industry absent regulations.

The difference in the results that occur in the short run and long run cannot be precisely measured because of the lack of recent historical non-regulated experience. In the case of California-Arizona navel and Valencia oranges, there is one example. A prior marketing order was terminated in March 1952 and no regulatory authority existed during the entire 1952–53 season. The on-tree value of all sales for the 1952–53 navel crop was substantially below the level of the three preceding seasons. In addition, f.o.b. prices were unstable intraseasonally, ranging from $1.65 per box more than the season average to $0.40 less than the average. In 1951–52, with partial regulation under the marketing order, the range was only $0.38 per box above and below the season average.

The marketing orders for California-Arizona oranges are intended to be a self-help tool for use by industries to affect all factors associated with successful marketing of these crops, such as influences of the other markets (export or procesing) and those associated with long-range planning (tax incentives and overall optimistic financial outlook).

(1) The hearing record contains extensive testimony from industry and nonindustry witnesses who supported the proposal to amend orders to eliminate the prorate provisions. A number of economists testified in favor of this proposal. They suggested, however, that the industry would undergo a radical and severe economic displacement if prorate were abruptly eliminated. For example, several economists testified that, in the short term (2 to 7 years), there would likely be a period of industry readjustment, resulting in a reduction in producer revenue, an increase in price instability, and a reduction of approximately 40,000 to 50,000 acres of California-Arizona orange groves. They suggested that during this same period approximately 2,100 to 7,000 California-Arizona orange growers would likely be forced to abandon orange farming due to radically changed economic conditions. Those most likely to abandon orange farming would include new business entrants who recently pruchased land at high cost and financed at high interest rates and growers who are highly leveraged (*i.e.*, high debt to equity ratio).

The positive aspects of prorate were attested to by several witnesses who observed that from their perspective this

regulatory mechanism guards against extreme fluctuation in supplies and prices, permits more efficient use of labor, equipment, and other marketing facilities, and has generally benefited the smaller producers in the economic marrketing of their oranges. Moreover, without a means of adjusting supply with market requirements, the quantity of oranges available for fresh shipment during a given period (short-term) could greatly exceed market requirements. There could also be instances where insufficient quantities would be available because of crop and market conditions.

A basic declaration of policy in the Agricultural Marketing Agreement Act of 1937 directs the Secretary of Agriculture to establish and maintain such orderly marketing conditions as will provide, in the interest of producers and consumers, an orderly flow of the supply of a commodity throughout the normal marketing season to avoid unreasonable fluctuations in supplies and prices. The allocation of allotment among handlers of navel or Valencia oranges contributes to the orders' objectives of orderly marketing and improving returns to producers by correlating the supply of oranges available for sale in commercial fresh domestic channels with demand in those outlets. Thus, prorates are a valuable tool in achieving the goal of market stabilization for navel and Valencia oranges. Based on the foregoing, it is concluded that prorate provisions tend to effectuate the declared policy of the act and the proposal to eliminate them from the orders is denied. In regard to prorates, however, a number of issues to modify and render more flexible the current procedures are appropriately addressed.

The exception filed by Exeter Orange Company states that: (1) The prorate system is illegal based on an analysis of the legislative history of the Agricultural Marketing Agreement Act of 1937 and the Agricultural Adjustment Act of 1933; (2) the Administrator's recommended decision fails to disclose the data and analysis used to support the findings and conclusions; (3) the decision may have been influenced by ex parte contacts; (4) USDA has demonstrated no special agency expertise; (5) the decision lacks standards and provides imprecise definitions of terms used in the decision; (6) prorate does not establish parity prices; (7) the referendum should provide growers with a meaningful choice on the prorate issue. In addition, the exception discussed referendum procedure issues; (8) the decision fails to contain the required rulings on proposed findings and conclusions; (9) the background information in the decision supports the conclusion that prorate is no longer necessary; (10) the decision fails to give reasoned consideration to prorate alternatives, including generic advertising, a gradual phase-out of prorate, and a combined phase-out with generic advertising; and (11) the decision fails to contain a regulatory analysis required under the Regulatory Flexibility Act and Executive Order 12291. It also refers to requirements imposed by the Paperwork Reduction Act. The exception recommends that the Secretary modify the recommended decision as outlined in the exception or remand the decision to the Administrator for further consideration or additional hearings.

With respect to point (1) in the exception, a principal objective of the act is to establish and maintain orderly marketing conditions for agricultural commodities. Marketing agreements and orders regulate the handling of these commodities for the benefit of the producer and such regulations must be in the public interest. The act has been amended a number of times to expand the list of commodities for which marketing orders may be issued, enlarged the scope of regulating authority, changed provisions regarding parity, and amend other provisions. Volume regulations under these marketing orders are consistent with the act. With respect to point (2), the decision provides a preliminary statement containing a description of the history of the proceedings, and an explanation of the material issues of fact, law, or discretion presented on the record, and proposed findings and conclusions with respect to such issues and reasons therefor. With respect to point (3), the exceptor has provided no basis to show that any communication with the Department was violative of the ex parte rule. USDA denies the contentions and assertions made in points (4) and (5). With respect to point (6), the parity objective stated in the Agriculture Marketing Agreement Act is a goal or maximum, rather than a requirement. The Act also states that the Secretary is obligated to approach parity at as rapid a rate as is deemed to be in the public interest and feasible in view of the comsumptive demand in domestic and foreign markets. With respect to (7), this decision contains an order directing that referenda be held among producers of the regulated commodities on proposed amendments to these marketing orders and the procedures to be observed in such referenda. With respect to point (8), the decision contains a ruling upon each proposed finding or conclusion submitted by interested persons. With respect to point (9), this issue is addressed in the Background Statement, under *Program Implications*. With respect to point (10), the decision fully discusses all of the alternatives to prorate presented on the record. The proposal for generic advertising is discussed in material issue (10) of the decision and alternatives to season-long prorate are discussed in material issues (2) and (5) of the decision. With respect to point (11), requirements under the Regulatory Flexibility Act are discussed below under the exception filed by the Small Business Administration. Inasmuch as this administrative action is governed by the provisions of Sections 556 and 557 of Title 5 of the United States Code, it is not subject to the requirements of Executive Order 12291. The Office of Management and Budget has determined that information collection requirements contained under these orders comply with the Paperwork Reduction Act. On that basis, the exception filed by Exeter Orange Company is denied.

The exception filed by Guimarra Vineyards supports termination of prorate. This exception is denied for the reasons set forth under this material issue.

The exception filed by the Antitrust Division of the Department of Justice indicates tha tthe decision to maintain prorate should be rejected because it: (1) Fails to consider the long-term effects of prorate, (2) ignores misallocation of resources, (3) creates a regulatory treadmill, and (4) fails to consider less costly alternatives, *e.g.*, phase-out of prorate. However, the decision discusses each of these points to the extent that they are included in the evidence of record. The exception fails to recongize modifications and flexibilities of prorate regulation contained in the proposed amendments. For example, the proposed amendment expressly permits termination of seasonal prorate after a specified percentage of the crop has been shipped. This flexibility was initially implemented in regulations covering the 1983–84 season for navel oranges. The exception to reject modified prorate authority is denied.

The exception filed by the Office of Advocacy of the Small Business Administration indicates that the proposed amendments should be withdrawn and reproposed with analysis and changes to minimize the burden on small firms.

A large majority of orange growers and handlers may be considerd small businesses for purposes of the Regulatory Flexibility Act (Pub. L. 96-354 (RFA)). (See earlier *Background Statement.*)

The purpose of the RFA is to fit regulatory action to the scale of businesses subject to such action in order that small businesses will not be unduly or disproportionately burdened. The Agricultural Marketing Agreement Act requires the application of uniform rules to regulated handlers. Marketing orders and rules proposed thereunder are unique in that they are normally brought about through group action of essentially small entities for their own benefit. Thus, both the RFA and the Agricultural Marketing Agreement Act are usually compatible with respect to small business entities. This is true in this proceeding because it deals mostly with small business entities and the regulatory scheme is considered to be the minimum necessary to accomplish the purposes of the orders and the Agricultural Marketing Agreement Act of 1937

As indicated, this decision fully discusses all of the alternatives to volume regulation presented on the record, including no regulation. It is determined that the proposed amendments, as hereinafter set forth, would tend to effectuate the declared policy of the act.

(2) The marketing orders provide that the committees may meet, and recommend to the Secretary, the total quantity of navel or Valencia oranges which they consider advisable to be handled during the succeeding week in each prorate district. Such authority enables either committee to recommend volume regulations to meet market demands and at the same time to reasonably apportion the quantities to be handled among handlers in each prorate district in accordance with the shipping period of such district. In arriving at their recommendations, the committees abtain and consider information with respect to significant factors affecting marketing conditions for oranges. Under the Secretary's discretionary authority, each recommendation of the committee is subject to the continuing right of the Secretary to disapprove it at any time.

The committees hold public meetings in one of the prorate districts each Tuesday during the navel or Valencia orange season to review the current and prospective demand and supply of navel or Valencia oranges. In its review of the market the committees consider, among other things, the quantity of oranges available for sale, the quantity shipped, f.o.b. prices, and shipments of competitive fruits and other domestic citrus. Based on this review, the committees make appropriate recommendations for volume regulation to the Secretary. Historically, the Secretary has reviewed such recommendations and, by regulation, fixed the quantity of fresh navel or Valencia oranges that may be handled domestically for the week which began on Friday of the week of the meeting.

It was proposed at the hearing by CTIMO that the orders be amended to limit the onset of prorate to December 25 for navel oranges and the first Monday in May for Valencia oranges. Also included in that proposal to amend §§ 907.57 and 908.57 was the proposal to limit the issuance of volume regulations for navel oranges to six two-week prorate periods each season and for Valencia oranges to three two-week prorate periods each season.

These proposals would establish regulation on the basis of calendar date rather than on marketing conditions and fruit quality. As proposed, the amendment would likely result in harvesting of increased portions of growers' groves prior to the onset of prorate, and this could cause unstable markets during the period prior to the onset of regulation. The excess volume on the market could also carry over to the prorate period resulting in lesser volumes being shipped until excess supply on the market disappears. Testimony in support of this proposal did not adequately demonstrate why the specific dates or number of weeks were chosen and how they would tend to effectuate the declared policy of the act. Further, the specific dates and length of prorate season cited are not likely to be satisfactory for all marketing years. Crop and weather conditions change annually and such changes must be taken into account in recommending regulations. Therefore, these specific proposals are denied.

Yet to allow increased flexibilities, the orders should be amended to provide authority for the committees to recommend limitations on the number of prorate periods and the beginning and ending dates of prorate. Sections 907.51 and 908.51 should be amended to provide specific authority for the committees to recommend to the Secretary and the Secretary, in his discretion, to approve appropriate rules and regulations setting the periods of time during the season that prorate regulations shall be in effect and/or the date that prorate commenced. This amendment should allow growers and handlers to respond to marketing conditions and ship on the basis of acceptable fruit quality, supply, and demand. However, a specific number of weeks or beginning dates of prorate are not recommended for inclusion in the orders; they would likely prove too rigid.

Briefs were filed by California Citrus Mutual and the committees opposing the CTIMO proposal to modify the prorate provisions of the orders. The briefs both agreed that setting the maximum number of weeks of regulation and the proposed dates of December 25 (navel oranges) and early May (Valencia oranges) for the onset of prorate would result in chaotic marketing conditions and reduce returns to growers. However, as stated, the committees should have the discretionary authority to recommend limits on the use of prorate as current and prospective conditions may warrant.

One exception was filed by CTIMO recommending a gradual elimination of prorate. Specifically, the recommendation would authorize the issuance of prorate only after 20 percent of the crop has been shipped. In addition, no volume regulation would be permitted after 85 percent of the crop has been shipped. The proposal would also decrease the percentage of the regulated crop by 10 percent each year. An exception filed by Harris Farms also supports a phase-out of volume controls.

The Secretary approved the 1983-84 marketing policy for California-Arizona navel oranges with the stipulation that no prorate regulation would be issued after 85 percent of the crop had been shipped in each district. That policy was based on the conditions bearing on the marketing of the 1983-84 crop of navel oranges. Establishment of a regulation percentage of the crop at which prorate shall commence or cease for any given season should be arrived at on the basis of current and prospective crop and market conditions. An exception filed by California Citrus Mutual supports the decision which provides the committees with discretionary authority to recommend on an annual basis the beginning and ending dates of prorate and to recommend the number of prorate periods.

Therefore, the exceptions to require a mandatory phase-out of prorate are denied.

(3) It was also proposed at the hearing that the orders should be amended to provide for two-week prorate periods. Testimony at the hearing from members of the navel and Valencia orange industries indicated that a prorate period of more than one week might be beneficial. Handlers would have advance information on the amount of allotment available to them and this

could permit moe effective planning of their marketing operations. This type of prorate could also permit greater intraseasonal flexibilities for individual handlers, while at the same time protecting the viability of the programs.

However, the committees should not be limited to recommending only two-week prorate periods. Such a requirement would not be responsive to changing marketing conditions. There are intraseasonal peaks and valleys in the demand pattern when one, two, three, four-week or longer prorate periods would be appropriate. An unusual situation such as a freeze in the Florida or Texas citrus producing areas could drastically reduce Florida or Texas shipments and quickly increase demand for California oranges. Likewise, adverse weather conditions in a portion of the country could cause problems in transportation, reducing shippers' ability to move their fruit into certain markets, thereby decreasing shipments to market outlets. For these reasons, nothing should preclude the committees from recommending prorate periods of varying number of weeks to reflect current supply and marketing conditions.

Accordingly, the orders should be amended to authorize the committees to recommend prorate periods of one to multiple weeks in duration. Setting multiple week prorate would require recommending realistic volumes. This would allow handlers the opportunity to develop and maintain effective marketing plans which are likely to be advantageous to both sellers and buyers. The recommendation of unreasonably low prorate volumes which are then increased (amended) upwards, would nullify the effectiveness and intent of multiple week prorate and would be contrary to the policy of the order. For this reason, the committees should carefully review their initial prorate recommendations to the Secretary and make realistic recommendations to the Secretary, thereby significantly reducing or eliminating the need for multiple amendments to prorate regulations.

Several exceptions opposed the proposal to provide authority to establish prorate periods of two or more weeks. The opposition was based on uncertainties in marketing conditions for oranges and the potential for excess shipments of oranges during an extended prorate period. However, other exceptions noted that authorization for multiple week prorate periods should facilitate marketing of the crop and may assist handlers in adjusting to short-term fluctuations. Further, the committee has authority to determine the length of the prorate periods in light of the circumstances existing at the time.

Therefore, the orders should be amended to provide authority to establish prorate periods of one to multiple weeks in duration. Exceptions to the proposed amendment are denied.

(4) Preliminary review of the marketing season begins when a marketing policy is developed by the Navel Orange Administrative Committee (NOAC) or Valencia Orange Administrative Committee (VOAC) staff for review and action by the full committee at marketing policy meetings. Meetings are held in each of the districts to afford maximum industry participation. The marketing policy provides the basis of recommendations for size and volume regulations for the coming season based upon statistical information from each committee and other sources such as the Statistical Reporting Service (SRS), the California Department of Agriculture, and trade publications.

The marketing policy includes information on the projected crop of oranges including the quality and size composition of the crop, estimated utilization of the crop (fresh domestic, export, by-products and otherwise to be disposed of), a schedule of projected weekly shipments, competing supplies of other commodities, supplies of other citrus, level and trend of consumer income, and other information.

The policy contains an anticipated shipping schedule to provide, to the extent possible, a continuous flow of oranges to the fresh domestic market throughout the navel or Valencia orange season. The policy also provides for equity of marketing opportunity, that is, each district subject to the order is permitted to ship a fair quantity of oranges grown in that district under any weekly volume regulation.

The orders require the committees to submit their marketing policies and supporting information to the U.S. Department of Agriculture (USDA) prior to any recommendation for regulation. USDA analyzes this information, with other information, to determine if regulation of the fresh domestic market (including Canada) would tend to effectuate the declared policy of the act.

The recommended decision proposed to require that each committee include an evaluation and recommendation concerning the onset and duration of prorate, the length of the prorate period, and size regulation in its marketing policy. In addition, the decision specified that in order to provide further opportunity for public comment on regulatory actions, the Department will have a summary of the committees' respective marketing policies published in the Federal Register. Information gathered through such such a process should aid the Department in evaluating the respective marketing policies and the need for, or level of, regulation for the ensuing season.

A number of exceptions opposed inclusion of additional requirements in the marketing policy statement. The principal concern is that there is insufficient information available at the time the marketing policy is adopted to make such evaluation and recommendations. The exception filed by CCM was opposed to the Department's intention of publishing a summary of the marketing policy for public comment. However, the exception indicated that if the policy summary is published, it should be made clear that the policy is subject to change.

These exceptions are addressed by the fact that there is expressed authority for the committees to revise the marketing policy to reflect changed conditions. As indicated, the purpose of publishing a summary of the marketing policy is to gather information from the public to aid the Department in evaluating the marketing policy. Public comment on the published marketing policy summary will be requested well in advance of the beginning of the shipping season. The Department intends to complete its analysis of the marketing policy, and any public comment thereon, prior to the beginning of the season. Federal Register publication of the marketing policy summary is not required by the order and the procedure is not intended to create any legal obligations or rights, either substantive or procedural.

(5) At the time the 1983–84 marketing policy for navel oranges was recommended, the Navel Orange Administrative Committee committed itself to recommending open movement after a fixed percentage of the crop in each district had been shipped. The Secretary concurred with this approach. Based on such approach it is recommended that the committees consider annually recommending open movement after a specific percentage of the crop has been shipped in each district. Such recommendation must be made at the time the committees formulate their marketing policies and be included in that marketing policy.

Exceptions to this proposed amendment indicated that the orders should require open movement after 85 percent of the corp has been marketed.

These exceptions are denied for the reasons outlined in material issue (2). The orders should provide for recommendation of such percentage by the committee and inclusion in the annual marketing policy.

(6) Testimony at the hearing indicated that the orders should permit exemption of a specific size or sizes of oranges from the prorate provisions when economic or marketing conditions so warrant. Such testimony was in reference to (but not necessarily limited to) the strong demand for large size navel oranges prior to the Christmas holiday season.

The navel and Valencia orange marketing orders contain provisons authorizing regulations limiting the sizes of oranges which may be shipped to fresh domestic market. Shipments of excessive amounts of unusually small or large size oranges result in price discounting, which tends to depress prices and returns for all sizes. In addition, some oranges are so heavily discounted that they do not pay the direct costs of harvesting and marketing.

The limitation of small or excessively large sizes of oranges contributes to the orders' objectives of orderly marketing and improving returns to producers by limiting discounting and by maximizing the quantity of desirable sized oranges shipped to the fresh domestic market. Historically, the committees have recommended, and the Secretary has issued size regulations, which have prohibited the shipment of specific large or small sizes of oranges. The committees have never recommended exemptions of any sizes of oranges from volume regulation, perhaps in part because of uncertainty as to whether the current provisions included authority for such action. However, an exemption of specific sizes of oranges from prorate provisions is authorized. Moreover, such regulation may also be made on a prorate district basis, because of the varying size composition of oranges grown in various districts.

Several exceptions were opposed to the authority to exempt a specific size or sizes of oranges from volume regulation. For instance, the exception filed by Exeter Packers and Paramount Citrus suggested that "unlimited shipment of a size of orange should only be allowed during a period of volume regulation if the increased volume from the sale of exempted oranges does not affect the demand for, and thus indirectly the price of, oranges still subject to volume regulation." The exception filed by LoBue Bros., Inc., suggested that exemption of certain sizes of oranges from volume regulations would be counter to the basic percept of equity of marketing opportunity. The exception indicated that this would result in volume regulation of the undesirable sizes.

However, when making recommendations for size regulation under § 907.63 and § 908.63, the committees are required to give due consideration to the factors described in § 907.51(b) and § 908.51(b), including consideration of equity of marketing opportunity and market prices and supply conditions. Thus, the committee would take equity of marketing opportunity and supply and demand conditions for different sized oranges into account in their deliberations on any recommendation for exemption of certain sizes of oranges from volume regulation. Therefore, exceptions to the proposed amendments are denied.

(7) Under the orders, an individual handler's allotment is such handler's proportion of the limited quantity which may be shipped from the particular prorate district in any week. The method of allocating share requires a precise determination of the quantity of oranges currently controlled by each handler. Prorate base for each handler is calculated as the ratio of the total quantity of oranges available for current shipment controlled by each handler in such prorate district to the total quantity of oranges available for current shipment controlled by all handlers in the prorate district. Allotment for each handler is determined by applying each handler's prorate base to the amount of oranges to be shipped from each district each week under either marketing order.

The orders currently require handlers to provide the respective committees with an estimate of their tree crops. It is necessary that such estimates be as accurate as possible. However, in the event of an error, omission, inaccuracy, or inadequacy, there should be a specified procedure to be followed in correcting any such errors. Such procedure should include a written notification to the handler of the problem and afford the handler an opportunity to explain any questioned information.

Currently if either committee receives an application for prorate base that contains an error, omission, inaccuracy, or inadequacy, the committee is burdened with the responsibility of correcting such or providing a proper crop estimate. There is no procedure delineated whereby the committees can return such application to the handler for correction or completion. To provide a specified and uniform procedure, §§ 907.53 and 908.53 should be amended to require that estimates included in prorate base applications be in units of measure designated by the committees. Handlers would be required to include in their estimates the quantity of oranges available for current shipment from each grove (or portion thereof). Thus, the orders should authorize the respective committees to recommend appropriate rules and regulations for the Secretary's approval to implement this change.

In carrying out these provisions the committees, through their designated employees, would have access to premises and records of handlers and may conduct a physical inspection of orange groves for purposes of verifying handler estimates or otherwise ascertaining the quantity of fruit available for shipment. If a handler does not permit such inspection, the committees would be unable to compute and issue the prorate base for the handler.

An exception filed by CTIMO recommends that a neutral party (*e.g.*, California Crop and Livestock Service) be part of the crop estimation process. The exception suggests an appeal procedure to resolve crop estimate disputes between a handler and the respective committee through a 4-member panel made up of one committee employee, two of the handler's peers, and a neutral party.

The proposed change in the prorate base computation procedure is designed to improve crop estimation by the handler and consequently handler prorate bases should be more accurate. NOAC/VOAC employ trained field staff to resolve crop estimate disputes between the committees and a handler. Moreover, information furnished to the committees, including data on which to compute a prorate base for the handler, is confidential and could not be disclosed to the handler's peers or neutral parties. Therefore, this exception is denied.

(8) Sections 907.56 and 908.56 of the orders should be amended to authorize handlers to carry forward without forfeiture of allotment, undershipments of allotment, other than early maturity allotment, to the next two succeeding weeks unless the committee recommend and the Secretary approves a shorter or longer period. Carry-forward of undershipments of a handler's allotment is currently limited to the first succeeding week following the week in which the undershipment occurred. Undershipped allotment which is not used or loaned to another handler is forfeited. Handlers seek to avoid forfeitures of allotment beacuse such forfeited allotment is irrevocably lost. The record indicates the desirability of

extending the period for which undershipments may be carried forward to cope with unusual circumstances. For example, adverse weather may hamper harvesting operations to the extent that a handler has insufficient fruit for shipment and does not use the full amount of allotment.

The orders should be amended to authorize the Secretary, based upon committee recommendations, to increase or decrease the number of weeks that undershipments of allotment may be carried forward as experience is gained in the administration of these provisions. For example, it may be desirable to increase the number of weeks in the undershipment carry-forward period to mitigate the impact on the market of handlers shipping unsold fruit simply to avoid forfeitures of allotment. Also, it may be prudent to limit the number of weeks the undershiment may be carried forward in the event that multiple week prorate periods are instituted and carry-over of undershipped allotment is sufficiently large in the aggregate to cause market disruption. The committees should also be authorized to recommend increasing or decreasing the number of weeks over which undershipments of allotment may be carried forward for other good and sufficient reasons. Any changes in these provisions should be recommended by the respective committee as near to the beginning of the particular marketing seasons as possible and should be applicable to the entire season unless unusual circumstances warrant intraseasonal changes in carry-over of undershipments affecting a portion of the season. Therefore, in order to provide additional flexibility to handlers in marketing their fruit, the orders should be amended to authorize the respective committee to establish, with the approval of the Secretary, the number of weeks that undershipments of allotment may be carried forward into succeeding prorate periods, but in the absence of recommendation the period for carrying forward undershipments will be two weeks.

A proposal was advanced at the hearing which would delete provisions concerning forfeitures of allotment and allow a handler to "bank" any unused portion of an allotment. Testimony suggested that the proposed amendment would add stability to the marketing of oranges. Whatever its other merits, the proposal and the evidence thereon lack sufficient precision with respect to allotment banking to be workable, *e.g.*, requirements governing deposits and withdrawals of allotment and other administrative details. Therefore, the proposal is denied.

The exceptions filed by Western Growers Association, Sunkist Growers, Inc., and NOAC/VOAC were all opposed to carry-forward of undershipments on the basis of opposition to proposed multiple week prorate periods. For instance, the exception by Western Growers Association indicated that the provisions for carry-forward of undershipment should only be operative if the prorate period is based on a single week.

The exception by CCM supports a change in carry forward of undershipments except that the minimum should be set at two weeks. The exception also supports changes in proposed amendments of § 907.56 and § 908.56 to reflect the possibility that a prorate period could be longer than two weeks. The exception by CTIMO supports the proposal on carry-forward of undershipments and believes it should be made mandatory.

A review of the record clearly indicates that each handler should be able to carry forward undershipments of allotment for two weeks and the committees should be vested with discretionary authority to establish, with the approval of the Secretary, a different carry-forward period. However, the Secretary would require strong justification to return to a one-week carry-forward period. Therefore, the exceptions are denied.

(9) California Citrus Mutual proposed at the hearing that the orders be amended to authorize the inclusion of shipments of fresh navel and Valencia oranges to Mexico as a part of a handler's prorate. Historically, such shipments have not been a part of a handler's prorate quantity. Mexico is not included in the "domestic" market because sales of navel or Valencia oranges to Mexico do not directly compete with sales in the continental U.S. or Canada.

Several witnesses stated that the current orders provide opportunities for handlers to violate the terms of the marketing orders by rerouting to the domestic market fruit which was originally destined to Mexico. However, any such opportunity to violate the orders does not warrant a potentially significant increase in the orders' regulatory authority such as that which would occur by including shipments to Mexico as part of a handlers' prorate quantity. Compliance problems associated with shipments of oranges to Mexico should be directly addressed by reviewing or strengthening the reporting requirements associated with such shipments, not be establishing regulation in a market which differs in many characteristics from the domestic market. For these reasons, the proposal to permit inclusion of shipments to Mexico in a handler's prorate is denied.

CCM filed an exception requesting that denial of the proposal to include shipments of oranges to Mexico under volume regulation be reconsidered based on additional information attached to the exception. The exception suggests that while inclusion of shipments to Mexico under prorate will increase the scope of regulation, the alternatives would involve additional inspection and reporting requirements which will increase regulatory activity.

All of the record evidence bearing on the issue of exempt shipments of oranges to Mexico was carefully examined. Based on such evidence, it is concluded that compliance with regulations can be effected by strengthening reporting requirements rather than including shipments to Mexico under regulation. The revised handler reporting requirements do not contemplate inspections of fruit at the Mexican border and should not substantially increase regulatory burdens on handlers. The act expressly provides for criminal and civil enforcement actions in the federal courts against persons who violate such orders. Therefore, the exception is denied.

The exception filed by CTIMO requests exclusion of shipments to Canada under volume regulation. The exception suggests that proration of shipments should not apply to foreign countries. With respect to shipments to Canada, the Canadian market is considered part of the domestic fresh market for oranges. No evidence was offered at the hearing to show why regulation of shipments of oranges to Canada should not be covered. Therefore, this exception is denied.

(10) Sections 907.33 and 908.33 of the orders should be amended to authorize the committees to participate in market promotion projects for navel and Valencia oranges, including paid advertising. The primary objectives of such projects are to promote consumer awareness, increase per capita consumption, and improve producers' returns for fresh California-Arizona navel and Valencia oranges. The committees should have the authority to decide, subject to the approval of the Secretary, the particular types of advertising and publicity projects that should be employed, singly or in combination, to attain their objectives.

Such projects should include such promotional techniques as publicity, education, merchandising, dealer service work, and newspaper, radio, television, and magazine advertising as may be necessary considering the circumstances existing during the particular season or anticipated in future seasons. The expenses of such projects shall be paid from funds collected pursuant to §§ 907.41 and 908.41. Addition of this authority to the marketing orders does not compel the committees to initiate market promotion projects, but merely provides the necessary authority in the event such action is deemed advisable.

The brief filed by the committees in opposition to this amendment maintained that no data was presented at the hearing which demonstrates that such authority would be effective for the navel and Valencia orange industries. Yet evidence indicates support for such authority under the orders. Based on the record, it is concluded that the orders should be amended to provide authority for market promotion, including paid advertising, for oranges.

Sunkist Growers, Inc., filed an exception opposing a generic advertising program due to lack of information on anticipated costs or likely benefits to be derived from such program. The exception states that a generic advertising program without brand credits would impose an unfair burden on Sunkist growers.

The exception filed by CCM requests that paid advertising authority be mandatory. The exception also requests that advertising programs be administered by an independent advertising committee. The exception proposed the membership composition of such committee.

The exception filed by CTIMO requested that paid advertising authority be mandatory with no brand credits.

The exception filed by Western Growers Association indicated that the paid advertising program should not be administered by NOAC and VOAC. The exception offered no precise method of implementing a generic advertising program.

The exception filed by NOAC and VOAC opposed generic advertising authority and indicated that no data was presented on costs, scope of program, or why current individual advertising is not sufficient to met the needs of the industry.

As the discussion above makes clear, the amendment permitting generic advertising would merely provide the committees with authority to adopt such a program in their discretion. Since the amendment is permissive, and does not mandate generic advertising, the exceptions filed by Sunkist, NOAC, and VOAC, which argue the merits of generic advertising, do not address the proposal at issue here. These are questions that can be raised before the committees in the event that such advertising programs come under consideration. CCM and CTIMO have raised exceptions to permissive authority and ask that paid advertising authority be made mandatory. We believe that the advisability of such advertising programs will depend on presently unpredictable market events and conclude that the committees are in the best position to consider the pros and cons of implementing such programs and the manner of doing so. For these reasons, we deny all of these exceptions as well as those that request that generic advertising programs not be administered by the committees. The orders therefore will provide for authority for the committees to use generic advertising in their discretion.

(11) Sections 907.54 and 908.54 of the marketing orders should be amended to provide authority, through rules and regulations, which would permit each handler to receive, in addition to other allotment and overshipment allowances, a special allotment designated as "marketing incentive allotment." Such allotment would be available to handlers to be used in conjunction with the handler's market development programs. The record indicates that lack of available allotment has at times inhibited some handlers from participating in such programs. Additional allotment in the form of marketing incentive allotment should provide handlers with the necessary flexibility to take advantage of special marketing opportunities.

The precise quantity of marketing incentive allotment to be issued to handlers and the period of time during which such allotment may be used should be established by regulation recommended by the respective committees and approved by the Secretary. One proposal suggested that marketing incentive allotment be fixed at 20 percent of a handler's allotment during a specific prorate period. The committees should consider such proposal and other options which would promote handler initiative in marketing oranges consistent with the objectives of the orders. Furthermore, nothing should preclude the committees from recommending, and the Secretary approving, limitations on the use of marketing incentive allowment if such use would be counterproductive to the objective of orderly marketing of oranges.

The recommended decision proposed that marketing incentive allotment provisions be implemented by rules and regulations recommended by the respective committee and approved by the Secretary.

The exception filed by CACL opposes complex procedural requirements for issuing marketing incentive allotment. Similar views were expressed in exceptions filed by CCM, NOAC and VOAC, CTIMO and Sunkist Growers, Inc. The exceptions filed by Exeter Packers and Paramount Citrus expressed concern that the Secretary would mandate the types of programs for which marketing incentive allotment may be used.

On the basis of the exceptions it is concluded that the orders should be amended to provide that handlers do not need prior committee approval to receive marketing incentive allotment. However, the committees should be notified of the intended use of marketing incentive allotment by handlers. Such notification procedures should be recommended by the committees and handlers should be advised accordingly as early in the beginning of a crop year as practical. Any rules and regulations the committees recommend to implement these provisions should be simple and minimally burdensome. They may require that a handler, after utilizing each marketing incentive allotment, provide the committees with sufficient information to determine how the allotment was use.

The exception filed by Belridge requests that marketing incentive allotment authority be made mandatory. Exceptions by CCM and CTIMO both request that marketing incentive allotment be fixed at a minimum of not less than 20 percent of a handler's prorate for use not less than 3 times per season.

The orders should be amended to provide handlers with marketing incentive allotments of not less than 10 percent of handlers' prorate which shall be available for use during three prorate periods each season. The committees may recommend that the Secretary establish a higher percentage of handlers' prorate and more prorate periods during which marketing incentive allotment may be used. To reflect these changes, § 907.54(d) and § 908.56(b) are revised as hereinafter set forth.

The orders currently permit handlers to overship their weekly allotment by an amount equivalent to 20 percent of such allotment, or one carload, whichever is

greater. The marketing incentive allotment is in addition to the handlers' allotment and overshipment tolerance. To promote handler participation in market development efforts, marketing incentive allotment should not be deducted from a handler's allotment in succeeding weeks. However, the record indicates that it may be desirable to provide for a deduction against the quantity of oranges which a handler has available for current shipment in the event that the handler fails to use all or a portion of the marketing incentive allotment issued or uses the marketing incentive allotment for other than the purposes specified. For example, a quantity of oranges equaling the full amount of marketing incentive allotment issued but not used in a promotional program could be deducted from the quantity of oranges which the handler has under contol. Provision for such deduction should discourage handlers from inflating requests for marketing incentive allotment. In addition, inappropriate use of marketing incentive allotment, e.g. shipping a percent of that allotment to markets other than those approved to receive marketing incentive allotment, should result in a corresponding reduction in the handler's tree crop. Such provision should discourage handlers from shipping their marketing incentive allotment as rollers (unsold fruit without a specific destination) or for other than approved purposes. In making their determination on this matter, the committees should review handler documentation and records regarding the use of marketing incentive allotment as well as other information submitted to the committees. Moreover, marketing incentive allotment should be used during the prorate period for which it is issued and since such allotment is for special purposes of individual handlers it cannot be loaned or transferred to other handlers. The committees may recommend, and the Secretary may, at this discretion, establish rules and regulations as are necessary to administer these provisions.

An alternative marketing incentive proposal was advanced at the hearing. This proposal would provide a handler exemption from volume regulation for the promotion of oranges in an amount equal to 10 percent of the handler's tree crop. The proposal would also provide procedures by which handlers would notify the committees of the use of such exempt oranges and specify that handlers submit reports to the committees one week after such shipment. This proposal would permit the full amount of the marketing incentive allotment to be used at any time during the season including the initial prorate periods. The proposal contains significant deficiencies in terms of assuring regulatory compliance since: (1) Prior to the committees' determination of the handlers' tree crop handlers may use their own estimates of tree crop in calculating the total quantity exempt from regulation and any error in the handlers' estimate of tree crop results in a corresponding error in the quantity to be exempted; (2) handlers would report to the committee the quantity shipped under exemption one week after shipment which would preclude disclosure of any error or miscalculation until after the shipment had been made; and (3) the possibility that many handlers responding simultaneously and strongly to some market phenomenon in a single period could have a disruptive and price depressing influence on the market caused by the sudden appearance of large volumes of fruit. In view of this, and the flexibilities contained in the marketing incentive provisions which have been recommended for inclusion in the orders, this alternative marketing incentive proposal is denied.

The brief filed by California Citrus Mutual opposed the recommended marketing incentive provisions on the basis that: (1) The effect of the marketing incentive allotment provisions could be negated by committee action with respect to the prorate recommendations; (2) penalty provisions for nonuse of incentive allotment could be excessive, and (3) provisions do not limit the number of periods in which incentive allotment can be used. The brief expressed support for a modified marketing incentive proposal.

With respect to prorate recommendations, the committees currently recommend the quantity of oranges which they deem advisable to be handled in a prorate period. They submit such recommendations to the Secretary together with the supporting data for that recommended quantity. Marketing incentive allotment is a separate allotment to be issued for special purposes, *i.e.*, development and expansion of markets, and would not be included in the committees' prorate recommendations. In this respect, the proposal is similar to overshipment provisions under these orders. As to repayment of marketing incentive allotment, such provisions may be instituted under administrative rules and regulations if conditions warrant. However, there would be no deduction of marketing incentive allotment from the handler's tree crop except if the handler fails to use the marketing incentive allotment issued or fails to use such allotment for the purposes authorized.

On the basis of the record, it is concluded that the marketing incentive provision discussed above should be added to these orders.

The exception filed by CTIMO suggests that no penalty be provided for handlers not using marketing incentive allotment. The penalty contemplated is a deduction from a handler's tree crop for marketing incentive allotment requested but not used for other than approved purposes. The record indicates that such provision is needed to prevent abuses of the program and should be retained. Therefore, this exception is denied.

(12) Sections 907.60 and 908.60 of the respective orders should be amended to change provisions governing the allocation of early maturity allotment among handlers. Early maturity allotment is issued to handlers who have oranges which are mature prior to the time of general maturity of oranges and who make application for such allotment. The provision for early maturity allotment is included in the orders to facilitate the issuance and use of allotment at the time when the handlers do not have oranges of sufficient maturity for immediate handling.

Currently, whenever the committees deem it advisable to grant the full amount of early maturity allotment requested by handlers, they allocate such allotment on the basis of requests. However, when less than the full amount of early maturity allotment requested is granted, the requests of each handler are granted in the same proportion as the handler's tree crop is to the tree crop of all requesting handlers. Under this procedure, problems have arisen in allocating the reduced early maturity allotment among handlers who control a high percentage of early maturity oranges relative to their tree crop vis-a-vis handlers controlling a small percentage of early maturity oranges relative to their tree crop. In this situation, the procedures for allocating early maturity allotment on the basis of a handler's tree crop could result in proportionately less early maturity allotment for early maturity fruit handlers with a smaller prorate base. One alternative approach which was suggested at the hearing would allocate early maturity allotment proportionately among requesting handlers so that each handler would have an equal share of early maturity

allotment irrespective of total tree crop controlled by a handler.

The record indicates that allocating early maturity allotment on the basis of requests is feasible if requests for early maturity allotment accurately reflect the needs of handlers for such allotment. In fact, however, some handlers apply for more early maturity allotment than they intend to utilize during the period for which such allotment is requested while other handlers apply for early maturity allotment in the amount they desire to ship. In this situation, proportionate reduction of handlers' request can result in total shipments of early maturity oranges in amounts less than market requirements.

The orders currently allow for a reduction from the handler's tree crop in an amount equal to the amount of unused early maturity allotments. However, as indicated, this provision has not deterred some handlers from requesting more early maturity allotment than they can use. Therefore, the orders should be amended to permit a greater reduction of a handlers's tree crop for failure to use early maturity allotment. The record indicates that a limit should be placed on the maximum amount of tree crop reduction for nonuse or early maturity allotment. A reduction not exceeding twice the amount of unused early maturity allotment appears reasonable and should deter handlers from inflating requests. The record indicated that the applicable administrative procedures to effect adjustment of a handler's tree crop for nonuse of early maturity allotment should be established in rules and regulations recommended by the committees and approved by the Secretary.

There were several objections to this proposed amendment. The principal objection was that the precise rules and regulations for allocating early maturity allotment had not been fully defined at the hearing. The record evidence indicates that the proposal is designed to provide the committees with the basis for recommending an alternative method of allocating early maturity allotment if the circumstances warrant. If a specific recommendation is made, interested persons would be afforded an opportunity to file comments under informal rulemaking proceedings.

The orders now provide for transfer of early maturity allotment among handlers who received early maturity allotment in the same weekly period. Any such transfer by handlers must be approved by the committees. Such provisions should be retained except that transfers or early maturity allotment should be arranged by the committees to facilitate such transfers and assure compliance with these provisions. Consistent with the proposal the reference to the transfer or issuance of early maturity allotment on a prorate district basis should be deleted from these provisions.

Under the terms of the orders handlers general maturity allotment are based on the relative quantity of the total tree crop which each handler controls in the district. The determination of each handler's tree crop is made by the respective committee at the beginning of the season and subsequently adjusted to correct errors, omissions or inaccuracies and to reflect gain or loss of control of oranges by each handler. Shipments of oranges made prior to general maturity are not deducted from the handler's tree crop base. One witness maintained that the failure of deduct shipments of early maturity oranges and other fruit utilized prior to general maturity from prorate base calculations affords certain handlers with the opportunity for so-called "double-dipping," *i.e.*, earning prorate on oranges shipped prior to general maturity. This witness offered a proposal to amend the navel orange order to require the deduction of shipments of oranges made prior to general maturity from handler's tree crop and the tree crop so adjusted would serve as the basis for computing prorate base and general maturity allotments.

The proponent reviewed the history and operation of the early maturity provisions and introduced several exhibits, including USDA documents, relative to amendments to these provisions which became effective in 1962. The 1962 amendment deleted the requirement for offsetting early maturity allotment after general maturity had been reached. The purpose of the 1962 amendment was to encourage handlers to ship early maturity fruit before the general maturity period. Record evidence indicates that the entire industry benefits from the early shipment of oranges since this reduces the quantity of oranges that must be marketed after the oranges attain general maturity. However, the evidence also indicates that some changes have occurred in the industry with respect to early maturity fruit, including development of newer varieties of oranges which mature earlier. Based on changing conditions, the committee should be empowered to recommend the deduction of shipments of oranges made prior to general maturity from handler's tree crop bases. Prior to making any such recommendation, the committee should thoroughly evaluate the need for making changes in the current prorate system and the economic impact on growers and handlers of such a change. In addition, because both orders are likely to deal with similar situations with respect to early maturity oranges, it is recommended that the Valencia order also be amended to provide the same authorization.

The exception filed by Western Growers Association opposes deduction of early maturity allotments from handler's tree crop for purposes of determining general maturity allotments. The exception indicates that such deduction will penalize growers with early maturity fruit who, because of the naturally advanced maturity of the fruit, cannot benefit from open movement in the later part of the season. The exception filed by Exeter Packers and Paramount Citrus requests that the provision requiring deduction of oranges shipped prior to general maturity be made part of the orders rather than implemented through rules and regulations as recommended in the Administrator's decision. The exception also requests that the provision state that the deduction include both early maturity allotment and fruit shipped under open movement to regulated fresh domestic and Canadian markets. The exception filed by NOAC and VOAC requests that any or all oranges shipped prior to general maturity could be deducted from a handler's tree crop base for computing general maturity allotment. The exception requests a clarification in § 907.60 and § 903.60 to so provide. The exception filed by CTIMO requests that changes in provisions on early maturity allotment be made mandatory.

Based on the record evidence, it is concluded that any deduction of shipment made prior to general maturity from a handler's tree crop be implemented through rules and regulations. Therefore, the exception against such deduction or for mandatory deduction are denied. The proposed amendment of § 907.60 and § 903.60 specifies in part "Such rules and regulations may require that upon reaching general maturity, allotment issued for early maturity oranges shall be offset against the oranges available for current shipment of any handler and may provide for other appropriate modifications and adjustments necessary to carry out these provisions. The intent of the phrase "other appropriate modifications and adjustments" is to allow for deduction of all or a part of open movement shipments, in addition to early maturity shipments. But, for clarification, the

proposed amendments are changed to make such intent clear.

Belridge filed and exception suggesting that handlers should not be unduly penalized for failure to ship early maturity allotment. The exception filed by CCM opposes changes in penalty provisions for nonuse of early maturity allotment. The CCM exception supports allocation of early maturity allotment on the basis of the amount of such allotment requested.

The orders currently permit allocation of early maturity allotment in proportion to the amount requested by handlers whenever the full amount of early maturity allotment requested by handlers cannot be granted. However, the evidence indicates that such method of allocation is feasible only if a procedure exists to deter handlers from inflating their requests for such allotment. Provision for deducting up to two times the amount of early maturity allotment requested but not used from the applicant's tree crop is necessary to carry out such method of allocating early maturity allotment. However, any increase in the amount of deduction for unused early maturity allotment would have to be recommended by the committees and approved by the Secretary. The exceptions opposing such deduction are denied.

(13) Sections 907.21 and 908.21 should be amended to provide that membership on committees be limited to three consecutive two-year terms of office. Thereafter, an individual would have to be off the committee, as a member, for a two-year period before being eligible to be nominated to a committee member position. Moreover, such individual could not serve as an alternate during such two-year period.

Current provisions of the orders do not limit the number of two-year terms that members of the committees may serve. However, to promote increased industry participation and involvement in the administration of the marketing orders in question it is concluded that a limitation on the maximum number of consecutive terms of office is appropriate.

Many witnesses testified in regard to the limitation on the number of terms of office members of the administrative committees should serve. Such proposals on tenure ranged from three to ten years; modification of the two-year term was also suggested. However, the evidence suggests that six consecutive years (three two-year terms) is the maximum amount of time that an individual should serve and that the present two-year term of office is satisfactory. This period allows sufficient length of time for a member to become thoroughly familiar with the operations, role and functions of the respective committees to a degree necessary to insure administrative continuity. At the same time, a maximum of six years of consecutive service will readily promote member turnover and achieve greater industry participation in committee activity.

To implement this change promptly, any member of the NOAC who has served three consecutive two-year terms ending September 30, 1984, would not be eligible to be nominated again for a member or alternate position on the NOAC until nominations are made for the term beginning October 1, 1986. Any member of the VOAC who has served three consecutive two-year terms ending January 31, 1986, would not be eligible to be nominated again for a member or alternate position on the VOAC until nominations are made for the term beginning February 1, 1988. Members who have served for three consecutive terms are prohibited from serving as alternates for the next two years in order to prevent circumvention of the purpose of the limit in tenure for full members and to promote increased industry participation. It is intended also that the limitation on tenure be based upon periods of full two-year terms.

Elimination of the first sentence in §§ 907.21 and 908.21 is also recommended to remove obsolete language. Those sentences established the first terms of office for members when the orders were established in 1953 and 1954.

The exception filed by Exeter Packers and Paramount Citrus and CCM request that a member of the committee having served three consecutive terms be precluded from serving as an alternate for the following term. As indicated above, this exception is granted. The exception filed by CTIMO requests that committee tenure requirements apply to alternates as well as to members. The exceptions filed by NOAC and VOAC and Sunkist Growers, Inc., oppose applying tenure requirements retroactively.

The rationale for prompt implementation of the tenure requirements for committee members and the applicability of such requirements to alternate or additional alternate members is discussed above.

(14) The orders should be amended to require periodic continuance referenda. Periodic referenda would provide the orange industries with a means of regularly reassessing the level of producer support for these orders. Testimony presented by a witness for the committees favored amending §§ 907.83 and 908.83 to provide that a referendum be held no later than ten years following the effective date of these amended sections, and every ten years thereafter, to ascertain if growers favor continuance of the respective orders. Such testimony also indicated that if a continuance or affirmative amendment referendum were held within such ten year period, the next periodic continuance referendum would be held by August 1 (navel oranges) and October 15 (Valencia oranges) of the tenth year following such referenda. The committees' witness also proposed changing a provision in the current orders (§§ 907.83(c)(2) and 908.83(c)(2)) when continuance is not favored by three-fourths of the producers or by producers of two-thirds of the volume of oranges produced during a representative period. The committees' witness proposed that the orders be amended to authorize termination of the orders on the basis prescribed in § 608c(16) of the act, *i.e.*, if termination is favored by a majority of the producers who have produced more than 50 percent of their volume of oranges produced for market during a representative period.

Testimony was offered by a witness representing CTIMO stating that the orders should be amended to provide that a mandatory continuance referendum be held not less than every three years. The witness suggested that such amendment should provide for a continuance referendum within 120 days from the date the committees receive and certify a petition signed by at least five percent of the industry's growers requesting a referendum.

Based on evidence and testimony submitted at the hearing relative to period referenda, the orders should be amended to include such a requirement. However, holding a continuance referendum each three-year period is too short a period because the level of grower support for the orders is not usually subject to dramatic changes over a relatively short period of time. On the other hand, the ten-year period seems to be too long an interval between regular referenda. Therefore, those proposals are denied. However, a period of six years between referenda appears to be desirable and satisfactory. Thus, the orders should be amended to provide that a continuance referendum be held by August 1 (navel oranges) and October 15 (Valencia oranges) of the sixth year following the effective date of this section and each six thereafter without specific requirements calling for a special referendum. Also, if as proposed, five percent of the growers could request a referendum, the

Secretary could constantly be engaged in conducting continuance referenda. This would be costly and unnecessary because the amendment adopts a referendum every six years. Therefore that proposal is denied. In the event there is a demonstrated reason, including a significant number of petitioners, the Secretary can hold a continuance referendum at any time.

It was proposed by the committees that if a referendum on amendment of the orders was held within the designated period of time (originally ten years as recommended by the committees), then the next continuance referendum would be held by August 1 for navel oranges and by October 15 for Valencia oranges of the tenth year following such referendum. This proposal to postpone an otherwise regularly scheduled referendum would tend to negate the purpose of a periodic continuance referendum. For that reason, and because amendatory referenda do not necessarily reflect grower sentiment regarding the entire program, a regularly scheduled referendum on termination of the orders should be held regardless of whether amendatory referenda are held during any prior six-year period.

A committee witness testified in support of the committees' proposal to change the number of producers required to approve termination of the orders. Such recommendation would change the requirement from continuance as defined in the orders, of three-fourths of the producers by number or two-thirds of the producers by volume, to termination by a simple majority by volume and number of the growers. It was revealed under cross-examination that such change would give the major cooperative marketing organization the ability effectively to control the outcome of any such referendum by bloc-voting. This proposed change would soften the requirements at a time when the orders remain controversial and their support is often challenged or questioned. Thus, no change is recommended in the percentage required for continuance of the orders and that proposal is denied.

The exceptions filed by Belridge and CCM both suggest if 15 percent of the growers petition for a continuance referendum, the Secretary must grant it. The exception filed by CTIMO supports that view and adds that growers of 15 percent of the producing acreage may also petition for a continuance referendum.

The recommended decision denied the proposal offered at the hearing to conduct a continuance referendum if five percent of the growers request such a referendum. Although it is most probable that the Secretary would hold a continuance referendum if requested by a significant percentage of the growers (*e.g.*, 15 percent) the orders should not mandate that such referendum be held. Therefore, these exceptions are denied.

The exception filed by Exeter Packers and Paramount Citrus request that the orders be continued unless a majority of the growers vote against such continuation. The exception filed by NOAC and VOAC and CACL suggest that periodic referenda procedures should be based on termination provisions as specified in the Act (*i.e.*, when the Secretary finds that such termination is favored by a majority of the producers, who produced more than 50 percent of the volume of the commodity). However, these orders require that continuation be favored by the same number of growers and volume of production as provided in the Act for promulgation or amendment of orders covering California citrus fruits (*i.e.*, at least three-fourths of the producers voting in the referendum or by producers of at least two-thirds of the volume of the crop produced for market). The decision correctly concludes that continuation of these orders should continue to require the higher voting requirement because of the controversy surrounding these programs and the fact that one cooperative marketing organization controls more than 50 percent of the volume of oranges handled and may control the outcome of any such referendum by bloc-voting. The exceptions requesting a less restrictive voting requirement are denied.

(15) Under the orders, the administrative committees are composed of growers, handlers, and a nonindustry member. Growers and handlers affiliated with the major cooperative marketing organization, other cooperative marketing organizations, or independent growers, (*i.e.*, not affiliated with any cooperative marketing organization) are allocated a specific number of positions on the committees.

It was proposed at the hearing by CTIMO that the orders be amended to establish administrative committees composed solely of growers (nine members) and public members (two members) and revise voter eligibility and other procedures. Testimony in support of this proposal did not adequately demonstrate the need to exclude handlers from the committees, nor did it fully explain how growers would obtain or interpret the marketing information and expertise currently supplied by handler members. The proposal was also ambiguous as to how grower representation on the committees would be apportioned among the production areas and how an additional public member would be beneficial to the orders. Therefore, the proposal is denied. In addition, the CTIMO proposal relative to procedures for nomination is denied since it relies on adoption of the above denied proposal.

Testimony received at the hearing relative to CTIMO's proposal to reorganize the committees and the NOAC/VOAC proposal to define "cooperative marketing organization" raised concerns about committee-representation for those growers represented in the other cooperative category (*i.e.*, cooperative organizations handling less than 50 percent of the total volume). Due to changes in the navel orange industry's structure the absolute number of growers in the other cooperative category has declined significantly. Thus, committee representation for those navel orange growers is proportionally greater than for such growers in the other affiliation categories. As mentioned in the brief submitted by California Citrus Mutual, one solution to this problem would be to reorganize the committees' representation into two categories: those growers affiliated with the major central marketing organization and all other growers. It was argued that such proposal would place all growers not affiliated with the major central marketing organization on an equal footing. Under this proposal, the major central marketing organization would retain its current three grower and two handler members and their respective alternates. The "all other growers" category would have equal representation on the committees with their three grower and two handler members and alternates. However, this would be a radical departure from the representation the other cooperatives have experienced for over 30 years and would deny them representation based on their cooperative structure and market share.

To afford continued equitable cooperative representation and at the same time to allow more flexible representation by growers affiliated with independent marketing organizations, it is concluded that navel orange industry views would be better and more equitably represented by changing the requirements for NOAC representation between the three grower affiliation categories (major cooperative marketing organization, other

cooperative marketing organization, and independent marketing organization). Specifically, the NOAC would consist of three grower members and two handler members representing the major cooperative, one grower member representing the other cooperative marketing organizations, and two grower members and two handler members representing the independent organizations.

Because the structure of the Valencia orange industry has not undergone a significant change in the absolute number of growers in the other cooperative category, there is no compelling reason to realign the VOAC's affiliation categories. However, both orders should be amended to require a minimum of one grower member for each category which has at least five percent of the total volume of oranges handled. In establishing a minimum level of representation it is also recommended that a maximum of three grower and two handler members for any one category be allowed. Such requirement would continue to allow maximum representation of those in the industry affected by committee discussions, actions, and recommendations. In addition, this amendment to the orders is recommended with the provision that nominations from the "all other growers" category be obtained by mail balloting. Mail balloting will encourage greater participation in the nominating process, and procedures to effectuate this recommended amendment should be developed by the committees as soon as possible and recommended to the Secretary for approval through rules published in the Federal Register. The development of such mail balloting procedures should encompass the means by which slates of nominees will be developed, how such nominations will be announced to the industry, how nominees will be selected, and the dates by which such nomination procedures will be conducted.

The order should not be amended to define cooperative marketing organization. Such proposal would effectively prohibit growers affiliated with cooperative marketing organizations who market their fruit through independent marketing organizations from being represented on the committees, as cooperatives. Therefore, the proposal is denied.

The committees recommended two additional changes in committee structure. These were to designate, as the "public member" and alternate, the member who is not a grower or handler, or employee, agent, or representative of a grower or handler, and to provide for additional alternate handler members. Designating individual public members and alternate members on the committees more clearly indicates the desire of the industry for these voting members to clearly reflect the interests of the public at large, including consumer interests, and is consistent with statutory requirements to consider the public interest. Provision for additional alternate handler members should assure representation on the committees in the event of the absence of both the handler member and alternate. The orders should be so amended to make these changes in the composition of the committees.

In addition, it is recommended that the orders be amended to provide that the Secretary select and appoint the public member and alternate from qualified persons. Historically, in accordance with the orders, the Secretary has selected the non-industry member from those persons recommended to him by the administrative committees. It is felt that such amendment will serve to give notice that the Secretary may appoint a public member, and respective alternate, from any of a number of sources. The public and industry at large, as well as respective committees, are encouraged to submit nominees for consideration and action by the Secretary. The public member is to be a full participant in the affairs of the committees, and is expected to vote at all committee meetings.

An integral part of the change in committee representation is the assumption that the major cooperative marketing organization handles more than 50 percent of the total volume of oranges handled during the marketing year in which nominations for members and alternate members are made. However, the percentage of the total volume of oranges handled by the major cooperative marketing organization may not always exceed 50 percent. Therefore, the orders should be further amended to provide for reapportioning the committees' representation between the major cooperative marketing organization, other cooperative marketing organizations, and independent marketing organizations. The recommended decision proposed a specific formula reapportioning membership on the administrative committee.

The recommended decision also proposed to increase the quorum requirements and the number of votes necessary to pass a committee action from six to seven.

A number of exceptions were filed on proposed changes to establishment of the committees, nominations, selection, reapportionment and committee quorum and voting requirements.

The exception filed by Belridge stated that the orders should be changed to require all grower members on the committees. The CTIMO exception requests a committee of nine grower and two public members. This exception also suggests that grower members be allocated by district and no individual should serve on the NOAC and VOAC at the same time. As previously discussed, the record does not demonstrate the need to exclude handlers from the committees or apportion grower members among the production areas. However, it would promote industry participation and involvement in the administration of the marketing orders to require that no person should simultaneously serve on the NOAC and VOAC.

The exception filed by CCM supports the recommended reapportionment of membership of the NOAC, but proposes as comparable change in the composition of VOAC. As recommended, the other cooperative category would lose one handler member position and the independent grower group would gain one handler member position on the NOAC. The exception filed by Pure Gold, Inc., opposes deletion of the handler member position from the other cooperative category on the NOAC. As previously discussed, changes in the volume of navel oranges handled by the respective grower groups necessitate changing representation in the other cooperative category on the NOAC. The proposed amendments provide for reapportioning membership on VOAC if changes occur in the volume of Valencia oranges handled by the respective grower groups. Therefore, these exceptions are denied.

The exception filed by CCM noted a deficiency in the proposed method of reapportioning membership on the NOAC and VOAC. Specifically, under the proposed amendment of § 907.29(n) and 908.29(n), if the major cooperative handles more than then 30 percent of the regulated volume, but less than 40 percent of the regulated volume, such cooperative would lose two member positions. As structured, however, the independent group on NOAC could not gain both member positions. This is because under the proposed reapportionment on NOAC the independent group would be assigned four member positions and the order provides that no grower group can have

more than five positions. Thus, the independent representation on NOAC could only be increased by one member even if that group controlled all of the volume of oranges lost by the major cooperative. Under similar circumstances, this situation could occur in reapportionment on the VOAC. The exception proposed a different reapportionment schedule. Other exceptions were filed by Sunkist Growers, Inc., and NOAC and VOAC, and Western Growers Association on proposed nomination, selection, and reapportionment provisions. Based on these exceptions, it is concluded that the proposed amendment should be modified to: (1) Establish the number of members (alternates and additional alternates) allocated to the major cooperative in the event that the major cooperative handles less than 50 percent of the regulated volume but more than 40 percent of the regulated volume; (2) require a formal amendatory hearing to change representation on the committees in the event that the major cooperative handles 40 percent or less of the regulated volume; (3) retain the provision that each grower group would be entitled to one grower member if that group handled at least five percent of the volume and no grower group could nominate more than five members regardless of the volume handled; and (4) eliminate provision for mail balloting for cooperative members since that provision was provided in the reapportionment schedule which is being modified in this decision. In the event that it is necessary to amend these orders to change committee representation because of changes in the volume handled by the respective grower groups, it is intended that the incumbent members and alternates shall continue to serve until the committee membership can be reconstituted on the basis of the amended orders. Modification of committee reapportionment provisions involves a change in § 907.20(n) and § 908.29(n).

The exception filed by Western Growers Association and Pure Gold, Inc., requests that the term "cooperative marketing organization" be defined and the term "handle" be clarified to emphasize the marketing function. The exception by Western Growers Association indicates that the failure to define cooperative marketing organization would result in the disenfranchisement of at least three cooperatives from handler representation.

The term "handle" is defined in the orders to describe the precise activities which are regulated thereunder and any handler of oranges should be eligible to serve on either committee if nominated by a grower group and selected by the Secretary. Therefore, no changes in the definition of handle or handler eligibility to serve on the committee are warranted.

The proposal to define the term "cooperative marketing organization" was denied for the reasons set forth in material issue (15). However, no cooperative marketing organization or the growers affiliated therewith would be denied representation. Under the proposed amendment, minor cooperative marketing organizations nominate one grower member to the NOAC and one grower and one handler member to VOAC and alternates and additional alternates. In its exception, Sunkist Growers, Inc., objected to deletion of language in § 907.22(e) and § 908.22(e) covering weighting of votes pursuant to § 907.22(c) and § 908.22(c). However, such amendment is consistent with the objective of placing all of the minor cooperative marketing organizations on an equal footing in nomination of members to the committees. The exception filed by Exeter Packers and Paramount Citrus suggests a minor clarification in the language in § 907.2(b) which is granted.

Exceptions filed by Belridge, CCM and CTIMO requested mail balloting for nominating all members of the committee. The exception filed by NOAC and VOAC objected to mail balloting for cooperative members in the event no cooperative has more than 30 percent of the volume handled. The exception for requesting that mail balloting procedures apply to cooperative members as well as independent members is denied. A number of exceptions were made to the proposed increase in quorum requirements and the number of concurring votes to pass a committee action. For instance, the exception filed by CCM emphasized that the higher vote requirement could adversely affect minority interests since the major cooperative members, if they voted together, could prevent adoption of a committee action. We have considered these exceptions. However, the record clearly established the need of this industry to be more unified and cohesive in its approach to regulation of product to market. To achieve this unity and to reflect the clarified role of the voting public member and alternate, it is necessary to revise the committees' procedures relative to quorum and voting. Seven members of the committee shall constitute a quorum and any action of the committee shall require at least seven concurring votes.

(16) Sections 907.31 and 908.31 should be amended to provide that grower and handler members and alternates of the administrative committees shall be compensated at a rate not to exceed $100 per day or portion thereof spent in performing duties under the orders. The current provisions of the orders limit such compensation to an amount not exceeding $25 per day or portion thereof. The evidence adduced at the hearing supports an increase in the rate of compensation for all committee members. It was recommended that the precise rates be recommended by the committees and approved by the Secretary.

Current provisions of the orders provide that alternate members receive compensation only when acting as members of the administrative committees. Providing for alternate members to be compensated for attending meetings even though the committee member also attends appears likely to increase alternate member participation at meetings. This is desirable because alternate members need to become familiar with issues before the committees, and the exeperience is helpful in contributing to committee deliberations and recommendations in the event an alternate is required to serve for an absent member.

The substance of the testimony favoring the increase did not suggest that the recommended maximum rate of compensation was in any way considered to be a payment or partial payment for services rendered. The current compensation rate was set when these sections were last amended in 1970. The recommended increase in the rate of compensation recognizes increases in cost incurred by members and alternates since that time. It was indicated that while the $100 figure was a maximum amount for grower and handler members, the compensation could be a lesser amount as recommended by the respective committees and approved by the Secretary.

One witness recommended an alternative proposal reegarding compensation of committee members. The proposed amendment would increase the compensation of committee members to $250 per day from $25 per day. The record indicates that $250 per diem compensation for all committee members and alternate members would add substantially to the committees' operating costs but would not provide any more benefit to administration of

the orders than the $100 per diem discussed above. Thus, this proposed amendment is denied.

It is recommended, however, that the orders be amended to provide that the public member and alternate may be compensated at a rate greater than $100, but not to exceed $250 per day or portion thereof spent in performing duties under the orders. Such exact rate shall be established by the committees and approved by the Secretary. It is felt that the public member is likely to spend a significant amount of time in preparation for active participation and deliberation on matters before the committees and voting on such. It is further felt this contribution of time and development of expertise outside of their regular business functions and primary source of income should be compensated at a higher rate than that of grower and handler members.

Several exceptions were received objecting to the proposed higher compensation rate for the public member. For instance, the exception by CCM states in part "* * * The fees while providing some compensation—are not high enough to attract qualified individuals who would not otherwise serve. The committees will function best if all committee members serve essentially as volunteer, rather than paid employees" However, the public member and alternative are not members of the industry and cannot be expected to serve as volunteers, as do the other members and alternates. A higher rate of pay will encourage participation by more qualified persons. The precise rate of pay that is appropriate will depend upon the individual, and therefore the Secretary should have discretion to determine the rate.

(17) The orders should provide authority for the respective committee to impose an interest charge on any handler who fails to pay such handler's assessment within the time prescribed by the committees. In the event the handler thereafter fails to pay the amount outstanding, including the interest charge, within the prescribed time, the committees should be authorized to impose a one-time late payment charge on such outstanding amount. Nonpayment of assessments can have an adverse impact on the operation of the committees and could require them to borrow money and pay interest to continue operation. Authority for the committees to levy an interest charge on unpaid assessments and to add a late payment charge to the outstanding delinquent obligation should encourage handlers to pay assessment obligations promptly. By paying the obligation when due, handlers would not be subject to either the interest or late payment charge. It would not be desirable to specify the interest or late payment charge in the orders because such charges change as the availability of money fluctuates. Therefore, the orders should permit the committee to recommend the interest rate and the late payment charge for the approval of the Secretary to provide the flexibility to make changes as needed. Opposition to the proposal contended that because only a few handlers were involved in nonpayment or late payment of assessments, there was no need for the proposed amendment. However, as stated, it is essential that all handlers pay assessment obligations when due. Therefore, it is concluded that the orders should be amended as hereinafter set forth.

(18) The marketing orders provide that the committees receive, investigate, and report to the Secretary violations of the orders. To accomplish this duty the orders require that handlers (and others conducting business with such handlers) submit certain applications and reports of the NOAC or the VOAC for purposes of assuring and verifying compliance with the orders. The AMAA provides that violators are subject to civil or criminal penalties.

The committees' ability to ensure compliance with the orders contributes to the statutory objectives of orderly marketing and improving returns to producers by minimizing the means of circumventing the provisions of the orders and maximizing the ability of the NOAC and the VOAC to investigate and report violations of the orders in a timely fashion.

Compliance is primarily accomplished by means of reporting and recordkeeping. Such reporting consistently provides the committees with requisite information to successfully conduct audits of handlers' shipments.

Testimony presented by a committee witness proposed that the orders be amended to require that handlers maintain specific records for a specified number of years. Specifically, the proposal was to add a new §§ 907.73 and 908.73, *Records and Retention*, which would specify records to be maintained, specify a time period for such retention, require that such records be available to the committees, and require the confidential treatment of such records. The amendment would allow the committees to verify compliance with regulation under the orders and is consistent with § 8d of the act. In carrying out these provisions the committees, through their designated employees, would have access to premises and records of handlers and may conduct a physical inspection of orange groves for purposes of verifying handler estimates or otherwise ascertaining the quantity of fruit available for shipment. If a handler does not permit such inspection, the committees would be unable to compute and issue the most accurate proate base for the handler.

Arguments offered in opposition to the committees' proposal stated that no significant need for the proposal had been demonstrated, it was unnecesary regulatory activity, it would impose undue costs and burdens on the industry, it would not enhance grower returns, it would divulge proprietary business information, and it would not solve the orders' enforcement problems. However, these assertions were not well substantiated. In fact, it is likely that the committees' ability to administer the marketing orders would be materially improved by the proposal. Therefore, the proposed amendment is adopted.

One portion of the recordkeeping proposal must be modified based on rules promulgated by the Office of Management and Budget (48 FR 13666). According to that rule the authority to approve record retention will be issued on a three-year basis only. The proposed amendment would have required record retention for a four-year period. For that reason, the four-year period as originally proposed by the committees is changed to a three-year period. Furthermore, the evidence indicates that a new section in the rules and regulations should be added to establish exactly which records handlers should be required to keep pursuant to the marketing orders.

The exception filed by CTIMQ opposes changes in reporting requirements indicating that the record fails to demonstrate that a problem exists. However, as discussed under material issues (18) and (22) the proposed changes in reporting provisions are fully supported by record evidence. Therefore, this exception is denied.

(19) It was proposed at the hearing that order provisions relative to oranges handled for distribution to charitable organizations should be amended to provide more flexibility. Currently, all such oranges are not subject to regulation; however, a handler must notify the committees of such handling by filing an appropriate report, and the receiver must return a copy of the report to the committees indicating receipt of the fruit. This is done because of the

committees' responsibility to ensure that oranges donated to charitable organizations do not enter commercial channels of trade.

At the hearing CTIMO proposed that §§ 907.67 and 908.67 be revised to designate charities as those organizations so recognized under the Internal Revenue Code. Further, handlers could ship donations up to 100 cartons of fruit to any such organization without any kind of certification. A brief filed by the administrative committees opposed CTIMO's proposal to modify the provisions regarding charitable donations because it contained no means to assuring that oranges donated to charities would not enter competitive channels of trade. Moreover, the proposal had not demonstrated that the current order provisions are inadequate. Since the current applicable provisions do not appear on the record to be particularly burdensome, the proposal advanced by CITMO is denied. However, it is recommended and urged that the committees review the status of exemptions from regulation and recommend any changes which might improve or strengthen the desire or inclination for charitable giving by the industry.

CTIMO filed an exception encouraging adoption of the proposal which it advanced at the hearing. The exception is denied for the reasons set forth herein.

(20) New sections 907.34 and 908.34 should be added to authorize addition of consumer affairs advisors to the committees. The orders should be amended to so provide and allow the committees to determine appropriate compensation and duties.

Testimony in favor of this amendment indicates that such advisors would likely be employed by the committees on an irregular but specialized basis. Their duties would involve advising the committees relative to the impact upon consumers of regulatory action being considered.

Consumer affairs advisors might include, for example, home economists, employees of State Departments of Food and Agriculture, or editors of the food and nutrition section of a local newspaper. However, such advisors would not be limited to persons with these types of backgrounds.

Opposition to this proposal was raised by several individuals who testified that a need for such advisors had not been established, the proposed order language was vague, and their duties had not been defined. Yet, several witnesses who testified against the specific proposal supported the concept of consumder affairs advisors. On the basis of the record it is determined that amendment of the orders to add such authority is appropriate; therefore, the proposal is adopted.

An exception was filed by CITMO supporting authority to appoint consumer affairs advisors if they are independent of industry organizations. However, consumers affairs advisors should not be limited to non-industry members. Industry representatives possess valuable information and can significantly contribute to resolution of consumer-related issues. Therefore, the exception is denied.

(21) Sections 907.17 and 908.17 of the orders should be amended to revise the term "carload" to mean a quantity of navel or Valencia oranges equivalent to 1,000 cartons of oranges. For many years the California-Arizona orange industry has considered a carload of oranges to be 1,000 rather than 924 cartons. Thus, this amendment is necessary to update the order language to reflect the current industry meaning of the term carload and is adopted.

(22) Sections 907.70 and 908.70 of the orders should be amended to insert the words "each persons who first handles oranges" in lieu of "each handler." Since 1953 the committees have interpreted these sections as requiring that weekly reports be filed by those who first handle oranges rather than any subsequent handler.

Testimony offered in support of this proposal stated that employing a literal interpretation of the current sections would require those who performed orange handling functions, subsequent to the time the fruit was first handled, to file such reports. This would be unnecessary and duplicative. Those who opposed the proposal stated that it was an unnecessary extension of the orders' regulatory authority and the proposed language was vague. However, the proposed language makes clear the responsibilities and duties of the first handler with respect to the filing of weekly reports and does not constitute any additional regulatory authority. For these reasons, it is adopted.

(23) A proposal in the notice of hearing by the Department was that consideration be given to making such other changes in the orders as may be necessary to make the entire orders conform to any amendments that may result from this proceeding. This proposal was supported at the hearing without opposition, and such changes as are necessary are being incorporated into the orders.

There was a proposal submitted by the committees in the notice of hearing that provisions of the marketing agreements and orders concerning §§ 907.32 and 908.32, *Annual review and meeting*, be amended. This proposal was withdrawn at the hearing; testimony was not presented in its support. In addition, several other proposals submitted by California Citrus Mutual which were contained in the Notice of Hearing were withdrawn at the hearing. Their proposals, numbers 2–7, were withdrawn at the hearing and testimony was not presented in their support.

There was also a proposal included in the notice of hearing submitted by the committees upon which testimony was given that the marketing agreements and orders be amended by adding new §§ 907.74 and 907.74, *Failure to report*. Although testimony was introduced for and against this proposal, subsequently the proposal was formally withdrawn at the hearing.

Rulings on Briefs of Interested Persons

At the conclusion of the hearing, the Administrative Law Judge fixed August 15, 1984, as the final date for interested persons to file proposed findings and conclusions, and written arguments or briefs, based on the evidence received at the hearing.

A brief filed on behalf of the U.S. Small Business Administration by Frank S. Swain, Chief Counsel for Advocacy, argued that the Regulatory Flexibility Act (Pub. L. 96–354, 5 U.S.C. 601 *et seq.*) applies to these formal rulemaking proceedings. He further states that the Agricultural Marketing Service, USDA, should consider preparing both an initial and final regulatory flexibility analysis with respect to these proceedings.

The purpose of the RFA is to fit regulatory actions to the scale of business subject to such actions in order that small businesses will not be unduly or disproportionately burdened. The Agricultural Marketing Agreement Act, however, requires the application of a uniform rule to those regulated, and it would take precedence if the two statutes were incompatible. The regulations proposed herein are the minimum necessary to accomplish the purposes of the Agricultural Marketing Agreement Act of 1937.

Marketing orders and rules proposed thereunder, however, are unique in that they are brought about through group action of essentially small entities for their own behalf. Thus, both statutes have small entity orientation and compatibility.

While regulations issued under these orders impose some costs on affected handlers and the number of such firms may be substantial, the added burden on small entities, if present at all, is not significant.

Other briefs and proposed findings and conclusions were filed by Barbara Lindemann Schlei, Counsel for Berne H. Evans III; Gary M. Cohen and Phillip M. Eisenstat, of the U.S. Department of Justice; Dan M. Burt and James A. Moody, Counsel for the Exeter Orange Company, Inc., William K. Quarles, for the California-Arizona Citrus League; Joel Nelson, for California Citrus Mutual; A. E. Canham, for the Navel and Valencia Orange Administrative Committee; R. E. Herrick, on behalf of Belridge Farms and Belridge Packing Company; and Thomas E. Campagne, Counsel for Riverbend Farms, Inc.

These briefs, proposed findings and conclusions, and the evidence in the record were considered in making the findings and conclusions set forth herein. To the extent that any suggested findings and conclusions filed by interested persons are inconsistent with the findings and conclusions set forth herein, the requests to make such findings or to reach such conclusions are denied.

Marketing Agreements and Orders

Annexed hereto and made a part hereof are four documents entitled, respectively, "Marketing Agreement, as Further Amended, Regulating the Handling of Navel Oranges Grown in Arizona and Designated Part of California," "Order Amending the Order, as Amended, Regulating the Handling of Navel Oranges Grown in Arizona and Designated Part of California," "Marketing Agreement, as Further Amended, Regulating the Handling of Valencia Oranges Grown in Arizona and Designated Part of California," and "Order Amending the Order, as Amended, Regulating the handling of Valencia Oranges Grown in Arizona and Designated Part of California." These documents have been decided upon as the detailed and appropriate means of effectuating the foregoing conclusions.

It is hereby ordered, that this entire decision, except the annexed marketing agreements, be published in the Federal Register. The regulatory provisons of the marketing agreements are identical with those contained in the orders as hereby proposed to be amended by the annexed orders which are published with this decision.

Referendum Order

It is hereby directed that a referendum be conducted for each marketing order in accordance with the procedure for the conduct of referenda (7 CFR 900.400 *et seq.*), to determine whether the issuance of the annexed orders as amended and as hereby proposed to be amended, regulating the handling of Navel and Valencia oranges grown in Arizona and designated parts of California are approved or favored by the respective producers as defined under the terms of the orders, who during the representative period were engaged in the production of Navel or Valencia oranges in the aforesaid production area. The referendum ballot shall provide only for the approval or disapproval of the orders as amended and as hereby proposed to be amended.

The representative period is hereby determined to be November 1, 1983, through June 30, 1984, for Navel oranges and February 1, 1983, through January 31, 1984, for Valencia oranges.

The agents of the Secretary to conduct such referenda are hereby designated to be Roland G. Harris and Anne M. Dee, Fruit and Vegetable Division, Agricultural Marketing Service, U.S. Department of Agriculture, 945 South Figeroa Street, Suite 540, Los Angeles, California 90017. The referenda shall be conducted between August 1 and August 31, 1984.

List of Subjects in 7 CFR Parts 907 and 908

Marketing Agreements and Orders, California, Arizona, Oranges (Navel and Valencia).

Signed at Washington, D.C. on July 12, 1984.

C. W. McMillan,

Assistant Secretary, Marketing and Inspection Services.

Order [1] Amending the Order as Amended, Regulating the Handling of Navel Oranges Grown in Arizona and Designated Part of California

Section 907.0 Findings and determinations. The findings and determinations hereinafter set forth are supplementary and in addition to the findings and determinations made in connection with the issuance of the order and each of the previously issued amendments thereto; and all of said previous findings and determinations are hereby ratified and affirmed except insofar as such finding and determinations may be in conflict with the findings and determinations set forth herein.

(a) *Findings upon the basis of the hearing record.* Pursuant to the Agricultural Marketing Agreement Act of 1937, as amended (7 U.S.C. 601–674), and the applicable rules of practice and procedure effective thereunder (7 CFR Part 900), a public hearing was held in Bakersfield, California, on April 5–22, 1983, upon proposed amendments to the marketing agreement, as amended, and to Order No. 907, as amended (7 CFR Part 907), regulatinhg the handling of Navel oranges grown in Arizona and Designated Parts of California. Upon the basis of the evidence introduced at such hearing and the record thereof, it is found that:

(1) The said order, as amended and as hereby further amended, and all of the terms and conditions thereof, will tend to effectuate the declared policy of the act;

(2) The said order, as amended and as hereby further amended, regulates the handling of navel oranges grown in the designated production area in the same manner as, and is applicable only to persons in the respective classes of commercial or industrial activity specified in, the marketing agreement and order upon which hearings have been held;

(3) The said order, as amended and as hereby further amended, is limited to its application to the smallest regional production area that is practicable consistent with carrying out the declared policy of the act;

(4) The said order, as amended and as hereby further amended, prescribes, so far as practicable, such different terms, applicable to different parts of the production area, as are necessary to give due recognition to differences in the production and marketing of navel oranges; and

(5) All handling of navel oranges grown in the designated production area is in the current of interstate or foreign commerce or directly burdens, obstructs, or affects such commerce.

It is, therefore, ordered, That, on and after the effective data thereof, all handling of navel oranges grown in the production area shall be in conformity to, and in compliance with, the terms and conditions of the said order, as amended, and as hereby further amended as follows:

The provisions of the proposed marketing agreement and order, amending the order, contained in the recommended decision issued by the Administrator on April 5, 1984, and published in the Federal Register on April 11, 1984 (49 FR 14360), shall be and are the terms and provisions of this order, amending the order, subject to changes in §§ 907.21, 907.22, 907.29(n), 907.30, 907,31, 907,33, 907.50, 907.51(b), 907.54(b), and 907.60 and are set forth in full herein.

[1] This order shall not become effective unless and until the requirements of § 900.14 of the rules of practice and procedure governing proceedings to formulate marketing agreements and orders have been met.

PART 907—[AMENDED]

Section 907.10 is amended by revising the first sentence to read as follows:

§ 907.10 Handle.

"Handle" means to buy, sell, consign, transport, or ship oranges (except as a common or contract carrier of oranges owned by another person), or in any other way to place oranges in the current of commerce, between the State of California and any point outside thereof in the continental United States or Canada, or within the State of California, or between the State of Arizona and any point outside thereof in the continental United States or Canada, or within the State of Arizona. * * *

Section 907.17 is revised to read as follows:

§ 907.17 Carload.

"Carload" means a quantity of oranges equivalent to 1,000 cartons of oranges, or such other quantity of oranges, as may be established by the committee with the approval of the Secretary.

Section 907.18 is revised to read as follows:

§ 907.18 Export.

"Export" means shipments of oranges to points outside the continental United States and Canada.

Section 907.20 is revised to read as follows:

§ 907.20 Establishment and membership.

There is hereby established a Navel Orange Administrative Committee consisting of 11 members, for each of whom there shall be one alternate, and for each grower and handler member an additional alternate. Six of the members and their respective alternates shall be growers. Four of the members and their respective alternatives shall be handlers, or employees of handlers, or employees of central marketing organizations. One member of the committee and an alternate of such member shall be selected as provided in § 907.23 and shall be referred to in this part as the "public" member of the committee. The six members of the committee who shall be growers are referred to in this part as "grower" members of the committee and the four members who shall be handlers, or employees of handlers, or employees of central marketing organizations are referred to in this part as "handler" members of the committee.

Section 907.21 is revised to read as follows:

§ 907.21 Term of office.

The term of office of each member and alternate member of the committee shall be for a period of two years, and such terms shall begin on October 1 of each even-numbered year: *Provided,* That such members and alternates shall serve in such capacities for the portion of the term of office for which they are selected and qualify and until their respective successors are selected and have qualified. The consecutive terms of office of members, not including alternate members or additional alternate members, shall be limited to three terms. No person having served three consecutive terms shall serve as a member, alternate member, or additional alternate member for the next succeeding term of office. Members of the committee who have served three consecutive two-year terms as of October 1, 1984, are not eligible to serve on the committee as a member or alternate until October 1, 1986.

Section 907.22 is amended by revising paragraphs (a) and (b), (c), (d), (e), and (f) and adding new paragraph (g) to read:

§ 907.22 Nominations.

(a) With respect to paragraph (b) and (c) of this section, the time and manner of nominating members, alternate members, and additional alternate members of the committee shall be prescribed by the Secretary. With respect to paragraph (d) of this section, the committee, with the approval of the Secretary, shall adopt procedural rules and regulations to be observed for (1) the selection of candidates for members, alternate member, and additional alternate member nominations, and (2) the conducting of such nominations by mail balloting.

(b) Any cooperative marketing organization, or the growers affiliated therewith, which handled more than 50 percent of the total volume of oranges handled in fresh domestic channels, including Canada, during the fiscal year in which nominations for members and alternate members of the committee are submitted shall nominate no more than three grower members, three alternate grower members, three additional alternate grower members, two handler members, two alternate handler members and two additional alternate handler members of the committee. In the event that no cooperative marketing organization handled more than 50 percent of the total volume of oranges handled during the fiscal year in which nominations for members and alternate members of the committee are submitted, committee representation shall be reallocated in accordance with § 907.29(n) of this part.

(c) All cooperative marketing organizations which are not qualified under paragraph (b) of this section, or the growers affiliated therewith, shall nominate one grower member, one alternate grower member, and one additional alternate grower member.

(d) All growers which are not qualified under paragraphs (b) and (c) of this section shall nominate at least two grower members, two alternate grower members, two additional alternate grower members, two handler members, two alternate handler members, and two additional alternate handler members of the committee.

(e) When voting for nominees, each grower shall be entitled to cast one vote which shall be cast on behalf of such grower, the grower's agents, subsidiaries, affiliates, and representatives.

(f) The public member and an alternate public member of the committee, shall be selected by the Secretary pursuant to § 907.23 and shall not be growers or handlers, or employees, agents, or representatives of growers or handlers (other than a charitable or educational institution which is a grower or handler), or of a central marketing organization.

(g) Grower and handler member, alternate member and additional alternate member positions may be allocated pursuant to § 907.29(n) of this part.

Section 907.23 is revised to read as follows:

§ 907.23 Selection.

From the nominations made pursuant to § 907.22(b) or from other qualified growers and handlers, the Secretary shall select three grower members and two handler members of the committee, an alternate and an additional alternate to each such member. From the nominations made pursuant to § 907.22(c) or from other qualified growers the Secretary shall select one grower member of the committee, an alternate and an additional alternate to such grower member. From the nominations made pursuant to § 907.22(d) or from other qualified growers and handlers the Secretary shall select two grower and two handler members of the committee, an alternate and an additional alternate to each such grower and handler members. The Secretary shall select one public member and one alternate public member of the committee in his discretion from qualified persons suggested by the public, and industry at

large, as well as the respective committees.

Section 907.29 is amended by revising paragraph (n) to read as follows:

§ 907.29 Duties.

* * * * *

(n) With the approval of the Secretary, to reapportion the number of grower members or handler members on the committee who are nominated pursuant to § 907.22 (b), (c), and (d). Any such reapportionment shall be based, insofar as practicable, upon the proportionate amount of navel oranges handled by the respective types of marketing organizations: *Provided,* That (1) any cooperative which handled 50 percent or less, but more than 40 percent of the total quantity or oranges handled in fresh domestic channels, including Canada, shall be entitled to two grower members, two handler members, their respective alternates and additional alternates, and (2) any reapportionment based on § 907.29(n)(1) shall be allocated proportionately to either or both groups which have the greatest increase in oranges handled in fresh domestic channels. Any reapportionment of membership shall provide that no grower group could nominate more than five members regardless of the volume handled and each grower group would be entitled to nominate at least one grower member provided that such group handled at least five percent of the volume handled.

Section 907.30 is amended by revising paragraph (a) to read as follows:

§ 907.30 Procedure.

(a) Seven members of the committee shall constitute a quorum and any action of the committee shall require at least seven concurring votes.

* * * * *

Section 907.31 is revised to read as follows:

§ 907.31 Expenses and compensation.

The members and alternates of the committee shall be reimbursed for expenses necessarily incurred by them in the performance of their duties under this part. Members and alternates shall receive compensation at a rate to be recommended by the committee and approved by the Secretary which rate shall not exceed $100 per day or portion thereof spent in performing such duties. The public member and alternate shall receive compensation at a rate to be recommended by the committee and approved by the Secretary which rate may be greater than $100, but shall not exceed $250 per day or portion thereof spent in performing such duties.

Section 907.33 is revised to read as follows:

§ 907.33 Research and development.

The committee, with the approval of the Secretary, may establish or provide for the establishment of marketing research and development projects designed to assist, improve, or promote the marketing, distribution, and consumption of navel oranges. Such projects may provide for any form of marketing promotion, including paid advertising. The expense of such projects shall be paid from funds collected pursuant to this part.

A new § 907.34 is added to read as followes:

§ 907.34 Consumer affairs advisors.

The committee may appoint such consumer affairs advisors as it deems appropriate and determine the compensation and define the duties of such advisors.

Add a new paragraph (d) to § 907.41 to read:

§ 907.41 Assessments.

* * * * *

(d) Assessments not paid within a period of time prescribed by the committee may be made subject to interest or late payment charges, or both. The period to time, rate of interest, and late payment charge shall be as recommended by the committee and approved by the Secretary: *Provided,* That when interest or late payment charges are in effect, they shall be applied to all assessments not paid within the prescribed period of time.

Section 907.50 (a) is revised to read:

§ 907.50 Marketing policy.

(a) Prior to the recommendation for regulation for each prorate district, the committee shall submit to the Secretary its marketing policy for the ensuing season. Such marketing policy shall contain the following information: (1) The available crop of oranges in the prorate district, including estimated quality and composition of sizes; (2) the estimated utilization of the crop, showing the quantity and percentages of the crop that will be marketed in domestic, export, and by-product channels, together with quantities otherwise to be disposed of; (3) a schedule of estimated shipments to be recommended to the Secretary during the ensuing season; (4) available supplies of competitive oranges in all producing areas of the United States; (5) level and trend of consumer income; (6) estimated supplies of competitive citrus commodities; and (7) any other pertinent factors bearing on the marketing of oranges.

In formulating its marketing policy the committee should give due consideration to the onset and duration of prorate, the length of the prorate period, and size regulation. In the event that it becomes advisable to substantially modify such marketing policy the committee shall submit to the Secretary a revised marketing policy setting forth the information as required in this paragraph.

* * * * *

Section 907.51 is amended by revising paragraphs (a) paragraph (b) is shown for the convenience of the reader. and (c) to read as follows:

§ 907.51 Recommendations for volume regulation.

(a) The committee may recommend to the Secretary the total quantity of oranges which it deems advisable to be handled during the next succeeding prorate period in each prorate district: *Provided,* That the committee may establish a limitation on the maximum number of prorate periods during a season and the beginning and ending dates for such periods. If, for any reason, the committee recommends the issuance of volume regulation but fails to recommend to the Secretary the total quantity of oranges which it deems advisable to be handled during the next succeeding prorate period in each prorate district, views of the committee members with respect to its failure to act shall be submitted promptly to the Secretary.

(b) In making its recommendations the committee shall provide equity of marketing opportunity to handlers in all districts and shall give due consideration to the following factors: (1) Market prices for oranges, including market prices by grades and sizes; (2) supply of oranges on track at, and enroute to, the principal markets; (3) supply, maturity, and condition of oranges to the area of production, including the grade and size composition thereof; (4) market prices and supplies of citrus fruits from California, Arizona, and competitive producing areas, and supplies of other competitive fruits; (5) trend and level in consumer income; (6) an evaluation and recommendation concerning the beginning and ending dates for volume regulation and the length of in each prorate period; and (7) other relevant factors.

(c) At any time prior to or during the prorate period for which the Secretary, pursuant to § 907.52, has fixed the quantity of oranges which may be handled, the committee may, if such

action is deemed advisable, recommend to the Secretary that such quantity be increased for such prorate period. Any such recommendation, together with the committee's reasons for such recommendation, shall be submitted promptly to the Secretary.

* * * * *

Section 907.52 is revised to read as follows:

§ 907.52 Issuance of volume regulation.

Whenever the Secretary shall find, from the recommendations and information submitted by the committee, or from other available information, that to limit the quantity of oranges which may be handled in each prorate district during a specified prorate period will tend to effectuate the declared policy of the act, the Secretary shall fix such quantity. Such regulations may be made effective, as authorized by the act, irrespective of whether the season average price for navel oranges is in excess of the parity price specified therefor in the act. The quantity so fixed may be increased by the Secretary at any time prior to or during such period.

Section § 907.53 is amended by revising paragraphs (b), (c), (f), (g) and (h) and adding new paragraph (i) as follows:

§ 907.53 Prorate bases.

* * * * *

(b) Such application shall be substantiated in such manner and shall be supported by such evidence as the committee may require, and shall include at least (1) the name and address of the producer or duly authorized agent, if any, for each grove or portion thereof, the fruit of which is included in the quantity or oranges available for current shipment by the applicant; (2) an accurate description of the location of each such grove or portion thereof, including the number of acres contained therein; (3) an estimate of the total quantity of oranges available for current shipment in terms of a unit of measure designated by the committee, contained in each grove or portion thereof described in paragraph (b)(2) of this section; and (4) an estimate of the total quantity of oranges available for current shipment by the applicant in terms of a unit of measure designated by the committee. If at the time of filing of an application under this section the committee finds that there is an error, omission, inaccuracy or inadequacy in such application, or that any estimates contained in such application are not reasonably calculated to apprise the committee of the information required by this section, it shall return the application to the applicant for correction or completion. Applicants may resubmit applications to the committee for its consideration at any subsequent time.

(c) Each application shall include a certification by the handler that the handler has control, for all purposes relating to this part, of the oranges described in the application.

* * * * *

(f) When any person having a prorate base has remaining a quantity smaller than such person's allotment, such person shall be removed from the prorate base or that prorate base shall be reduced so that the allotment based thereon shall not exceed the quantity of oranges remaining under the handler's control; *Provided,* That such handler shall receive due allotment to the extent necessary to pay back loans which the handler is obligated to repay in any prorate period that repayment of loans may be due.

(g) The committee shall determine the accuracy of the information submitted pursuant to this section. Except as provided in (b) of this section, whenever the committee finds that there is an error, omission, inaccuracy or inadequacy in any such information, it shall correct the same after granting the person who submitted such report a reasonable opportunity to discuss with the committee the factors considered in making the correction. If it is determined that an error, omission, or inaccuracy has resulted in the establishment of a smaller or a larger quantity of oranges available for current shipment than that to which a person was entitled under this part, such quantity shall be increased or decreased, over such period as may be determined by the committee, by an amount necessary to correct the error, omission inaccuracy or inadequacy.

(h) During any prorate period when volume regulation is likely to be recommended, the committee shall compute, with respect to each prorate district, the total quantity of oranges available for current shipment by each person who has applied for a prorate base and for allotments, except as provided in paragraph (b) of this section. On the basis of such computation, the committee shall fix a prorate base for each person who is entitled thereto. Such prorate base shall represent the ratio between the total quantity of oranges available for current shipment in the particular prorate district by each applicant and the total quantity of oranges available for current shipment in such district by all such applicants. The committee shall notify the Secretary of the prorate base fixed for each person and shall notify each such person of the prorate base so fixed.

(i) The committee shall, with the approval of the Secretary, adopt procedural rules and regulations to effectuate the provisions of this § 907.53.

Section 907.54 is revised by adding a new heading to the existing paragraph and designating that paragraph as paragraph (a), and adding a new paragraph (b). As amended, § 907.54 reads as follows:

§ 907.54 Allotments.

(a) *General maturity allotments.* Whenever the Secretary has fixed the quantity of oranges which may be handled during any prorate period in a prorate district, the committee shall calculate the quantity of oranges which may be handled by each such person during such prorate period. The said quantity shall be the allotment of such person and shall be in an amount equivalent to the product of the prorate base of such person and the total quantity of oranges grown in such prorate district and fixed by the Secretary as the total quantity of oranges which may be handled during such prorate period. The committee shall give reasonable notice to each person of the allotment computed for such person pursuant to this part.

(b) *Marketing incentive allotments.* During any prorate period in which volume regulation is in effect, any handler may handle, in addition to other allotment, an amount of oranges equivalent to 10 percent of the handler's prorate period allotment in each of three separate prorate periods and at such other times and in such other amounts as may be recommended by the committee and approved by the Secretary. Use of marketing incentive allotment may be made by the handler upon prior notification to the committee. This incentive increase is in addition to the allowance for overshipments provided for in § 907.55. The committee shall, with the approval of the Secretary, adopt rules and regulations to establish the types of market development programs that would be available for market incentive allotments, as well as provide for a deduction against the quantity of oranges which a handler has available for current shipment in the event that the handler fails to use all or a portion of the marketing incentive allotment issued or uses such allotment for other than specified purposes. Such rules and regulations may also require that the handler, after each marketing incentive allotment period is over, furnish the committee with reports,

records, and other documentation to substantiate the use of marketing incentive allotment.

Section 907.55 is revised to read as follows:

§ 907.55 Overshipments

During any period for which the Secretary has fixed the total quantity of oranges which may be handled, any person who has received an allotment for such prorate period as calculated under § 907.54(a), and whose total allotment is not loaned, or is not required for the repayment of an allotment loan or as a deduction for a prior overshipment, may handle in addition to such allotment an amount of such oranges equivalent to 20 percent of such allotment, or one carload, whichever is the greater: *Provided, however,* That the committee may, with the approval of the Secretary, reduce such 20 percent to a percentage not less than 10 percent: *Any Provided further,* That, if subsequent to the determination of general maturity, allotment (other than short life allotment) is forfeited in any prorate district during any prorate period, such forfeiture shall be used to reduce the amount of maximum permissible overshipments made during such prorate period, unless the forfeiting handler shall have made a bona fide and timely offer to the committee to lend the handler's undershipment. Such forfeiture shall be first applied to handlers within such district in which the forfeiture occurred and second to qualified handlers in other districts. Allocation of forfeitures to handlers who have overshipped shall be made in proportion to, but not in excess of, the quantity overshipped by each such handler. In the case of short-life allotments, any forfeiture thereof shall be credited as above provided only against overshipment of allotments issued pursuant to § 907.54(a). However, no handler who has overshipped more than the maximum permissible under this section shall participate in the credits allowed by this provision. The quantity of oranges so handled in excess of each such person's allotment (but not exceeding an amount equivalent to the excess shipments permitted under this section) shall be deducted from each such person's allotment for the next prorate period: *Provided,* That no such deduction shall apply when such quantity is entirely reduced by application of forfeited allotment. If such person's allotment for such prorate period is in an amount less than the excess shipments permitted under this section, as reduced by the application of forfeited allotment, the remaining quantity shall be deducted from succeeding prorate period allotment issued to each such person until such excess has been entirely offset: *And Provided further,* That no overshipment incurred during one season shall be deducted from allotments issued during the following season. The provisions of this section shall not apply to any person who, during any prorate period, has not received an allotment under this subpart for such prorate period. The committee, with the approval of the Secretary, shall adopt procedural rules and regulations to effectuate the provisions of this § 907.55.

Section 907.56 is revised to read as follows:

§ 907.56 Undershipments.

If any person handles during any week or longer prorate period a quantity or oranges, covered by a regulation issued pursuant to § 907.52, in an amount less than the allotment of oranges for such period, such person may handle, in addition to such person's allotment for the next two succeeding weeks only, a quantity of such oranges equivalent to such undershipment except that the undershipment of early maturity allotment shall not entitle a handler to so handle an additional quantity of oranges: *Provided,* That with the approval of the Secretary, the committee may increase or decrease the number of weeks or prorate periods over which undershipments of allotment may be carried forward.

Section 907.57 is amended by revising paragraph (c) to read as follows:

§ 907.57 Allotment loans.

* * * * *

(c) An allotment shall be loaned, pursuant to paragraph (a) of this section, for use only during the prorate period for which such allotment was issued. Persons securing repayment of an allotment loan may use such allotment only during the prorate period in which the repayment is made.

* * * * *

Section 907.59 is revised to read as follows:

§ 907.59 Priority of allotments.

During any prorate period in which a person received an allotment, pursuant to § 907.54, and has the right to handle a quantity of oranges in addition to the quantity represented by such allotment, by reason of (a) an undershipment of an allotment pursuant to § 907.56; or (b) the repayment of a loaned allotment pursuant to § 907.57; or (c) a borrowed allotment pursuant to § 907.57, and such person handles a quantity of oranges which is less than the total quantity of such oranges which such person may handle during such prorate period, the amount of such oranges handled shall first apply to such person's current prorate period allotment (or to that portion which is not used pursuant to § 907.55 or § 907.57). The remaining amount, if any, shall be applied in the following order: second, to any undershipment of allotments, pursuant to § 907.56; third, to any allotment repaid to such person pursuant to § 907.57; fourth, to any allotment borrowed, pursuant to § 907.57

Revise § 907.60 to read:

§ 907.60 Early maturity allotments.

Notwithstanding the provisions of § 907.54(a) the committee may, prior to the reaching of general maturity, issue special allotments for the handling of oranges of early maturity. Handlers controlling oranges of early maturity may apply to the committee for such allotments on forms prescribed by the committee and shall furnish to the committee such information as it may require. On the basis of all available information and after consideration of all of the factors enumerated in § 907.51(b) the committee shall determine the extent to which early maturity allotment shall be granted. Total early maturity allotments approved by the committee shall be allocated in an equitable manner among the requesting handlers who qualify therefor. Early maturity allotments issued to any handler may be used only during the prorate period for which issued, and the undershipment of any such allotment shall not entitle such handler to handle an additional quantity of oranges due to such undershipment. Upon the reaching of general maturity, the quantity of oranges available for current shipment of any handler who failed to use all of the early maturity allotments issued to such handler shall be adjusted by deducting therefrom an amount not exceeding twice the amount of unused early maturity allotment. Early maturity allotments are transferrable to other handlers who received early maturity allotments in the same prorate period: *Provided,* That transfers of early maturity allotments shall be made through the committee: *And Provided Further,* That, upon such transfer of allotment, the transferee shall be obligated to use the transferred allotment during the prorate period for which it was issued and if such handler fails to do so shall have such handler's oranges available for current shipment adjusted in the same manner as if the transferred allotment had been issued to

such handler by the committee. The committee shall, with the approval of the Secretary, adopt procedural rules and regulations to effectuate the provisions of this part. Such rules and regulations may authorize the reduction of each handler's quantity of oranges available for current shipment by all or a portion of the amount of oranges each such handler ships prior to general maturity and may provide for other appropriate modifications and adjustments necessary to carry out these provisions.

§ 907.61 [Amended]

Section 907.61 is amended by changing the reference to "§ 907.54" to read "§ 907.54(a)" in the first sentence thereof.

§ 907.61a [Amended]

Section 907.61a is amended by changing the reference to "§ 907.54" to read "§ 907.54(a)" in the first sentence thereof.

Section 907.64 is revised to read as follows:

§ 907.64 Issuance of size regulation.

Whenever the Secretary shall find, from the findings, recommendations, and information submitted by the committee, or from other available information, that to limit the handling of oranges by sizes would tend to effectuate the declared policy of the act, the Secretary shall fix the sizes of oranges grown in each such prorate district which may be handled during the specified period. When any such size regulation restricts the handling of a portion of a specified size, the quantity of such size that may be handled by a handler during a particular prorate period shall be established as a percentage of (a) the allotment issued to such handler during the particular prorate period when volume regulation is in effect, and (b) the total weekly volume handled by such handler when volume regulation is not in effect. Any such regulation may provide that the handling of oranges shipped to Canada shall be subject to size regulation different from the size regulation applicable to the handling of other shipments of oranges. The committee shall be informed immediately of any such regulation issued by the Secretary, and the committee shall promptly give adequate notice thereof to all handlers.

Section 907.67 is revised to read as follows:

§ 907.67 Oranges not subject to regulation.

Except as otherwise provided in this section, nothing contained in this subpart shall be construed to authorize any limitation of the right of the initial handler of oranges to: (a) Handle oranges to charitable institutions for consumption by such institutions or to relief agencies for distribution by such agencies; (b) handle oranges to commercial processors for processing into products, including juice; (c) export oranges or handle oranges to exporters for export purposes; (d) handle oranges by parcel post or by railway express; or (e) handle oranges in such minimum quantities or in such types of shipments as the committee may, with the approval of the Secretary, prescribe. No assessment shall be levied pursuant to § 907.41 on oranges disposed of for the purposes specified in this section. The committee shall prescribe and periodically review, with the approval of the Secretary, such rules, regulations, and safeguards as it may deem necessary to prevent oranges shipped under the provisions of this section from entering into commercial channels of trade contrary to or in violation of this subpart.

Section 907.70 is revised to read as follows:

§ 907.70 Weekly report.

On or before such day of each week as may be designated by the committee, each person who first handles oranges shall report to the committee, in such manner as may be designated and on forms made available by it, the following information with respect to the total of all oranges disposed of by each such handler during the immediately preceding week: (a) The total quantity handled; (b) the total quantity disposed of for manufacture into by-products, showing the identity of each by-products processor involved and the quantity of each; (c) the total quantity disposed of for export, showing the destination and quantity of each such disposition; (d) the total quantity shipped for disposition to persons on relief, including quantity donated for charitable purposes, and shipments by parcel post or express, showing the destination and quantity of each such shipment; and (e) the total quantity disposed of otherwise, showing manner and quantity of each such disposition.

Section 907.71 is revised to read as follows:

§ 907.71 Manifest report.

Each person who first handles oranges shall furnish to the committee information regarding the size of oranges in each standard packed carton or its equivalent handled by such handler whether such shipments were destined to points in the United States and Alaska or to Canada and shall mail or deliver such information to said committee or its duly authorized representative within 24 hours after shipment is made in such manner as the committee shall prescribe and upon forms prepared by it.

Add a new center heading "Records and Retention" following § 907.72 and a new § 907.73 to read:

Record and Retention

§ 907.73 Reports.

(a) Each handler shall maintain such records which will clearly show the details of such handler's receipts and acquisition of oranges, sales, shipments, dispositions, inventories and such other specific information as prescribed by the committee and approved by the Secretary which will relate to the handling and disposition of oranges.

(b) All such records specified shall be retained by the handler for a period of three years following the end of the fiscal year in which such transactions occurred. If within the three-year period, the committee notifies the handler in writing that the retention of such records, or specified records, is necessary in connection with a proceeding under the Act, a court action, or a compliance investigation by the Secretary or the committee specified in such notice, the handlers shall retain such records, or specified records, until further written notification from the committee. The committee shall give further written notification to the handler when retention of the records is no longer necessary.

(c) Each handler shall make available to authorized representatives of the committee and the Secretary at any time during reasonable business hours all records provided for in this part for examination and audit, and shall permit access to all premises where records are maintained or stored and where oranges are received, stored, prepared for market, or handled. The committee shall make such checks of oranges or audits of handlers' records as it deems appropriate or which are requested by the Secretary to insure that accurate information as required in this part is being furnished by handlers.

(d) All reports and information submitted by handlers pursuant to the provisions of this part shall be received by and at all times be in the custody of one or more designated employees of the committee. Such employees shall not disclose to any person, other than the Secretary upon request therefor, data, or information obtained or extracted from

such reports and records which might affect the trade position, financial condition, or business operation of the particular handler from whom received: *Provided*, That such data and information may be combined, and made available in the form of general reports in which the identities of the individual handlers furnishing the information is not disclosed.

Section 907.80 is revised to read as follows:

§ 907.80 Compliance.

Except as provided in this part, no person shall handle oranges during any prorate period in which a regulation issued by the Secretary pursuant to § 907.52 is in effect, unless such oranges are, or have been, handled pursuant to an allotment therefor, or unless such person is otherwise permitted to handle such oranges under the provisions of this part; and no person shall handle oranges except in conformity with the provisions of this part and the regulations issued under this part.

Section 907.83 is amended by revising paragraphs (c), (d) and (e) and adding a new paragraph (f) to read as follows:

§ 907.83 Termination.

* * * * *

(c)(1) The Secretary shall terminate the provisions of this subpart at the end of a fiscal year in which the Secretary has found by referendum that such termination is favored by producers who, during a representative period determined by the Secretary, have been engaged in the production for market of oranges in the production area: *Provided*, That such termination shall be effective only if announced on or before September 15 of the then current fiscal year.

(2) To determine whether continuance is favored by producers, the required percentages set forth in the act with respect to producer approval of the issuance of a marketing agreement and order regulating the handling of citrus fruits produced in any area producing what is known as California citrus fruits (approval by three-fourths of the producers who, during a representative period, determined by the Secretary, have been engaged, within the production area, in the production of navel oranges for market; or by producers who, during such representative period, have produced for market at least two-thirds of the volume of navel oranges produced within the production area for market) shall be used. In the event that a referendum is utilized to aid in making this determination, such required percentages for continuance shall be held to be complied with if, of the total number of producers, or the total volume of navel oranges produced for market, as the case may be, represented in such referendum, the percentage favoring continuance is equal to or in excess of the percentage required.

(d) Upon recommendation of the committee, received not later than January 15 of an odd numbered year, the Secretary shall conduct a referendum prior to March 15 of such year to ascertain whether continuance of this part is favored by growers as determined in accordance with (c)(2) of this section. The committee, with the approval of the Secretary, shall adopt such rules and regulations as necessary to establish the basis for the recommendation provided for in this section.

(e) The Secretary shall conduct a referendum by August 1, of the sixth year following the effective date of this section and no later than August 1, every sixth year thereafter to find whether, in accordance with paragraph (c) of this section, continuance of the order is favored by producers.

(f) The provisions of this part shall, in any event, terminate whenever the provisions of the act authorizing them cease to be in effect.

Order [1] Amending the Order, as Amended, Regulating the Handling of Valencia Oranges Grown in Arizona and Designated Part of California

Section 908.0 *Findings and determinations.* The findings and determinations hereinafter set forth are supplementary and in addition to the findings and determinations made in connection with the issuance of the order and each of the previously issued amendments thereto; and all of said previous findings and determinations are hereby ratified and affirmed except insofar as such findings and determinations may be in conflict with the findings and determinations set forth herein.

(a) *Findings upon the basis of the hearing record.* Pursuant to the Agricultural Marketing Agreement Act of 1937, as amended (7 U.S.C. 601–674), and the applicable rules of practice and procedure effective thereunder (7 CFR Part 900), a public hearing was held in Bakersfield, California, on April 5–22, 1983, upon proposed amendments to the marketing agreement, as amended, and to Order No. 908, as amended (7 CFR Part 908), regulating the handling of Valencia oranges grown in Arizona and Designated Part of California. Upon the basis of the evidence introduced at such hearing and the record thereof, it is found that:

(1) The said order, as amended and as hereby further amended, and all of the terms and conditions thereof, will tend to effectuate the declared policy of the act;

(2) The said order, as amended and as hereby further amended, regulates the handling of Valencia oranges grown in the designated production area in the same manner as, and is applicable only to persons in the respective classes of commercial or industrial activity specified in, the marketing agreement and order upon which hearings have been held;

(3) The said order, as amended and as hereby further amended, is limited to its application to the smallest regional production area that is practicable consistent with carrying out the declared policy of the act;

(4) The said order, as amended and as hereby further amended, prescribes, so far as practicable, such different terms, applicable to different parts of the production area, as are necessary to give due recognition to differences in the production and marketing of Valencia oranges; and

(5) All handling of Valencia oranges grown in the designated production area is in the current of interstate or foreign commerce or directly burdens, obstructs, or affects such commerce.

It is, therefore, ordered, That, on and after the effective date thereof, all handling of Valencia oranges grown in the production area shall be in conformity to, and in compliance with, the terms and conditions of the said order, as amended, and as hereby further amended as follows:

The provisions of the proposed marketing agreement and order, amending the order, contained in the recommended decision issued by the Administrator on April 5, 1984, and published in the Federal Register on April 11, 1984 (49 FR 14360), shall be and are the terms and provisions of this order, amending the order, subject to changes in §§ 908.21, 908.22, 908.29(n), 908.30, 908.31, 908.33, 908.50, 908.51(b), 908.54(b), and 908.60 and are set forth in full herein.

PART 908—[AMENDED]

The first sentence of § 908.11 is revised to read as follows:

[1] This order shall not become effective unless and until the requirements of § 900.14 of the rules or practice and procedure governing proceedings to formulate marketing agreements and orders have been met.

§ 908.11 Handle.

"Handle" means to buy, sell, consign, transport, or ship oranges (except as a common or contract carrier of oranges owned by another person), or in any other way to place oranges in the current of commerce, between the State of California and any point outside thereof in the continental United States or Canada, or within the State of California, or between the State of Arizona and any point outside thereof in the continential United States or Canada, or within the State of Arizona. * * *

Section 908.18 is revised to read as follows:

§ 908.18 Carload.

"Carload" means a quantity of oranges equivalent to 1,000 cartons of oranges, or such other quantity of oranges, as may be established by the committee with the approval of the Secretary.

Section 908.19 is revised to as read follows:

§ 908.19 Export.

"Export" means shipments of oranges to points outside the continental United States and Canada.

Section 908.20 is revised to read as follows:

§ 908.20 Establishment and membership.

There is hereby established a Valencia Orange Administrative Committee consisting of 11 members, for each of whom there shall be one alternate, and for each grower and handler member an additional alternate. Six of the members and their respective alternates shall be growers. Four of the members and their respective alternates shall be handlers, or employees of handlers, or employees of central marketing organizations. One member of the committee and an alternate of such member shall be selected as provided in § 908.23 and shall be referred to in this part as the "public" member of the committee. The six members of the committee who shall be growers are referred to in this part as "grower" members of the committee and the four members who shall be handlers, or employees of handlers, or employees of central marketing organizations are referred to in this part as "handler" members of the committee.

Section 908.21 is revised to read as follows:

§ 908.21 Term of office.

The term of office of each member and alternate member of the committee shall be for a period of two years, and such terms shall begin on February 1 of each even-numbered year: *Provided*, That such members and alternates shall serve in such capacities for the portion of the term of office for which they are selected and qualify and until their respective successors are selected and have qualified. The consecutive terms of office of members, not including alternate members or additional alternate members, shall be limited to three terms. No person having service three consecutive terms shall serve as a member, alternate member or additional alternate member for the next succeeding term of office. Members of the committee who have served three consecutive two-year terms as of February 1, 1986, are not eligible to serve on the committee as member or alternative until February 1, 1988.

Section 908.22 is amended by revising paragraphs (a) and (b), (c), (d), (e), and (f), and adding new paragraph (g) to read:

§ 908.22 Nominations.

(a) With respect to paragraphs (b) and (c) of this section, the time and manner of nominating members, alternate members, and additional alternate members of the committee shall be prescribed by the Secretary. With respect to paragraph (d) of this section, the committee, with the approval of the Secretary, shall adopt procedural rules and regulations to be observed for (1) the selection of candidates for member, alternate member, and additional alternate member nominations, and (2) the conducting of such nominations by mail balloting.

(b) Any cooperative marketing organization, or the growers affiliated therewith, which handled more than 50 percent of the total volume of oranges handled in fresh domestic channels, including Canada, during the marketing year in which nominations for members and alternate members of the committee are submitted shall nominate no more than three grower members, three alternate grower members, three additional alternate grower members, two handler members, two alternate handler members and two additional alternate handler members of the committee. In the event the no cooperative marketing organization handled more than 50 percent of the total volume of oranges handled during the marketing year in which nominations for members and alternate members of the committee are submitted, committee representation shall be reallocated in accordance with § 908.29(n) of this part.

(c) All cooperative marketing organizations which are not qualified under paragraph (b) of this section, or the growers affiliated therewith, shall nominate one grower member, one alternate grower member, one additonal alternate grower member, one handler member, one alternate handler member, and one additional alternate handler member.

(d) All growers which are not qualified under paragraphs (b) and (c) of this section shall nominate two grower members, two alternate grower members, two additional alternate grower members, one handler member, one alternate handler member, and one additional alternate handler member of the committee.

(e) When voting for nominees, each grower shall be entitled to cast one vote which shall be cast on behalf of such grower, the growers' agents, subsidiaries, affiliates, and representatives.

(f) The public member and an alternate public member of the committee shall be selected by the Secretary pursuant to § 908.23 and shall not be growers or handlers, or employees, agents, or representatives of growers or handlers (other than a charitable or educational institution which is a grower or handler), or of a central marketing organization.

(g) Grower and handler member, alternate member and additional alternate member positions may be allocated pursuant to § 908.29(n) of this part.

Section 908.23 is revised to read as follows:

§ 908.23 Selection.

From the nominations made pursuant to § 908.22(b) and from other qualified growers and handlers, the Secretary shall select three grower members and two handler members of the committee, and alternate and an additional alternate to each such member. From the nominations made pursuant to § 908.22(c) or from other qualified growers and handlers the Secretary shall select one grower member of the committee, an alternate and an additional alternate to such grower member; also one handler member, an alternate and an additional alternate to such handler member. From the nominations made pursuant to § 908.22(d) or from other qualified growers and handlers the Secretary shall select two grower members of the committee, an alternate and an additional alternate to each such grower members; also one handler member of the committee, an alternate and an

additional alternate to such handler member. The Secretary shall select one public member and one alternate public member of the committee in his discretion from qualified persons suggested by the public, and industry at large, as well as the respective committees.

Section 908.29 is amended by revising paragraph (n) to read as follows.

§ 908.29 Duties.

* * * * *

(n) With the approval of the Secretary, to reapportion the number of grower members or handler members on the Valencia Orange Administrative Committee who are nominated pursuant to § 908.22(b), (c), and (d). Any such reapportionment shall be based, insofar as practicable, upon the proportionate amount of Valencia oranges handled by the respective types of marketing organizations: *Provided,* That any cooperative which handled 50 percent or less, but more than 40 percent of the total quantity of oranges handled in fresh domestic channels, including Canada, shall be entitled to two grower members, two handler members, their respective alternates and additional alternates; and any reapportionment based on § 907.29(n)(1) shall be allocated proportionally to either or both groups which have the greatest increase in oranges handled in fresh domestic channels. Any reapportionment of membership shall provide that no grower group could nominate more than five members regardless of the volume handled and each grower would be entitled to nominate at least one grower member provided that such group handled at least five percent of the volume handled.

Section 908.30 is amended by revising paragraph (a) to read as follows:

§ 908.30 Procedure.

(a) Seven members of the committee shall constitute a quorum and any action of the committee shall require at least seven concurring votes.

* * * * *

Section 908.31 is revised to read as follows:

§ 908.31 Expenses and compensation.

The members and alternates of the committee shall be reimbursed for expenses necessarily incurred by them in the performance of their duties under this part. Members and alternates shall receive compensation at a rate to be recommended by the committee and approved by the Secretary which rate shall not exceed $100 per day or portion thereof spent in performing such duties. The public member and alternate shall receive compensation at a rate to be recommended by the committee and approved by the Secretary which rate may be greater than $100, but shall not exceed $250 per day or portion thereof spent in performing such duties.

Section 908.33 is revised to read as follows:

§ 908.33 Research and development.

The committee, with the approval of the Secretary, may establish or provide for the establishemnt of marketing research and development projects designed to assist, improve, or promote the marketing, distribution, and consumption of Valencia oranges. Such projects may provide for any form of marketing promotion, including paid advertising. The expense of such projects shall be paid from funds collected pursuant to this part.

A new § 908.34 is added to read as follows:

§ 908.34 Consumer affairs advisors.

The committee may appoint such consumer affairs advisors as it deems appropriate and determine the compensation and define the duties of such advisors.

Add a new paragraph (d) to § 908.41 to read:

§ 908.41 Assessments.

* * * * *

(d) Assessments not paid within a time prescribed by the committee may be made subject to interest or late payment charges, or both. The period of time, rate of interest, and late payment charge will be as recommended by the committee and approved by the Secretary: *Provided,* That when interest or late payment charges are in effect, they shall be applied to all assessments not paid within the prescribed period of time.

Section 908.50(a) is revised to read:

§ 908.50 Marketing policy.

(a) Prior to the recommendation for regulation for each prorate district, the committee shall submit to the Secretary its marketing policy for the ensuing season. Such marketing policy shall contain the following information: (1) The available crop of oranges in the prorate district, including estimated quality and composition of sizes; (2) the estimated utilization of the crop, showing the quantity and percentages of the crop that will be marketed in domestic, export, and by-product channels, together with quantities otherwise to be disposed of; (3) a schedule of estimated shipments to be recommended to the Secretary during the ensuing season; (4) available supplies of competitive oranges in all producing areas of the United States; (5) level and trend of consumer income; (6) estimated supplies of competitive cirtrus commodities; (7) any other pertinent factors bearing on the marketing of oranges.

In formulating its marketing policy the committee should give due consideration to the onset and duration of prorate, the length of prorate periods and size regulation. In the event that it becomes advisable substantially to modify such marketing policy, the committee shall submit to the Secretary a revised marketing policy setting forth the information as required in this paragraph.

Section 908.51 is amended by revising paragraphs (a) and (c) to read as follows. Paragraph (b) is shown for the convenience of the reader.

§ 908.51 Recommendations for volume regulation.

(a) The committee may recommend to the Secretary the total quantity of oranges which it deems advisable to be handled during the next succeeding prorate period in each prorate district. *Provided,* That the committee may establish a limitation on the maximum number of prorate periods during a season and the beginning and ending dates for such periods. If, for any reason, the committee recommends the issuance of volume regulation but fails to recommend to the Secretary the total quantity of oranges which it deems advisable to be handled during the next succeeding prorate period in each prorate district, views of the committee members with respect to its failure to act shall submitted promptly to the Secretary.

(b) In making its recommendation, the committee shall provide equity of marketing opportunity to handlers in all districts and shall give due consideration to the following factors: (1) Market prices for oranges, including market prices by grades and sizes; (2) supply of oranges on track at, and en route to, the principal markets; (3) supply, maturity, and condition of oranges in the area of production, including the grade and size composition thereof; (4) market prices and supplies of citrus fruits from California, Arizona, and competitive producing areas, and supplies of other competitive fruits; (5) trend level in consumer income; and (6) an evaluation and recommendation concerning the beginning and ending dates for volume regulation and the

length of each prorate period; and (7) other relevant factors.

(c) At any time prior to or during the prorate period for which the Secretary pursuant to § 908.52, has fixed the quantity of oranges which may be handled, the committee may, if such action is deemed advisable, recommend to the Secretary that such quantity be increased for such prorate period. Any such recommendation, together with the committee's reasons for such recommendation, shall be submitted promptly to the Secretary.

* * * * *

Section 908.52 is revised to read as follows:

§ 908.52 Issuance of volume regulation.

Whenever the Secretary shall find, from the recommendations and information submitted by the committee, or from other available information, that to limit the quantity of oranges which may be handled in each prorate district during a specified prorate period will tend to effectuate the declared policy of the act, the Secretary shall fix such quantity. Such regulation may be made effective, as authorized by the act, irrespective of whether the season average price for Valencia oranges is in excess of the parity price specified therefor in the act. The quantity so fixed may be increased by the Secretary at any time prior to or during such period.

Section § 908.53 is amended by revising paragraphs (b), (c), (f), (g) and (h) and adding new paragraph (i) as follows:

§ 908.53 Prorate bases.

* * * * *

(b) Such application shall be substantiated in such manner and shall be supported by such evidence as the committee may require, and shall include at least (1) the name and address of the producer or duly authorized agent, if any, for each grove or portion thereof, the fruit of which is included in the quantity or oranges available for current shipment by the applicant; (2) an accurate description of the location of each such grove or portion thereof, including the number of acres contained therein; (3) an estimate of the total quantity of oranges available for current shipment in terms of a unit of measure designated by the committee, contained in each grove or portion thereof described in paragraph (b)(2) of this section; and (4) an estimate of the total quantity of oranges available for current shipment by the applicant in terms of a unit of measure designated by the committee. If at the time of filing of an application under this section the committee finds that there is an error, omission, inaccuracy or inadequacy in such application, or that any estimates contained in such application are not reasonbly calculated to apprise the committee of the information required by this section, it shall return the application to the applicant for correction or completion. Applicants may resubmit applications to the committee for its consideration at any subsequent time.

(c) Each application shall include a certification by the handler that the handler has control, for all purposes relating to this part, of the oranges described in the application.

* * * * *

(f) When any person having a prorate base has remaining a quantity smaller than such person's allotment, such person shall be removed from the prorate base or that prorate base shall be reduced so that the allotment based thereon shall not exceed the quantity of oranges remaining under such handler's control; *Provided,* That such handler shall receive due allotment to the extent necessary to pay back loans which the handler is obligated to repay in any prorate period that repayment of loans may be due.

(g) The committee shall determine the accuracy of the information submitted pursuant to this section. Except as provided in (b) of this section, whenever the committee finds that there is an error, omission, inaccuracy or inadequacy in any such information, it shall correct the same after granting the person who submitted such report a reasonable opportunity to discuss with the committee the factors considered in making the correction. If it is determined that an error, omission, or inaccuracy has resulted in the establishment of a smaller or a larger quantity of oranges available for current shipment than that to which a person was entitled under this part, such quantity shall be increased or decreased, over such period as may be determined by the committee, by an amount necessary to correct the error, omission, inaccuracy or inadequacy.

(h) During any prorate period when volume regulation is likely to be recommended, the committee shall compute, with respect to each prorate district, the total quantity of oranges available for current shipment by each person who has applied for a prorate base and for allotments, except as provided in paragraph (b) of this section. On the basis of such computation, the committee shall fix a prorate base for each person who is entitled thereto. Such prorate base shall represent the ratio between the total quantity of oranges available for current shipment in the particular prorate district by each applicant and the total quantity of oranges available for current shipment in such district by all such applicants. The committee shall notify the Secretary of the prorate base fixed for each person and shall notify each such person of the prorate base so fixed.

(i) The committee shall, with the approval of the Secretary, adopt procedural rules and regulations to effectuate the provisions of this § 908.53.

Section 908.54 is amended by adding a new heading to the existing paragraph and designating that paragraph as paragraph (a), and adding a new paragraph (b). As amended § 908.54 reads as follows:

§ 908.54 Allotments.

(a) *General maturity allotments.* Whenever the Secretary has fixed the quantity of oranges which may be handled during any prorate period in a prorate district, the committee shall calculate the quantity of oranges which may be handled by each person during such prorate period. The said quantity shall be the allotment of such person and shall be in an amount equivalent to the product of the prorate base of such person and the total quantity of oranges grown in such prorate district and fixed by the Secretary as the total quantity of oranges which may be handled during such prorate period. The committee shall give reasonable notice to each person of the allotment computed for such person pursuant to this part.

(b) *Marketing incentive allotments.* During any prorate period in which volume regulation is in effect, any handler may handle, in addition to other allotment, an amount of oranges equivalent to 10 percent of the handler's prorate period allotment in each of three separate prorate periods and at such other times and in such other amounts as may be recommended by the committee and approved by the Secretary. Use of marketing incentive allotment may be made by the handler upon prior notification to the committee. This incentive increase is in addition to the allowance for overshipments provided for in § 908.55. The committee shall, with the approval of the Secretary, adopt rules and regulations to establish the type of marketing incentive programs that would be available for marketing incentive allotments, as well as provide for a deduction against the quantity of oranges which a handler has available for current shipment in the event that the handler fails to use all or a portion of the marketing incentive

allotment issued or uses such marketing incentive allotment for other than specified purposes. Such rules and regulations may also require that the handler, after each marketing incentive allotment period is over, furnish the committee with reports, records, and other documentation to substantiate the use of marketing incentive allotment.

Section 908.55 is revised to read as follows:

§ 908.55 Overshipments.

During any peroid for which the Secretary has fixed the total quantity of oranges which may be handled, any person who has received an allotment for such prorate period as calculated under § 908.54(a), and whose total allotment is not loaned, or is not required for the repayment of an allotment loan or as a deduction for a prior overshipment, may handle in addition to such allotment an amount of such oranges equivalent to 20 percent of such allotment, or one carload, whichever is the greater: *Provided, however,* That the committee may, with the approval of the Secretary, reduce such 20 percent to a percentage not less than 10 percent: *And Provided further,* That, if subsequent to the determination of general maturity, allotment (other than short life allotment) is forfeited in any prorate district during any prorate period, such forfeiture shall be used to reduce the amount of maximum permissible overshipments made during such prorate period, unless the forfeiting handler shall have made a bona fide and timely offer to the committee to lend the handler's undershipment. Such forfeiture shall be first applied to handlers within such district in which the forfeiture occurred and second to qualified handlers in other districts. Allocation of forfeitures to handlers who have overshipped shall be made in proportion to, but not in excess of, the quantity overshipped by each such handler. In the case of short-life allotments, any forfeiture thereof shall be credited as above provided only against overshipment of allotments issued pursuant to Section 908.54(a). However, no handler who has overshipped more than the maximum permissible under this section shall participate in the credits allowed by this provision. The quantity of oranges so handled in excess of each such person's allotment (but not exceeding an amount equivalent to the excess shipments permitted under this section) shall be deducted from each such person's allotment for the next prorate period: *Provided,* That no such deduction shall apply when such quantity is entirely reduced by application of forfeited allotment. If such person's allotment for such prorate period is in an amount less than the excess shipments permitted under this section, as reduced by the application of forfeited allotment, the remaining quantity shall be deducted from succeeding prorate period allotment issued to each such person until such excess has been entirely offset: *And Provided further,* That no overshipment incurred during one season shall be deducted from allotments issued during the following season. The provisions of this section shall not apply to any person who, during any prorate period, has not received an allotment under this subpart for such prorate period. The committee, with the approval of the Secretary, shall adopt procedural rules and regulations to effectuate the provisions of this § 908.55.

Section 908.56 is revised to read as follows:

§ 908.56 Undershipments.

If any person handles during any week or longer prorate period a quantity of oranges; covered by a regulation, issued pursuant to § 908.52, in an amount less than the allotment of oranges for such period, such person may handle, in addition to such person's allotment for the next two succeeding weeks only, a quantity of such oranges equivalent to such undershipment except that the undershipment of early maturity allotment shall not entitle a handler to so handle an additional quantity of oranges: *Provided,* That with the approval of the Secretary, the committee may increase or decrease the number of weeks or prorate periods over which undershipments of allotment may be carried forward.

Section 908.57 is amended by revising paragraph (c) to read as follows:

§ 908.57 Allotment loans.

* * * * *

(c) An allotment shall be loaned, pursuant to paragraph (a) of this section, for use only during the prorate period for which such allotment was issued. Persons securing repayment of an allotment loan may use such allotment only during the prorate period in which the repayment is made.

* * * * *

Section 908.59 is revised to read as follows:

§ 908.59 Priority of allotments.

During any prorate period in which a person received an allotment, pursuant to § 908.54, and has the right to handle a quantity of oranges in addition to the quantity represented by such allotment, by reason of (a) an undershipment of an allotment pursuant to § 908.56; or (b) the repayment of a loaned allotment pursuant to § 908.57; or (c) a borrowed allotment pursuant to § 908.57, and such person handles a quantity of oranges which is less than the total quantity of such oranges which such person may handle during such prorate period, the amount of such oranges handled shall first apply to such person's current prorate period allotment (or to that portion which is not used pursuant to § 908.55 or § 908.57). The remaining amount, if any, shall be applied in the following order: second, to any undershipment of allotments, pursuant to § 908.56; third, to any allotment repaid to such person pursuant to § 908.57; fourth, to any allotment borrowed, pursuant to § 908.57

Revise § 908.60 to read:

§ 908.60 Early maturity allotments.

Notwithstanding the provisions of § 908.54(a) the committee may, prior to the reaching of general maturity, issue special allotments for the handling of oranges of early maturity. Handlers controlling oranges of early maturity may apply to the committee for such allotments on forms prescribed by the committee and shall furnish to the committee such information as it may require. On the basis of all available information and after consideration of all of the factors enumerated in § 908.51(b) the committee shall determine the extent to which early maturity allotment shall be granted. Total early maturity allotments approved by the committee shall be allocated in an equitable manner among the requesting handlers who qualify therefor. Early maturity allotments issued to any handler may be used only during the prorate period for which issued, and the undershipment of any such allotment shall not entitle such handler to handle an additional quantity of oranges due to such undershipment. Upon the reaching of general maturity, the quantity of oranges available for current shipment of any handler who failed to use all of the early maturity allotments issued to such handler shall be adjusted by deducting therefrom an amount not exceeding twice the amount of unused early maturity allotment. Early maturity allotments are transferrable to other handlers who received early maturity allotments in the same prorate period, except that the undershipment of early maturity allotment shall not entitle a handler to so handle an additional quantity of oranges: *Provided,* That transfers of early maturity allotments shall be made

through the committee: *And Provided Further,* That, upon such transfer of allotment, the transferee shall be obligated to use the transferred allotment during the prorate period for which it was issued and if such handler fails to do so shall have such handler's oranges available for current shipment adjusted in the same manner as if the transferred allotment had been issued to such handler by the committee. The committee shall, with the approval of the Secretary, adopt procedural rules and regulations to effectuate the provisions of this part. Such rules and regulations may authorize the reduction of each handler's quantity of oranges available for current shipment by all or a portion of the amount of oranges each such handler ships prior to general maturity and may provide for other appropriate modifications and adjustments necessary to carry out these provisions.

§ 908.61 [Amended]

Section 908.61 is amended by changing the reference to "§ 908.54" to read "§ 908.54(a)" in the first sentence thereof.

§ 908.61a [Amended]

Section 908.61a is amended by changing the reference to § 908.54" to read "§ 908.54(a)" in the first sentence thereof.

Section 908.64 is revised to read as follows:

§ 908.64 Issuance of size regulation.

Whenever the Secretary shall find, from the findings, recommendations, and information submitted by the committee, or from other available information, that to limit the handling of oranges by sizes would tend to effectuate the declared policy of the act, the Secretary shall fix the sizes of oranges grown each such prorate district which may be handled during the specified period. When any such size regulation restricts the handling of a portion of a specified size, the quantity of such size that may be handled by a handler during a particular prorate period shall be established as a percentage of (a) the allotment issued to such handler during the particular prorate period when volume regulation is in effect, and (b) the total weekly volume handled by such handler when volume regulation is not in effect. Any such regulation may provide that the handling of oranges shipped to Canada shall be subject to size regulation different from the size regulation applicable to the handling of other shipments of oranges. The committee shall be informed immediately of any such regulation issued by the Secretary, and the committee shall promptly give adequate notice thereof to all handlers.

Section 908.67 is revised to read as follows:

§ 908.67 Oranges not subject to regulation.

Except as otherwise provided in this section, nothing contained in this subpart shall be construed to authorize any limitation of the right of the initial handler of oranges to: (a) Handle oranges to charitable institutions for consumption by such institutions or to relief agencies for distribution by such agencies: (b) handle oranges to commercial processors for processing into products, including juice: (c) export oranges or handle oranges to exporters for export purposes; (d) handle oranges by parcel post or by railway express; or (e) handle oranges in such minimum quantities or in such types of shipments as the committee may, with the approval of the Secretary, prescribe. No assessment shall be levied pursuant to § 908.41 on oranges disposed of for the purposes specified in this section. The committee shall prescribe and periodically review, with the approval of the Secretary, such rules, regulations, and safeguards as it may deem necessary to prevent oranges shipped under the provisions of this section from entering into commercial channels of trade contrary to or in violation of this subpart.

Section 908.70 is revised to read as follows:

§ 908.70 Weekly report.

On or before such day of each week as may be designated by the committee, each person who first handles oranges shall report to the committee, in such manner as may be designated and on forms made available by it, the following information with respect to the total of all oranges disposed of by each such handler during the immediately preceding week: (a) The total quantity handled; (b) the total quantity disposed of for manufacture into by-products, showing the identity of each by-products processor involved and the quantity of each; (c) the total quantity disposed of for export, showing the destination and quantity of each such disposition; (d) the total quantity shipped for disposition to persons on relief, including quantity donated for charitable purposes, and shipments by parcel post or express, showing the destination and quantity of each such shipment; and (e) the total quantity disposed of otherwise, showing manner and quantity of each such disposition.

Section 908.71 is revised to read as follows:

§ 908.71 Manifest report.

Each person who first handles oranges shall furnish to the committee information regarding the size of oranges in each standard packed carton or its equivalent handled by such handler whether such shipments were destined to points in the United States and Alaska or to Canada and shall mail or deliver such information to said committee or its duly authorized representative within 24 hours after shipment is made in such manner as the committee shall prescribe and upon forms prepared by it.

Add a new center heading "Records and Retention" following § 908.72 and a new § 908.73 to read:

Records and Retention

§ 908.73 Reports.

(a) Each handler shall maintain such records which will clearly show the details of such handler's receipts and acquisition of oranges, sales, shipments, dispositions, inventories and such other specific information as prescribed by the committee and approved by the Secretary which will relate to the handling and disposition of oranges.

(b) All such records specified shall be retained by the handler for a period of three years following the end of the fiscal year in which such transactions occurred. If within the three-year period, the committee notifies the handler in writing that the retention of such records, or specified records, is necessary in connection with a proceeding under the act, a court action, or a compliance investigation by the Secretary or the committee specified in such notice, the handlers shall retain such records, or specified records, until further written notification from the committee. The committee shall give further written motification to the handler when retention of the records is no longer necessary.

(c) Each handler shall make available to authorized representatives of the committee and the Secretary at any time during reasonable business hours all records provided for in this part for examination and audit, and shall permit access to all premises where records are maintained or stored and where oranges are received, stored, prepared for market, or handled. The committee shall make such checks of oranges or audits of handlers' records as it deems appropriate or which are requested by the Secretary to insure that accurate

information as required in this part is being furnished by handlers.

(d) All reports and information submitted by handlers pursuant to the provisions of this part shall be received by and at all times be in the custody of one or more designated employees of the committee. Such employees shall not disclose to any person, other than the Secretary upon request therefor, data, or information obtained or extracted from such reports and records which might affect the trade position, financial condition, or business operation of the particular handler from whom received: *Provided,* That such data and information may be combined, and made available in the form of general reports in which the identities of the individual handlers furnishing the information is not disclosed.

Section 908.80 is revised to read as follows:

§ 908.80 Compliance.

Except as provided in this part, no person shall handle oranges during any prorate period in which a regulation issued by the Secretary pursuant to § 908.52 is in effect, unless such oranges are, or have been, handled pursuant to an allotment therefor, or unless such person is otherwise prermitted to handle such oranges under the provisions of this part; and no person shall handle oranges except in conformity with the provisions of this part and the regulations issued under this part.

Section 908.83 is amended by revising paragraphs (c), (d) and (e) and adding a new paragraph (f) to read as follows:

§ 908.83 Termination.

* * * * *

(c)(1) The Secretary shall terminate the provisions of this part at the end of a crop year in which the Secretary has found by referendum that such termination is favored by producers who, during a representative period determined by the Secretary, have been engaged in the production for market of oranges in the production area: *Provided,* That such termination shall be effective only if announced on or before December 1 of the then current fiscal year.

(2) To determine whether continuance is favored by producers, the required percentages set forth in the act with respect to producer approval of the issuance of a marketing agreement and order regulating the handling of citrus fruits produced in any area producing what is known as California citrus fruits (approval by three-fourths of the producers who, during a representative period, determined by the Secretary, have been engaged, within the production area, in the production of Valencia oranges for market; or by producers who, during such representative period, have produced for market a least two-thirds of the volume of Valencia oranges produced within the production area for market) shall be used. In the event that a referendum is utilized to aid in making this determination, such required percentages for continuance shall be held to be complied with if, of the total number of producers, or the total volume of Valencia oranges produced for market, as the case may be, represented in such referendum, the percentage favoring continuance is equal to or in excess of the percentage required.

(d) Upon recommendation of the committee, received not later than August 15 of an odd numbered year, the Secretary shall conduct a referendum prior to October 15 of such year to ascertain whether continuance of this part is favored by growers as determined in accordance with (c)(2) of this section. The committee, with the approval of the Secretary, shall adopt such rules and regulations as necessary to establish the basis for the recommendation provided for in this section.

(e) The Secretary shall conduct a referendum by October 15, of the sixth year following the effective date of this section and no later than October 15, every sixth year thereafter to find whether, in accordance with paragraph (c) of this section, continuance of the order is favored by producers.

(f) The provisions of this part shall, in any event, terminate whenever the provisions of the act authorizing them cease to be in effect.

[FR Doc. 84-18922 Filed 7-13-84; 11:01 am]
BILLING CODE 3410-02-M

---

7 CFR Part 1004

[Docket No. AO-160-A62-R01]

Milk in the Middle Atlantic Marketing Area; Recommended Decision and Opportunity To File Written Exceptions on Proposed Amendments to Tentative Marketing Agreement and to Order

AGENCY: Agricultural Marketing Service.

ACTION: Proposed rule.

SUMMARY: This decision recommends increasing the percentage of a cooperative association's member milk supply that may be diverted from pool plants to nonpool plants, and allowing a federation of cooperatives to act as a handler in diverting the member milk of its individual cooperative associations to nonpool plants. It also recommends that a distributing plant that was fully regulated under the order in one month should remain fully regulated during the immediately succeeding two months regardless of whether or not its total Class I disposition during those months meets the order's minimum pooling requirement. A request to omit a recommend decision in this proceeding is denied.

The proposed amendments are based on the record of a public hearing held May 23, 1984, at Philadelphia, Pennsylvania, and are necessary to reflect current marketing conditions and to assure orderly marketing in the Middle Atlantic marketing area.

DATE: Comments are due on or before July 25, 1984.

ADDRESS: Comments (five copies) should be filed with the Hearing Clerk, Room 1077, South Building, United States Department of Agriculture, Washington, D.C. 20250.

FOR FURTHER INFORMATION CONTACT: Maurice M. Martin, Marketing Specialist, Dairy Division, Agricultural Marketing Service, United States Department of Agriculture, Washington, D.C. 20250, (202) 447-7183

SUPPLEMENTARY INFORMATION: Prior document in this proceeding:

Notice of Hearing: Issued May 2, 1984; published May 8, 1984 (49 FR 19503).

Preliminary Statement

Notice is hereby given of the filing with the Hearing Clerk of this recommended decision with respect to proposed amendments to the tentative marketing agreement and the order regulating the handling of milk in the Middle Atlantic marketing area. This notice is issued pursuant to the provisions of the Agricultrual Marketing Agreement Act of 1937, as amended (7 U.S.C. 601 *et seq.*), and the applicable rules of practice and procedure governing the formulation of marketing agreements and marketing orders (7 CFR Part 900).

Interested parties may file written exceptions to this decision with the Hearing Clerk, U.S. Department of Agriculture, Washington, D.C., 20250; by the 7th day after publication of this decision in the Federal Register. It is necessary to limit the time for filing exceptions to seven days after Federal Register publication in order to complete this proceeding so that an amended order would be effective not later than September 1, 1984. Five copies of the

exceptions should be filed. All written submissions made pursuant to this notice will be made available for public inspection at the office of the Hearing Clerk during regular business hours (7 CFR 1.27(b)).

The proposed amendments set forth below are based on the record of a public hearing held at Philadelphia, Pennsylvania, on May 23, 1984, pursuant to a notice of hearing issued May 2, 1984 (49 FR 19503). The hearing was a reopening of a hearing held July 19–October 26, 1983, which principally involved consideration of the expansion of the marketing area. The hearing was reopened for the limited purpose of receiving evidence with respect to the economic and marketing conditions in the Middle Atlantic area which relate to the diversion limits on producer milk and the pooling requirements for distributing plants.

The hearing notice specifically invited interested persons to present evidence concerning the probable regulatory and informational impact of the proposals on small business. However, no participants at the hearing testified about any potentially adverse impact of the proposals on small businesses.

Further, William T. Manley, Deputy Administrator, Agricultural Marketing Service, has certified that under the standards of the Regulatory Flexibility Act (Pub. L. 96–354), the proposed amendments, if adopted, will not have a significant impact on a substantial number of small entities. The proposed amendments would promote orderly marketing of milk by producers and regulated handlers.

The material issues on the record of hearing relate to:

1. Diversion of producer milk.
2. Pool distributing plant definition.
3. Whether emergency marketing conditions exist that warrant the omission of a recommended decision and the opportunity to file written exceptions thereto.

Findings and Conclusions

The following findings and conclusions on the material issues are based on evidence presented at the hearing and the record thereof:

1. Diversion of Producer Milk

Limits on diversions of the milk of members of a cooperative association to nonpool plants should be increased from 40 to 50 percent, and provision should be made for producer milk to be diverted to nonpool plants for the account of a federation of cooperatives. There was no proposal for any increase in allowable diversions of nonmember milk supplies nor any support for such action. Therefore there should be no change in diversion limits on nonmember milk.

The order now provides that a cooperative's monthly diversions of producer milk to nonpool plants during September through February may not exceed 40 percent of the volume of member milk handled by the cooperative association during the month. Alternatively, up to 18 days' production of each dairy farmer may be diverted during the month to nonpool plants. No diversion limitations apply during the months of March through August.

A federation of four cooperative associations, Atlantic Processing Inc. (API), and an additional cooperative association, Inter-State Milk Producers Cooperative (Inter-State), proposed that the diversion allowances for cooperative member milk be increased to 50 percent. In addition, API proposed that a federation of cooperatives be allowed to divert for its account the milk of member producers.

The witness representing API testified that higher diversion limits are needed to assure that the milk of producers historically associated with the Middle Atlantic market will continue to be eligible to share in the marketwide pool. He explained that the cheese-processing portion of a reserve processing pool plant owned and operated by API at Allentown, Pennsylvania, had been sold on April 30, 1984. He stated that the plant had been operated as a pool plant for many years and served as an outlet for a significant portion of the regularly associated reserve supply of milk for the market. Because of the sale, the witness testified, the cheese-processing portion of the plant would no longer have pool status, and deliveries of producer milk to that location would be diversions to a nonpool plant. Based on API's milk deliveries during the months of October and December 1983, the witness estimated that over forty percent of API member milk will be delivered to the nonpool cheese-processing facility at Allentown during the months of September through December 1984. Without an increase in the percentage of allowable diversions, the witness stated, API would have to move milk uneconomically to assure that its members producers would continue to have all of their milk pooled, or the milk of some producers who have long been associated with the Order 4 market would have to be excluded from the marketwide pool.

The API witness also testified in support of API's proposal to allow milk to be diverted for the account of a federation of cooperative associations. He stated that such provision would allow the cooperative associations that are members of API to operate collectively within the Order 4 diversion limits, and would encourage more economic movements of milk from producers' farms to plants.

A representative for Inter-State testified in favor of increasing the limit on allowable diversions of producer milk to nonpool plants from 40 to 50 percent of a cooperative's member milk. The witness stated that the Allentown plant recently sold by API has been a customary outlet for Inter-State member milk in excess of the fluid needs of the market. He testified that during the months of September and October, 1983, Inter-State nearly failed to meet the 40-percent limit on diversion of producer milk to nonpool plants. Without the use of the Allentown facility as a pool outlet for milk in excess of the market's fluid needs, the witness indicated, Inter-State would have difficulty in qualifying all of its member milk for pooling under the present diversion allowances. The Inter-State witness stated that Eastern Milk Producers Cooperative Association, Inc., whose Order 4 milk is marketed predominantly by Inter-State, supported the cooperative's position. He testified that Inter-State took no position on whether a federation of cooperative associations should be able to divert the milk of members of its own cooperatives.

A representative of 29 Order 2 and Order 4 handlers (Ad Hoc Committee) testified that the group of handlers he represents has no objection to the proposed order amendments. He stated that the proposals of API and Inter-State do not change the Ad Hoc Committee's position taken at the earlier hearing, of which this proceeding is a re-opening, regarding the urgent need to regulate 23 additional Pennsylvania counties. The witness stated that any amendments to Order 4 adopted as a result of this portion of the proceeding also will be appropriate for Order 4 as it may be expanded as a result of the earlier hearing in this proceeding.

The proposed increase in diversion allowances for cooperative members should be adopted to accommodate the changed marketing conditions in the Middle Atlantic marketing area represented by the loss of pool status of a major outlet for the market's reserve supply of milk. Increased diversion limits will assure that producers long associated with the market will continue to have their milk priced and pooled under the order without uneconomic movements of milk on the part of the cooperative associations that handle the

market's reserve milk supplies. Such a change was proposed and supported by cooperatives representing a substantial number of the producers on the market, and was opposed by no one.

As noted previously, the proposal that would permit a federation of cooperatives to be a handler on diverted milk in the same manner as the order now provides with respect to an individual cooperative should be adopted. The current order provisions do not accord handler status to a cooperative federation that diverts milk in the same manner as an individual diverting cooperative. This is because the present provisions are written in a manner that requires the cooperative federation to compute allowable diversions on the basis of member producer milk associated at each pool plant operated by the federation. The diversion allowance applicable to a federation of cooperatives should be based on the combined member cooperatives' producer milk associated with pool plants. This will allow the members of the proponent to collectively meet the diversion allowance rather than having to meet this requirement on an individual plant basis. Such an arrangement will accommodate the change in the operation of the federation's Allentown facility and will facilitate the orderly and efficient disposition of its reserve milk supplies.

2. Pool Distributing Plant Definition

The pool distributing plant definition should be amended to provide that a plant which meets the pool plant requirements as a distributing plant during any month would continue to be pooled for the two immediately succeeding months as long as the handler continues to dispose of at least 15 percent of its receipts as route disposition within the marketing area. This pool plant "lock-in" under the order would be effective regardless of whether or not the plant meets the Class I disposition percentage of its total receipts of pool milk required under the order's pool plant definition during the two succeeding months. The order now requires that not less than 40 percent of a handler's receipts in each of the months of September through February, and 30 percent during March through August, be disposed of as Class I milk in order for the plant to be a pool distributing plant. In addition, 15 percent of the handler's receipts must be disposed of as route disposition in the marketing area during each month.

The amendment was proposed by Inter-State. The witness for Inter-State testified that the cooperative supplies significant volumes of milk to three Order 4 distributing plants whose Class II use has grown while their Class I use has remained constant or declined. In any given month, the witness stated, one or more of these plants may fail to qualify as an Order 4 pool plant because their Class I dispositions do not constitute a large enough percentage of the plant's receipts.[1] The Inter-State representative testified that as a result of the failure of any of these plants to maintain pool status, the milk of Inter-State members delivered to such a plant would cause it to exceed the limit on diversions to nonpool plants and thereby force some member milk to be depooled.

According to the Inter-State witness, increased diversion limits will not solve the problems presented by the uncertain pool status of these three plants. The witness testified that during September and October 1983, Inter-State nearly exceeded the order's diversion limits. At that time, he pointed out, the three plants involved, as well as the Allentown manufacturing facility, were all pool plants. If any one of those plants had failed to qualify for pooling, the Inter-State milk delivered to that plant would be a delivery to a nonpool plant and cause Inter-State producer milk to be over-diverted. As a result, some would have to be removed from the pool, and would not be priced under the order.

The witness stated that a major problem encountered by Inter-State in delivering milk to the three distributing plants in question is that a failure of any of the plants to meet pooling requirements is not known until after the end of the month in which delivery was made. Consequently, the Inter-State representative testified, the cooperative has found it necessary to make uneconomic deliveries of milk normally associated with the three plants to other Order 4 pool distributing plants to ensure that milk received at the plants in question would remain producer milk regardless of whether those plants meet pool plant requirements or not. The witness said that uneconomic movements of milk must be undertaken not only during the months in which one of the distributing plants fails to qualify for pooling, but during any month in which it is possible that one of the plants may not be a pool plant. For this reason, he said, the "lock-in" is needed for two successive months after the plant qualifies for pooling so that the cooperative has time to adjust its milk deliveries to cope with the plant's nonpool status. He described the proposed amendment as being necessary to avoid uneconomic movements of Inter-State member milk and to insure Order 4 pool status for producers long associated with the order.

In a post-hearing brief filed on behalf of Inter-State, it was pointed out that, in addition to the problems encountered by Inter-State in supplying milk to any of the plants in question, such a plant's fluctuation between pool and non-pool status could jeopardize the handler's milk supply because of the additional expenses incurred by the cooperative as a result of the plant's uncertain regulatory status. No other persons testifying at the hearing, or filing briefs, favored or opposed adoption of the amendment proposed by Inter-State.

The order should be amended so that Inter-State will not encounter difficuly in pooling member producer milk which it has delivered to a fluid processing plant in the belief that the plant will be pooled. In addition, uneconomic movements of milk should not be required in order that Inter-State can be assured that milk of its member producers will continue to be pooled and priced under the order when supplied to a fluid milk plant.

Provision should be made, however, that a "lock-in" of a pool distributing plant that fails to meet the order's percentage Class I disposition requirements does not prevent the plant from being an other order plant if it otherwise meets the pool plant definition of another federal order. No testimony was given regarding any need for producers to be pooled under the Middle Atlantic order if the plant to which their milk is delivered meets the pool requirements of another federal order. Therefore, it the plant qualifies for pool status under another order, but not under Order 4, the "lock-in" provision should not be effective.

In the Middle Atlantic order, as in most other federal milk orders, the operator of a supply or reserve processing plant which automatically has pool status for certain months on the basis of having met pooling standards during specific prior months may request that the plant have nonpool status during the months in which it automatically would qualify for pooling. However, in reply to questioning, the witness expressed the opinion that the needs of the cooperative in assuring that the milk of its members would remain eligible for pooling should override the

[1] Official notice is taken of the May 1984 listing of plants under Order No. 4 as published by the market administrator. This list indicates that one of the three plants (Green's Dairy, York, Pa.) referred to by the Inter-State witness was a partially regulated distributing plant in May 1984.

distributing plants' ability to choose nonpool status. He also indicated that the handlers involved probably would share the cooperative's interest in assuring the pool status of the milk they receive. The witness said that he believed Inter-State to be the sole supplier of milk to the three handlers. The interests of the distributing plant operator should be protected by providing such a handler the opportunity to avoid being pooled during those months in which the plant's operations do not meet the order's minimum pooling requirements. If, as the witness stated, the distributing plant has a strong interest in maintaining the pool status of its supply of cooperative member milk, the plant would not exercise such an option. The handler should, however, have such an option.

3. Need for Emergency Action

A recommended decision in this proceeding should not be omitted. Witnesses for both API and Inter-State requested emergency action on the proposed amendments on the basis that such action would be necessary to amend the order before September 1, when the order's diversion limits once again become effective. Also in September, the percentage of receipts at a pool distributing plant that is required to be disposed of as Class I milk increases from 30 to 40 percent.

It is important for both of these reasons that the recommended order amendments be effective by September 1, 1984. However, there seems to be no reason to omit the recommended decision step in the process of amending the order on the basis of this hearing record. Barring unforeseeable delays, there should be no difficulty in completing the amendment process before September 1 through the regular rule-making process. Further, although no testimony opposing the proposed amendments was received at the hearing, there may be interested persons in the Middle Atlantic market who wish to take exception to the revisions adopted herein. Such persons should have the opportunity to do so. The request to omit a recommended decision and proceed directly to the issuance of an emergency final decision, therefore, is denied

Rulings on Proposed Findings and Conclusions

Briefs and proposed findings and conclusions were filed on behalf of certain interested parties. These briefs, proposed findings and conclusions and the evidence in the record were considered in making the findings and conclusions set forth above. To the extent that the suggested findings and conclusions filed by interested parties are inconsistent with the findings and conclusions set forth herein, the requests to make such findings or reach such conclusions are denied for the reasons previously stated in this decision.

General Findings

The findings and determinations hereinafter set forth supplement those that were made when the Middle Atlantic order was first issued and when it was amended. The previous findings and determinations are hereby ratified and confirmed, except where they may conflict with those set forth herein.

(a) The tentative marketing agreement and the order, as hereby proposed to be amended, and all of the terms and conditions thereof, will tend to effectuate the declared policy of the Act;

(b) The parity prices of milk as determined pursuant to section 2 of the Act are not reasonable in view of the price of feeds, available supplies of feeds, and other economic conditions which affect market supply and demand for milk in the marketing area, and the minimum prices specified in the tentative marketing agreement and the order, as hereby proposed to be amended, are such prices as will reflect the aforesaid factors, insure a sufficient quantity of pure and wholesome milk, and be in the public interest; and

(c) The tentative marketing agreement and the order, as hereby proposed to be amended, will regulate the handling of milk in the same manner as, and will be applicable only to persons in the respective classes of industrial and commerical activity specified in, a marketing agreement upon which a hearing has been held.

List of Subjects in 7 CFR Part 1004

Milk marketing orders, Milk, Dairy products.

Recommended Marketing Agreement and Order Amending the Order

The recommended marketing agreement is not included in this decision because the regulatory provisions thereof would be the same as those contained in the order, as hereby proposed to be amended. The following order amending the order, as amended, regulating the handling of milk in the Middle Atlantic marketing area is recommended as the detailed and appropriate means by which the foregoing conclusions may be carried out.

PART 1004—MILK IN THE MIDDLE ATLANTIC MARKETING AREA

1. In § 1004.7, add new paragraphs (a)(3) and (4) to read as follows:

§ 1004.7 Pool plant.

* * * * *

(a) * * *

(3) A plant which meets the "pool plant" requirements of this paragraph during any month shall retain its pool status during the immediately succeeding two months as long as the plant continues to meet the 15-percent in-area Class I disposition requirement, unless written application is filed by the plant operator with the market administrator on or before the first day of any such month requesting that the plant be designated a nonpool plant for such month and each subsequent month during which it does not otherwise qualify pursuant to this paragraph.

(4) A plant's status as an other order plant pursuant to paragraph (f) of this section shall not be affected by the provisions of paragraph (a)(3) of this section.

2. In § 1004.9, revise paragraph (b) to read to follows:

§ 1004.9 Handler.

* * * * *

(b) Any cooperative association or federation of cooperative associations with respect to the milk of any producer which it causes to be diverted in accordance with the provisions of § 1004.12 for the account of such cooperative association or federation.

* * * * *

3. In § 1004.12, revise paragraph (d)(2)(i) to read as follows:

§ 1004.12 Producer.

* * * * *

(d) * * *

(2) * * *

(i) All of the diversions of milk of members of a cooperative association or a federation of cooperative associations to nonpool plants are for the account of such cooperative association or federation, and the amount of member milk so diverted does not exceed 50 percent of the volume of milk of all members of such cooperative association or federation delivered to or diverted from pool plants during the month.

* * * * *

(Secs. 1–19, 48 Stat. 31, as amended; 7 U.S.C. 601–674)

Signed at Washington, D.C., on: July 12, 1984.

William T. Manley,

Deputy Administrator, Marketing Program Operations.

[FR Doc. 84-18988 Filed 7-17-84; 8:45 am]

BILLING CODE 3410-02-M

DEPARTMENT OF JUSTICE

Immigration and Naturalization Service

8 CFR Part 239

Special Provisions Relating to Aircraft; Designation of Ports of Entry for Aliens Arriving by Civil Aircraft

AGENCY: Immigration and Naturalization Service, Justice.

ACTION: Proposed rule.

SUMMARY: This proposed rule would eliminate the current exemption of carrier liability for inspectional overtime of aircraft arriving on schedule where permission is granted to land at other than a designated international airport of entry between 5:00 p.m. and 8:00 a.m., and would place liability for payment of inspectional overtime on the benefiting user, not on the government. This change would bring the regulation more closely into conformity with 8 U.S.C. 1353(b) which provides that an air carrier is exempted from paying overtime charges if (1) the inspection is performed at a designated port of entry, and (2) the aircraft is operating on a regular schedule.

DATE: Comments must be received on or before August 17, 1984.

ADDRESS: Please submit written comments, in duplicate, to the Director of Policy Directives and Instructions, Immigration and Naturalization Service, Room 2011, 425 I Street, NW., Washington, D.C. 20536.

FOR FURTHER INFORMATION CONTACT: For General Information: Loretta J. Shogren, Director, Policy Directives and Instructions, Immigration and Naturalization Service, 425 I Street NW., Washington, D.C. 20536, Telephone: (202) 633-3048.

For Specific Information: Ellis B. Linder, Immigration Inspector, Immigration and Naturalization Service, 425 I Street NW., Washington, D.C. 20536, Telephone: (202) 633-2745.

SUPPLEMENTARY INFORMATION: Current Service policy exempts by regulation (8 CFR 239.2 and 8 CFR 100.4(c)(3)) carrier liability for inspectional overtime involving an aircraft of a scheduled airline arriving on schedule where permission is granted to land at other than a designated international airport of entry between 5:00 p.m. and 8:00 a.m. By including "landing rights" airports under "other places where permission to land has been given", aircraft arriving at these airports are considered by INS as arriving "at a designated port of entry" Consequently, all scheduled aircraft arriving within one hour before or within one hour after the scheduled arrival time at these airports are being exempted from overtime charges for inspection service performed during overtime hours by INS. The proposed revision would provide clearer definitions relating to "international" and "landing rights" airports. In addition, the proposed amendment would eliminate any arguable conflict between the Secretary of the Treasury's powers pursuant to 49 U.S.C. 1509(b) and the Attorney General's authority under 8 U.S.C. 1229, and would more appropriately place any financial liability for inspectional services on the benefiting user and not on the Government of the United States.

In accordance with 5 U.S.C. 605(b) the Commissioner of Immigration and Naturalization certifies that this rule, if promulgated, will not have a significant economic impact on a substantial number of small entities.

This order would not be a major rule within the meaning of Section 1(b) of E.O. 12291.

List of Subjects in 8 CFR Part 239

Air carriers, Aircraft, Airports, Aliens, Inspections, Landing requirements, Port of entry.

Accordingly, it is proposed to amend Chapter I of Title 8 of the Code of Federal Regulations as follows:

PART 239—SPECIAL PROVISIONS RELATING TO AIRCRAFT: DESIGNATION OF PORTS OF ENTRY FOR ALIENS ARRIVING BY CIVIL AIRCRAFT

1. § 239.1 would be revised as follows:

§ 239.1 Definitions.

(a) *Scheduled Airline.* This term means any individual, partnership, corporation, or association engaged in air transportation upon regular schedules to, over, or away from the United States, or from one place to another in the United States, and holding a Foreign Air Carrier permit or a Certificate of Public Convenience and Necessity issued pursuant to the Federal Aviation Act of 1958 (72 Stat. 731).

(b) *International Airport.* An international airport is one designated by the Commissioner for the entry of aliens with the prior approval of the Secretary of Commerce, Secretary of the Treasury and the Secretary of Health and Human Services.

(c) *Landing Rights Airport.* A landing rights airport is an airport, although not designated as international, at which permission to land has been granted to aircraft operated by scheduled airlines by the Commissioner of Customs.

2. § 239.2 would be amended by revising paragraph (a); existing paragraphs (b), (c), and (d) would be redesignated (c), (d), and (e), respectively; and a new paragraph (b) would be added as follows:

§ 239.2 Landing requirements.

(a) *Place or landing.* Aircraft carrying passengers or crew required to be inspected under the Act shall land at the international air ports of entry enumerated in Part 100 of this chapter unless permission to land elsewhere shall first be obtained from the Commissioner of Customs in the case of aircraft operated by scheduled airlines, and in all ofhter cases from the district director of Customs or other Customs officer having jurisdiction over the Customs port of entry nearest the intended place of landing. Notwithstanding the foregoing, aircraft carrying passengers or crew required to be inspected under the Act on flights originating in Cuba shall land only at Fort Lauderdale-Hollywood Airport, Fort Lauderdale, Florida, unless advance permission to land elsewhere has been obtained from the District Director of the Immigration and Naturalization Service at Miami, Florida.

(b) *Inspection at other than international airports.* Whenever permission is granted to land at other than an international airport designated in section 100.4(c)(3) of this chapter, the owner, operator, or person in charge of the aircraft shall pay any additional expenses incurred in inspecting passengers or crew on board such aircraft.

* * * * *

(Secs. 103 and 239 of the Immigration and Nationality Act, as amended, (8 U.S.C. 1103 and 1229))

Dated: June 25, 1984.

Alan C. Nelson,

Commissioner, Immigration and Naturalization Service.

[FR Doc. 84-18985 Filed 7-17-84; 8:45 am]

BILLING CODE 4410-10-M

DEPARTMENT OF TRANSPORTATION

Federal Aviation Administration

14 CFR Part 71

[Airspace Docket No. 84-AWP-8]

Proposed Establishment of Additional Control Area, NV

AGENCY: Federal Aviation Administration (FAA), DOT.

ACTION: Notice of proposed rulemaking.

SUMMARY: This notice proposes to establish an Additional Control Area north of VOR Federal Airway V-244 between Tonopah, NV, and Wilson Creek, NV, to enable aircraft under air traffic control to remain within controlled airspace while being routed around airspace routinely utilized for military exercises.

DATES: Comments must be received on or before September 4, 1984.

ADDRESSES: Send comments on the proposal in triplicate to: Director, FAA, Western-Pacific Region, Attention: Manager, Air Traffic Division, Docket No. 84-AWP-8, Federal Aviation Administration, P.O. Box 92007, Worldway Postal Center, Los Angeles, CA 90009.

The official docket may be examined in the Rules Docket, weekdays, except Federal holidays, between 8:30 a.m. and 5:00 p.m. The FAA Rules Docket is located in the Office of the Chief Counsel, Room 916, 800 Independence Avenue, SW., Washington, D.C.

An informal docket may also be examined during normal business hours at the office of the Regional Air Traffic Division.

FOR FURTHER INFORMATION CONTACT: William C. Davis, Airspace and Air Traffic Rules Branch (AAT-230), Airspace-Rules and Aeronautical Information Division, Air Traffic Service, Federal Aviation Administration, 800 Independence Avenue, SW., Washington, D.C. 20591; telephone: (202) 426-8783.

SUPPLEMENTARY INFORMATION:

Comments Invited

Interested parties are invited to participate in this proposed rulemaking by submitting such written data, views, or arguments as they may desire. Comments that provide the factual basis supporting the views and suggestions presented are particularly helpful in developing reasoned regulatory decisions on the proposal. Comments are specifically invited on the overall regulatory, economic, environmental, and energy aspects of the proposal. Communications should identify the airspace docket and be submitted in triplicate to the address listed above. Commenters wishing the FAA to acknowledge receipt of their comments on this notice must submit with those comments a self-addressed, stamped postcard on which the following statement is made: "Comments to Airspace Docket No. 84-AWP-8." The postcard will be date/time stamped and returned to the commenter. All communications received before the specified closing date for comments will be considered before taking action on the proposed rule. The proposal contained in this notice may be changed in the light of comments received. All comments submitted will be available for examination in the Rules Docket both before and after the closing date for comments. A report summarizing each substantive public contact with FAA personnel concerned with this rulemaking will be filed in the docket.

Availability of NPRM's

Any person may obtain a copy of this Notice of Proposed Rulemaking (NPRM) by submitting a request to the Federal Aviation Administration, Office of Public Affairs, Attention: Pubic Information Center, APA-430, 800 Independence Avenue SW., Washington, D.C. 20591, or by calling (202) 426-8058. Communications must identify the notice number of this NPRM. Persons interested in being placed on a mailing list for future NPRM's should also request a copy of Advisory Circular No. 11-2 which describes the application procedures.

The proposal

The FAA is considering an amendment to § 71.163 of Part 71 of the Federal Aviation Regulations (14 CFR Part 71) to establish an Additional Control Area between Tonopah, NV, and Wilson Creek, NV, from 11,500 feet MSL to 18,000 feet MSL. This airspace would be generally bounded on the south by VOR Federal Airway V-244 and would extend northward approximately 20 miles. By designating this airspace as an Additional Control Area air traffic can be routed along more fuel efficient routes around military exercises. Section 71.163 of Part 71 of the Federal Aviation Regulations was republished in Handbook 7400.6 dated January 3, 1984.

List of Subjects in 14 CFR Part 71

Additional control areas, Aviation safety.

The Proposed Amendment

Accordingly, pursuant to the authority delegated to me, the Federal Aviation Administration proposes to amend § 71.163 of Part 71 of the Federal Aviation Regulations (14 CFR Part 71) as follows:

Reveille, NV [NEW]

That airspace extending upward from 11,500 feet MSL to 18,000 feet MSL within the area bounded by a line beginning at lat. 38°14'00" N., long. 117°00'00" W., to lat. 38°26'00" N., long. 116°24'20" W.; to lat. 38°30'15" N., long. 114°24'45" W., to lat. 38°20'20" N., long. 114°09'15" W., to lat. 38°14'00" N., long. 114°09'15" W.; to lat. 38°13'3" N., long. 116°00'00" W., to lat. 38°09'55" N., long. 116°20'50" W.; to lat. 38°08'10" N., long. 116°34'45" W.; to lat. 38°16'50" N., long. 116°35'50" W.; to the point of beginning.

(Secs. 307(a) and 313(a), Federal Aviation Act of 1958 (49 U.S.C. 1348(a) and 1354(a)); (49 U.S.C. 106(g) (Revised, Pub. L. 97-449, January 12, 1983)); and 24 CFR 11.65)

The FAA has determined that this proposed regulation only involves an established body of technical regulations for which frequent and routine amendments are necessary to keep them operationally current. It, therefore—(1) is not a "major rule" under Executive Order 12291; (2) is not a "significant rule" under DOT Regulatory Policies and Procedures (44 FR 11034; February 26, 1979); and (3) does not warrant preparation of a regulatory evaluation as the anticipated impact is so minimal. Since this is a routine matter that will only affect air traffic procedures and air navigation, it is certified that this rule, when promulgated, will not have a significant economic impact on a substantial number of small entities under the criteria of the Regulatory Flexibility Act.

Issued in Washington, D.C., on July 11, 1984.

John W. Baier,

Acting Manager, Airspace-Rules and Aeronautical Information Division.

[FR Doc. 84-18312 Filed 7-18-84; 8:45 am]

BILLING CODE 4910-13-M

DEPARTMENT OF LABOR

Occupational Safety and Health Administration

29 CFR Part 1910

[Docket H-103S]

Educational/Scientific Diving

AGENCY: Occupational Safety and Health Administration (OSHA), Labor.

ACTION: Reopening of Record and Statement of Guidelines.

SUMMARY: Pursuant to Court Order, OSHA is reopening the record for the Final Rule concerning scientific diving which was published on November 26, 1982 (47 FR 53357). One purpose of this action is to accept affidavits from the United Brotherhood of Carpenters and Joiners (UBCJ) and from other interested parties, concerning the UBCJ's membership and the diving work that membership performs.

The second purpose of this notice is to indicate the guidelines that OSHA will use in determining whether the diving being performed is commercial or scientific. Affidavits or other comments will be accepted into the record on these guidelines from all interested parties.

DATE: Affidavits and comments must be received by August 17, 1984.

ADDRESS: Affidavits and comments should be submitted in quadruplicate to the Docket Officer, Docket H-103S, U.S. Department of Labor, Occupational Safety and Health Administration, Room S6216, 200 Constitution Avenue, NW., Washington, D.C. 20210. The telephone number is (202) 523-7894.

FOR FURTHER INFORMATION CONTACT: Mr. James F. Foster, U.S. Department of Labor, Occupational Safety and Health Administration, Room N3637, 200 Constitution Avenue, NW., Washington, D.C. 20210, (202) 523-8151.

SUPPLEMENTARY INFORMATION:

Background

On November 26, 1982, OSHA exempted scientific diving from coverage of 29 CFR Part 1910, Subpart T, Commercial Diving Operations, provided that the diving meets the Agency's definition of scientific diving *and* is under the direction and control of a diving program utilizing a safety manual and a diving control board meeting certain specified criteria (47 FR 53357).

Based on the rulemaking proceedings on scientific diving, OSHA believes that significant differences exist between scientific and commercial diving; that the scientific diving community has been successfully self-regulated for many years based on standards developed by the Scripps Institution of Oceanography; and that this successful self-regulation is evidenced by its exemplary safety record. Therefore, OSHA concluded in the Final Rule that an exemption for scientific diving would allow this community to perform significant underwater scientific activities while maintaining the safety and health of scientific divers.

Under section 6(f) of the Occupational Safety and Health Act of 1970, the United Brotherhood of Carpenters and Joiners (UBCJ) filed a petition for judicial review of the Final Rule with the United States Court of Appeals for the District of Columbia Circuit, challenging the Final Rule's exemption for scientific divers.

The Secretary opposed UBCJ's petition on both procedural and substantive grounds. The Secretary asserted, among other arguments, that because the UBCJ represents only commercial divers it lacks standing to challenge the Rule's exemption for scientific divers.

UBCJ's challenge to the Rule progressed to briefing and oral argument. On April 4, 1984, after oral argument, the Court of Appeals issued a memorandum and order on the question of the Union's standing to maintain its challenge. In the memorandum, the Court stated that it lacked "both factual and interpretive background necessary to evaluation of the standing issue." The Court ordered the Secretary to give UBCJ "full opportunity, through affidavits or testimony, to make clear the nature of its membership and the diving work that membership performs." The order provided that any evidence submitted by the Union would become a part of the record.

The Court also ordered the Secretary to "authoritatively state guidelines that would indicate how the 'scientific' and 'commercial' classifications will be applied to arguably ambiguous cases." The guidelines are also to become part of the record. The Secretary was instructed to submit the additional factual and interpretive material to the Court by September 4, 1984.

In compliance with the Court's order, OSHA by this notice is reopening the record to give UBCJ full opportunity to submit affidavits regarding its membership and the diving work they perform. To enable the Union to avail itself fully of this opportunity, OSHA is also in this notice explaining the interpretive guidelines that it will use in determining which enterprises may avail themselves of the exemption for scientific diving.

Because the Court's order entails an enlargement of the public rulemaking record, the Agency considers it appropriate to allow public comment on the specific aspects of the Rule addressed by this notice. Since UBCJ's representations concerning its membership and their activities must be by affidavit, other parties who wish to comment on this issue should also submit their comments in affidavit form. Comments on the Agency's guidelines for resolving close exemption determinations need not be by affidavit.

Guidelines

As the Court of Appeals observed, similar activities or tasks may be undertaken during either scientific or commercial dives. This fact impeded the Court's understanding of when a dive is subject to the exemption, and when it is covered by the requirements of Subpart T. In the Court's view, "[c]learly there is activity that could be easily classified; but there also seems to a 'gray area' that is not so easy to classify." By this notice, OSHA intends to clarify this gray area, and to enable the Court and public to distinguish readily between scientific and commercial diving.

OSHA believes that even seemingly close cases can be clearly resolved by examination of four factors, *all* of which must be present for a dive to be scientific, rather than commercial: (1) The unique organizational structure of the scientific diving community; (2) the restricted purposes for which scientific dives are undertaken; (3) the limited nature of the tasks performed by scientific divers; and (4) the special qualifications of the divers who participate in scientific dives. Each of these factors is discussed below. The examples used are for the purpose of illustrating the application of a single guideline.

1. Organizational Structure

First and foremost, OSHA believes that the organizational structure of the scientific diving community's consensual standard program is not only vital to the integrity of scientific diving programs, but effectively serves to segregate commercial diving and the scientific diving addressed in OSHA's Final Rule. The Diving Control Board required of scientific diving programs contains several elements that distinguish between commercial diving and the exempt scientific diving. These distinctive elements include peer review, absolute authority over diving operations, and the autonomy inherent in the Board's decision-making powers and responsibilities.

The issue of peer review was discussed thoroughly during the rulemaking and was supported by the majority of commenters. OSHA noted at 41 FR 53360:

> The majority of commenters (e.g., Ex. 5: 9; 28; 60; 102; 137; 162) as well as witnesses at the hearing (Tr. 33, 163, 321A, 531) favored this system of self-regulation because it is formulated, monitored, and enforced by the working divers.

A research specialist from the University of California, Santa Barbara, (Ex. 5: 22) stated:

> This peer review of dive operations has been very effective. The combined expertise of practicing scientific divers which has been accumulated and put into practice through this system has made it one of the best systems that I am aware of.

OSHA also believes this system of peer review has successfully regulated scientific diving programs and, therefore, OSHA mandated that the majority of members of the Diving Control Board be active divers. OSHA's intent with respect to this "peer review" was that the active divers required to make up the Board would be *scientists* who actively dive, since at issue was the control of a scientific diving program. Thus, OSHA will enforce the membership as it was intended in the Final Rule. The "majority of active divers" on the Diving Control Board must also be scientists.

In addition, in order to assure that the Diving Control Board has control of the diving program and absolute authority over diving, as comments indicated was the practice in the scientific diving community (e.g., Ex. 5: 22; 27; 35), OSHA required that the Board have the authority to approve and monitor diving projects; review and revise the diving safety manual; assure compliance with the manual; certify the depths to which a diver has been trained; take disciplinary action for unsafe practices; and assure adherence to the buddy system (in which a diver is accompanied by and is in continuous contact with another diver in the water) for SCUBA diving (47 FR 53363). OSHA's intent was that the Diving Control Board primarily consisting of the divers themselves would regulate the diving activities as described by the scientific diving community throughout the rulemaking (e.g., Ex. 5: 29A1; 49; 53). Therefore, when it is necessary to evaluate Diving Control Boards, OSHA will verify that such Boards have this autonomous and absolute authority over scientific diving operations.

OSHA realizes that some commercial diving companies may have an entity similar to a scientific Diving Control Board, such as a diving safety committee. However, OSHA does not believe that such committees have the autonomy and authority over diving operations which characterize a scientific diving program's Diving Control Board.

2. Restricted Purpose

The definition of scientific diving is "diving performed solely as a necessary part of a scientific, research, or educational activity" (47 FR 53365). Scientific diving places scientists directly into the environment they want to measure and observe. The National Oceanic and Atmospheric Administration (NOAA, Diving Manual) has noted that "marine research using diving as a tool has been important in understanding the ocean, its organisms, and its dynamic processes." Such diving includes the study of fish behavior, ecological surveys and benthic surveys (the aggregate of organisms living on or at the bottom of a body of water).

OSHA believes that scientific diving is an adjunct used in the advancement of underwater science, as was indicated during the rulemaking (e.g., Ex. 4: 2, Ex. 5: 19; 153, Tr. 49; 601; 602). For example, representatives from the scientific diving community noted that "Our objective is to promote the advancement of science and the use of underwater methods" (Tr. 177), and further noted their concern that coverage of the scientific diving community by Subpart T, Commercial Diving Operations, might cause "irreparable damage to the underwater scientific effort of the United States" (Ex. 5: 153). Clearly, the advancement of underwater science indicates that the observations, data collection, and other activities can only advance science if the results of such studies are available to the public. The advancement of science cannot occur unless such studies are made available to contribute to and enhance scientific knowledge. Therefore, OSHA's intent in promulgating the amendment was to restrict the exemption for scientific, research dives to those that result in non-proprietary information, data, knowledge, or other work product, and the Agency so construes the "purpose" element of the definition for scientific diving. For example, an environmental impact study which is public information, as described, would qualify for the exemption. However, surveys conducted by a utility for the purpose of expanding the physical facility would not qualify, because the purpose of the project is not science. Even a scientific project, such as an environmental study, the results of which were proprietary would not qualify for the exemption using this criterion.

Another example that illustrates the purpose criterion would be that of specimen and sample collection. Such tasks could seemingly fall into either the scientific or commercial classifications. However, the overall purpose of the project must be science; specimen or sample collection for commercial purposes would not qualify.

3. Tasks Performed

The scientific diving definition in the standard further states that the diving is done by employees whose sole purpose for diving is to perform scientific research tasks and also lists those tasks that are traditionally considered commercial, which emphasize construction and the use of construction tools. As OSHA discussed in the Final Rule (47 FR 53357), a commercial diver is typically an underwater construction worker, builder and trouble shooter; a scientific diver is an observer of natural phenomena or responses of natural systems, and a gatherer of data for scientific analysis. The tasks performed by the scientific diver are usually light and short in duration; if any handtools are used, they are simple ones. One commenter (Ex. 5: 122) noted:

> The common tools of the scientific diver include a small hammer (for chipping off a coral sample), collecting jars, special hand-held measuring devices, plastic core tubes and hand net, a suction fish collector, a camera, a slate/pencil, and so on. With very few isolated exceptions does a scientific diver encounter a situation which involves working with heavy equipment underwater, using power tools, handling explosives, or using welding or burning equipment. In order to be involved in such heavy work using specialized equipment (common in commercial diving) the diver would have to receive "approved" training and the procedure and personnel involved would have to be "approved" by the diving safety control board. In my opinion, as a diving safety coordinator, *I would specifiy contracting such tasks to qualified commercial divers.* (Emphasis added.) I feel that most university diving safety coordinators and diving safety control boards would do likewise.

An example of tasks distinctions might involve a scientific study of kelp. The construction of the kelp bed used in the project is not scientific diving since construction activities are traditionally commercial diving tasks. The consequent studies made of the kelp would be scientific diving tasks.

OSHA will carefully evaluate the tasks of claimed scientific diving in order to assure that traditionally commercial tasks are not part of a scientific diver's tasks.

4. Special Qualifications

As noted above, a scientific diver is an observer and data gatherer involved in studying the ocean, its organisms and its dynamic processes in order to promote underwater science. OSHA believes, based on the nature of these activities, that these divers must be able to use scientific expertise in studying the underwater environment. Consequently,

OHSA will expect these divers to be scientists of scientists in training. This interpretation is amply supported by descriptions in the rulemaking record of the personnel who participate in scientific dives (e.g., Ex. 4: 2, Ex. 5: 34; 72; 153, Exs. 20, 21, 25).

For example a project with the purpose of scientific study requires mapping segments of the ocean floor. The project might hire commercial divers to undertake certain mapping tasks. These commercial divers are neither scientists nor scientists in training as prescribed by this guideline and, therefore, would not be eligible for exemption. If, however, as a part of a scientific project, scientific expertise is needeed to effectively accomplish data gathering tasks associated with mapping (e.g., specialized geological knowledge), then such diving meets this particular criterion.

5. Conclusion

In conclusion, OSHA will scrutinize, in conjunction with the exemption criteria as specified in the Final Rule, seemingly close cases using the following interpretive guidelines, all of which must be met for diving to qualify as scientific.

1. The Diving Control Board consists of a majority of active scientific divers and has autonomous and absolute authority over the scientific diving program's operations.

2. The purpose of the project using scientific diving is the advancement of science; therefore, information and data resulting from the project are non-proprietary.

3. The tasks of a scientific diver are those of an observer and data gatherer. Construction and trouble-shooting tasks traditionally associated with commercial diving are not included within scientific diving.

4. Scientific divers, based on the nature of their activities, must use scientific expertise in studying the underwater environment and, therefore, are scientists or scientists in training.

Public Participation

UBCJ and other interested parties are invited to submit affidavits concerning the Union's membership and the diving work that membership performs.

Additionally, OSHA will accept affidavits or other comments concerning the interpretive guidelines in this notice.

These affidavits and comments must be received by August 17, 1984, and submitted in quadruplicate to the Docket Office, Docket H-103S, U.S. Department of Labor, Occupational Safety and Health Administration, Room S6212, 200 Constitution Avenue, NW., Washington, D.C. 20210.

The data, views and arguments will be available for public inspection and copying at the above address. All timely submissions will be made a part of the record.

This document was prepared under the direction of Patrick R. Tyson, Deputy Assistant Secretary for Occupational Safety and Health, U.S. Department of Labor, 200 Constitution Avenue, NW., Washington, D.C. 20210.

Lists of Subjects in 29 CFR Part 1910

Occupational safety and health, Safety.

Patrick R. Tyson,

Deputy Assistant Secretary.

[FR Doc. 84-18963 Filed 7-17-84; 8:45 am]

BILLING CODE 4510-26-M

ENVIRONMENTAL PROTECTION AGENCY

40 CFR Part 52

[OAR-FRL-2627-2]

Michigan; Approval and Promulgation of Implementation Plans

AGENCY: U.S. Environmental Protection Agency (EPA).

ACTION: Proposed Disapproval.

SUMMARY: EPA is proposing to disapprove a revision to the Michigan State Implementation Plan (SIP) for the General Motors Corporation (GMC) Central Foundry Division's Saginaw Malleable Iron Plant. The revision consists of an amended total suspended particulate (TSP) control program under State Consent Order No. 08-1983 for the Central Foundry Division oil quench units. Consent Order No. 08-1983 is a revision to the control program in a federally approved State Consent Order No. 06-1980. EPA's proposed disapproval of Consent Order No. 08-1983 is based on, among other things, (1) the Agency's policy which requires concurrent mass/opacity tests as part of a justification for approval of alternative opacity limits and (2) lack of an updated air quality demonstration that attainment of the National Ambient Air Quality Standards (NAAQS) for particulates will not be jepardized in Saginaw.

DATE: EPA must receive comments on or before August 17, 1984.

ADDRESS: Written comments should be sent to:

Gary Gulezian, Chief, Regulatory Analysis Section, Air and Radiation Branch (5AR-26), U.S. Environmental Protection Agency, Region V, 230 South Dearborn Street, Chicago, Illinois 60604.

Please submit an original and three copies if possible. You may inspect copies of the submittal and EPA's evaluation during normal business hours at:

U.S. Environmental Protection Agency, Air and Radiation Branch, Region V, 230 South Dearborn Street, Chicago, Illinois 60604

Michigan Department of Natural Resources, Air Quality Division, State Secondary Government Complex, General Office Building, 7150 Harris Drive, Lansing, Michigan 48821

FOR FURTHER INFORMATION CONTACT: Toni Lesser, Regulatory Analysis Section, Air and Radiation Branch (5AR-26), U.S. Environmental Protection Agency, Region V, 230 South Dearborn Street, Chicago, Illinois 60604, (312) 885-6037

SUPPLEMENTARY INFORMATION: On July 27, 1983, the State of Michigan submitted Consent Order No. 08-1983 for the GMC Central Foundry Division's Saginaw Malleable Iron Plant, as a revision to the Michigan SIP for TSP The foundry is located in Saginaw County.

Consent Order No. 08-1983 amends control strategy provisions of a previous State Consent Order and alteration thereto (APC No. 06-1980), submitted to EPA on November 18, 1982, and approved on August 15, 1983 (48 FR 36818). Specifically, Consent Order No. 08-1983 relaxes the requirements of the previous federally approved Consent Order No. 06-1980 as they apply to the six oil quench facilities at the plant.

The previously approved Consent Order and its alteration (APC No. 06-1980) contain the provisions applicable to the oil quench facilities (For a detailed review, see EPA's Technical Support Document (TSD) of March 7, 1983). The previous Consent Order (APC No. 6-1980) was designed to contribute emission reductions sufficient to deliver Saginaw County from nonattainment by July 1985. This federally approved order:

- Establishes a mass particulate limit of 0.10 pounds per 1,000 pounds exhaust gases for direct oil quench (DOQ) units 1, 2, and 3 with a final compliance date of January 1, 1982.
- Establishes an interim mass particulate limit of 0.16 pounds per 1000 pounds exhaust gases for harden quench draw (HQD) units 1, 2, and 3, applicable from January 1, 1982, to December 15, 1983, and a final particulate limit of 0.10 lb per 1000 lb to be achieved by December 15, 1983.

• Requires the company to submit to the State agency by May 1, 1982, a control plan and compliance schedule for limiting visible emissions from all oil quench units to comply with Michigan Rule 336.1301.

• Extends the final date of compliance with Michigan's Rule 336.1301 for opacity on all oil quench facilities from December 31, 1982, to December 15, 1983.

The current Consent Order No. 08–1983 submitted to EPA on July 27, 1983, provides changes to the previously approved Consent Order No. 06–1980 (For a detailed review, see EPA's TSD of December 22, 1983). The changes relate to emission limitations compliance schedules, and opacity limits, as well as the impact on these changes on air quality in Saginaw County. The compliance plan to meet the proposed changes depends on operating modifications that the company terms as "fume incineration." The modifications consist of (a) installing a curtain to shield castings from furnace heat, and (b) reducing air flow to induce negative pressure at the furnace entrance. The anticpated result of these modifications is that a portion of the fumes from the main hood will be directed to the draw furnace for incineration. The schedule for meeting the specified limits is after October 31, 1983, for the DOQ lines; and after December 15, 1983, for the HQD lines. As discussed below, EPA has reviewed these changes and believes that a modeling demonstration is required to determine whether these relaxations will jeopardize maintenance of the primary TSP air quality standard. In addition, EPA is concerned that these changes may jeopardize attainment of the TSP secondary standard in a timely manner. EPA's concerns of this requirement as well as other approvability concerns related to Consent Order No. 08–1983 are as follows:

1. Consent Order No. 08–1983 allows discontinued use of the electrostatic precipitators (ESPs) on No. 3 DOQ and provides an alternate opacity limit (20% opacity or less except for five 6-minute averages per hour of not more than 40% opacity) to accomodate the practice of batch quenching on DOQ facilities. The absence of the ESP represents a relaxation from the previously approved Consent Order No. 06–1980 because it caused an actual increase of emissions and opacity from No. 3 DOQ facility. In deed, the deletion of the ESP is a retreat from the projected emission reduction Consent Order No. 06–1980 was to provide towards attainment of the standards at Saginaw County.

In addition, Consent Order No. 8–1983 eliminates by December 15, 1983, the current SIP requirement of 20 percent opacity, provided for the six quenching lines by the previous consent order (06–1980) which is consistent with Michigan's rule 336.1301. As an alternative, Consent Order No. 08–1983 would extend the compliance date indefinitely into the future. This extension is likely to go beyond the attainment date of July 1, 1985, for the Saginaw area. The proposed interim opacities are merely limits to accommodiate current operating practices without the benefit of control devices such as precipitators. This proposal also represents a relaxation of the federally approved SIP (August 15, 1983, 48 FR 36818).

Under Agency policy (memorandum dated July 29, 1983, from S. Meyers to Regional AMD Directors), these relaxations would require a modeling demonstration using reference modeling techniques and best available data. No such demonstration has been provided by Michigan.

While the State did submit a demonstration of attainment (rollback technique) for the Saginaw area, it was dated May 1979, and the base data were from the years 1975 to 1978. Since emissions have changed since then, EPA requires a revised demonstration.

2. The Central Foundry Division proposes to control oil quenching emission through a concept called "Fume Incineration." This concept entails certain modifications to existing operation equipment to contain, capture, and incinerate fumes at their source. It evolved from the elimination of other control measure due to alleged operating difficulties and economic hardship. However, Consent Order No. 8–1983 does not contain any accompanying performance test results, alternative control system analyses, or emission control costs which are necessary to determine reasonable available control technology (RACT) for the foundry's quenching facilities. If the State of Michigan were to submit an adequate modeled attainment demonstration, no RACT determination would be required.

3. Consent Order No. 08–1983 establishes alternative opacity limits (other than the 20 percent opacity required under the current SIP) for the quenching facilities. USEPA cannot approve the alternative opacity limits as revisions to the SIP, unless the company (a) has demonstrated compliance with the particulate limit specified in the previous order (06–1980), and (b) has shown that the alternate visible emissions (VE) limits are based on VE readings taken concurrently with the mass compliance test. Agency policy is to require concurrent mass/opacity tests as part of a justification for approval of alternative opacity limits.

4. EPA notes that there were a minimum of 38 fire incidents in the quench facilities for the calendar year 1982. EPA is concerned that, during these incidents, the quench emissions exceeded both mass and opacity limits under the current SIP. EPA recommends that the plant keep an official record of fire incidents, and that the impact of these incidents on air quality be assessed in any modeled demonstration of attainment.

In light of EPA's concerns, which are discussed above and contained in the Agency's TSD of December 22, 1983, EPA is today proposing to disapprove the State Consent Order No. 8–1983 submitted by the State of Michigan for the GMC Central Foundry Division's Saginaw Malleable Iron Plant. EPA is providing a 30-day comment period on this notice of proposed rulemaking. Public comments received on or before (30 days from the date of publication) will be considered in the Agency's final rulemaking. When possible, comments should be submitted in triplicate. All comments, will be available for inspection during normal business hours at the Region V office listed at the beginning of this notice.

Under Executive Order 12292, today's action is not "Major". It has been submitted to the Office of Management and Budget for review.

Pursuant to the provisions of 5 U.S.C. § 605(b), I certify that this action will not have a significant economic impact on a substantial number of small entities because it affects only one source. In addition, this action imposes no additional requirements on the source.

List of Subjects in 40 CFR Part 52

Air pollution control, Ozone, Sulfur oxides, Nitrogen dioxide, Lead, Particulate matter, Carbon monoxide, Hydrocarbons, Intergovernment relations.

This notice is issued under authority of sections 110 and 172 of the Clean Air Act, as amended (42 U.S.C. 7410 and 7502).

Dated: December 30, 1983.

Valdas V. Adamkus,

Regional Administrator.

[FR Doc. 84-18901 Filed 7-17-84; 8:45 am]

BILLING CODE 6560-50-M

40 CFR Part 180

[PP 4E3034/P351; FRL-2629-2]

Methyl Parathion; Proposed Tolerance

AGENCY: Environmental Protection Agency (EPA).

ACTION: Proposed rule.

SUMMARY: This document proposes that a tolerance be established for residues of the insectivide methyl parathion in or on the raw agricultural crop group *Brassica* (cole) leafy vegetables. The proposed regulation to establish a maximum permissible level for residues of the insecticide in or on the crop group was requested in a petition submitted by the Interregional Research Project No. 4 (IR-4).

DATE: Comments, identified by the document control number [PP 4E3034/P351], must be received on or before August 17, 1984.

ADDRESS: Written comments by mail to: Information Services Section, Program Management and Support Division (TS-757C), Office of Pesticide Programs, Environmental Protection Agency, 401 M St., SW., Washington, D.C. 20460.

In person, bring comments to: Rm. 236, CM #2, 1921 Jefferson Davis Highway, Arlington, VA 22202.

Information submitted as a comment concerning this notice may be claimed confidential by marking any part or all of that information as "Confidential Business Information" (CBI). Information so marked will not be disclosed except in accordance with procedures set forth in 40 CFR Part 2. A copy of the comment that does not contain CBI must be submitted for inclusion in the public record. Information not marked confidential may be disclosed publicly by EPA without prior notice. All written comments will be available for public inspection in Rm. 236 at the address given above, from 8 a.m. to 4 p.m., Monday through Friday, except legal holidays.

FOR FURTHER INFORMATION CONTACT: By mail: Donald Stubbs, Emergency Response and Minor Use Section (TS-767C), Registration Division, Environmental Protection Agency, 401 M ST., SW., Washington, D.C. 20460. Office Location and telephone number: Rm. 716B, CM #2, 1921 Jefferson Davis Highway, Arlington, VA 22202, (703-557-1192).

SUPPLEMENTARY INFORMATION: The Interregional Research Project No. 4 (IR-4), New Jersey Agricultural Experiment Station, P.O. Box 231, Rutgers University, New Brunswick, NJ 08903, has submitted peticide petition 4E3034 to EPA on behalf of Dr. Robert H. Kupelian, National Director, IR-4 Project, and the Agricultural Experiment Station of Florida.

This petition requested that the Administrator, pursuant to section 408(e) of the Federal Food, Drug, and Cosmetic Act, propose the establishment of a tolerance for residues of the insecticide *O,O*-dimethyl-*O-p*-nitrophenyl thiophosphate (the methyl homolog of parathion) in or on the raw agricultural crop group *Brassica* (cole) leafy vegetables as defined in 40 CFR 180.34(f) at 1.0 part per million (ppm).

The data submitted in the petition and other relevant material have been evaluated. The pesticide is considered useful for the purpose for which the tolerance is sought. The toxicological data considered in support of the proposed tolerance include a 12-week dog feeding study with a cholinesterase (ChE) no-observed-effect level (NOEL) of 0.125 milligrams (mg)/kilogram (kg) of body weight (bw)/day (equivalent to 2 ppm); a 2-year rat feeding study with a NOEL of 1 ppm (equivalent to 0.05 mg/kg); a multigeneration rat reproduction/teratology study with a NOEL for reproductive effects at 10 ppm (equivalent to 0.5 mg/kg), and a NOEL for teratogenic effects at 6 mg/kg, highest dose tested; a rat teratogenic study administered intraperitoneally with no observed teratogenic effects at 15 mg/kg, the highest dose tested; a mouse teratogenic study administered intraperitoneally with a teratogernic NOEL at 60 ppm (equivalent to 9 mg/kg), highest dose tested, and a fetal toxic NOEL at 20 ppm (equivalent to 3 mg/kg); and a mouse mutagenicity study with no increase in chromosomal aberrations of bone marrow in male mice at a dose of 100 mg/kg.

In the Federal Register of May 25, 1979 (44 FR 30448), the National Cancer Institute (NCI) made available the report on a bioassay of methyl parathion for possible carcinogenicity. It was concluded that under the conditions of this bioassay, methyl parathion was not carcinogenic for the strain of F344 rats or B6C3F1 mice of either sex. The NCI has also completed a study on the possible carcinogenicity of parathion (43 FR 55467; November 28, 1978), and it was concluded that under the conditions of this bioassay, parathion was not carcinogenic to the strain of B6C3F1 mice. In the male and female strain of Osborne-Mendel rats receiving parathion in their diet, there was a higher incidence of adrenocortical tumors than in pooled or historical controls, suggesting that parathion is carcinogenic to this strain of rat. Since methyl parathion is not expected to bioconvert to parathion and carcinogenicity studies for methyl parathion were negative for carcinogenic effects, dietary exposure to methyl parathion-treated commodities is not expected to pose an oncogenic risk.

The acceptable daily intake (ADI), based on the 2-year rat feeding study (NOEL of 0.05 mg/kg/day) and using a 10-fold safety factor, is calculated to be 0.005 mg/kg bw/day. The maximum permitted intake (MPI) for a 60-kg human is calculated to be 0.3 mg/day. The theoretical maximum residue contribution (TMRC) from existing tolerances for a 1.5-kg daily diet is calculated to be 0.5756 mg/day; the current action will increase the TMRC by 0.00090 mg/day (0.16 percent) and will utilize 0.3 percent of the ADI.

Tolerances are currently established for residues of methyl parathion and parathion at 1 ppm in or on the following raw agricultural commodities in the crop group *Brassica* (cole) leafy vegetables: Broccoli, brussels sprouts, cabbage, caluliflower, collards, kale, kohlrabi, and mustard greens. With the establishment of the proposed crop group tolerance, tolerances for methyl parathion would also be established for Chinese broccoli, broccoli raab, Chinese cabbage, Chinese mustard cabbage, and rape greens at 1.0 ppm.

The nature of the residues is adequately understood and an adequate analytical method, gas chromatography using either electron capture or flame photometric detection, is available for enforcement purposes. No secondary residues in meat, milk, poultry, or eggs are expected since the proposed use does not involve significant livestock feed commodities. There are currently no actions pending against the continued registration of this chemical.

Based on the above information considered by the Agency, the tolerance established by amending 40 CFR 180..121 would protect the public health. It is proposed, therefore, that the tolerance be established as set forth below.

Any person who has registered or submitted an application for registration of a pesticide, under the Federal Insecticide, Fungicide, and Rodenticide Act (FIFRA) as amended, which contains any of the ingredients listed herein, may request within 30 days after publication of this notice in the Federal Register that this rulemaking proposal be referred to an Advisory Committee in accordance with sectiom 408(e) of the Federal Food, Drug, and Cosmetic Act.

Interested persons are invited to submit written comments on the

proposed regulation. Comments must bear a notation indicating the document control number, [PP 4E3034/P351]. All written comments filed in response to this petition will be available in the Information Services Section at address given above from 8 a.m. to 4 p.m., Monday through Friday except legal holidays.

The Office of Management and Budget has exempted this rule from the requirements of section 3 of Executive Order 12291.

Pursuant to the requirements of the Regulatory Flexibility Act (Pub. L. 96-354, 94 Stat. 1164, 5 U.S.C. 601-612), the Administrator has determined that regulations establishing new tolerances or raising tolerance levels or establishing exemptions from tolerance requirements do not have a significant economic impact on a substantial number of small entities. A certification statement to this effect was published in the Federal Register of May 4, 1981 (46 FR 24950).

List of Subjects in 40 CFR Part 180

Administrative practice and procedure, Agricultural commodities, Pesticides and pests.

(Sec. 408(e), 68 Stat. 514 (21 U.S.C. 346a(e)))

Dated July 2, 1984.

Robert V. Brown,

Acting Director, Registration Division, Office of Pesticide Programs.

PART 180—[AMENDED]

Therefore, it is proposed that 40 CFR 180.121(b) be amended by adding and alphabetically inserting the raw agricultural crop group *Brassica* (cole) leafy vegetables, to read as follows:

§ 180.121 Parathion or its methyl homolog; tolerances for residues.

* * * * *

(b) * * *

Commodities	Parts per million
* * * * *	
Vegetables, leafy, *Brassica* (cole)	1.0

[FR Doc. 84-18604 Filed 7-17-84; 8:45 am]

BILLING CODE 6560-50-M

40 CFR Part 180

[PP 4E2991/P350; FRL-2629-3]

O,O-Diethyl O-(2-Isopropyl-6-Methyl-4-Pyrimidinyl) Phosphorothioate; Proposed Tolerance

AGENCY: Environmental Protection Agency (EPA).

ACTION: Proposed rule.

SUMMARY: This document proposes that a tolerance be established for residues of the insecticide *O,O*-diethyl *O*-(2-isopropyl-6-methyl-4-pyrimidinyl) phosphorothioate in or on the raw agricultural crop group *Brassica* (cole) leafy vegetables. The proposed regulation to establish a maximum permissible level for residues of the insecticide in or on the crop group was requested in a petition submitted by the Interregional Research Project No. 4 (IR-4).

DATE: Comments, identified by the document control number [PP 4E2991/P350], must be received on or before August 17, 1984.

ADDRESS: Written comments by mail to: Information Services Section, Program Management and Support Division (TS-757C), Office of Pesticide Programs, Environmental Protection Agency, 401 M St., SW., Washington, D.C. 20460. In person, bring comments to: Rm. 236, CM #2, 1921 Jefferson Davis Highway, Arlington, VA 22202.

Information submitted as a comment concerning this notice may be claimed confidential by marking any part or all of that information as "Confidential Business Information" (CBI). Information so marked will not be disclosed except in accordance with procedures set forth in 40 CFR Part 2. A copy of the comment that does not contain CBI must be submitted for inclusion in the public record. Information not marked confidential may be disclosed publicly by EPA without prior notice. All written comments will be available for public inspection in Rm. 236 at the address given above, from 8 a.m. to 4 p.m., Monday through Friday, except legal holidays.

FOR FURTHER INFORMATION CONTACT: By mail: Donald Stubbs, Emergency Response and Minor Use Section (TS-767C), Registration Division, Environmental Protection Agency, 401 M St., SW., Washington, D.C.

Office location and telephone number: Rm. 716B CM #2, 1921 Jefferson Davis Highway, Arlington, VA 22202 (703-557-1192).

SUPPLEMENTARY INFORMATION: The Interregional Research Project No. 4 (IR-4), New Jersey Agricultural Experiment Station, P.O Box 231, Rutgers University, New Brunswick, NJ 08903, has submitted pesticide petition 4E2991 to EPA on behalf of Dr. Robert H. Kupelian, National Director, IR-4 Project, and the Agricultural Experiment Station of Florida.

This petition requested that the Administrator, pursuant to section 408(e) of the Federal Food, Drug, and Cosmetic Act, propose the establishment of a tolerance for residues of the insecticide *O,O*-diethyl *O*-(2-isopropyl-6-methyl-4-pyrimidinyl) phosphorothioate in or on the raw agricultural crop group *Brassica* (cole) leafy vegetables as defined in 40 CFR 180.34(f) at 0.7 part per million (ppm).

The data submitted in the petition and other relevant material have been evaluated. The pesticide is considered useful for the purpose for which the tolerance is sought. The toxicological data considered in support of the proposed tolerance include a National Cancer Institute (NCI) bioassay, based on 2-year oncogenicity studies in rats and mice, which was negative for oncogenicity at all levels tested (400 and 800 ppm in rats equivalent to 20 milligrams (mg)/kilogram (kg) and 40 mg/kg) and 100 and 200 ppm in mice (equivalent to 15 mg/kg and 30 mg/kg in mice); a multigeneration rat reproduction study with a no-observed-effect level (NOEL) of 8 ppm (equivalent to 0.4 mg/kg/day); a 106-week monkey feeding study with a cholinesterase (ChE) NOEL of 1.0 ppm (equivalent to 0.05 mg/kg); a 90-day rat feeding study with a plasma ChE NOEL of 0.5 ppm (equivalent to 0.025 mg/kg/day); a 90-day dog feeding study with a plasma ChE NOEL of 0.02 mg/kg/day; a 2-year dog feeding study with a ChE NOEL not demonstrated at the lowest dose tested (160 ppm, equivalent to mg/kg); a 2-year rat feeding study with a ChE NOEL not demonstrated at the lowest dose tested (10 ppm, equivalent to 0.5 mg/kg); a rabbit teratology study negative for teratogenic and fetotoxic effects at 100 mg/kg (highest dose tested) during days 6 to 18 of gestation; and a hen demyelination study which was negative at 200 ppm.

The acceptable daily intake (ADI), based on the 90-day dog feeding study (NOEL of 0.02 mg/kg/day) and using a 10-fold safety factor, is calculated to be 0.002 mg/kg of body weight (bw)/day. the maximum permitted intake (MPI) for a 60-kg human is calculated to be 0.12 mg/day. The theoretical maximum residue contribution (TMRC) from existing tolerances for a 1.5-kg daily diet is calculated to be 0.4218 mg/day; the current action will increase the TMRC by 0.00064 mg/day (0.15 percent). The current action will utilize an additional 0.53 percent of the ADI.

Tolerances are currently established for residues of the insecticide at 0.7 ppm in or on the following raw agricultural commodities in the crop group *Brassica*

(cole) leafy vegetables: Broccoli, brussels sprouts, cabbage, Chinese cabbage, cauliflower, collards, kale, and mustard greens. With the establishment of the proposed crop group tolerance, tolerances would also be established for residues of the insecticide in or on Chinese broccoli, broccoli raab, Chinese mustard cabbage, kohlrabi, and rape greens at 0.7 ppm.

The nature of the residues is adequately understood, and an adequate analytical method, gas chromatography, is available for enforcement purposes. No secondary residues in meat, milk, poultry, or eggs are expected since the proposed use does not involve significant livestock feed commodities. There are currently no actions pending against the continued registration of this chemical.

Based on the above information considered by the Agency, the tolerance established by amending 40 CFR 180.153 would protect the public health. It is proposed, therefore, that the tolerance be established as set forth below.

Any person who has registered or submitted an application for registration of a pesticide, under the Federal Insecticide, Fungicide, and Rodenticide Act (FIFRA) as amended, which contains any of the ingredients listed herein, may request within 30 days after publication of this notice in the Federal Register that this rulemaking proposal be referred to an Advisory Committee in accordance with section 408(e) of the Federal Food, Drug, and Cosmetic Act.

Interested persons are invited to submit written comments on the proposed regulation. Comments must bear a notation indicating the document control number, [PP 4E2991/P350]. All written comments filed in response to this petition will be available in the Information Serices Section at address given above from 8 a.m. to 4 p.m., Monday through Friday, except legal holidays.

The Office of Management and Budget has exempted this rule from the requirements of section 3 of Executive Order 12291.

Pursuant to the requirements of the Regualtory Flexibility Act (Pub. L. 96-534, 94 Stat. 1164, 5 U.S.C. 601-612), the Administrator has determined that regulations establishing new tolerances or raising tolerance levels or establishing exemptions from tolerance requirements do not have a significant economic impact on a substantial number of small entities. A certification statement to this effect was published in the Federal Register of May 4, 1981 (46 FR 24950).

(Sec. 408(e), 68 Stat. 514 (21 U.S.C. 346a(e)))

List of Subjects in 40 CFR Part 180

Administrative practice and procedure, Agricultural commodities, Pesticides and pests.

Dated: July 2, 1984.

Robert V. Brown,

Acting Director, Registration Division, Office of Pesticide Programs.

PART 180—[AMENDED]

Therefore, it is proposed that 40 CFR 180.153 be amended by deleting the commodities broccoli; brussels sprouts; cabbage; cabbage, Chinese; cauliflower; collards; kale; and mustard greens and by adding and alphabetically inserting the raw agricultural crop group *Brassica* (cole) leafy vegetables, to read as follows:

§ 180.153 O,O-Diethyl O-(2-isopropyl-6-methyl-4-pyrimidinyl) phosphorothioate; tolerances for residues.

* * * * *

Commodities	Parts per million
* * * *	*
Broccoli	0.7 [Delete].
Brussels sprouts	0.7 [Delete].
Cabbage	0.7 [Delete].
Cabbage, Chinese	0.7 [Delete].
* * *	
Cauliflower	0.7 [Delete].
* * *	*
Collards	0.7 [Delete].
* *	*
Kale	0.7 [Delete].
* * * *	*
Mustard greens	0.7 [Delete].
* * * *	
Vegetables, leafy, *Brassica* (cole)	0.7.
* *	

[FR Doc. 84-18606 Filed 7-17-84; 8:45 am]

BILLING CODE 6560-50-M

40 CFR Part 180

[PP 3E2914/P348; OPP-FRL-2630-5]

Permethrin; Proposed Tolerance

AGENCY: Environmental Protection Agency (EPA).

ACTION: Proposed rule.

SUMMARY: This document proposes that a tolerance be established for the combined residues of the insecticide permethrin and its metabolites in or on the raw agricultural commodity asparagus. The proposed regulation to establish a maximum permissible level for residues of the insecticide in or on the commodity was requested in a petition submitted by the Interregional Research Project No. 3 (IR-4).

DATE: Comments, identified by the document control number (PP 3E2914/P348), must be received on or before August 2, 1984.

ADDRESS: Written comments by mail to: Information Services Section, Program Management and Support Division (TS-757C), Office of Pesticide Programs, Environmental Protection Agency, 401 M St., SW., Washigtond, D.C. 20460.

In person, bring comments to: Rm 236, CM #2, 1921 Jefferson Davis Highway, Arlington, VA 22202.

Information submitted as a comment concerning this notice may be claimed confidential by marking any part or all of that information as "Confidential Business Information" (CBI). Information so marked will not be disclosed except in accordance with procedures set forth in 40 CFR Part 2. A copy of the comment that does not contain CBI must be submitted for inclusion in the public record. Information not marked confidential may be disclosed publicly by EPA without prior notice. All written comments will be available for public inspection in RM. 236 at the address given above, from 8 a.m. to 4 p.m., Monday through Friday, except legal holidays.

FOR FURTHER INFORMATION CONTACT: By mail: Donald Stubbs, Emergency Response and Minor Use Section (TS-767C), Registration Division, Environmental Protection Agency, 401 M St., SW., Washington, D.C. 20460. Office location and telephone number: Rm. 716B, CM #2, 1921 Jefferson Davis Highway, Arlington, VA 22202 (703-557-1192).

SUPPLEMENTARY INFORMATION: The Interregional Research Project No. 4 (IR-4), New Jersey Agricultural Experiment Station, P.O. Box 231, Rutgers University, New Brunswick, NJ 08903, has submitted pesticide petition 3E2914 to EPA on behalf of Dr. Robert H. Kupelian, National Director, IR-4 Project and the Agricultural Experiment Stations of Indiana, Massachusetts, Michigan, North Carolina, and Washington.

This petition requested that the Administrator, pursuant to section 408(e) of the Federal Food, Drug, and Cosmetic Act, propose the establishment of a tolerance for the combined residues of the insecticide permethrin [(3-phenoxyphenyl)methyl 3-(2,2-dichloroethenyl)-2,2-dimethylcyclopropane carboxylate] and its metabolites 3-(2,2-dichloroethenyl)-2,2-dimethylcyclopropane carboxylic acid (DCVA) and (3-phenoxyphenyl)methanol (3-PBA) calculated as the parent in or on the raw agricultural commodity asparagus at 2

parts per million (ppm). The petition was subsequently amended to propose a tolerance for asparagus at 1 ppm.

The data submitted in the petition and other relevant material have been evaluated. The pesticide is considered useful for the purpose for which the tolerance is sought. The toxicological data considered in support of the proposed tolerance were discussed in a final rule document (8F2099, 9F2196, 9F2243, 9F2192, 0F2425, 9F2307, 9F2207, 1F2562, 1F2564/R422) published in the Federal Register of October 13, 1982 (47 FR 45008). Tolerances for residues of the insecticide on various raw agricultural commodities have been previously established ranging from 0.05 to 60.0 ppm.

The acceptable daily intake (ADI), based on the 2-year rat feeding study (NOEL of 5.0 mg/kg/day) and using a 100-fold safety factor, is calculated to be 0.05 mg/kg of body weight (bw)/day. The maximum permitted intake (MPI) for a 60-kg human is calculated to be 3.0 mg/day. The theoretical maximum residue contribution (TMRC) from existing tolerances for a 1.5-kg daily diet is calculated to be 0.9930 mg/day; the current action will increase the TMRC by 0.00215 mg/day (0.22 percent). Permanent published tolerances utilize 33.1 percent of the ADI; the current action will utilize an additional 0.07 percent.

The nature of the residues is adequately understood and an adequate analytical method, gas-liquid chromatography with an electron capture detector, is available for enforcement purposes. No secondary residues in meat, milk, poultry or eggs are anticipated since asparagus is not considered a significant livestock feed commodity. There are presently no actions pending against the continued registration of this chemical.

Based on the above information considered by the Agency, the tolerance established by amending 40 CFR 180.378 would protect the public health. It is proposed, therefore, that the tolerance be established as set forth below.

Any person who has registered or submitted an application for registration of a pesticide, under the Federal Insecticide, Fungicide, and Rodenticide Act (FIFRA) as amended, which contains any of the ingredients listed herein, may request within 15 days after publication of this notice in the Federal Register that this rulemaking proposal be referred to an Advisory Committee in accordance with section 408(e) of the Federal Food, Drug, and Cosmetic Act.

Interested persons are invited to submit written comments on the proposed regulation. As provided for in the Administrative Procedure Act [5 U.S.C. 553(d)(3)], the comment period time is shortened to less than 30 days because of the necessity to expeditiously provide a means for control of insects infesting asparagus. Comments must bear a notation indicating the document control number, [PP 3E2914/P348]. All written comments filed in response to this petition will be available in the Information Services Section at the address given above from 8 a.m. to 4 p.m., Monday through Friday, except legal holidays.

The Office of Management and Budget has exempted this rule from the requirements of section 3 of Executive Order 12291.

Pursuant to the requirements of the Regulatory Flexibility Act (Pub. L. 96-534, 94 Stat. 1164, 5 U.S.C. 601-612), the Administrator has determined that regulations establishing new tolerances or raising tolerance levels or establishing exemptions from tolerance requirements do not have a significant economic impact on a substantial number of small entities. A certification statement to this effect was published in the Federal Register of May 4, 1981 (46 FR 24950).

(Sec. 408(e), 68 Stat. 514 (21 U.S.C. 346a(e)))

List of Subjects in 40 CFR Part 180

Administrative practice and procedure, Agricultural commodities, Pesticides and pests.

Dated: July 5, 1984.

Robert V. Brown,

Acting Director, Registration Division, Office of Pesticide Programs.

PART 180—[AMENDED]

Therefore, it is proposed that 40 CFR 180.378(b) be amended by adding and alphabetically inserting the raw agricultural commodity asparagus to read as follows:

§ 180.378 Permethrin; tolerances for residues.

* * * * *

(b) * * *

Commodities	Parts per million
* * * * *	
Asparagus	1.0
* * * * *	

[FR Doc. 84-18665 Filed 7-17-84; 8:45 am]

BILLING CODE 6560-50-M

40 CFR Part 180

[OPP-300092; FRL-2629-4]

Methylnaphthalene Sulfonic Acid-Formaldehyde Condensate, Sodium Salt; Proposed Exemption From the Requirement of a Tolerance

AGENCY: Environmental Protection Agency (EPA).

ACTION: Proposed rule.

SUMMARY: This document proposes that methylnaphthalene sulfonic acid-formaldehyde condensate, sodium salt be exempted from the requirement of a tolerance when used as a dispersant in pesticide formulations. This proposed regulation was requested by Diamond Shamrock Chemical Co.

DATE: Written comments must be received on or before August 17, 1984.

ADDRESS: By mail submit, written comments identified by the document control number [OPP-300092] to: Information Services Section (TS-757C), Program Management and Support Division, Office of Pesticide Programs, Environmental Protection Agency, 401 M St., SW., Washington, D.C. 20460.

In person, bring comments to: Information Services Section (TS-757C), Rm. 236, CM#2, Environmental Protection Agency, 1921 Jefferson Davis Highway, Arlington, VA 22202.

Information submitted in any comment concerning this notice may be claimed confidential by marking any part or all of that information as "Confidential Business Information" (CBI). Information so marked will not be disclosed except in accordance with procedures set forth in 40 CFR Part 2. A copy of the comment that does not contain CBI must be sumbitted for inclusion in the public record. Information not marked confidential may be disclosed publicly by EPA without prior notice to the submitter. All written comments will be available for public inspection in Rm. 236 at the address given above, from 8 a.m., to 4 p.m., Monday through Friday, excluding legal holidays.

FOR FURTHER INFORMATION CONTACT: By mail: N. Bhushan Mandava, Registration Support and Emergency Response Branch (TS-767C), Environmental Protection Agency, 401 M St., SW., Washington, D.C. 20460.

Office location and telephone number: Registration Support and Emergency Response Branch (TS-767C), Rm. 716, CM #2, 1921 Jefferson Davis Highway, Arlington, VA 22202 (703-557-7700).

SUPPLEMENTARY INFORMATION: At the request of Diamond Shamrock Chemical

Corp., the Administrator proposes to amend 40 CFR 180.1001(d) by establishing an exemption from the requirement of a tolerance for methylnaphthalene sulfonic acid-formaldehyde condensate, sodium salt as a dispersant in pesticide formulations applied to growing crops only.

Inert ingredients are all ingredients which are not active ingredients as defined in 40 CFR 162.3(c), and include, but are not limited to, the following types of ingredients (except when they have a pesticidal efficacy of their own): Solvents such as water; baits such as sugar, starches, and meat scraps; dust carriers such as talc and clay; fillers; wetting and spreading agents; propellants in aerosol dispensers; and emulsifiers. The term "inert" is not intended to imply nontoxicity; the ingredient may or may not be chemically active.

Preambles to proposed rulemaking documents of this nature include the common or chemical name of the substance under consideration, the name and address of the firm making the request for the exemption, and toxicological and other scientific bases used in arriving at a conclusion of safety in support of the exemption.

Name of Inert Ingredient

Methylnaphthalene sulfonic acid-formaldehyde condensate, sodium salt.

Name and Address of Requestor

Diamond Shamrock Chemical Corp., Morristown, NJ 07960.

Bases of Approval

Methylnaphthalene sulfonic acid-formaldehyde condensate, sodium salt is cleared as an indirect food additive under 21 CFR 176.170, paper products in contact with aqueous and fatty foods, and under 21 CFR 176.180, paper products in contact with dry foods. The unploymerized moiety, sodium mono- and dimethylnaphthalene sulfonate, is cleared under 40 CFR 180.1001(c), application to growing crops and to crops after harvest.

Based on the above information, and review of its use, it has been found that, when used in accordance with good agricultural practices, this ingredient is useful and does not pose a hazard to humans or the environment. It is concluded, therefore, that the proposed amendment to 40 CFR Part 180 will protect the public health, and it is proposed that the regulation be established as set forth below.

Any person who has registered or submitted an application for registration of a pesticide, under the Federal Insecticide, Fungicide, and Rodenticide Act (FIFRA) as amended, which contains this inert ingredient, may request within 30 days after publication of this notice in the Federal Register that this rulemaking proposal be referred to an Advisory Committee in accordance with section 408(e) of the Federal Food, Drug, and Cosmetic Act.

Interested persons are invited to submit written comments on the proposed regulation. Comments must bear a notiation indicating both the subject and the petition and document control number, "[OPP-300092]." All written comments filed in response to this notice of proposed rulemaking will be available for public inspection in the Registration Support and and Emergency Response Branch at the address given above from 8 a.m. to 4 p.m., Monday through Friday, except legal holidays.

The Office of Management and Budget has exempted this rule from the requirements of section 3 of Executive Order 12291.

Pursuant to the requirements of the Regulatory Flexibility Act (Pub. L. 96-534, 94 Stat. 1164, 5 U.S.C. 601-612), the Administrator has determined that regulations establishing new tolerances or raising tolerance levels or establishing exemptions from tolerance requirements do not have a significant economic impact on a substantial number of small entities. A certification statement to this effect was published in the Federal Register of May 4, 1981 (21 U.S.C. 346(e))).

List of Subjects in 40 CFR Part 180

Administrative practice and procedure, Agricultural commodities, Pesticides and pests.

Dated: July 2, 1984.

Robert V. Brown,

Acting Director, Registration Division, Office of Pesticide Programs.

PART 180—[AMENDED]

Therefore, it is proposed that 40 CFR 180.1001(d) be amended by adding and alphabetically inserting the inert ingredient as follows:

§ 180.1001 Exemptions from the requirement of a tolerance.

* * * * *

(d) * * *

Insert ingredients	Limits	Uses
* * *	* *	* *
Methylnaphthalene sulfonic acid-formaldehyde condensate, sodium salt.	.....	Dispersant.
* * *	* *	* *

* * * * *

(Sec. 408(e), 68 Stat. 514 (21 U.S.C. 346a(c))).

[FR Doc. 84-18605 Filed 7-17-84; 8:45 am]

BILLING CODE 6560-50-M

40 CFR Part 180

[OPP-300094; PH-FRL 2632-1]

Sodium Metabisulfite; Proposed Exemption From the Requirement of a Tolerance

AGENCY: Environmental Protection Agency (EPA).

ACTION: Proposed rule.

SUMMARY: This notice proposes that sodium metabisulfite (also called sodium pyrosulfite) be exempted from the requirement of a tolerance when used as a stabilizing agent in pesticide formulations for use on growing crops. This proposed regulation was requested by Mobay Chemical Corp.

DATE: Written comments must be received on or before August 17, 1984.

ADDRESS: By mail, submit comments identified by the document control number (OPP-30094) to:

Information Services Section (TS-757C), Program Management and Support Division, Office of Pesticide Programs, Environmental Protection Agency, 401 M St., SW., Washington, D.C. 20460

In person, bring comments to:

Registration Support and Emergency Response Branch, Registration Division (TS-767), Environmental Protection Agency, Rm. 724A, CM #2, 1921 Jefferson Davis Highway, Arlington, VA 22202

Information submitted as a comment concerning this notice may be claimed confidential by marking any part or all of that information as "Confidential Business Information" (CBI). Information so marked will not be disclosed except in accordance with procedures set forth in 40 CFR Part 2. A copy of the comment that does not contain CBI must be submitted for inclusion in the public record. Information not marked confidential may be disclosed publicly by EPA without prior notice to the submitter. All written comments will be available for

public inspection in Rm. 236 at the address given above, from 8 a.m. to 4 p.m., Monday through Friday, excluding legal holidays.

FOR FURTHER INFORMATION CONTACT: By mail:

N. Bhushan Mandava, Registration Support and Emergency Response Branch (TS-767C), Environmental Protection Agency, 401 M St., SW., Washington, D.C. 20460

Office location and telephone number: Registration Support and Emergency Response Branch, Rm. 716, CM #2, 1921 Jefferson Davis Highway, Arlington, VA 22202, (703-557-7700)

SUPPLEMENTARY INFORMATION: At the request of Mobay Chemical Corp., the Administrator proposes to amend 40 CFR 180.1001(d) by establishing an exemption from the requirement of a tolerance for sodium metabisulfite (sodium pyrosulfite) as a stabilizer in pesticide formulations applied to growing crops only.

Inert ingredients are all ingredients which are not active ingredients as defined in 40 CFR 162.3(c), and include, but are not limited to, the following types of ingredients (except when they have a pesticidal efficacy of their own): solvents such as water; baits such as sugar, starches, and meat scraps; dust carriers such as talc and clay; fillers; wetting and spreading agents; propellants in aerosol dispensers; and emulsifiers. The term "inert" is not intended to imply nontoxicity; the ingredient may or may not be chemically active.

Preambles to proposed rulemaking documents of this nature include the common or chemical name of the substance under consideration, the name and address of the firm making the request for the exemption, and toxicological and other scientific bases used in arriving at a conclusion of safety in support of the exemption.

Name of inert ingredient: Sodium metabisulfite (sodium pyrosulfite).

Name and address of requestor: Mobay Chemical Corp., Kansas City, MO 64120.

Bases for approval: Sodium metabisulfite is GRAS under 21 CFR 182.3766 for direct food use as a preservative. The related products sodium bisulfite and sodium sulfite are also listed under 21 CFR 182.3739 and 21 CFR 182-3798, respectively, as GRAS food substances. Sodium sulfite is cleared under 40 CFR 180.1001(c).

Based on the above information and review of its use, it hass been found that, when used in accordance with good agricultural practices, this ingredient is useful and does not pose a hazard to humans or the environment. It is concluded, therefore, that the proposed amendment to 40 CFR Part 180 will protect the public health, and it is proposed that the regulation be established as set forth below.

Any person who has registered or submitted an application for registration of a pesticide under the Federal Insecticide, Fungicide, and Rodenticide Act (FIFRA) as amended, which contains this inert ingredient, may request within 30 days after publication of this notice in the Federal Register that this rulemaking proposal be referred to an Advisory Committee in accordance with section 408(e) of the Federal Food, Drug, and Cosmetic Act.

Interested persons are invited to submit written comments on the proposed regulation. Comments must bear a notation indicating both the subject and the petition and document control number, "(OPP-300094)." All written comments filed in response to this notice of proposed rulemaking will be available for public inspection in the Registration Support and Emergency Response Branch at the address given above from 8 a.m. to 4 p.m., Monday through Friday, except legal holidays.

The Office of Management and Budget has exempted this rule from the requirements of section 3 of Executive Order 12291.

Pursuant to the requirements of the Regulatory Flexibility Act (Pub. L. 96-534, 94 Stat. 1164 (5 U.S.C. 601-612)), the Administrator has determined that regulations establishing new tolerances or raising tolerance levels or establishing exemptions from tolerance requirements do not have a significant economic impact on a substantial number of small entities. A certification statement to this effect was published in the Federal Register of May 4, 1981 (46 FR 24950).

(Sec. 408(e), 68 Stat. 514 (21 U.S.C. 346a(e)))

List of Subjects in 40 CFR Part 180

Administrative practice and procedure, Agricultural Commodities, Pesticides and pests.

Dated: July 6, 1984.

Robert V. Brown,

Acting Director, Registration Division, Office of Pesticide Programs.

PART 180—[AMENDED]

Therefore, it is proposed that 40 CFR 180.1001(d) be amended by adding and alphabetically inserting the inert ingredient as follows:

§ 180.1001 Exemptions from the requirements of a tolerance.

* * * * *

(d) * * *

Inert ingredients	Limits	Uses
* * * * *		
Sodium metabisulfite (CAS Registry No. 7681-57-4).	.....	Stabilizer.

* * * * *

[FR Doc. 84-18825 Filed 7-17-84; 8:45 am]

BILLING CODE 6560-50-M

Notices

Federal Register
Vol. 49, No. 139
Wednesday, July 18, 1984

This section of the FEDERAL REGISTER contains documents other than rules or proposed rules that are applicable to the public. Notices of hearings and investigations, committee meetings; agency decisions and rulings, delegations of authority, filing of petitions and applications and agency statements of organization and functions are examples of documents appearing in this section.

DEPARTMENT OF AGRICULTURE

Forms Under Review by Office of Management and Budget

July 13, 1984.

The Department of Agriculture has submitted to OMB for review the following proposals for the collection of information under the provisions of the Paperwork Reduction Act (44 U.S.C. chapter 35) since the last list was published. This list is grouped into new proposals, revisions, extensions, or reinstatements. Each entry contains the following information:

(1) Agency proposing the information collection; (2) Title of the information collection; (3) Form number(s), if applicable; (4) How often the information is requested; (5) Who will be required or asked to report; (6) An estimate of the number of responses; (7) An estimate of the total number of hours needed to provide the information; (8) An indication of whether section 3504(h) of Pub. L. 96-511 applies; (9) Name and telephone number of the agency contact person.

Questions about the items in the listing should be directed to the agency person named at the end of each entry. Copies of the proposed forms and supporting documents may be obatined from: Department Clearance Officer, USDA, OIRM, Room 404-W Admin. Bldg., Washington, DC 20250, (202) 447-2118.

Comments on any of the items listed should be submitted directly to: Office of Information and Regulatory Affairs, Office of Management and Budget, Washington, DC 20503, ATTN: Desk Officer for USDA.

If you anticipate commenting on a submission but find that preparation time will prevent you from doing so promptly, you should advise the OMB Desk Officer of your intent as early as possible.

Revised

• Statistical Reporting Service
Farm-Raised Catfish Surveys
Monthly, Quarterly
Farms, Small Businesses: 740 responses; 185 hours; not applicable under 3504(h)
Lee Sandberg, (202) 447-6820

• Animal and Plant Health Inspection Service
7 CFR 319, 321, 352—Foreign Quarantine Notices
PPQ 368, 533, 546, 587
On Occasion
Individuals or Housholds, State or Local Governments, Farms, Businesses or Other for-Profit, Non-profit Institutions, Small Businesses or Organizations: 164,545 responses; 32,919 hours; not applicable under 3504(h)
L.M. Sedgwick, Jr., (301) 436-8584

Extension

• Soil Conservation Service
Agriculture and Urban Damage Surveys
ECN 1, ECN 2, ECN 3, ECN 4, ECN 5, ECN 6
On Occasion
Individuals or Households; State or Local Government, Farms, Businesses or Other for-Profit, Small Businesses or Organizations: 2,600 responses; 5,800 hours; not applicable under 3504(h)
Roy M. Gray, (202) 447-2307

• Agricultural Stabilization and Conservation Service
MQ-71—Summary of Buyers Correction Accounts
MQ-71
On Occasion
Small Businesses or Organizations: 6,800 responses; 3,400 hours; not applicable under 3504(h)
Jay Poole, (202) 447-2715

Donald E. Hulcher,
Acting Department Clearance Officer.

[FR Doc. 84-18938 Filed 7-17-84; 8:45 am]
BILLING CODE 3410-01-M

Forest Service

Uinta National Forest Grazing Advisory Board; Meeting

The Uinta National Forest Grazing Advisory Board will meet at 9:00 a.m. on Thursday, August 16, 1984, at the Currant Creek Guard Station.

The purpose of this meeting is to have a field review of the current allotment management plans and the planning and utilization of the Range Betterment Fund.

The meeting will be open to the public. Those who wish to participate will need to supply their own saddle horse and equipment. Persons who wish to attend should notify Ward F. Savage, Uinta National Forest Supervisor's Office, P.O. Box 1428, Provo, UT 84601, telephone (801) 377-5780. Written statements may be filed with the Board before and after the meeting.

Dated: July 10, 1984.

Don T. Nebeker,
Forest Supervisor.

[FR Doc. 84-18973 Filed 7-17-84; 8:45 am]
BILLING CODE 3410-11-M

DEPARTMENT OF COMMERCE

Foreign-Trade Zones Board

[Docket No. 34-84]

Proposed Foreign-Trade Zone; Cowlitz County, WA; Application and Public Hearing

An application has been submitted to the Foreign-Trade Zones Board (the Board) by the Cowlitz Economic Development Council, a State of Washington non-profit corporation, requesting authority to establish a general-purpose foreign-trade zone in the communities of Kalama and Longview, Washington, within the Longview Customs port of entry on the Columbia River some 40 miles northwest of Portland/Vancouver. The application was submitted pursuant to the provisions of the Foreign-Trade Zones Act, as amended (19 U.S.C. 81a-81u), and the regulations of the Board (15 CFR Part 400). It was formally filed on July 10, 1984. The applicant is authorized to make this proposal under Section 24.46 of the Revised Code of Washington.

The proposed foreign-trade zone will cover over 260 acres at two sites in Kalama and Longview. Site 1 involves 3 parcels totalling 222 acres within the Port of Kalama. An existing building at 110 W. Marine Drive is available for initial zone warehousing activity. The other parcels are industrial sites on the deepwater channel. Site 2 is within the

170-acre Columbia Industrial Park, Longview.

The application contains evidence of the need for zone services in the Cowlitz County area. A number of firms have expressed an interest in using the zone for warehousing, manipulation or assembly of products, such as logging equipment, forklift trucks, chemicals, aluminum condensors, electronics, furniture, apparel, footwear, fishing equipment, toys and food products. Specific approvals for manufacturing are not being sought at this time. Such requests would be made to the Board on a case-by-case basis.

In accordance with the Board's regulations, an examiners committee has been appointed to investigate the application and report to the Board. The committee consists of: John J. Da Ponte, Jr. (Chairman), Director, Foreign-Trade Zones Staff, U.S. Department of Commerce, Washington, D.C. 20230; Clyde Kellay, District Director, U.S. Customs Service, Pacific Region, Federal Building, Room 198, 511 NW. Broadway, Portland, OR 97209; and Colonel Robert L. Friedenwald, District Engineer, U.S. Army Engineer District Portland, P.O. Box 2946, Portland, OR 97208.

As part of its investigation, the examiners committee will hold a public hearing on August 15, 1984, beginning at 9:00 a.m., in the City Council Chambers, City Hall, 1575 Broadway, Longview, Washington.

Interested parties are invited to present their views at the hearing. Persons wishing to testify should notify the Board's Executive Secretary in writing at the address below or by phone (202/377-2862) by August 9. Instead of an oral presentation, written statements may be submitted in accordance with the Board's regulations to the examiners committee, care of the Executive Secretary, at any time from the date of this notice through September 16, 1984.

A copy of the application and accompanying exhibits will be available during this time for public inspection at each of the following locations:

Area Director's Office, U.S. Customs Service, 800 12th St., Room 216, P.O. Box 996, Longview, WA 98632

Office of the Executive Secretary, Foreign-Trade Zones Board, U.S. Department of Commerce, Room 1872, 14th and Pennsylvania, NW., Washington, D.C. 20230

Dated: July 11, 1984.

John J. Da Ponte, Jr.,
Executive Secretary.

[FR Doc. 84-18925 Filed 7-17-84; 8:45 am]
BILLING CODE 3510-DS-M

International Trade Administration

New York University Medical Center; Decision on Application for Duty-Free Entry of Scientific Instrument

This decision is made pursuant to section 6(c) of the Educational, Scientific, and Cultural Materials Importation Act of 1966 (Pub. L. 89-651, 80 Stat. 897; 15 CFR Part 301). Related records can be viewed between 8:30 AM and 5:00 PM in Room 1523, U.S. Department of Commerce, 14th and Constitution Avenue, NW., Washington, D.C.

Docket No. 84-2. Applicant: New York University Medical Center, New York, NY 10016. Instrument: Accessories for Freeze-etch Apparatus. Manufacturer: Balzers Union, Liechtenstein. Intended Use: See notice at 48 FR 56421.

Comments: None received.

Decision: Approved. No instrument of equivalent scientific value to the foreign instrument, for such purposes as it is intended to be used, is being manufactured in the United States.

Reasons: These are compatible accessories for an instrument previously imported for the use of the applicant. The instrument and accessories were made by the same manufacturer. The National Bureau of Standards advises in its memorandum dated February 9, 1984 that the accessories are pertinent to the intended uses and that it knows of no comparable domestic accessories.

We know of no domestic accessory which can be readily adapted to the instrument.

(Catalog of Federal Domestic Assistance Program No. 11.105, Importation of Duty-Free Educational and Scientific Materials)

Frank W. Creel,
Acting Director, Statutory Import Programs Staff.

[FR Doc. 84-18927 Filed 7-17-84; 8:45 am]
BILLING CODE 3510-DS-M

University of California, San Diego; Decision on Application for Duty-Free Entry of Scientific Instrument

This decision is made pursuant to section 6(c) of the Educational, Scientific, and Cultural Materials Importation Act of 1966 (Pub. L. 89-651, 80 Stat. 897; 15 CFR 301). Related records can be viewed between 8:30 AM and 5:00 PM in Room 1523, U.S. Department of Commerce, 14th and Constitution Avenue, NW., Washington, D.C.

Docket No. 84-154. Applicant: University of California, San Diego, La Jolla, CA 92093. Instrument: Kelvin probe and electronic controls. Manufacturer: Delta-Phi-Elektronik, West Germany, Intended use: See notice at 49 FR 19562.

Comments: None received.

Decision: Approved. No instrument of equivalent scientific value to the foreign instrument, for such purposes as it is intended to be used, is being manufactured in the United States.

Reasons: The foreign instrument is capable of measuring the surface work function with an accuracy of 0.1 millivolts. The National Bureau of Standards advises in its memorandum dated July 5, 1984 that (1) the capability of the foreign instrument described above is pertinent to the applicant's intended purpose and (2) it knows of no domestic instrument or apparatus of equivalent scientific value to the foreign instrument for the applicant's intended use.

We know of no other instrument or apparatus of equivalent scientific value to the foreign instrument which is being manufactured in the United States.

(Catalog of Federal Domestic Assistance Program No. 11.105, Importation of Duty-Free Educational and Scientific Materials)

Frank W. Creel
Acting Director Statutory Import Programs Staff.

[FR Doc. 84-18928 Filed 7-17-84; 8:45 am]
BILLING CODE 3510-DS-M

Duke University Medical Center; Withdrawal of Application for Duty-Free Entry of Scientific Articles

Duke University Medical Center has withdrawn Docket Number 84-173, an application for duty-free entry of a Power Supply. Accordingly, further administrative proceedings will not be taken by the Department of Commerce with respect to this application.

(Catalog of Federal Domestic Assistance Program No. 11.105, Importation of Duty-Free Educational and Scientific Materials

Frank W. Creel,
Acting Director, Statutory Import Programs Staff.

[FR Doc. 84-18929 Filed 7-17-84; 8:45 am]
BILLING CODE 3510-DS-M

[C-223-401]

Initiation of a Countervailing Duty Investigation; Portland Hydraulic Cement from Costa Rica

AGENCY: International Trade Administration, Import Administration, Commerce.

ACTION: Notice of initiation of countervailing duty investigation.

SUMMARY: On the basis of a petition filed with the U.S. Department of Commerce, we are initiating a countervailing duty investigation to determine whether manufacturers, producers, or exporters in Costa Rica of portland hydraulic cement as described in the "Scope of the Investigation" section below, receive benefits which constitute bounties or grants within the meaning of the countervailing duty law. If our investigation proceeds normally, we will make our preliminary determination on or before September 14, 1984.

EFFECTIVE DATE: July 18, 1984.

FOR FURTHER INFORMATION CONTACT: Terry Link, Office of Investigations Import Administration, International Trade Administration, United States Department of Commerce, 14th Street & Constitution Avenue NW., Washington, D.C. 20230; telephone (202) 377-0189.

SUPPLEMENTARY INFORMATION:

Petition

On June 1, 1984, we received a petition from the Puerto Rican Cement Company, Inc. and the San Juan Cement Company, Inc., on behalf of the portland hydraulic cement industry. In compliance with the filing requirements of § 355.26 of the Commerce Regulations (19 CFR 355.26), the petition alleges that manufacturers, producers, or exporters in Costa Rica of portland hydraulic cement receive, directly or indirectly, benefits which constitute bounties or grants within the meaning of section 303 of the Tariff Act of 1930, as amended (the Act).

Costa Rica is not a "country under the Agreement" within the meaning of section 701(b) of the Act and, therefore, section 303 of the Act applies to this investigation. Since the merchandise being investigated is nondutiable, but there is no "international obligation" within the meaning of section 303(a)(2) of the Act which requires an injury determination for nondutiable merchandise from Costa Rica, the domestic industry is not required to allege that, and the United States International Trade Commission is not required to determine whether, imports of this product cause or threaten to cause material injury to a U.S. industry.

Initiation of the Investigation

Under section 702(c) of the Act, we must determine, within 20 days after a petition is filed, whether the petition sets forth the allegations necessary for the initiation of a countervailing duty investigation and whether it contains information reasonably available to the petitioner supporting the allegations. We have examined the petition on portland hydraulic cement, and we have found that the petition meets those requirements. Therefore, we are initiating a countervailing duty investigation to determine whether the manufacturers, producers, or exporters in Costa Rica of portland hydraulic cement, as described in the "Scope of the Investigation" section of this notice, receive benefits which constitute bounties or grants. If our investigation proceeds normally, we will make our preliminary determination by September 14, 1984.

Scope of the Investigation

The product covered by this investigation is "portland hydraulic cement", which is portland hydraulic cement, other than white, nonstaining portland cement, as currently provided for in item 511.1440 of the *Tariff Schedules of the United States Annotated. Allegations of Bounties or Grants.*

The petition alleges that manufacturers, producers, or exporters in Costa Rica of portland hydraulic cement receive the following benefits which constitute bounties or grants:

- Export Processing Zones.
- Tax Credit Certificates (CATs).
- Certificate for Increasing Exports (CIEX).
- Other Export Benefits.

Dated: July 11, 1984.

Alan F. Holmer,

Deputy Assistant Secretary for Import Administration.

[FR Doc. 84-18969 Filed 7-17-84; 8:45 am]

BILLING CODE 3510-DS-M

Bona Fide Motor Vehicle Manufacturers for U.S. and Canadian Automotive Trade

AGENCY: U.S Department of Commerce Automotive Affairs and Consumer Goods, Office of Automotive Industry Affairs.

ACTION: List of Names and Addresses of Bona Fide Motor Vehicle Manufacturers.

SUMMARY: In accordance with headnote 2 subpart B, 6, Schedule 6 of the Revised Tariff Schedules of the United States (19 U.S.C. 1202) and 15 CFR Chapter VI, Part 615, the following is a list of the names and addresses of bona fide motor vehicle manufacturers, as determined by the Deputy Assistant Secretary for Automotive Affairs and Consumer Goods, Department of Commerce, as well as the effective date for each such determination. Each determination shall be effective for the 12-month period beginning on the date shown following the name and address of the manufacturer. From time to time this list may be revised to reflect additions, deletions, or other necessary changes.

EFFECTIVE DATE: May 31, 1984.

FOR FURTHER INFORMATION CONTACT: Cathy Roe, Director, Automotive Parts, and Suppliers Division, (202) 377-1419.

Michael A. Driggs,

Deputy Assistant Secretary for Automotive Affairs and Consumer Goods.

United States Bona Fide Motor Vehicle Manufacturers May 31, 1984 With Date of Certification

Adolph-Knapheide Truck Equipment Co., 1701 Fairfax Trfwy., Kansas City, KS 66115, August 1, 1983

Allentown Brake and Wheel Service, Inc., R.D. #8, P.O. Box 2088, Allentown, PA 18001, October 19, 1983

AM General Corporation, 14250 Plymouth Road, Detroit, MI 48232, September 19, 1983

American La France, Division of Figgie International, Inc., 1051 S. Main Street, Elmira, New York 14902, July 8, 1983

American Motors Corporation, 27777 Franklin Road, South, MI 48034, January 1, 1984

American Trailer Service, Inc., 2814 North Cleveland Avenue, St. Paul, Minnesota 55113, January 1, 1984

American Transportation Corporation, Highway 65 South, Conway, Arkansas 72032, April 19, 1984

Amthor's Welding Service, Inc., 307 State Route 52 East, Walden, New York 12586, July 9, 1983

H. G. Anderson Equipment Corporation, P.O. Box 357, 480 South Street, Rensselaer, NY 12144, October 4, 1983

Arctco, Inc., P.O. Box 810, Thief River Falls, MN 56701, August 2, 1983

Arkansas Trailer Mfg. Co., Inc., P.O. Box 4080, 32nd & Elm Street, Little Rock, Arkansas 72214, January 1, 1984

Armored Vehicle Builders, Inc., Route 41, Central Berkshire Blvd., Pittsfield, MA 01201, November 1, 1983

Arrow Trailer & Equipment Co., 140 North Dirksen Parkway, Springfield, Illinois 62702, March 31, 1984

Automated Waste Equipment Company, Inc., 209 Bakers Basin Road, Lawrenceville, New Jersey 08648, September 1, 1983

Automotive Rentals, Inc., dba Fleet Body Engineering, 5655 S. 122nd E. Avenue, Tulsa, Oklahoma 74147, January 18, 1984

Automotive Service Company, 111-113 North Waterloo, Jackson, Michigan 49204, January 1, 1984

Avanti Motor Corporation, P.O. Box 1916, South Bend, Indiana 46634, January 1, 1984

Aztec Products, P.O. Box 659, 102 Sentry Dr. North, Mansfield, TX 76063, December 2, 1983

Bankhead Enterprises, Inc., 1345 Bankhead Avenue, Atlanta, Georgia 30318, August 1, 1983

Beam Truck and Body Inc., 433 Cumberland Hill Road, Woonsocket, RI 02895, September 1, 1983

Bender's Sales and Service, Inc., 4805 Holland, Saginaw, Michigan 48601, November 15, 1983

Benson Truck Bodies, Inc., P.O. Box 49, Mineral Wells, WV 26150, August 1, 1983
Allan U. Bevier, Inc., 4514 Hollins Ferry Road, Baltimore, MD 21227, April 1, 1984
Bibeau Enterprises, Route 102, Londonderry, NH 03053, October 15, 1983
Birmingham Manufacturing Co., Inc., 193 Main Street, Springville, AL 35146, August 1, 1983
Blue Bird Body Company, P.O. Box 937, North Camellia Road, Fort Valley, Georgia 31030, January 19, 1984
Boone Trailers, Inc., 154 Park Street, Palmer, MA 01069, January 1, 1984
Boyertown Auto Body Works, Third & Walnut Streets, P.O. Box 418, Boyertown, PA 19512, September 1, 1983
Brake and Equipment Co., Inc., 11911 W. Silver Spring Road, P.O. Box 25506, Milwaukee, Wisconsin 53225, August 1, 1983
Brake Service and Parts, Inc., 170 Washington Street, P.O. Box 942, Bangor, ME 04401, August 1, 1983
Brown Cargo Van, Inc., 807 East 29th Street, Lawrence, Kansas 66044, April 30, 1984
Bud Industries, Inc., 100 Pulaski Street, West Warwick, RI 02893, December 5, 1983
Bus Andrews Equipment Sales and Service, Inc., 2828 E. Kearney Street, Springfield, Missouri 65803, January 1, 1984
Bus Industries of America Inc., Base Road, R.D. #1, Oriskany, NY 13424, April 1, 1984
Camelot Motors Corporation, 890 S. Marshall Ave., P.O. Box 517, Marshall, Michigan 49068, March 1, 1984
The Carnegie Body Company, 9500 Brookpark Road, Cleveland, OH 44129, January 1, 1984
Carpenter Body Works, Inc., 1500 W. Main Street, P.O. Box 128, Mitchell, Indiana 47446, January 1, 1984
Centennial Industries Div., Douglas & Lomason Company, P.O. Box 708, Columbus, GA 31993, June 1, 1984
Champion Home Builders Co., 5573 E. North Street, Dryden, Michigan 48428, August 1, 1983
Chrysler Corporation, CIMS 418-37-10, 1200 Chrysler Drive, P.O. Box 1919, Highland Park, Michigan 48288, January 18, 1984
City Spring Works, Inc., 1127 W. Main St., Oklahoma City, Oklahoma 73106, August 1, 1983
B. M. Clark Company, Inc., Route 17—P.O. Box 185, Union, Maine 04862, January 14, 1984
Clement Industries, Sibley Road, P.O. Box 914, Minden, Louisiana 71055, August 1, 1983
CMI, Load King Division, Rose & Elm Streets, Elk Point, South Dakota 57025, August 1, 1983
Coach & Equipment Mfg. Corp., P.O. Box 36, Penn Yan, N.Y. 14527, March 14, 1984
Collins Industries, Inc., Box 58, Hutchinson, Kansas 67501, January 1, 1984
Columbia Car Corporation, 3110 International Lane, Madison, Wisconsin 53704, August 1, 1983
Commercial Truck & Trailer, Inc., 313 N. State Street, Girard, Ohio 44420, January 1, 1984
Concept Seating Corp., St. Rd. 15, Toll Road, Bristol, Indiana 46507, January 1, 1984
Cook Body Company, 3701 Harlee Avenue, Charlotte, North carolina 28208, October 22, 1983
Correct Manufacturing Corp., London Road Extension, Delaware, Ohio 43015, July 1, 1983
Corts Truck Equipment, Inc., Mohawk Street, Whitesboro, New York 13492, August 1, 1983
Crane Carrier Company, 1925 North Sheridan, Tulsa, Oklahoma 64151, January 1, 1984
Crenshaw Corporation, P.O. Box 24217, 1700 Commerce Road, Richmond, Virginia 23224, July 1, 1984
Crown Coach Corporation, 2428 East 12th Street, Los Angeles, California 90021, January 1, 1984
Custom Sales and Service, Inc., 11th Street & 2nd Road, Hammonton, N.J. 08037, January 1, 1984
D&J Seating, P.O. Box Z, Edwardsburg, MI 49111, January 1, 1984
Daleiden's Inc., 425 E. Vine Street, Kalamazoo, Michigan 49001, January 31, 1984
Dealers Truck Equipment Co., Inc., 2400 Midway Street, P.O. Box 31435, Shreveport, Louisiana 71130, January 1, 1984
Decker Tank Company, 300 Lincoln Ave., Hawthorne, New Jersey 07506, November 3, 1983
Delavan Industries, Inc., 1728 Walden Avenue, Buffalo, New York 14225, May 1, 1984
Dickenson Lines, Inc., 1600 S. 12th Street, Princeton, MN 55371, April 1, 1984
Donovan Spring & Equipment Co., Inc., 50 Upton Street, Manchester, NH 03103, July 1, 1983
Dunham Manufacturing Co., Inc., P.O. Box 430, Railroad Avenue, Minden, Louisiana 71058, January 1, 1984
Duplex Truck Division, The Nolan Company, Gundy Drive, P.O. Box 295, Midvale, Ohio 44653, October 1, 1983
Duralite Truck Body and Container Corporation, 1300 Bush Street, Baltimore, Maryland 21230, January 1, 1984
E&R Trailer Sales, Inc., R.R. #1, Middle Point, Ohio 45863, January 1, 1984
Eagle International, Inc., P.O. Box 4119, 2045 Les Mauldin Blvd., Brownsville, Texas 78520, January 1, 1984
Eastern Tank Corporation, 290 Pennsylvania Avenue, Paterson, New Jersey 07503, January 1, 1984
Eight Point Trailer Corporation, 6100 E. Washington Boulevard, Los Angeles, California 90040, January 18, 1984
Elder International, Inc., 5875 Kelley Street, Houston, Texas 77252, August 1, 1983
Equipment Service, Inc., 40 Airport Road, Hartford, Connecticut 06114, April 1, 1983
Esquire, Inc., 21861 Protecta Drive, Elkhart, Indiana 46516, January 1, 1984
Euclid Division of Clark, Michigan Company, 22221 St. Clair Avenue, Cleveland, Ohio 44177, January 16, 1984
Johns Evans Manufacturing Co., Inc., P.O. Box 669, Sumter, South Carolina 29150, October 1, 1983
Ewell Equipment Company, Inc., 307 N. Timberland Drive, Lufkin, Texas 75901, February 2, 1984
Excalibur Automobile Corporation, 1735 South 108th Street, Milwaukee, Wisconsin 53214, May 22, 1984
Fifth Wheel, Inc., P.O. Box 15855, 15335 East Admiral Place, Tulsa, Oklahoma 74116, January 1, 1984
Fleetwood Motor Homes, 3125 Myers Street, Riverside, California 92523, August 1, 1983
Fleetwood Motor Homes of California, Inc., P.O. Box 1549, Riverside, California 92502, June 27, 1983
The Flxible Corporation, 970 Pittsburgh Drive, Delaware, OH 43015, November 1, 1983
Ford Motor Company, The American Road, Dearborn, MI 48121, January 18, 1984
Freightliner Corporation, 4747 North Channel Avenue, Portland, OR 97217, December 14, 1983
French Tool & Manufacturing Co., 2501 S. Commerce Drive, P.O. Box 753, Midland, TX 79703, July 1, 1983
Freuhauf Corporation, 10900 Harper Avenue, P.O. Box 238, Detroit, Michigan 48232-9961, December 1, 1983
Frink American, Inc., 205 Webb Street, Clayton, New York 13624, October 1, 1983
FWD Corporation, 105 East 12th Street, Clintonville, Wisconsin 54929, January 1, 1984
Peter Garafano & Son, Inc., 500 Marshall Street, Paterson, NJ 07503, June 5, 1983
Gelco Truck Leasing, 5250 Old Maumee Road, Fort Wayne, IN 46803, January 1, 1984
General Trailer Services, Inc., 2620 Cambell Blvd., P.O. Box 8, Ellenwood, GA 30049, February 25, 1984
General Motors Corporation, Room 12-136, 3044 West Grand Boulevard, Detroit, Michigan 48202, January 19, 1984
General Truck Equipment & Trailer Sales, Inc., P.O. Box 6954, 5310 Broadway Avenue, Jacksonville, Florida 32236-695, January 1, 1984
Gilling Corporation, P.O. Box 3003, 25800 Clawiter Road, Hayward, CA 94540, January 1, 1984
Gilson Brothers Company, P.O. Box 152, Plymouth, Wisconsin 53073, September 28, 1983
Gooch Brake & Equipment Company, 506 Grand Avenue, Kansas City, Missouri 64106, January 1, 1984
Gratiot Equipment Co., 1244 E. Center Street, Ithaca, Michigan 48847, September 1, 1983
The Greyhound Corporation, Greyhound Tower, Phoenix, Arizona 85077 (doing business through), Motor Coach Industries, Inc., Pembina, North Dakota 58271, Transportation Mfg. Corp., Roswell, New Mexico 88201 and Romex, Inc., Roswell, NM 88201, August 1, 1983
Grumman Olson, a Division of Grumman Allied Industries, Inc., 445 Broad Hollow Road, Melville, New York 11747, January 1, 1984
Hackney and Sons, 400 Hackney Avenue, P.O. Box 880, Washington, North Carolina 27889, January 1, 1984
Hackney & Sons (Midwest) Inc., 300 Hackney Avenue, P.O. Box 603, Independence, Kansas 67301, September 23, 1983
Harley-Davidson Motor Co., Inc., 3700 West Juneau Avenue, P.O. Box 653, Milwaukee, Wisconsin 53201, April 1, 1984
Harris Truck and Trailer Sales, Incorporated, I-55 and Airport Exit, P.O. Box 619, Cape Girardeau, Missouri 63701, January 1, 1984

Heil Equipment Company of Philadelphia, Incorporated, 1223 Ridge Pike, Conshohocken, PA 19428, January 1, 1984
Hews Company, Inc., 190 Rumery Street, P.O. Box 2520, South Portland, Maine 04106, January 18, 1984
Hilbilt Mfg. Company, Division of Hill Equipment Co., Route 7, Box 5089, Benton, Arkansas 72015, January 1, 1984
Hill-Martin Corporation, P.O. Box 471, 450 N. Main St., Barre, VT 05641, June 1, 1984
Hispano American Corporation, P.O. Box 7295, Alexandria, Virginia 22307, May 15, 1984
Hobbs International, Inc., P.O. Box 69, Keeler Avenue, Norwalk, Connecticut 06856, August 1, 1983
Hobbs Trailers, Division Fruehaug Corporation, P.O. Box 1568, Forth Worth, TX 76101, August 1, 1984
Honda of America Mfg., Inc., 24000 U.S. Route 33, Maryville, OH 43040, January 1, 1984
I-95 Truck Center, Inc., P.O. Box Drawer 57, Smithfield, NC 27577, February 25, 1984
Illinois Auto Central, Inc., 4750 S. Central Avenue, Chicago, Illinois 60638, October 1, 1983
International Harvester Co., 401 North Michigan Avenue, Chicago, Illinois 60611, January 18, 1984
Iowa Mold Tooling Co., Inc., 500 Highway 18 West, Garner, Iowa 50438, June 1, 1984
Iroquois Mfg. Co., Inc., Richmond Road, Hinesburg, Vermont 05461, March 1, 1984
Isometrics, Inc., P.O. Box 660, 1402 N. Scales Street, Reidsville, North Carolina 27320, March 31, 1984
IVECO Trucks of North America, Inc., 3494 Progress Drive, Suite B, Bensalem, PA 19020, January 1, 1984
Jannell & Son Body Company, 840 Cumberland Hill Road, Woonsocket, R.I. 02895, January 1, 1984
Jeep Corporation, 27777 Franklin Road, Southfield, Michigan 48034, January 1, 1984
F.L. Jursik Co., 245 Victor Avenue, Highland Park, MI 48203, July 1, 1983
Kaffenbarger Welding Company, 10100 Ballentine Pike, New Carlisle, OH 45344, January 1, 1984
Kawasaki Motors Mfg. Corp., USA, 6600 Northwest 27th Street, Lincoln, Nebraska 68524, January 1, 1984
Kay Wheel Sales Co., Inc., 1771 Tomlinson Road, Philadelphia, Pennsylvania 19116, September 24, 1984
Kencar Equipment Company, 1906 Lakeview Avenue, Dayton, Ohio 45408-1398, January 1, 1984
Kentucky Manufacturing Company, P.O. Box 17185, Louisville, KY 40217, December 1, 1983
Keystone Coach Manufacturing Co. of Florida, Inc., 501 Nova Road, Ormond Beach, Florida 32704, April 1, 1984
Kidron Body Company, 13442 Emerson Road, Kidron, Ohio 44636, May 1, 1984
Lehigh Vally Packing Corp., P.O. Box 196, Rt. 191 & Rt. 33 Interchange, Stockertown, PA 18083, August 1, 1983
Loadcraft, Division of Allied Products Corp., P.O. Box 431, Highway 377 Curtis Field, Brady, TX 76825, November 1, 1983
LoDal, Inc., East Blvd., P.O. Box 2315, Kingsford, Michigan 49801, April 1, 1984
Long Trailer Service, Inc., P.O. Box 5105, Greenville, South Carolina 29606, January 1, 1984
M&M Equipment, Inc., P.O. Box 152, Lebanon, New Hampshire 03766, March 14, 1984
Mack Trucks, Inc., P.O. Box M, Allentown, Pennsylvania 18105, January 1, 1984
Madison Truck Equipment, Inc., 2410 South Stoughton Road, Madison, Wisconsin 53716, October 22, 1983
Manning Equipment, Inc., 12000 Westport Road, P.O. Box 23229, Louisville, Kentucky 40223, April 16, 1984
Marion Body Works, Inc., 211 W. Eamsdell Street, P.O. Box 500, Marion, WI 54950-0500, May 1, 1984
Mark Body, Division of Core Industries, Inc., 50625 Richard W. Blvd., Mt. Clemens, MI 48046-0128, April 1, 1984
Marmon Motor Co., P.O. Box 402009, Garland, Texas 75040, September 1, 1983
McGraw Commercial Equipment Co., Inc., 7200 East Fifteen Mile Road, Sterling Heights, Michigan 48077, August 1, 1983
Meadows Hydraulics Sales and Services, Inc., U.S. 13 and S. Division St., P.O. Box Drawer "M", Fruitland, Maryland 21826, September 24, 1984
Mercedes-Benz Truck Company, Inc., 4747 N. Channel Avenue, P.O. Box 3849, Portland, Oregon 97208, January 1, 1984
W. F. Mickey Body Co., Inc., P.O. Box 2044, 1505 Bethel Drive, High Point, North Carolina 27261, September 23, 1983
Mid West Truck Equipment Sales, Division of Electrographic Corp., 4041 No. Brush College Road, R.R. #7, Box 463F, Decatur, Illinois 62521, February 22, 1984
Middlekauff, Inc., 1615 Ketcham Avenue, Toldeo, Ohio 43608, January 18, 1983
Mike & Joe Equipment Co., Inc., Rochester Road Equipment, Inc., 1240 Jefferson Road, Rochester, N.Y. 14623, June 1, 1983
Millington Truck Body Co., Inc., 8440 N. State Street, P.O. Box 281, Millington, Michigan 48746, December 1, 1983
Monon Trailer Division of Evans Transportation, P.O. Box 655, 117 N. Walnut Street, Monon, Indiana 47959, August 1, 1983
Moore and Sons, Inc., P.O. Box 30091, 2900 Airways Boulevard, Memphis, Tennessee 38130, December 31, 1983
Morgan Trailer Mfg., Co., t/a Morgan Corporation, Joanna Road, Box 258, Morgantown, PA 19543, January 1, 1984
Motor Truck Equipment Corporation, 2950 Irving Blvd., P.O. Box 47385, Dallas, Texas 75247, December 31, 1983
Mount Vernon Truck Body, Inc., 2222 S. 10th Street, Highway 37 South, Mount Vernon, Illinois 62864, August 1, 1984
Multi Body & Hoist Corp., 180 Varick Avenue, Brooklyn, NY 11237, December 1, 1983
Mutual Wheel Company, 2345 Fourth Avenue, Moline, Illinois 61265, August 1, 1983
Nabors Trailer, Inc., P.O. Box 979, Mansfield, Louisiana 71052, January 1, 1984
Neil's Automotive Service, Inc., 167 E. Kalamazoo Avenue, Kalamazoo, MI, 49007, January 1, 1984
Nelson Manufacturing Company, 6448 U.S. Route 224, R.R. #1, Ottawa, Ohio 45875, January 1, 1984
Neoplan USA Corporation, 700 Gottlob Auwaeter Drive, Lamar, Colorado 81052, January 1, 1984
The Ness Company, Inc., P.O. Box 667, 270 N. Zarfoss Drive, West York Industrial Park, York, Pennsylvania 17405, January 1, 1984
New Method Equipment Company, P.O. Box 4638, 707—27th Avenue, S.W., Cedar Rapids, Iowa 52407, December 31, 1983
New World Edition, Inc., 4030 North Home Street, Mishawaka, Indiana 46545, January 1, 1984
Nissan Motor Manufacturing Corporation U.S.A., Nissan Drive, Smyrna, Tennessee 37167, June 1, 1984
Novi Manufacturing Company, 25071 Seeley Road, Novi, MI 48050, November 1, 1983
Obrecht Trailer Mfg., Inc., 705 East New York Street, Knox, Indiana 46534, August 1, 1983
Ohio Truck Equipment, Inc., 4100 Rev Drive, Cincinnati, Ohio 45232, December 10, 1983
Oilmen's Equipment Corporation, P.O. Box 2807—140 Cedar Spring Road, Spartanburg, SC 29304
Olson Trailer and Body Builders Co., P.O. Box 2445, 2740 S. Ashland Avenue, Green Bay, Wisconsin 54306, August 1, 1983
Omaha Standard, Inc., 2401 W. Broadway, Council Bluffs, Iowa 51501, January 1, 1984
Oshkosh Truck Corporation, 2307 Oregon Street, P.O. Box 2566, Oshkosh, Wisconsin 54903, January 18, 1984
Ottawa Truck Division, Gulf & Western Manufacturing Co., 415 East Dundee Street, Ottawa, Kansas 66067, December 10, 1983
Outboard Marine Corporation, 100 Sea Horse Drive, Waukegan, Illinois 60085, January 18, 1984
PACCAR, Incorporated, d/b/a/ Kenworth Truck Company & Peterbilt Motors Company, P.O. Box 1518, Bellevue, Washington, 98009, January 18, 1984
Palmer Spring Company, 355 Forest Avenue, Portland, Maine 04101, January 18, 1984
Palmer Trailer Sales Co., Inc., Route 20 East, Palmer, Mass. 01069, August 1, 1983
Peabody Galion, P.O. Box 607, 500 Sherman Street, Galion, Ohio 44833, October 31, 1983
Peerless Division—Lear Siegler Incorporated, 18205 S.W. Boones Berry Road, Tualatin, Oregon 97062, January 9, 1984
Perfection Equipment Company, 5100 West Reno, Oklahoma City, Oklahoma 73127, January 12, 1984
Pezzani & Reid Equipment Co., Inc., 3960 West Fort St., Detroit, Michigan 48216, August 1, 1983
Phoenix Manufacturing, Inc., 375 West Union Street, Nanticoke, PA. 18634, February 20, 1984
Pioneer Heavy Duty Parts, Inc., 2000 Fall River Avenue (RT. 6), Seekonk, Massachusetts 02771, August 1, 1983
Polaris Industries, Inc., 1225 North County road 18, P.O. Box 1284, Minneapolis, Minnesota 55440, February 1, 1984
C.E. Pollard Company, 13575 Auburn Avenue, Detroit, Michigan 48223, November 1, 1983
Power Brake Service & Equip. Co. Inc., 1022 Carnegie Avenue, Cleveland, Ohio 44115, December 31, 1983
Progress Industries, Inc., 400 East Progress Street, Arthur, Illinois 61911, October 1, 1983

PSI Mobil Products, Inc., 25 Eldridge, Mt. Clements, Michigan 48043, July 1, 1983
Quality Coach, Inc., 29194 Philips Street, Elkhart, Indiana 46514, January 1, 1984
Quality Truck & Equipment Co., P.O. Box 102, I-55 Beltline & Mercer Avenue, Bloomington, Illinois 61701, November 15, 1983
R/S Truck Body Company, Inc., P.O. Box 420, Allen, Kentucky 41601, September 23, 1983
Raven Metal Product, Inc., d/b/a/ Ravens Trailer Sales, 5100 No. Wooster Highway, P.O. Box 525, Dover, Ohio 44622, September 1, 1983
Recreative Industries, Inc., 60 Depot Street, Buffalo, New York 14206, July 13, 1983
Reliable Spring Co., Inc., 10557 South Michigan Ave., Chicago, Illinois 60628, August, 1983
Roberts Manufacturing, Inc., P.O. Box 766, Elkhart, Indiana 46515, January 1, 1984
Rowen Products, Inc., P.O. Box 332, Elkhart, Indiana 46515, January 1, 1984
Rowland Equipment, Inc., 2900 N.W. 73rd Street, Miami, Florida 33147, November 19, 1983
Ryder Service Center, Ryder Truck Rental Inc., 5115 Cockrell Hill Road, Dallas, Texas, 75211, September 1, 1983
Ryder Truck Rental, Inc., 4709 West 86th Street, P.O. Box 68490, Indianapolis, Indiana 46206, January 1, 1984
Ryder Truck Rental, Inc., Geryville Pike, P.O. Box 100, Pennsburg, PA 18073, August 1, 1983
Schien Body and Equipment Co., North on University, Carlinville, Illinois 62626, August 1, 1983
Scientific Brake and Equipment Co., P.O. Box 840, 314 W. Genesee Avenue, Saginaw, Michigan 48606, January 19, 1984
Sharpsville Steel Equip. Co., 6th & Main Streets, Sharpsville, Pennsylvania 16150, January 2, 1984
Shear Truck Mfg. Co., Inc., 2321 East Pioneer Drive, Irving, TX. 75061, October 20, 1983
Skillcraft Industries, Inc., 355 Center Ct., Venice, Florida 33595, September 1, 1983
Somerset Welding & Steel, Inc., P.O. Box 735, 733 S. Center Avenue, Somerset, Pennsylvania 15501, January 1, 1984
Special Trucks, Inc., 5040 Hoevel Road, Fort Wayne, Indiana 46806, January 1, 1984
Sportcraft, Inc., 57976 Co. Rd. 3, Elkhart, Indiana 46517, January 1, 1984
Starcraft Automotive Division, 2703 College Ave., Goshen, Indiana 46526, August 1, 1983
Steffen Incorporated 623 West 7th Street, Sioux City, Iowa 51103, November 4, 1983
T & J Industries, Inc., 13850 Wyandotte, P.O. Box 8620 Kansas City, Missouri 64114 September 1, 1983
Taylor-Dunn Mfg. Company, 2114 West Ball Road, Anaheim, California 92804, October 3, 1983
Terex Corporation, State Route 91, Hudson, Ohio 44236, January 1, 1984
Thomas Built Buses, Inc., 1408 Courtesy Road, P.O. Box 2450, High Point, North Carolina 27261, March 1, 1984
Three R Industries Inc., 80380 Scotch-Settlement, Romeo, Michigan 48065, June 1, 1983
Traffic Transport Engineering, Inc., 28900 Goodard Road, Romulus, Michigan 48174, July 1, 1983
Tracey Road Equipment, Inc., Manlius Center Road, P.O. Box 469, East Syracuse, NY 13057, May 1, 1984
Trailways Manufacturing, Inc., P.O. Box 3169, 2800 Rebel Drive, Harlingen, TX 78550, April 1, 1984
Transport Equipment Company, 3400—6th Avenue, South, P.O. Box 3817, Seattle, Washington 98124, January 18, 1984
Travelcraft, Inc., 1135 Kent Street, Elkhart, Indiana 46514, January 1, 1984
Triangle Fleet Service, 801 Coliseum Blvd. West, Forth Wayne, Indiana 46808, January 1, 1984
Trotter Equipment Inc., Outer Washington Street, Watertown, NY 13601, March 1, 1984
Truck Equipment, Inc., P.O. Box 3265, 1560 N.E. 44th Avenue, Des Mones, Iowa 50316, January 1, 1984
Truck Equipment, Inc., P.O. Box 1030, 85 East Longfield Avenue, Mansfield, Ohio 44901, March 16, 1984
Truck Equipment Distributors/ Division of Truck Parts & Equipment Co., 2020 Southwest Blvd., Tulsa, Oklahoma 74107, August 1, 1983
Truck Equipment Service Company, 800 Oak Street, Lincoln, Nebraska 68521, January 1, 1984
Truck Parts & Equipment Co., 2120 Southwest Blvd. Tulsa, Oklahoma 74107, October 1, 1983
Truck Parts and Equipment, Inc., 4501 West Esthner, Wichita Kansas 67209, December 11, 1983
Truck & Trailer Equipment Co., 4214 West Mt. Hope-Road, P.O. Box 13126, Lansing, Michigan 48901, August 1, 1983
Truckers Equipment Co., 1501 N. Port Avenue, P.O. Box 4727, Corpus Christi, TX 78469-4727, December 1, 1983
Trucker Equipment, Inc., 202 N. 77 Sunshine Strip, Harlingen, TX 78550, December 1, 1983
Twin Bay Industries, Inc., 6989 Cairn Highway, P.O. Box 37, Elk Rapids Michigan 49629, April 30, 1983
ULTRAVAC Division of Cannon Industries, Inc., 3822 W. Elm Street, P.O. Box 09336 Milwaukee, Wisconsin 53209, January 1, 1984
Unicell Body Company, Inc., 571 Howard Street, P.O. Box 426, Buffalo, NY 14240, January 1, 1984
Union City Body Company, Inc., 1015 West Pearl Street, P.O. Box 190, Union City, Indiana 47390, September 1, 1983
Unit Rig & Equipment Co., P.O. Box 3107, Tulsa, Oklahoma 74101, January 1, 1984
Universal Go Tract of Georgia Ltd., 863 Industrial Park Drive, Marietta, Georgia 30062, June 1, 1984
Van Con, Incorporated, 123 Williams Street, Middlesex, New Jersey 08846, September 1, 1983
Van Vinyl, Inc., 27895 CR 10 West, Elkhart, Indiana 46514, January 1, 1984
Volkswagen of America, Inc., 888 W. Big Beaver Road, Troy, Michigan 48007-3951, October 11, 1983
Volvo White Truck Corporation, 1031 Summit Avenue, P.O. Box D-I, Greensboro, N.C. 27402, January 1, 1984
Vulcan Trailer Manufacturing Co., 300 Industrial Parkway, Bessemer, Alabama 35020, October 1, 1983
WABCO Construction & Mining Equipment, a Division of American Standard, Inc., 2300 N.E. Adams Street, P.O. Box 240 Peoria, Illinois 61639, February 1, 1984
Wagoner Machinery Inc., 945 Safin Road, Columbus, Ohio 43204, October 1, 1983
Walter Equipment USA, Inc., Northeastern Industrial Park, P.O. Box 279, Guilderland Center, NY 12085, January 1, 1984
Watkins Motor Trucks, Inc., 2325 West Second Street, Chester, PA 19016, August 1, 1983
Wayne Corporation (An Indiana Head Company), P.O. Box 1447 Industries Road, Richmond, Indiana 47374
Wayne Engineering Corporation, 2412 West 27th Street, P.O. Box Ceder Falls, Iowa 50613, October 1, 1983
Wheels and Brakes, Inc., 1270 Memorial Drive S.E., Atlanta, Georgia 30316, August 1, 1983
Wheels and Brakes Inc., 4539 Rutledge Pike, Knoxville, Tennessee 37914, August 1, 1983
Winnebago Industries, Inc., P.O. Box 152, Jct. Highways 9 & 69, Forest City, Iowa 50436, March 19, 1984
Wyman's Incorporated, Northfield Road, P.O. Box 541, Montpelier, Vermont 05602, July 1, 1983
York Truck Equipment, Inc., P.O. Box 6493, Jacksonville, FL 32236, April 1, 1984

[FR Doc. 84-18500 Filed 7-17-84; 8:45 am]
BILLING CODE 3510-25-M

National Oceanic and Atmospheric Administration

Marine Mammal Permits; Receipt of Request for Modification of Permit No. 431; Dr. James R. Gilbert

Notice is herby given that Dr. James R. Gilbert, Division of Wildlife, University of Maine, Orono, Maine 04469, has requested a modification of Permit No. 431 issued on August 15, 1983 (48 FR 165) under the authority of the Marine Mammal Protection Act of 1972 (16 U.S.C. 1361-1407), and the Regulations Governing the Taking and Importing of Marine Mammals.

Permit No. 431 authorizes the collection of up to 500 dead harbor seals (*Phoca vitulina*) and up to 1,250 dead harbor porpoise (*Phocoena phocoena*) taken incidental to commerical fishing activities in the New England area or otherwise available, as described in the application.

The Permit Holder is requesting to add an aggregate of 50 dead, entangled mammals legally taken from commerical fisheries each year for five (5) years. The aggregate will be composed of the following species: Gray seal (*Halichoerus grypus*), white-sided dolphin (*Lagenorhynchus acutus*), common dolphin (*Delphinus delphis*), white-beaked dolphin (Lagenorhynchus

albirostris), and pilot whale (*Globicephala melaena*).

Written data, views, or requests for a public hearing on this modification request should be submitted to the Assistant Administrator for Fisheries, National Marine Fisheries Service, U.S. Department of Commerce, Washington, D.C. 20235, within thirty (30) days of the publication of this notice. Those individuals requesting a hearing should set forth the specific reasons why a hearing on this particular request would be appropriate. The holding of such hearing is at the discretion of the Assistant Administrator for Fisheries.

All statements and opinions contained in this request are summaries of those of the Applicant and do not necessarily reflect the views of the National Marine Fisheries Service.

Documentation pertaining to the above modification request is available for review in the following offices:

Assistant Administrator for Fisheries, National Marine Fisheries Service, 3300 Whitehaven Street, NW., Washington, D.C., and

Regional Director, Northeast Region, National Marine Fisheries Services, 14 Elm Street, Federal Building, Gloucester, Massachusetts 01930.

Dated: July 11, 1984.

Richard B. Roe,

Director, Office of Protected Species and Habitat Conservation.

[FR Doc. 84-18942 Filed 7-17-84; 8:45 am]

BILLING CODE 3510-22-M

Marine Mammals Permit; Issuance of Permit to Import Marine Mammals; Zoological Park

On June 7, 1984, notice was published in the Federal Register (49 FR 23682), that an application had been filed with the National Marine Fisheries Service by St. Louis Zoological Park, Forest Park, St. Louis, Missouri 63110, for a permit to import four (4) Baikal seals (*Phoca sibirica*) for the purpose of public display.

Notice is hereby given that on July 11, 1984, and as authorized by the provisions of the Marine Mammal Protection Act of 1972 (16 U.S.C. 1361-1407), the National Marine Fisheries Service issued a Public Display Permit to the St. Louis Zoological Park, subject to certain conditions set forth therein.

The Permit is available for review by interested persons in the following offices:

Assistant Administrator for Fisheries, National Marine Fisheries Service, 3300 Whitehaven Street, NW., Washington, D.C., and

Regional Director, Southeast Region, National Marine Fisheries Service, 9450 Koger Boulevard, Duval Building, St. Petersburg, Florida 33702.

Dated: July 11, 1984.

Richard B. Roe,

Director, Office of Protected Species and Habitat Conservation, National Marine Fisheries Service.

[FR Doc. 84-18941 Filed 7-17-84; 8:45 am]

BILLING CODE 3510-22-M

Emergency Striped Bass Research Study; Meeting

AGENCY: National Marine Fisheries Service (NOAA) National Oceanic and Atmospheric Administration, Commerce.

SUMMARY: The National Marine Fisheries Service and the U.S. Fish and Wildlife Service will hold a joint meeting to discuss progress on the Emergency Striped Bass Research Study as authorized by the amended Anadromous Fish Conservation Act (Pub. L. 96-118).

DATE: The meeting will convene on Monday, August 6, 1984, at 10:00 a.m., and will adjourn at approximately 4:00 p.m. The meeting is open to the public.

ADDRESS: Room 7000 A&B, Interior Building, C Street between 18th and 19th NW., Washington, D.C. 20240.

FOR FURTHER INFORMATION CONTACT: Austin R. Magill, Office of Fisheries Management, National Marine Fisheries Service, Washington, D.C. 20235, Telephone: (202) 634-7454.

Dated: July 13, 1984.

Roland Finch,

Director, Office of Fishery Management.

[FR Doc. 84-19037 Filed 7-17-84; 8:45 am]

BILLING CODE 3510-22-M

COMMITTEE FOR THE IMPLEMENTATION OF TEXTILE AGREEMENTS

Requesting Public Comment on Bilateral Consultations With the Government of the People's Republic of China

Correction

In FR Doc. 84-18473 beginning on page 28427 in the issue of Thursday, July 12, 1984, make the following correction on page 28428. In the first column, the second table, the date "Aug. 28, 1984" should read "Aug. 28, 1985"

BILLING CODE 1505-01-M

Requesting Public Comment on Bilateral Textile Consultations With the Government of Hong Kong To Review Trade in Category 659pt. (Man-Made Fiber Overalls, Coveralls and Jumpsuits)

July 13, 1984.

On June 18, 1984 the Government of the United States requested consultations with the Government of Hong Kong with respect to Category 659pt. (man-made fiber overalls, coveralls and jumpsuits in TSUSA numbers 383.2005, 383.8605, 383.9210 and 379.9605). This request was made on the basis of the agreement of June 23, 1982, as amended, between the Governments of the United States and Hong Kong, relating to trade in cotton, wool and man-made fiber textiles and textile products.

The purpose of this notice is to advise the public that, if no solution is agreed upon in consultations between the two governments, the Committee for the Implementation of Textile Agreements may request the Government of Hong Kong to limit exports in Category 659pt., produced or manufactured in Hong Kong and exported to the United States during 1984. The Government of the United States reserves the right to control imports in this category at the established limit.

Anyone wishing to comment or provide data or information regarding the treatment of Category 659pt. under the bilateral agreement, or on any other aspect thereof, or to comment on domestic production or availability of textile products included in this category, is invited to submit such comments or information in ten copies to Mr. Walter C. Lenahan, Chairman, Committee for the Implementation of Textile Agreements, International Trade Administration, U.S.

Department of Commerce, Washington, D.C. 20230. Because the exact timing of the consultations is not yet certain, comments should be submitted promptly. Comments or information submitted in response to this notice will be available for public inspection in the Office of Textiles and Apparel, Room 3100, U.S. Department of Commerce, 14th and Constitution Avenue NW., Washington, D.C., and may be obtained upon written request.

Further comment may be invited regarding particular comments or information received from the public which the Committee for the Implementation of Textile Agreements considers appropriate for further consideration.

The solicitation of comments regarding any aspect of the agreement or the implementation thereof is not a waiver in any respect of the exemption contained in 5 U.S.C. 553(a)(1) relating to matters which constitute "a foreign affairs function of the United States."

Walter C. Lenahan,

Chairman, Committee for the Implementation of Textile Agreements.

[FR Doc. 84-18967 Filed 7-17-84; 8:45 am]

BILLING CODE 3510-DR-M

Requesting Public Comment on Bilateral Textile Consultations on Certain Man-Made Fiber Apparel in Category 659pt. From Taiwan

July 13, 1984.

On July 5, 1984, the American Institute in Taiwan (AIT), under Section 204 of the Agricultural Act of 1956, as amended (7 U.S.C. 1854), requested the Coordination Council for North American Affairs (CCNNA) to enter into consultations concerning exports to the United States of coveralls, overalls and jumpsuits of man-made fibers T.S.U.S.A. numbers 383.2005, 383.8605, 383.9210, and 379.9605) in Category 659pt., produced or manufactured in Taiwan.

The purpose of this notice is to advise that, if no solution is agreed upon in consultations, the Committee for the Implementation of Textile Agreements may later establish a limit for the entry and withdrawal from warehouse for consumption of man-made fiber apparel in Category 659pt., produced or manufactured in Taiwan and exported to the United States during the twelve-month period which began on January 1, 1984 and extends through December 31, 1984.

Anyone wishing to comment or provide data or information regarding the treatment of Category 659pt. is invited to submit such comments or information in ten copies to Mr. Walter C. Lenahan, Chairman, Committee for the Implementation of Textile Agreements, International Trade Administration, U.S. Department of Commerce, Washington, D.C. 20230. Because the exact timing of the consultations is not yet certain, comments should be submitted promptly. Comments or information submitted in response to this notice will be available for public inspection in the Office of Textiles and Apparel, Room 3100, U.S. Department of Commerce, 14th and Constitution Avenue NW., Washington, D.C., and may be obtained upon written request.

Further comment may be invited regarding particular comments or information received from the public which the Committee for the Implementation of Textile Agreements considersd appropriate for further consideration.

The solicitation of comments regarding any aspect of the agreement or the implementation thereof is not a waiver in any respect of the exemption contained in 5 U.S.C. 553(a)(1) relating to matters which constitute "a foreign affairs function of the United States."

Walter C. Lenahan,

Chairman, Committee for the Implementation of Textile Agreements.

[FR Doc. 84-18968 Filed 7-17-84; 8:45 am]

BILLING CODE 3510-DR-M

DEPARTMENT OF DEFENSE

Directorate of Personal Property; International Through Government Bill of Lading (ITGBL)

AGENCY: Military Traffic Management Command (MTMC).

ACTION: Notice of public viewing of comments received concerning requirements for obtaining and maintaining Department of Defense approval to participate in ITGBL traffic.

SUMMARY: This is to advise industry that letters received in response to MTMC's letter date Feburary 28, 1984, will be available for public viewing from August 1 through 10, 1984.

Letters received from industry regarding MTMC's proposed changes to obtain and maintain their Department of Defense approval for ITGBL carriers will be available for public viewing August 1-10, 1984. The letters will be in the public file, Room 408, Nassif Building, 5611 Columbia Pike, Falls Church, Virginia 22041.

FOR FURTHER INFORMATION CONTACT: Major Michael J. Fry, NQ Military Traffic Management Command, Attn: MT-PPQ (Room 423), 5611 Columbia Pike, Falls Church, VA 22041.

Dated: July 13, 1984.

Nathan R. Berkley,

Colonel, General Staff, Director of Personal Property.

[FR Doc. 84-18969 Filed 7-17-84; 8:45 am]

BILLING CODE 3710-08-M

Office of the Secretary

Privacy Act of 1974; Matching Program—Department of Defense/Office of Personnel Management

AGENCY: Department of Defense.

ACTION: Notice of a matching program—Department of Defense/Office of Personnel Management.

SUMMARY: The Department of Defense proposes to match by computer certain Department of Defense manpower records with personnel records and retirement records of the Office of Personnel Management. The matches will be made under a written agreement between the Department of Defense and the Office of Personnel Management. The Defense Manpower Data Center, Monterey, CA, will perform the matches using data provided by the Office of Personnel Management and information from existing Department of Defense records. A matching report is set forth below.

DATE: The match began on approximately June 1, 1984.

ADDRESS: Send any comments to: William C. Goforth, Staff Executive (Attorney), Defense Privacy Board, c/o OSD Mail Room, Rm: 3A-948, The Pentagon, Washington, DC 20301. Telephone: 202/694-3027

FOR FURTHER INFORMATION CONTACT: Lt. Col. Goforth at the above address and telephone number.

SUPPLEMENTARY INFORMATION: A notice of this match was provided to the President of the Senate, Speaker of the House of Representatives, and the Director of the Office of Management and Budget on July 11, 1984. Set forth below is the information required by paragraph 5.f.1 of the Revised Supplemental Guidance for Conducting Computerized Matching Programs issued by the Office of Management and Budget (47 FR 21656; May 11, 1982). This information has been provided to both Houses of Congress and the Office of Management and Budget.

July 13, 1984.

M.S. Healy,

OSD Federal Register Liaison Officer, Department of Defense.

Report of a Matching Program—Department of Defense and Office of Personnel Management

a. *Authority:* Title 10, United States Code, Section 136.

b. *Program Description:* Using a computer tape of the Central Personnel Data File (CPDF) and the Civil Service Retiree File (CSR) furnished by the Office of Personnel Management (OPM), the Defense Manpower Data Center will conduct the following matches:

(1) Reserve Employment Screening: Identify those members of the Reserve Forces who are also employed in civilian positions within the Government. Individual listings will then be provided the employing activity in order to identify their employees who

are members of the Ready Reserve and subject to call for military duty.

(2) Cost of Living (COLA) Adjustments: Identify those military retirees whose retirement pay must be offset because they are employed by the United States. Individual listings of employees and pertinent COLA adjustment information will be provided to the employing agencies for COLA adjustment.

(3) Civil Service Retirement Military Service Credit: Identify those Civil Service employees who are entitled to military service credit in their Civil Service Retirement. Only the names and service data regarding those individuals who have not signed the required waiver of military retirement will be provided to the Office of Personnel Management.

(4) Retired Regular Military Officers Employed in the Civil Service: Identify those retired Regular Military Officers who are subject to limitations on their Federal compensation. Lists will be reviewed to determine if compensation has been maintained within the limits established by law and overpayments collected from the military retirement pay of the individuals.

(5) Debtors of the Department of Defense: Identify those Civil Service employees and retirees who owe the Department of Defense debts which are overdue. Certain of these records may be provided to employing activities or the Office of Personnel Management for collection assistance in accordance with the provisions of Debt Collection Act of 1982 (Pub. L. 97-365) as implemented.

c. *Records to be Matched:*

(1) Department of Defense System of Records.

The Department of Defense system of records to be used in this match is identified as system S322.10 DLA-LZ, entitled: Defense Manpower Data Center Data Base. The notice for this can be found at 48 FR 26222, June 6, 1983. No change to that notice is required.

(2) Office of Personnel Management Systems of Records.

The Office of Personnel Management systems of records involved are identified as system OPM/Central 1, entitled: Civil Service Retired Master File and system OPM/ GOVT 1, entitled: General Personnel Records. The notices of the systems can be found at 48 FR 37116 et seq., August 25, 1983.

d. *Period of the Match:* The matches will begin on approximately June 1, 1984 and will be semiannually (approximately every six months) thereafter.

e. *Security:* Only the Defense Manpower Data Center personnel who perform the actual match will have access to the entire files. The tapes containing the personal data will be stored in secure data processing facility at the W. B. Church Data Processing Center, Naval Postgraduate School, Monterey, CA. Only authorized personnel will have access to the tape furnished by the Office of Personnel Management. The Office of Personnel Management data will only be used for the purposes set forth above and data regarding individuals who are not matched will not be used for any purpose. The data may be used for statistical purposes, but not to identify specific individuals. Prior to taking any actions regarding hits the data will be reviewed accuracy and applicable procedures will be followed before any benefits are terminated or reduced.

f. *Disposition of Records:* The records furnished by the Office of Personnel Management are only loaned to the Department of Defense and while in the temporary custody any release of information from these files will be made in accordance with established Office Personnel Management procedures and with the approval of that agency. The Office of Personnel Management may either request return of the data furnished or direct its destruction at any time. All records of individuals of interest to the Department of Defense will be entered into appropriate DoD records systems and will only be transferred in accordance with established procedures.

g. *Other Comments:* Only listings relating to the employees of a specific activity will be provided to that activity or agency. The complete listings of hits will only be furnished to and used by the activity responsible for overall program management.

[FR Doc. 84-18940 Filed 7-17-84; 8:45 am]
BILLING CODE 3810-01-M

DEPARTMENT OF ENERGY

International Atomic Energy Agreements; Civil Uses, United States and Canada; Proposed Subsequent Arrangements

Pursuant to section 131 of the Atomic Energy Act of 1954, as amended (42 U.S.C. 2160) notice is hereby given of proposed "subsequent arrangements" under the Agreement for Cooperation Between the Government of the United States of America and the Government of Canada Concerning Civil Uses of Atomic Energy, as amended, and the Additional Agreement for Cooperation Between the Government of the United States of America and the European Atomic Energy Community (EURATOM) Concerning Peaceful Uses of Atomic Energy, as amended.

The subsequent arrangements to be carried out under the above mentioned agreements involve approval for the following sales:

Contract Number S-CA-355, to Health and Welfare Canada, Ontario, Canada, 21.93 grams of uranium, enriched to 2.38% in U-235, for use as standard reference material.

Contract Number S-EU-809, to Franco-Belge De Fabrication De Combustibles, Dessel, Belgium, 148.4 grams of natural uranium, for use as standard reference material.

In accordance with section 131 of the Atomic Energy Act of 1954, as amended, it has been determined that the furnishing of these nuclear materials will not be inimical to the common defense and security.

These subsequent arrangements will take effect no sooner than fifteen days after the date of publication of this notice.

Dated: July 12, 1984.

John R. Brodman,

Acting Deputy Assistant Secretary for International Affairs.

[FR Doc. 84-18935 Filed 7-17-84; 8:45 am]
BILLING CODE 6450-01-M

International Atomic Energy Agreements; Civil Uses; United States and European Atomic Energy Community; Proposed Subsequent Arrangement

Pursuant to section 131 of the Atomic Energy Act of 1954, as amended (42 U.S.C. 2160) notice is hereby given of a proposed "subsequent arrangement" under the Additional Agreement for Cooperation Between the Government of the United States of America and the European Atomic Energy Community (EURATOM) Concerning Peaceful Uses of Atomic Energy, as amended.

This subsequent arrangement to be carried out under the above mentioned agreement involves approval of the following sale: Contract Number S-EU-806, for 148.4 grams of natural uranium, for use as standard reference material by Agip S.P.A., Laboratori Di Medicina, Italy.

In accordance with Section 131 of the Atomic Energy Act of 1954, as amended, it has been determined that the furnishing of this nuclear material will not be inimical to the common defense and security.

This subsequent arrangement will take effect no sooner than fifteen days

after the date of publication of this notice.

Dated: July 12, 1984.

For the Department of Energy.

John R. Brodman,

Acting Deputy Assistant Secretary for International Affairs.

[FR Doc. 84-16937 Filed 7-17-84; 8:45 am]

BILLING CODE 6450-01-M

International Atomic Energy Agreements; Civil Uses; United States and European Atomic Energy Community; Proposed Subsequent Arrangement

Pursuant to section 131 of the Atomic Energy Act of 1954, as amended (42 U.S.C. 2160) notice is hereby given of a proposed "subsequent arrangement" under the Additional Agreement for Cooperation Between the Government of the United States of America and the European Atomic Energy Community (EURATOM) Concerning Peaceful Uses of Atomic Energy, as amended.

The subsequent arrangement to be carried out under the above mentioned agreement involves approval of the following sale: Contract Number S-EU-812, to the Central Bureau for Nuclear Measurements, Geel, Belgium, five grams of uranium-236, for use as reference material.

In accordance with section 131 of the Atomic Energy Act of 1954, as amended, it has been determined that this subsequent arrangement will not be inimical to the common defense and security.

This subsequent arrangement will take effect no sooner than fifteen days after the date of publication of this notice.

Dated: July 12, 1984.

For the Department of Energy.

John R. Brodman,

Acting Deputy Assistant Secretary for International Affairs.

[FR Doc. 84-16936 Filed 7-17-84; 8:45 am]

BILLING CODE 6450-01-M

Economic Regulatory Administration

Issuance of Proposed Order of Disallowance to Murphy Oil Corporation and Opportunity for Objection

AGENCY: Economic Regulatory Administration, Energy.

ACTION: Notice.

SUMMARY: Murphy Oil Corporation ("Murphy") of El Dorado, Arkansas is a major refiner engaged in the production and refining of crude oil, and the marketing of petroleum products. Murphy was therefore subject to the Mandatory Petroleum Price and Allocation Regulations which were in effect through January 27, 1981.

The Office of Special Counsel ("OSC") of the Economic Regulatory Administration of the Department of Energy ("DOE") conducted an audit of Murphy and determined that the firm violated certain of these regulations during 1979.

Pursuant to 10 CFR 205.192, OSC hereby gives notice of a Proposed Order of Disallowance ("POD") issued to Murphy and of an opportunity for objection thereto.

FOR FURTHER INFORMATION CONTACT: Ann C. Grover, Associate Solicitor, Economic Regulatory Administration, Department of Energy, Room 3H-049, 1000 Independence Avenue SW., Washington, D.C. 20585, (202) 252-4387.

Copies of the POD with confidential information deleted may be obtained from the Department of Energy, Freedom of Information Reading Room, Forrestal Building, Room 1E-190, 1000 Independence Avenue SW., Washington, D.C. 20585.

SUPPLEMENTARY INFORMATION:

I. Issuance of Proposed Order of Disallowance

In 1979, Murphy reported transactions between affiliated entities in which it imported crude oil originating from countries where it lifted equity crude oil or received crude oil on a preferential basis, or imported crude oil received in exchange for such crude oil. Costs claimed in these transactions are subject to disallowance where Murphy's weighted average (by volume) costs of all crude oil of the same type exceeds the DOE's maximum price for the crude type in the month.

As a result of its audit, OSC determined that Murphy overstated its costs by $39,452,940.75. As a remedy for this violation, the POD states that Murphy's costs should be disallowed by the amounts which exceed DOE's representative prices in the months in which the costs were incurred and that Murphy should recalculate its costs and make refunds of any resulting overcharges, plus interest.

II. Notice of Objection

In accordance with 10 CFR 205.193, any aggrieved person may file a Notice of Objection to the above described POD with DOE's Office of Hearings and Appeals within 15 days after the date of this publication. A person who fails to file a Notice of Objection shall be deemed to have admitted the findings of fact and conclusions of law stated in the POD. If a Notice of Objection is not filed in accordance with § 205.193, the POD may be issued as a final Order of Disallowance.

All Notices of Objection, Statements of Objections, Responses, Replies, Motions, and other documents required to be filed with the Office of Hearings and Appeals shall be sent to: Office of Hearings and Appeals, Department of Energy, Room 6F-055, 1000 Independence Avenue SW., Washington, D.C. 20585.

No confidential information shall be included in a Notice of Objection.

Copies of all Notices of Objection, Statements of Objections and all other pleadings filed by an aggrieved person or other participant shall be served on: Ann C. Grover, Associate Solicitor, Economic Regulatory Administration, Department of Energy, Room 3H-049, 1000 Independence Avenue SW., Washington, D.C. 20585.

Issued in Washington, D.C., July 3, 1984.

Milton C. Lorenz,

Special Counsel, Economic Regulatory Administration.

[FR Doc. 84-16933 Filed 7-17-84; 8:45 am]

BILLING CODE 6450-01-M

Federal Energy Regulatory Commission

[Docket No. TA84-2-61-000]

Bayou Interstate Pipeline Corp.; Filing

July 12, 1984.

Take notice that Bayou Interstate Pipeline Corp. (Bayou), on July 2, 1984 tendered for filing Second Substitute Original Sheet No. 4A and First Revised Sheet No. 5 of its FERC Gas Tariff, Original Volume No. 1. The tariff sheets were filed pursuant to the Purchased Gas Cost Adjustment and Incremental Pricing Adjustment provisions contained in Sections 15 and 16 of Bayou's tariff.

Copies of the filing were served upon Bayou's jurisdictional customer and interested state regulatory commission.

Any person desiring to be heard or to protest said filing should file a motion to intervene or protest with the Federal Energy Regulatory Commission, 825 North Capitol Street, NE., Washington, D.C. 20426, in accordance with Rules 211 and 214 of the Commission's rules of practice and procedure (18 CFR 385.211, 385.214). All such motions or protests should be filed on or before July 19, 1984. Protests will be considered by the Commission in determining the appropriate action to be taken, but will not serve to make protestants parties to

the proceeding. Any person wishing to become a party must file a motion to intervene. Copies of this filing are on file with the Commission and are available for public inspection.

Kenneth F. Plumb,

Secretary.

[FR Doc. 84-18937 Filed 7-17-84; 8:45 am]

BILLING CODE 6717-01-M

[Docket No. CP84-533-000]

Columbia Gas Transmission Corp., Complainant, and Transcontinental Gas Pipe Line Corp., Respondent; Complaint and Request for Hearing

July 12, 1984.

Take notice that on June 29, 1984, Columbia Gas Transmission Corporation (Columbia), P.O. Box 1273, Charleston, West Virginia 25325, filed in Docket No. CP84-533-000 pursuant to Rule 206 of the Rules of Practice and Procedure (18 CFR 385.206) of the Federal Energy Regulatory Commission a complaint and request for formal hearing with respect to the construction of certain natural gas facilities and the use thereof for the purpose of providing transportation services by Transcontinental Gas Pipe Line Corporation (Transco) on behalf of one of Columbia's wholesale customers, Baltimore Gas & Electric Company (BG&E), all as more fully set forth in the complaint which is on file with the Commission and open to public inspection.

Columbia states that in June of this year, Columbia personnel observed the construction of facilities connecting Transco's system with BG&E's system at a point near the existing interconnection between the facilities of Transco and Columbia at Beaver Dam in Baltimore County, Maryland. Columbia states the facilities were being installed to permit Transco to deliver natural gas to BG&E. Columbia is BG&E's sole supplier of natural gas, it is explained.

Columbia states that on June 19, 1984, it sent a telex advising the Commission of the facts of this situation and requested an investigation into this matter to determine whether the construction and operation of the facilities were lawful and consistent with the public interest.

Columbia states that on June 21, 1984, Transco responded to Columbia's telex and states that Transco would use the facilities to transport up to 80,000 mcf per day of natural gas purchased by BG&E from Caliche Pipeline Company. Transco would transport such gas under Part 284 of the Commission's Regulations and section 311(a)(1) of the Natural Gas Policy Act of 1978 (NGPA). Columbia claims that Transco asserts that Commission authorization is not required to construct and operate the subject interconnection facilities because the Natural Gas Act does not apply to facilities used solely for transportation of natural gas under section 311(a) of the NGPA.

Columbia states that through the use of these facilities Transco intends to transport up to 80,000 Mcf per day to one of Columbia's core market coustomers, which volumes would directly displace sales which otherwise would be made by Columbia. It is stated that this type of activity reveals a major regulatory loophole that can be exploited at the expense of existing core markets. Columbia states that the loophole at issue is § 284.3(c) of the Commission's Regulations (18 CFR 284.3(c)) which appears to permit an interstate pipeline to construct with local distribution companies not previously served by the interstate pipeline. Columbia states that unless this loophole is closed, the way is clear for the invasion of core markets on a virtually unlimited basis.

Columbia requests that the Commission issue an order directing Transco to refrain from using these facilities until the Commission has had an opportunity to review the transportation services referenced in Transco's June 21, 1984, letter to the Commission. Columbia further requests that the Commission set this matter for expedited hearing.

Any person desiring to be heard or to make any protest with reference to said compliant should on or before August 11, 1984, file with the Federal Energy Regulatory Commission, Washington, D.C. 20426, a motion to intervene or a protest in accordance with the requirements of the Commission's Rules of Practice and Procedure (18 CFR 385.214 or 385.211). All protests filed with the Commission will be considered by it in determining the appropriate action to be taken but will not serve to make the protestants parties to the proceeding. Any person wishing to become a party to a proceeding or to participate as a party in any hearing therein must file a motion to intervene in accordance with the Commision's Rules.

Kenneth F. Plumb,

Secretary.

[FR Doc. 84-18989 Filed 7-17-84; 8:45 am]

BILLING CODE 6717-01-M

[Docket No. ER84-515-000]

Connecticut Light & Power Co., Filing

July 12, 1984.

The filing Company submits the following:

Take notice that on June 26, 1984, Connecticut Light and Power Company (CL&P) tendered for filing as an initial rate schedule an agreement (the Agreement) between CL&P, Western Massachusetts Electric Company (WMECO, and together with CL&P, the NU Companies) and Delmarva Power & Light Company (Delmarva). The Agreement, dated as of May 1, 1984, provides for the bilateral sale by the NU Companies or Delmarva of energy from their systems ("system energy") that may be available on a daily or weekly basis (a "transaction"). CL&P states that the timing of transactions cannot be accurately estimated but that the NU Companies or Delmarva would offer to sell system energy to the other only when it was economical to do so.

CL&P states that the buyer will pay an energy reservation charge to the seller for each transaction in an amount equal to the megawatthours of system energy reserved for the buyer by the seller during a transaction multiplied by an energy reservation charge rate negotiated prior to each transaction. The buyer will pay an energy charge for each transaction in an amount equal to the megawatthours delivered by the seller during such transaction times an energy charge rate. The energy charge rate is the weighted average forecasted energy charge rate for tenerating unit(s) which the seller determines to be available to provide such energy at the time of a transaction.

CL&P requests an effective date of May 1, 1984, and therefore requests waiver of the Commission's notice requirements.

Copies of this filing have been served upon WMECO and by Delmarva.

Any person desiring to be heard or to protest said filing should file a motion to intervene or protest with the Federal Energy Regulatory Commission, 825 North Capitol Street NE., Washington, D.C. 20426, in accordance with Rules 211 and 214 of the Commission's Rules of Practice and Procedure (18 CFR sections 385.211, 385.214). All such motions or protests should be filed on or before July 20, 1984. Protests will be considered by the Commission in determining the appropriate action to be taken, but will not serve to make protestants parties to the proceeding. Any person wishing to become a party must file a motion to intervene. Copies of this filing are on file

with the Commission and are available for public inspection.

Kenneth F. Plumb,

Secretary.

[FR Doc. 84-18988 Filed 7-17-84; 8:45 am]

BILLING CODE 6717-01-M

[Docket No. ER84-512-000]

Duke Power Co., Filing

July 12, 1984.

The filing Company submits the following:

Take notice that on June 25, 1984, Duke Power Company (Duke) tendered for filing a supplement to the Company's Electric Power Contract with the City of Greenwood. Duke states that this contract is on file with the Commission and has been designated Duke Power Company Rate Schedule No. 250.

Duke further states that the Company's contract supplement, made at the request of the customer and with agreement obtained from the customer, provides for the following changes in contract demand: Delivery Point No. 1 from 13,500 to 16,500 KW and Delivery Point No. 2 from 13,000 KW to 12,100 KW.

Duke indicates that this supplement also includes an estimate of sales and revenue for twelve months immediately preceding and for the twelve months immediately succeeding the effective date. Duke proposes an effective date of June 19, 1984.

According to Duke copies of this filing were mailed to the City of Greenwood and the South Carolina public Service Commission.

Any person desiring to be heard or to protest said filing should file a motion to intervene or protest with the Federal Energy Regulatory Commission, 825 North Capitol Street NE., Washington, D.C. 20426, in accordance with Rules 211 and 214 of the Commission's Rules of Practice and Procedure (18 CFR 385.211, 385.214). All such motions or protests should be filed on or before July 20, 1984. Protests will be considered by the Commission in determining the appropriate action to be taken, but will not serve to make protestants parties to the proceeding. Any person wishing to become a party must file a motion to intervene. Copies of this filing are on file with the Commission and are available for public inspection.

Kenneth F. Plumb,

Secretary.

[FR Doc. 84-18990 Filed 7-17-84 8:45 am]

BILLING CODE 6717-01-M

[Docket No. GP84-40-000]

Mineral Resources, Inc., et al.; Petition for Declaratory Order

Issued: July 12, 1984.

On June 5, 1984, Mineral Resources, Inc. (MRI), Paul Dauer, Alvin James Dauer, Viola Coffee, Ruth Brooks, Johnnie Mae Whitehead, Betty Joyce Meyer, Peggy Ann Dennis, Billie Louise Cooper, LaDonna Walters, and Jerry O'Neal (referred to jointly as MRI, *et al.*) filed a petition for declaratory order with the Federal Energy Regulatory Commission (Commission) under § 1.7 of the Commission's Rules of Practice and Procedure.[1] MRI, *et al.* seeks a Commission finding that certain natural gas production is subject and entitled to the maximum lawful price under section 109 of the Natural Gas Policy Act of 1978 (NGPA).[2]

MRI, *et al.* submits the following in support of its position. This petition arose from the holding of the United States District Court for the Northern District of Texas, Amarillo Division, that certain leases expired by their own terms on September 26, 1972.[3] Thus, the interest of the lessee, Natural Gas Pipeline Company of America (NGPL), in those leases also terminated. The court held that the plaintiffs[4] were entitled to damages based on "the amount of natural gas converted since June 4, 1979 multiplied by the maximum lawful price for the converted gas at the time of conversion." The court left the issue of whether the natural gas at issue was dedicated or committed to interstate commerce for determination by the Commission. The parties agreed by court order to refer the case to the Commission to determine the applicable maximum lawful price under the NGPA for the subject gas.

On August 18, 1981, MRI became the lessee of the natural gas lease at issue.[5] MRI claims that the subject gas is eligible for section 109 rates.

MRI, *et al.* states that on September 26, 1922, A.J. Dauer and his wife executed a 50-year lease to Gulf Production Company covering the subject lands. The gas rights passed from Texoma Natural Gas Company to NGPL by assignment dated August 14, 1931. No other contract was entered for the sale of natural gas from the subject lease. Neither the Federal Power Commission nor this Commission issued a certificate of public convenience and necessity with respect to the subject lease. Thus, MRI, *et al.* asserts that the production from the subject lease was not committed or dedicated into interstate commerce. MRI, *et al.* asserts that that fact coupled with the fact that the gas was not subject to an existing contract on the day before the date of the enactment of the NGPA qualifies the gas volumes in issue for section 109 rates under the NGPA. MRI, *et al.* also contends that the facts of its case fit the exclusion to the "committed or dedicated to interstate commerce" definition in section 2(18)(B)(iii) of the NGPA.

Any person who desires to be heard or to make any protest to this complaint should file, within 30 days after notice is published in the Federal Register, with the Federal Energy Regulatory Commission, 825 N. Capitol Street NE., Washington, D.C. 20426, a motion to intervene or a protest in accordance with the requirements of Rules 211 or 214 of the Commission's Rules of Practice and Procedure. All protests filed will be considered but will not make the protestants parties to the proceeding.

Kenneth F. Plumb,

Secretary.

[FR Doc. 84-18991 Filed 7-17-84; 8:45 am]

BILLING CODE 6717-01-M

[1] On August 26, 1982, the Commission's Revised Rules of Practice and Procedure became effective. 18 CFR Part 385. Section 1.7 is now found in § 385.207 (Rule 207) of the Commission's Rules of Practice and Procedure, 18 CFR 385.207, 47 FR 19,025 (May 3, 1982).

[2] 15 U.S.C. 3301-3432 (1983).

[3] Civil Action No. CA-2-81-118.

[4] The petitioners in this docket are the same as the plaintiffs except that Gladys O'Neal, decedent, is replaced by her five children, Betty Joyce Meyer, Peggy Ann Dennis, Billie Louise Cooper, LaDonna Walters and Jerry O'Neal. *See* Errata filed in this docket on July 5, 1984. All the petitioners and/or plaintiffs are reversionary landowners of the land from which the subject gas was and is produced. MRI is an intervenor in the civil action.

[5] North half (N/2) in the Southeast Quarter (SE/4) of Survey No. 74; East One-half (E/2) and East One-half of West One-half (E/2 W/2) and Southwest Quarter of Northwest Quarter (SW/4 NW/4) of Survey No. 61; East One-half (E/2) and Northwest Quarter (NW/4) and East One-half of Southwest Quarter (E/2 SW/4) of Survey No. 82; all in Block Four (No. 4) of I&G N Ry. Co. lands, Carson County, Texas.

[Docket No. G-12340-000, et al.]

Mobil Oil Corp., et al.; Applications for Certificates, Abandonments of Service and Petitions To Amend Certificates [1]

July 12, 1984.

Take notice that each of the Applicants listed herein has filed an

[1] This notice does not provide for consolidation for hearing of the several matters covered herein.

application or petition pursuant to Section 7 of the Natural Gas Act for authorization to sell natural gas in interstate commerce or to abandon service as described herein, all as more fully described in the respective applications and amendments which are on file with the Commission and open to public inspection.

Any person desiring to be heard or to make any protest with reference to said applications should on or before July 30, 1984, file with the Federal Energy Regulatory Commission, Washington, D.C. 20426, petitions to intervene or protests in accordance with the requirements of the Commission's Rules of Practice and Procedure (18 CFR 385.211, 385.214). All protests filed with the Commission will be considered by it in determining the appropriate action to be taken but will not serve to make the protestants parties to the proceeding. Persons wishing to become parties to a proceeding or to participate as a party in any hearing therein must file petitions to intervene in accordance with the Commission's Rules.

Under the procedure herein provided for, unless otherwise advised, it will be unnecessary for Applicants to appear or to be represented at the hearing.

Kenneth F. Plumb,
Secretary.

Docket No. and date filed	Applicant	Purchaser and location	Price per 1,000 ft³	Pressure base
G-12840-000, D, June 25, 1984	Mobil Oil Corporation, Nine Greenway Plaza, Suite 2700, Houston, Texas 77046.	Colorado Interstate Gas Company, Mocane Field, Beaver County, Oklahoma.	(1)	
G-19284-004, E, June 25, 1984	Phillips Petroleum Company (successor in interest to Phillips Oil Company), 336 HS&L Building, Bartlesville, Oklahoma 74004.	United Gas Pipe Line Company, Valentine Field, LaFourche Parish, Louisiana.	(2)	14.73
G-19313-000, E, June 25, 1984	do	Columbia Gas Transmission Corporation, Duson Field, Lafayette County, Louisiana.	(3)	14.73
CI61-126-000, E, June 25, 1984	do	Southern Natural Gas Company, Montegut Field, Terrebonne & LaFourche Parishes, Louisiana.	(4)	14.73
CI62-538-001, E, June 26, 1984	do	Columbia Gas Transmission Corporation, North Crowley Field, Acadia Parish, Louisiana.	(5)	14.73
CI65-343-001, E, June 28, 1984	do	ANR Pipe Line Company, Jeanerette Field, St. Mary Parish, Louisiana.	(6)	14.73
CI67-1603-003, E	do	United Gas Pipe Line Company, Bayou St. Vincent Field, Assumption Parish, Louisiana.	(7)	14.73
CI84-3-001, E, June 13, 1984	do	Arkansas Louisiana Gas Company, Ivan Field, Bossier Parish, Louisiana.	(8)	14.73
CI84-404-000 (CI68-1348), B, May 3, 1984.	Mobil Producing Texas & New Mexico Inc., Nine Greenway Plaza, Suite 2700, Houston, Texas 77046.	Texas Eastern Transmission Corporation, Waskom Field, Panola and Harrison Counties, Texas.	(9)	
CI84-460-000 (CI78-1181), B, June 21, 1984.	Terra Resources, Inc., P.O. Box 2329, Tulsa, Oklahoma 74101.	Southern Natual Gas Co., Breton Sound Block 20 Field, Plaquemines Parish, Louisiana.	(10)	
CI84-461-000 (CI78-149), B, June 21, 1984.	Sun Exploration and Production Company, P.O Box 2880, Dallas, Texas 75221-2880.	Transcontinental Gas Pipe Line Corporation, Bear Field, Beauregard Parish, Louisiana.	(11)	
CI84-462-000, B, June 21, 1984	W.S. Robertson, Trustee for Anne R. Meier, 5151 San Felipe, P.O. Box 4587, Houston, Texas 77210.	Sohio Petroleum Company, East Washington Field, McClain County, Oklahoma.	(12)	
CI84-464-000 (CI67-1357), B, June 25, 1984.	Getty Oil Company, P.O. Box 1404, Houston, Texas 77001.	Texas Gas Transmission Company, North Bosco Field, Acadia Parish, Louisiana.	(13)	
CI84-463-000, B	Delta Drilling Company	Consolidated Gas Transmission Company, Brady Field, Clearfield County, Pennsylavania.	(14)	
CI84-466-000, E, June 28, 1984	Plains Production Company (successor in interest to KN), 12055 West Second Place, Lakewood, Colorado 80228.	KN Energy Inc., various field in Big Horn & Sweetwater Counties, Wyoming.	(15)	14.73
CI84-467-000, E, June 28, 1984	do	KN Energy, Inc., Camrick, Dombrey, & Guymon-Hugoton Fields, Texas & Beaver Countnes, Oklahoma.	(15)	14.73
CI84-468-000, E, June 28, 1984	do	KN Energy Inc., Flat Top Field, Converse County, Wyoming.	(15)	14.73
CI84-469-000, E, June 28, 1984	do	KN Energy Inc., Wayne, Enlow & Zook Fields, Pawnee & Edwards Counties, Kansas.	(15)	14.73
CI84-470-000, E, June 28, 1984	do	KN Energy Inc. Bradshaw Field, Hamilton, County, Kansas.	(15)	14.73
CI84-471-000, E, June 28, 1984	do	KN Energy Inc., various fields in Hemphill and Wheeler Counties, Texas.	(15)	14.73
CI84-472-000, E, June 28, 1984	do	KN Energy Inc., Reydon West Field, Roger Mills, Custer & Washita Counties, Oklahoma.	(15)	14.73
CI84-473-000, E, June 28, 1984	do	KN Energy Inc., Panoma Council Grove & Hugoton Fields, Various Counties, Kansas.	(15)	14.73
CI84-474-000, E, June 28, 1984	do	KN Energy Inc., Various Niobrara Fields, Yuma Co., Colorado, Sherman & Chevenne Counties, Kansas.	(15)	14.73
G-6342-007, D, July 2, 1984	Conoco, Inc., P.O. Box 2197, Houston, Texas 77252.	El Paso Natural Gas Company, Monument Area, Lea County, New Mexico.	(16)	
G-12070-000, June 25, 1984	Mobil Producing Texas & New Mexico Inc., Nine Greenway Plaza, Suite 2700, Houston, Texas 77046.	El Paso Natural Gas Company, Levelland Field, Cochran and Hockley Counties, Texas.	(17)	14.73
CI63-304-001, E, July 3, 1984	Phillips Petroleum Company (successor in interest to Phillips Oil Company), 336 HS&L Building, Bartlesville, Oklahoma 74004.	Tennessee Gas Pipeline Company, N. E. Loma Novia Field, Duval County, Texas.	(18)	14.73
CI63-1300-001 June 21, 1984	Mobil Oil Corporation, Nine Greenway Plaza, Suite 2700, Houston, Texas 77046.	Natural Gas Pipeline Company of America, West Crane and Putnam Fields, Dewey and Custer Counties, Oklahoma.	(17)	14.65
CI75-480-002, D, July 2, 1984	Mobil Producing Texas & New Mexico Inc., Nine Greenway Plaza, Suite 2700, Houston, Texas 77046.	United Gas Pipe Line Company, Bethany Field, Panola County, Texas.	(19)	
CI78-1186-001, D, July 2, 1984	do	United Gas Pipe Line Company, Carthage Field, Panola County, Texas.	(20)	
CI82-405-001, E, July 3, 1984	Phillips Petroleum Company (successor in interest to Phillips Oil Company), 336 HS&L Building, Bartlesville, Oklahoma 74004.	Tennessee Gas Pipeline Company, Eugene Island Block 24, Offshore Louisiana.	(21)	14.73
CI84-465-000, E, June 28, 1984	MCOR Oil Development Inc. (sucessor in interest to Ada Oil Exploration Corporation and Ada Land Company), 5718 Westheimer, Houston, Texas 77057.	Columbia Gas Transmission Corporation, Duson Field, Lafayette Parish, Louisiana.	(22)	15.025

Docket No. and date filed	Applicant	Purchaser and location	Price per 1,000 ft³	Pressure base
CI84-475-000, E, June 29, 1984	Sun Exploration and Production Company (successor in interest to Petro-Lewis Corporation), P.O. Box 2880, Dallas, Texas 75221-2880.	TrunkLine Gas Company and Clark Oil Producing Company, West Cameron Block 639, Offshore Louisiana.	(23)	15.025
CI84-476-000, E, June 29, 1984	do	TrunkLine Gas Company and Clark Oil Producing Company, East Cameron Block 333, Offshore Louisiana.	(23)	15.025
CI84-477-000 (CI78-141), B, July 2, 1984.	Getty Oil Company, P.O. Box 1404, Houston, Texas 77001.	Transcontinental Gas Pipe Line Company, Rice Bayou Field, Terrebonne Parish, Louisiana.	(24)	

[1] By assignment effective September 22, 1983, Mobil assigned to Midco Drilling Inc. all of its rights, title and interest in and to that acreage.
[2] Effective December 1, 1983, Phillips Oil Company assigned to Phillips Petroleum Company, its interest in the Valentine Field, LaFourche Parish, Louisiana.
[3] Effective December 1, 1983, Phillips Oil Company assigned to Phillips Petroleum Company, its interest in the Duncan Field, Lafayette Parish, Louisiana.
[4] Effective December 1, 1983, Phillips Oil Company assigned to Applicant, its working interest in the Tex W4 RA SUB, Tex W4 RC SUA, Tex WSU RES Wide, and the TEX W3 RA SUA located in the Montegut Field, Terrebonne and LaFourche Parishes, Louisiana.
[5] Effective December 1, 1983, Phillips Oil Company assigned to Applicant its interest in the Hamann Res P SUA, located in the North Crowley Field, Acadia Parish, Louisiana.
[6] Effective December 1, 1983, Phillips Oil Company assigned to Applicant its interest in the Jeanerette Field, St. Mary Parish, Louisiana.
[7] Effective December 1, 1983, Phillips Oil Company assigned to Applicant its interest in the Bayou St. Vincent Field, Assumption Parish, Louisiana.
[8] Effective December 1, 1983, Phillips Oil Company assigned to Applicant its interest in the NE/4 & E/2, NW/2, NW/4 of Section 35, T21N, R11W, Bossier Parish, Louisiana.
[9] By assignment and Bill of Sale dated June 20, 1983, to be effective May 1, 1983, Mobil Producing Texas & New Mexico Inc. assigned to Bert Fields, Jr., Small Producer No. 006311 in Docket No. CS68-0122 a certain lease and said assignment.
[10] The only two producing wells under this GRS, State Lease 6902 No. 1 9707' RA SU A and State Lease 6902, No. 45 9707' RA SU B, both qualified as NGPA Sec. 102 as final 1-16-73. Therefore, no Natural Gas Act gas was ever sold under Terra's GRS No. 57. Any future drilling will qualify as NGPA gas by virtue of spud date. State Lease 6902 No. 1 was plugged and abandoned August 6, 1981.
[11] Due to depletion of gas reserves, the unit well was plugged and abandoned, the leases expired, and the contract has terminated.
[12] Percentage sale to Sohio being abandoned because the Plant became uneconomic. Will sell gas which was previously sold to Sohio for processing, with residue gas going to Lone Star, under a September 1, 1980, ratification of Sohio Contract with Lone Star dated February 18, 1965 as amended by amendment dated August 1, 1980, such ratification having been filed as a supplement to Sohio Rate Schedule No. 117. The certificate application by Sohio dated April 22, 1975, and amended by amendment to certificate filing date October 28, 1982 will cover our sale.
[13] The last well on this lease, the A. Meche No. 1, was plugged and abandoned on August 23, 1981. There are no plans for future development.
[14] Uneconomic operations.
[15] Applicant is filing for total successor in interest to KN under the April 20, 1984 contract.
[16] The Lockhart A-30 No. 5 well was reclassified from a gas well to an oil well.
[17] Applicant is filing to change in delivery points.
[18] Effective December 1, 1983, Phillips Oil Company assigned to Applicant, its working interest in the Walder, Kaplan, and Mayer leases, located in the N.E. Loma Novia Field, Duval County, Texas.
[19] By amendment dated February 10, 1984, to said contract, United Gas Pipe Line Company agreed with Mobil Producing Texas & New Mexico Inc. to release from the terms and conditions of said contract that portion of gas deliverable from the wells.
[20] Not used.
[21] Effective December 1, 1983, Phillips Oil Company assigned to Applicant its working interest in the OCS-G-2020, Eugene Island Block 24, Offshore Louisiana.
[22] By Assignment and Conveyance effective July 1, 1980, Ada Land, joined by Ada Exco, conveyed all their right, title and interest in the leases dedicated under the April 2, 1980 contract to MCOR.
[23] Assignment and Conveyance effective May 1, 1984, Petro-Lewis Corporation conveyed to Sun Exploration and Production Company its interest in the said acreages.
[24] Per terms of Farmout Agreement and Assignment, the acreage has been assigned to Forman Petroleum Corporation on May 4, 1984. Forman is covering the sale under their Docket No. CS74-383.

Filing Code: A—Initial Service, B—Abandonment, C—Amendment to add acreage, D—Amendment to delete acreage, E—Total Succession, F—Partial Succession.

[FR Doc. 84-18392 Filed 7-17-84; 8:45 am]

BILLING CODE 6717-01-M

[Docket No. ER84-514-000]

Pacific Power & Light Co.; Filing

July 12, 1984.

The filing Company submits the following:

Take notice that on June 25, 1984, Pacific Power & Light Company (Pacific) tendered for filing a Revised Exhibit B, dated October 1, 1983, to Pacific's Rate Schedule FERC No. 213. Rate Schedule FERC No. 213 provides for the transfer of Deseret Generation & Transmission Co-operative (Deseret) power and energy to Bridger Valley Electric Association, Inc. (Bridger Valley) Blacksfork Substation by Pacific.

Pacific states that each year a Revised Exhibit B is submitted by Deseret and Bridger Valley to Pacific in accordance with Article 12(ii) of the May 29, 1981 Transmission Agreement.

Copies of the filing were supplied to Deseret, Bridger Valley, and the Public Service Commission of the State of Wyoming.

Any person desiring to be heard or to protest said filing should file a motion to intervene or protest with the Federal Energy Regulatory Commission, 825 North Capitol Street NE., Washington, D.C. 20426, in accordance with Rules 211 and 214 of the Commission's Rules of Practice and Procedure (18 CFR 385.211, 385.214). All such motions or protests should be filed on or before July 20, 1984. Protests will be considered by the Commission in determining the appropriate action to be taken, but will not serve to make protestants parties to the proceeding. Any person wishing to become a party must file a motion to intervene. Copies of this filing are on file with the Commission and are available for public inspection.

Kenneth F. Plumb,

Secretary.

[FR Doc. 84-18393 Filed 7-17-84; 8:45 am]

BILLING CODE 6717-01-M

[Docket No. ER84-513-000]

Tampa Electric Co.; Filing

July 12, 1984.

The filing Company submits the following:

Take notice that on June 25, 1984, Tampa Electric Company (Tampa) tendered for filing an Agreement for Interchange Service between Tampa and the City of Starke, Florida (Starke), together with Service Schedule A, B, C, D, and X thereunder.

Tampa states that Service Schedules A, B, C, D, and X provide for emergency, scheduled, (short-term) economy, firm, and extended economy interchange service, respectively, between Tampa and Starke.

Tampa requests an effective date of June 1, 1984, and therefore requests waiver of the Commission's notice requirements.

Copies of this filing were served upon Starke and the Florida Public Service Commission.

Any person desiring to be heard or to protest said filing should file a motion to intervene or protest with the Federal Energy Regulatory Commission, 825 North Capitol Street NE., Washington, D.C. 20426, in accordance with Rules 211 and 214 of the Commission's Rules of Practice and Procedure (18 CFR 385.211, 385.214). All such motions or protests should be filed on or before July 20, 1984. Protests will be considered by the Commission in determining the appropriate action to be taken, but will not serve to make protestants parties to the proceeding. Any person wishing to become a party must file a motion to intervene. Copies of this filing are on file with the Commission and are available for public inspection.

Kenneth F. Plumb,

Secretary.

[FR Doc. 84-18394 Filed 7-17-84; 8:45 am]

BILLING CODE 6717-01-M

[Docket No. ER84-516-000]

Tampa Electric Co., Filing

July 12, 1984.

The filing Company submits the following:

Take notice that on June 26, 1984, Tampa Electric Company (Tampa) tendered for filing Service Schedule X providing for extending economy interchange service between Tampa and Florida Power Corporation (Florida Power). Tampa states that Service Schedule X is submitted for inclusion as a supplement under the existing contract for interchange service between Tampa and Florida Power, designated as Tampa's Rate Schedule FPC No. 6, and Florida Power's Rate Schedule FPC No. 80. Tampa's filing includes a Certificate of Concurrence submitted by Florida Power in lieu of an independent filing.

Tampa proposes an effective date of June 1, 1984, and therefore requests waiver of the Commission's notice requirements.

Copies of this filing have been served upon Florida Power and the Florida Public Service Commission.

Any person desiring to be heard or to protest said filing should file a motion to intervene or protest with the Federal Energy Regulatory Commission, 825 North Capitol Street, NE., Washington, D.C. 20426, in accordance with Rules 211 and 214 of the Commission's Rules of Practice and Procedure (18 CFR 385.211, 385.214). All such motions or protests should be filed on or before July 20, 1984. Protests will be considered by the Commission in determining the appropriate action to be taken, but will not serve to make protestants parties to the proceeding. Any person wishing to become a party must file a motion to intervene. Copies of this filing are on file with the Commission and are available for public inspection.

Kenneth F. Plumb,

Secretary.

[FR Doc. 84-18995 Filed 7-17-84; 8:45 am]

BILLING CODE 6717-01-M

[Docket No. ER84-517-000]

Utah Power & Light Co., Filing

July 12, 1984.

The filing Company submits the following:

Take notice that on June 27, 1984, Utah Power & Light Company (Utah) tendered for filing an Agreement for firm transmission service between Utah and the City of Hurricane, Utah, dated April 27, 1982.

Utah states that for a number of years, this "Wheeling" service was performed by CP National (CPN). Since Utah has acquired the CPN properties, this Contract provides for a continuation of the same service under the same rates, terms and conditions.

Utah requests an effective date of April 27, 1982, and therefore requests waiver of the Commission's notice requirements.

A copy of the filing was served on the City of Hurricane, Utah.

Any person desiring to be heard or to protest said filing should file a motion to intervene or protest with the Federal Energy Regulatory Commission, 825 North Capitol Street, NE., Washington, D.C. 20426, in accordance with Rules 211 and 214 of the Commission's Rules of Practice and Procedure (18 CFR 385.211, 385.214). All such motions or protests should be filed on or before July 20, 1984. Protests will be considered by the Commission in determining the appropriate action to be taken, but will not serve to make protestants parties to the proceeding. Any person wishing to become a party must file a motion to intervene. Copies of this filing are on file with the Commission and are available for public inspection.

Kenneth F. Plumb,

Secretary.

[FR Doc. 84-18996 Filed 7-17-84; 8:45 am]

BILLING CODE 6717-01-M

ENVIRONMENTAL PROTECTION AGENCY

[OPP-30242; FRL-2628-5]

ICI Americas Inc., Application To Register a Pesticide Product

AGENCY: Environmental Protection Agency (EPA).

ACTION: Notice.

SUMMARY: This notice announces receipt of an application to conditionally register a pesticide product containing an active ingredient not included in any previously registered product pursuant to the provisions of section 3(c)(4) of the Federal Insecticide, Fungicide, and Rodenticide Act (FIFRA), as amended.

DATE: Comment by August 17, 1984.

ADDRESS: By mail submit comments identified by the document control number [OPP-30242] and the file number (10182-IG), to: Information Services Section (TS-757C), Program Management and Support Division, Attn: Product Manager (PM) 23, Office of Pesticide Programs, Environmental Protection Agency, 401 M St., SW., Washington, D.C. 20460.

In person, bring comments to: Rm. 236, CM No. 2, Attn: PM 23, Registration Division (TS-767C), Environmental Protection Agency, 1921 Jefferson Davis Highway, Arlington, VA.

Information submitted in any comment concerning this notice may be claimed confidential by marking any part or all of that information as "Confidential Business Information" (CBI). Information so marked will not be disclosed except in accordance with procedures set forth in 40 CFR Part 2. A copy of the comment that does not contain CBI must be submitted for inclusion in the public record. Information not marked confidential may be disclosed publicly by EPA without prior notice to the submitter. All written comments will be available for public inspection in Rm. 236 at the address given above, from 8 a.m. to 4 p.m., Monday through Friday, excluding legal holidays.

FOR FURTHER INFORMATION CONTACT: Richard Mountfort, PM 23 (703-557-1830).

SUPPLEMENTARY INFORMATION: ICI Americas Inc., Concord Pike and New Murphy Road, Wilmington, DE 19897, has submitted an application to EPA to conditionally register the herbicide product Flex™ 2LC Herbicide, EPA File Symbol 10182-IG, containing the active ingredient sodium salt of 5-[2-chloro-4-(trifluoromethyl)phenoxy]-*N*-(methylsulfonyl)-2-nitrobenzamide (fomesafen) at 21.7 percent, pursuant to the provisions of section 3(c)(4) of FIFRA. The application proposes that the product be classified for general use to control broadleaf weeds in soybeans. Notice of receipt of this application does not imply a decision by the Agency on the application.

Notice of approval or denial of an application to register a pesticide product will be announced in the Federal Register. The procedure for requesting data will be given in the Federal Register if an application is approved.

Comments received within the specified time period will be considered before a final decision is made; comments received after the time specified will be considered only to the extent possible without delaying processing of the application.

Written comments filed pursuant to this notice, will be available in the Program Management and Support Division (PMSD) office at the address provided from 8 a.m. to 4 p.m., Monday through Friday, except legal holidays. It is suggested that persons interested in reviewing the application file, telephone the PMSD office (703-557-3262), to ensure that the file is available on the date of intended visit.

(Sec. 3(c)(4) of FIFRA, as amended)

Dated: June 28, 1984.

Douglas D. Campt,

Director, Registration Division, Office of Pesticide Programs.

[FR Doc. 84-18599 Filed 7-17-84; 8:45 am]

BILLING CODE 6560-50-M

[OPP-66111; FRL-2628-6]

Certain Pesticide Products Intent To Cancel Registrations; Shell Chemical Co. Inc., et al.

AGENCY: Environmental Protection Agency (EPA).

ACTION: Notice.

SUMMARY: This notice lists the names of firms requesting voluntary cancellation of registration of their pesticide products in compliance with section 6(a)(1) of the Federal Insecticide, Fungicide, and Rodenticide Act (FIFRA) as amended. Distribution or sale of these products after the effective date of cancellation will be considered a violation of the Act unless continued registration is requested.

EFFECTIVE DATE: August 17, 1984.

ADDRESS: By mail, submit comments to: Information Services Section, Program Management and Support Division (TS-757C), Office of Pesticide Programs, Environmental Protection Agency. 401 M St., SW., Washington, D.C. 20460.

In person, bring comments to: Rm 236, CM No. 2, 1921 Jefferson Davis Highway, Arlington, VA.

Information submitted as a comment concerning this notice may be claimed confidential by marking any part or all of that information as "Confidential Business Information" (CBI). Information so marked will not be disclosed except in accordance with procedures set forth in 40 CFR Part 2. A copy of the comment that does not contain CBI must be submitted for inclusion in the public record. Information not marked confidential may be disclosed publicly by EPA without prior notice to the submitter. All written comments will be available for public inspection in Rm. 236 at the address given above, from 8 a.m. to 4 p.m., Monday through Friday, excluding legal holidays.

FOR FURTHER INFORMATION CONTACT: By mail: Lela Sykes, Registration Division (TS-767C), Office of Pesticide Programs, Environmental Protection Agency, 401 M St., SW., Washington, D.C. 20460.

Office location and telephone number: Rm. 718C, CM No. 2, 1921 Jefferson Davis Highway, Arlington, VA, (703-557-2126).

SUPPLEMENTARY INFORMATION: EPA has been advised by the following firms of their intent to voluntarily cancel registration of their pesticide products.

Registration No.	Product name	Registrant	Date registered
201-167	Planavin 75 Herbicide wettable powder	Shell Chemical Co., Suite 200, 1025 Connecticut Ave., NW., Washington, DC 20036.	Apr. 5,1976.
201-218	Technical Planavin Herbicide for manufacturing purpose only	do	Apr. 26, 1967.
201-239	Planavin 4 water dispersible liquid herbicide	do	Apr. 29,1983.
201-276	Shell Planavin 75 Herbicide wettable powder	do	Sept. 1, 1971.
239-2031	Chevron Ortho Endrin 1.6 emulsion	Chevron Chemical Co., Ortho Division, 940 Hensley St., Richmond, CA 94804	Oct. 23, 1964.
299-125	Martin's household ant and roach bomb	C.J. Martin Co., P.O. Box 1033, Nacogdoches, TX 75961	July 23, 1957.
524-86	Vegadex	Monsanto Co., 1101 17th St., NW., Suite 604, Washington, DC 20036	Dec. 10, 1956.
524-113	Vegadex granular	do	July 5, 1978.
524-309	Vegadex technical	do	Aug. 23, 1974.
538-32	Scotts super clout	O.M. Scott and Sons Co., Marysville, OH 43041	Apr. 2, 1965.
541-198	Puritan No. 4107 residual insecticide	Puritan/Churchill Chemical Co., P.O. Box 83247, Martech Station, Atlanta, GA 30318.	Nov. 12, 1963.
595-315	Haviland PB treater	Haviland Agricultural Chemical Co., 1845 Sterling, NW., Grand Rapids, MI 49504.	July. 23, 1971.
635-570	E-Z Flo Herban 62 (cotton herbicide)	Grower Service Corp., P.O. Box 16037, Lansing, MI 48901	Sept. 21, 1967.
655-334	Prentox (R) G.V. concentrate	Prentice Drug and Chemical Co., Inc., C.B. 2000, 21 Vernon St., Floral Park, NY 11001.	Dec. 3, 1958.
655-472	Prentox Ronnel 24E insecticide	do	June 14, 1973.
655-606	Prentox formaldehyde solution	do	Dec. 6, 1973.
655-608	Prentox RX special bug killer residual and contact spray	do	Dec. 6, 1973.
861-69	Cadillac insect spray	Uncle Sam Chemical Co., Inc., 573-577 West 131st St., New York, NY 10027	Dec. 29, 1965.
908-31	Insecticide dusting powder	Capital Chemical Co., 5405 Butler Road, Washington, DC 20016	May 9, 1967.
1658-20	Hil-Phene II disinfectant detergent	Hillyard Chemical Co., P.O. Box 603, St Joseph, Mo 64502	Mar. 1, 1973.
1927-51	Terminix Diazinon 4S	Terminix International, Inc., P.O. Box 17167, Memphis, TN 38117	July 11, 1974.
1927-52	Terminix Diazinon 4E	do	Feb. 25, 1974.
1927-59	No-Vex Diazinon A insecticide	do	Nov. 14, 1975.
2217-565	Res-Q 200 seed disinfectant and protectant dust or slurry	FBN-Garden Corp., P.O. Box 4000 Kansas City, MO 64101	June 8, 1972.
3051-30	2 percent Parathion dust	Agricultural Products Co., Inc., P.O. Box Drawer A, Mesquite, NM 88048	Apr. 16, 1953.
3051-64	Biotrol BTB Parathion 2-2	do	Sept. 12, 1963.
3051-78	Thuricide HP Parathion 144M-2	do	May 15, 1975.
4077-43	Orb No. 126 roach and ant bomb with Diazinon	Orb Industries, Inc., 2 Race St. (Box 1097), Upland, PA 19015	June 14, 1963.
4584-60	Aerocos crawling insect killer, contains Diazinon	Gem Inc., One Gem Boulevard, Byhalia, MS 38611	July 12, 1971.
4584-61	Aerocos residual insecticide	do	May 20, 1969.
5130-8	King spray roach, ant, spider, fly, mosquito	Johnson Chemical Co., Inc., 225-233 Johnson Ave., Brooklyn, NY 11206	Feb. 7, 1972.
5348-13	Patco Rout with Diazinon	Patco Products Inc., Div. Of Vaughan's Seed Co., Chimney Rock Road, Bound Brook, NJ 08805.	July 30, 1970.
6427-1	Sani-Det cleaner-disinfectant-germicidal deodorant	P.B. Gott and Sons Co., 1515 Madison Ave., SE, Grand Rapids, MI 49500	June 24, 1959.
6720-48	SMCP DSMA-2 powder	Southern Mill Creek Products Co., Inc., P.O. Box 1036, Tampa, Fl 33601	Mar. 7, 1963.
6735-145	Tide Herban 21P wettable powder for pre-emergence weed control in sorghum	Tide Products Inc., P.O. Box 1020, Edinburg, TX 78539	Dec. 20, 1963.
8238-4	Detergent-Bactenostat super concentration	Barrer Industries, Inc., 200 East Main St., Port Jervis, NY 12771	Aug. 15, 1963.
8238-5	Detergent-Bacteriostat super concentrate	do	Dec. 31, 1963.
8238-7	Detergent-Bactenostat No. 306 super concentration	do	Jan. 24, 1963.
9232-2	Fed Phene 128 cleaner disinfectant	Federal International Chemicals, P.O Box 10,000, Wheeling, IL 60090	Dec. 7, 1970.
10199-1	Blue Ribbon contains diazinon	Best Way Exterminating Co., 3081 Cropsey Ave., Brooklyn, NY 11224	May 1, 1963.
10329-1	Rychem 812-Sfmicide	Ryco, Inc., 601 Washington St., Conshohocken, PA 19428	June 18, 1969.
10592-1	Glowon tree killer	Key Chemicals, Inc., 203 Edith Point, Anacortes, WA 98221	Jan. 7, 1970.
47916-12	Atrazine 80W	Wesley Industries, Inc., P.O. Box 456, Montrose, Al 36559	Mar. 4, 1983.
47916-13	Atrazine 4L	do	Mar. 4, 1983.

The Agency has agreed that each cancellation shall be effective August 17, 1984, unless within this time the registrant, or other interested person with the concurrence of the registrant, requests that the registration be continued in effect. The registrants were notified by certified mail of this action.

The Agency has determined that the sale and distribution of these products produced on or before the effective date of cancellation may legally continue in commerce until the supply is exhausted, or for one year after the effective date of cancellation, whichever is earlier; provided that the use of these products is consistent with the label and labeling registered with EPA. Furthermore, the sale and use of existing stocks have been determined to be consistent with the purposes of FIFRA as amended. Sale or distribution of any quantity of any of these products produced after the effective date of cancellation will be considered to be a violation of the Act.

Requests that the registration of these products be continued may be submitted in triplicate to the Process Coordination Branch, Registration Division (TS-767C), Office of Pesticide Programs, Environmental Protection Agency, 401 M St., SW., Washington, D.C. 20460.

Comments may be filed regarding this notice. Written comments should bear a notation indicating the document control number "[OPP-66111]" and the specific registration number. Any comments filed regarding this notice will be available for public inspection in Rm. 236, CM#2, at the above address from 8:00 a.m. to 4:00 p.m., Monday through Friday, excluding legal holidays.

(Sec. 6(a)(1) of FIFRA as amended, 86 Stat. 973, 89 Stat. (751, 7 U.S.C. 136))

Dated: June 14, 1984.

Edwin L. Johnson,

Director, Office of Pesticide Programs.

[FR Doc. 84-18600 Filed 7-17-84; 8:45 am]

BILLING CODE 6560-50-M

[PP 4G2979/T453; FRL-2628-2]

American Cyanamid Co., Establishment of Temporary Tolerance

AGENCY: Environmental Protection Agency (EPA).

ACTION: Notice.

SUMMARY: EPA has established a temporary tolerance for residues of the herbicide AC 252, 214, 2-[4,5-dihydro-4-methyl-4-(1-methylethyl)-5-oxo-1H-imidazol-2-yl]-3-quinolinecarboxylic acid in or on the raw agricultural commodity soybeans. This temporary tolerance was requested by American Cyanamid Company.

DATE: This temporary tolerance expires August 23, 1985.

FOR FURTHER INFORMATION CONTACT: By mail:

Robert Taylor, Product Manager (PM) 25, Registration Division (TS-767C), Office of Pesticide Programs, Environmental Protection Agency, 401 M St., SW., Washington, D.C. 20460.

Office location and telephone number: Rm. 245 CM#2, 1921 Jefferson Davis Highway, Arlington, VA, (703-557-1800).

SUPPLEMENTARY INFORMATION: American Cyanamid Co., Agricultural Research Division, P.O. Box 400, Princeton, NJ 08540, has requested, in pesticide petition PP 4G2979 the establishment of a temporary tolerance for residues of the herbicide AC 252, 214, 2-[4,5-dihydro-4-methyl-4-(1-methylethyl)-5-oxo-1H-imidazol-2-yl]-3-quinolinecarboxylic acid in or on the raw agricultural commodity soybeans at 0.05 part per million (ppm).

This temporary tolerance will permit the marketing of the above raw agricultural commodity when treated in accordance with the provisions of experimental use permit 241-EUP-108 which is being issued under the Federal Insecticide, Fungicide, and Rodenticide Act (FIFRA) as amended, (Pub. L. 95-396, 92 Stat. 819; 7 U.S.C. 136).

The scientific data reported and other relevant material were evaluated, and it was determined that establishment of the temporary tolerance will protect the public health. Therefore, the temporary tolerance has been established on the condition that the pesticide be used in accordance with the experimental use permit and with the following provisions:

1. The total amount of the active ingredient to be used must not exceed the quantity authorized by the experimental use permit.

2. American Cyanamid Co. must immediately notify the EPA of any findings from the experimental use that have a bearing on safety. The company must also keep records of production, distribution, and performance and on request make the records available to any authorized officer or employee of the EPA or the Food and Drug Administration.

This tolerance expires August 23, 1985. Residues not in excess of this amount remaining in or on the raw agricultural commodity after this expiration date will not be considered actionable if the pesticide is legally applied during the term of, and in accordance with, the provisions of the experimental use permit and temporary tolerance. This tolerance may be revoked if the experimental use permit is revoked or if any experience with or scientific data on this pesticide indicate that such revocation is necessary to protect the public health.

The Office of Management and Budget has exempted this notice from the requirements of section 3 of Executive Order 12291.

Pursuant to the requirements of the Regulatory Flexibility Act (Pub. L. 96-534, 94 Stat. 1164, 5 U.S.C. 610-612), the Administrator has determined that regulations establishing new tolerances or raising tolerance levels or establishing exemptions from tolerance requirements do not have a significant economic impact on a substantial number of small entities. A certification statement to this effect was published in the Federal Register of May 4, 1981 (46 FR 24950).

(Sec. 408(j), 68 Stat. 516, (21 U.S.C. 346a(j)))

Dated: June 28, 1984.

Douglas D. Campt,

Director, Registration Division, Office of Pesticide Programs.

[FR Doc. 84-18598 Filed 7-17-84; 8:45 am]

BILLING CODE 6560-50-M

[PP 3G2959/T452; FRL-2628-3]

E.I. du Pont de Nemours & Co., Establishment of Temporary Tolerance

AGENCY: Environmental Protection Agency (EPA).

ACTION: Notice.

SUMMARY: EPA has established a temporary tolerance for residues of the herbicide DPX-F6025 (ethyl 2-[[[[(4-chloro-6-methoxypyrimidin-2-yl)-aminocarbony]] aminosulfonyl] benzoate) in or on the raw agricultural commodity soybeans. This temporary tolerance was requested by E.I du Pont de Nemours and Company.

DATE: This temporary tolerance expires September 30, 1985.

FOR FURTHER INFORMATION CONTACT:

By mail: Robert Taylor, Product Manager (PM) 25, Registration Division (TS-767C), Office of Pesticide programs, Environmental Protection Agency, 401 M St., SW., Washington, D.C. 20460.

Office location and telephone number: Rm. 245, CM#2, 1921 Jefferson Davis Highway, Arlington, VA, (703-557-1800).

SUPPLEMENTARY INFORMATION: E. I. du Pont de Nemours and Co., Wilmington, DE 19898, has requested, in pesticide

petition PP 3G2959 the establishment of a temporary tolerance for residues of the herbicide DPX-F6025 (ethyl 2-[[[[(4-chloro-6-methoxypyrimidin-2-yl)-aminocarbonyl]] aminosulfonyl] benzoate) in or on the raw agricultural commodity soybeans at 0.05 part per million (ppm).

This temporary tolerance will permit the marketing of the above raw agricultural commodity when treated in accordance with the provisions of experimental use permit 352-EUP-113 which is being issued under the Federal Insecticide, Fungicide, and Rodenticide Act (FIFRA) as amended, (Pub. L. 95-396, 92 Stat. 819; 7 U.S.C. 136).

The scientific data reported and other relevant material were evaluated, and it was determined that establishment of the temporary tolerance will protect the public health. Therefore, the temporary tolerance has been established on the condition that the pesticide be used in accordance with the experimental use permit and with the following provisions:

1. The total amount of the active ingredient to be used must not exceed the quantity authorized by the experimental use permit.

2. DuPont must immediately notify the EPA of any findings from the experimental use that have a bearing on safety. The company must also keep records of production, distribution, and performance and on request make the records available to any authorized officer or employee of the EPA or the Food and Drug Administration.

This tolerance expires September 30, 1985. Residues not in excess of this amount remaining in or on the raw agricultural commodity after this expiration date will not be considered actionable if the pesticide is legally applied during the term of, and in accordance with, the provisions of the experimental use permit and temporary tolerance. This tolerance may be revoked if the experimental use permit is revoked or if any experience with or scientific data on this pesticide indicate that such revocation is necessary to protect the public health.

The Office of Management and Budget has exempted this notice from the requirements section 3 Executive Order 12291.

Pursuant to the requirements of the Regulatory Flexibility Act (Pub. L. 96-534, 94 Stat. 1164, 5 U.S.C. 610-612), the Administrator has determined that regulations establishing new tolerances or raising tolerance levels or establishing exemptions from tolerance requirements do not have a significant economic impact on a substantial number of small entities. A certification statement to this effect was published in the Federal Register of May 4, 1981 (46 FR 24950)

(Sec. 408(j), 68 Stat. 516, (21 U.S.C. 346a(j))).

Dated: June 28, 1984.

Douglas D. Campt,

Director, Registration Division, Office of Pesticide Programs.

[FR Doc. 84-18537 Filed 7-17-84; 8:45 am]

BILLING CODE 6560-50-M

[PP 9G2160/T456; FRL-2628-4]

Fluridone; Extension of Temporary Tolerance

AGENCY: Environmental Protection Agency (EPA).

ACTION: Notice

SUMMARY: EPA has extended a termporary tolerance for residues of the herbicide fluridone in or on the raw agricultural commodity fish.

DATE: This temporary tolerance expires June 1, 1985.

FOR FURTHER INFORMATION CONTACT:

By mail: Richard Mountfort, Product Manager (PM) 23, Registration Division (TS-767C), Office of Pesticide Programs, Environmental Protection Agency, 401 M St., SW., Washington, D.C. 20460.

Office location and telephone number: Rm. 237, CM#2, 1921 Jefferson Davis Highway, Arlington, VA, (703-557-1830).

SUPPLEMENTARY INFORMATION: EPA issued a notice, that was published in the Federal Register of June 1, 1983 (48 FR 24454), announcing the renewal of a temporary tolerance for residues of the herbicide fluridone 1-methyl-3-phenyl-5-[3-(trifluoromethyl) phenyl]-4(1*H*)-*(pyridinone)* in or on the raw agricultural commodity fish at 0.1 part per million (ppm). This temporary tolerance was issued in response to pesticide petition PP 9G2160, submitted by Elanco Products Co., 740 South Alabama St., Indianapolis, IN 46285. Since then, the company has requested a further extension of the tolerance which EPA has granted. A related food additive petition, 9H5202 extending a food additive regulation for residues of the herbicide fluridone in or on potable water at 0.01 part per million was also submitted. This temporary tolerance has been extended to permit the continued marketing of the raw agricultural commodity named above when treated in accordance with the provisions of experimental use permit (1471-EUP-67), which is being extended under the Federal Insecticide, Fungicide, and Rodenticide Act (FIFRA) as amended, (92 Stat. 819; 7 U.S.C. 136).

The scientific data reported and other relevant material were evaluated, and it was determined that the extension of the temporary tolerance will protect the public health. Therefore, the temporary tolerance has been extended on the condition that the pesticide be used in accordance with the experimental use permit and with the following provisions:

1. The total amount of the active ingredient to be used must not exceed the quantity authorized by the experimental use permit.

2. Elanco Products Co. must immediately notify the EPA of any findings from the experimental use that have a bearing on safety. The company must also keep records of production, distribution, and performance and on request make the records available to any authorized officer or employee of the EPA or the Food and Drug Administration.

This tolerance expires June 1, 1985. Residues not in excess of this amount remaining in or on the raw agricultural commodity after this expiration date will not be considered actionable if the pesticide is legally applied during the term of, and in accordance with, the provisions of the experimental use permit and temporary tolerance. This tolerance may be revoked if the experimental use permit is revoked or if any experience with or scientific data on this pesticide indicates that such revocation is necessary to protect the public health.

The Office of Management and Budget has exempted this notice from the requirements of section 3 of Executive Order 12291.

Pursuant to the requirements of the Regulatory Flexibility Act (Pub. L. 96-534, 94 Stat. 1164, 5 U.S.C. 601-612), the Administrator has determined that regulations establishing new tolerances or raising tolerance levels or establishing exemptions from tolerance requirements do not have a significant economic impact on a substantial number of small entities. A certification statement to this effect was published in the Federal Register of May 4, 1981, (46 FR 24950).

(Sec. 408(j), 63 Stat. 516, (21 U.S.C. 346a(j)))

Dated: June 28, 1984.

Douglas D. Campt,

Director, Registration Division, Office of Pesticide Programs.

[FR Doc. 84-18538 Filed 7-17-84; 8:45 am]

BILLING CODE 6560-50-M

[PF-381; OPP-FRL 2629-6]

Certain Companies; Pesticide Tolerance Petitions; ICI Americas, Inc., and Elanco Products, Co.

AGENCY: Environmental Protection Agency (EPA).

ACTION: Notice.

SUMMARY: EPA has received pesticide petitions relating to the establishment of tolerances for certain pesticide chemicals in or on certain raw agricultural commodities.

ADDRESS: By mail, submit comments identified by the document control number (PF-381) and the petition number, attention Product Manager (PM-23), at the following address:

Information Services Section (TS-757C), Program Management and Support Division, Office of Pesticide Programs, Environmental Protection Agency, 401 M St., SW., Washington, D.C. 20460.

In person, bring comments to:

Information Services Section (TS-757C), Rm. 236, CM#2, 1921 Jefferson Davis Highway, Arlington, VA 22202.

Information submitted as a comment concerning this notice may be claimed confidential by marking any part or all of that information as "Confidential Business Information" (CBI). Information so marked will not be disclosed except in accordance with procedures set forth in 40 CFR Part 2. A copy of the comment that does not contain CBI must be submitted for inclusion in the public record. Information not marked confidential may be disclosed publicly by EPA without prior notice. All written comments filed in response to this notice will be available for public inspection in the Information Services Section office at the address given above, from 8 a.m. to 4 p.m., Monday through Friday, except legal holidays.

FOR FURTHER INFORMATION CONTACT: By mail:

Richard Mountfort (PM-23), Registration Division (TS-767C), Environmental Protection Agency, Office of Pesticide Programs, 401 M St., SW., Washington, D.C. 20460

Office location and telephone number:

Rm. 237, CM#2, 1921 Jefferson Davis Highway, Arlington, VA 22202, (703-557-1830).

SUPPLEMENTARY INFORMATION: EPA has received pesticide petitions (PP) relating to the establishment of tolerances for certain pesticide chemicals in or on certain raw agricultural commodities.

Initial Filings

1. *PP 4F2997* ICI Americas, Inc., Concord Pike & New Murphy Road, Wilmington, DE 19897 Proposes to amend 40 CFR Part 180 by establishing a tolerance for residues for the herbicide sodium salt of fomesafen (5-[2-chloro-4-(trifluoromethyl)phenoxy]-*N*-(methylsulfonyl)-2-nitrobenzamide in or on the raw agricultural commodity soybeans at 0.05 part per million (ppm). The proposed analytical method for determining residues is liquid chromatography.

2. *PP's 4F3093, 4F3094, and 4F3095.* Elanco Products Co., 740 South Alabama St., Indianapolis, IN 46285. Proposes to amend 40 CFR 180.416 by establishing tolerances for residues of the herbicide ethalfluralin (*N*-ethyl-*N*(2-methyl-2-propenyl)-2,6-dinitro-4-(trifluoromethyl)benzenamine) in or the following commodities.

Petition ID	Commodities	Parts per million (ppm)
PP4F3093	Cottonseed	0.05
PP4F3094	Peanut hulls and nutmeat	0.05
PP4F3095	Succulent beans and peas	0.05

The proposed analytical method for determining residues is gas chromatography using an electron detector.

(Sec. 408(d)(2) 68 Stat. 512, (21 U.S.C. 346a(d)(2)))

Dated: June 28, 1984.

Douglas D. Campt,

Director, Registration Division, Office of Pesticide Programs.

[FR Doc. 84-18608 Filed 7-17-84; 8:45 am]

BILLING CODE 6560-50-M

[PP OG2311/T454; FRL 2628-8]

Mobay Chemical Corp., Extension of Temporary Tolerance

AGENCY: Environmental Protection Agency (EPA).

ACTION: Notice.

SUMMARY: EPA has extended a temporary tolerance for residues of the fungicide Beta-([1,1'-biphenyl]-4-yloxy)-alpha-(1,1-dimethylethyl)-1*H*-1,2,4-triazole-1-ethanol in or on the raw agricultural commodity apples.

DATE: This temporary tolerance expires December 31, 1984.

FOR FURTHER INFORMATION CONTACT: By mail:

Henry Jacoby, Product Manager (PM) 21, Registeration Division (TS-767C), Office of Pesticide Programs, Environmental Protection Agency, 401 M St., SW., Washington, D.C. 20460.

Office location and telephone number:

Rm. 229, CM#2, 1921 Jefferson Davis Highway, Arlington, VA, (703-557-1900)

SUPPLEMENTARY INFORMATION: EPA has extended a temporary tolerance for residues of the fungicide Beta-([1,1,' biphenyl]-4-yloxy)-alpha-(1,1-dimethylethyl)-1*H*-1,2,4-triazole-1-ethanol in or on the raw agricultural commodity apples (fresh) at 3.0 parts per million (ppm) as a result of pre-harvest applications. This tolerance was issued in response to pesticide petition PP OG2311, submitted by Mobay Chemical Corporation, Agricultural Chemicals Division, P.O. Box 4913, Kansas City, MO 64120.

This temporary tolerance has been extended to permit the continued marketing of the raw agricultural commodity named above when treated in accordance with the provisions of experimental use permit (3125-EUP-168), which is being extended under the Federal Insecticide, Fungicide, and Rodenticide Act (FIFRA) as amended, (Pub. L. 95-396, 92 Stat. 819; 7 U.S.C. 136).

The scientific data reported and other relevant material were evaluated, and it was determined that the extention of this temporary tolerance will protect the public health. Therefore, the temporary tolerance has been extended on the condition that the pesticide be used in accordance with the experimental use permit and with the following provisions:

1. The total amount of the active ingrediant to be used must not exceed the quantity authorized by the experimental use permit.

2. Mobay Chemical Corp. must immediately notify the EPA of any findings from the experimental use that have a bearing on safety. The company must also keep records of production, distribution, and performance and on request make the records available to any authorized officer or employee of the EPA or the Food and Drug Administration.

This tolerance expires December 31, 1984. Residues not in excess of this amount remaining in or on the raw agricultural commodity after this expiration date will not be considered actionable of the pesticide is legally applied during the terms of, and in accordance with, the provisions of the experimental use permit and temporary tolerance. This tolerance may be revoked if the experimental use permit is revoked or if any experience with or

scientific data on this pesticide indicate that such revocation is necessary to protect the public health.

The Office of Management and udget has exempted this notice from the requirements of section 3 of Executive Order 12291.

Pursuant to the requirements of the Regulatory Flexibility Act (Pub. L. 96-534, 94 Stat. 1164, 5 U.S.C. 601-612), the Administrator has determined that regulations establishing new tolerance or raising tolerance levels or establishing exemptions from tolerance requirements do not have a significant economic impact on a substantial number of small entities. A certification statement to this effect was published in the Federal Register of May 4, 1981, (46 FR 24950).

(Sec. 408 (j), 68 Stat. 516, (21 U.S.C. 346a(J)))

Dated: June 28, 1984.

Douglas D. Campt,

Director, Registration Division, Office of Pesticide Programs.

[FR Doc. 84-18602 Filed 7-17-84; 8:45 am]

BILLING CODE 6560-50-M

[PF-3801; OPP-FRL 2629-5]

Mobay Chemical Corp., Pesticide Tolerance Petitions

AGENCY: Environmental Protection Agency (EPA).

ACTION: Notice.

SUMMARY: EPA has received pesticide and food additive petitions relating to the establishment and/or amendment of tolerances for the combined residues of the fungicide (1-(4-chlorophenoxy)-3,3-dimethyl-1-(1*H*-1,2,4-triazol-1-y1)-2-butanone and its metabolite in or on certain raw agricultural commodities.

ADDRESS: By mail, submit comments identified by the document control number (PF-380) and the petition number, attention Product Manager (PM-21), at the following address:

Information Services Section (TS-757C), Program Management and Support Division, Office of Pesticide Programs, Environmental Protection Agency, 401 M St., SW., Washington, D.C. 20460

In person, bring comments to:

Information Services Section (TS-757C), Environmental Protection Agency, Rm. 236, CM #2, 1921 Jefferson Davis Highway, Arlington, VA 22202,

Information submitted as comment concerning this notice may be claimed confidential by marking any part or all of that information as "Confidential Business Information" (CBI). Information so marked will not be disclosed except in accordance with procedures set forth in 40 CFR Part 2. A copy of the comment that does not contain CBI must be submitted for inclusion in the public record. Information not marked confidential may be disclosed publicly by EPA without prior notice. Written comments filed in response to this notice will be available for public inspection in the Information Services Section office at the address given above, from 8 a.m. to 4 p.m., Monday through Friday, except legal holidays.

FOR FURTHER INFORMATION CONTACT: By mail:

Henry Jacoby (PM-21), Registration Division (TS-767C), Environmental Protection Agency, Office of Pesticide Programs, 401 M St., SW., Washington, D.C. 20460

Office location and telephone number:

Rm. 229, CM #2, 1921 Jefferson Davis Hwy., Arlington, VA 22202, (703-557-1900)

SUPPLEMENTARY INFORMATION: EPA has received pesticide (PP) and food additive (FAP) petitions relating to the establishment and/or amendment of tolerances for residues of the fungicide 1-(4-chlorophenoxy)-3,3-dimethyl-1-(1*H*-1,2,4-triazol-1-y1)-2-butanone and its metabolite beta-(4-chlorophenoxy)-alpha-(1,1-dimethylethyl)-1*H*-1,2,4-triazol-1-ethanol in or on certain raw agricultural commodities.

I. Initial Filing

FAP 4H5433. Mobay Chemical Corporation, P.O. Box 4913, Kansas City, MS 64120. Proposes amending 21 CFR 193.83 by establishing a regulation permitting residues of the above fungicide in or on the commodities as follows:

Commodities	Parts per million (ppm)
Cottonseed; cake, meat, and oil	0.05
Molasses	0.10
Sugar, refined	0.05

II. Amended Petition

PP 3F2938. Mobay Chemical Corp. EPA issued a notice published in the Federal Register of September 28, 1983 (48 FR 44268) which announced that Mobay Chemical Corp. had submitted pesticide petition 3F2938 to the Agency proposing to amend 40 CFR 180.410 by establishing tolerances for the combined residues of the above fungicide (FAP 4H5433) in or on the commodities coffee beans at 0.05 ppm, cottonseed at 0.20 ppm, and sugarcane at 0.10 ppm.

Mobay has amended this petition by deleting cottonseed at 0.20 ppm and sugarcane at 0.10 ppm.

(Secs. 408(d)(2) 63 Stat. 512, (21 U.S.C. 346a(d)(2)), 409(c)(1), 72 Stat. 1786 (21 U.S.C. 348(c)(1)))

Dated: June 28, 1984.

Douglas D. Campt,

Director, Registration Division, Office of Pesticide Programs.

[FR Doc. 84-18607 Filed 7-17-84; 8:45 am]

BILLING CODE 6560-50-M

[PP 2G2661/T455; FRL-2631-7]

Mobay Chemical Corp.; Establishment of Temporary Tolerances

AGENCY: Environmental Protection Agency (EPA).

ACTION: Notice.

SUMMARY: EPA has established temporary tolerances for residues of the fungicide Beta-([1,1'-biphenyl]-4-yloxy)-alpha-(1,1-dimethylethyl)-1*H*-1,2,4-triazole-1-ethanol in or on certain raw agricultural commodities. These temporary tolerances were requested by Mobay Chemical Corporation.

DATE: These temporary tolerances expire December 31, 1985.

FOR FURTHER INFORMATION CONTACT:

By mail: Henry Jacoby, Product Manager (PM) 21, Registration Division (TS-767C), Office of Pesticide Programs, Environmental Protection Agency, 401 M St., SW., Washington, D.C. 20460.

Office location and telephone number: Rm. 229, CM#2, 1921 Jefferson Davis Highway, Arlington, VA, (703-557-1900).

SUPPLEMENTARY INFORMATION: Mobay Chemical Corporation, Agricultural Chemicals Division, P.O. Box 4913, Kansas City, MO 64120, has requested in pesticide petition PP 2G2661 the establishment of temporary tolerances for residues of the fungicide Beta-([1,1'-biphenyl]-4-yloxy)-alpha-(1,1-dimethylethyl)-1*H*-1,2,4-triazole-1-ethanol in or on the raw agricultural commodities apricots, nectarines, and peaches at 5.0 parts per million (ppm) and plums (fresh) at 2.0 ppm as a result of preharvest applications.

These temporary tolerances will permit the marketing of the above raw agricultural commodities when treated in accordance with the provisions of the experimental use permit 3125-EUP-181, which is being issued under the Federal Insecticide, Fungicide, and Rodenticide Act (FIFRA) as amended (Pub. L. 95-396, 92 Stat. 819; 7 U.S.C. 136).

The scientific data reported and other relevant material were evaluated, and it

was determined that establishment of the temporary tolerances will protect the public health. Therefore, the temporary tolerances have been established on the condition that the pesticide be used in accordance with the experimental use permit and with the following provisions:

1. The total amount of the active ingredient to be used must not exceed the quantity authorized by the experimental use permit.

2. Mobay Chemical Corp. must immediately notify the EPA of any findings from the experimental use that have a bearing on safety. The company must also keep records of production, distribution, and performance and on request make the records available to any authorized officer or employee of the EPA or the Food and Drug Administration.

These tolerances expire December 31, 1985. Residues not in excess of these amounts remaining in or on the raw agricultural commodities after this expiration date will not be considered actionable if the pesticide is legally applied during the term of, and in accordance with, the provisions of the experimental use permit and temporary tolerances. These tolerances may be revoked if the experimental use permit is revoked or if any experience with or scientific data on this pesticide indicate that such revocation is necessary to protect the public health.

The Office of Management and Budget has exempted this notice from the requirements of section 3 of Executive Order 12291.

Pursuant to the requirements of the Regulatory Flexibility Act (Pub. L. 96-534, 94 Stat. 1164, 5 U.S.C. 610-612), the Administrator has determined that regulations establishing new tolerances or raising tolerance levels or establishing exemptions from tolerance requirements do not have a significant economic impact on a substantial number of small entities. A certification statement to this effect was published in the Federal Register of May 4, 1981 (46 FR 24950).

(Sec. 408(j), 68 Stat. 516, (21 U.S.C. 346a(j)))

Dated: July 6, 1984.

Robert V. Brown,

Acting Director, Registration Division, Office of Pesticide Programs.

[FR Doc. 84-18827 Filed 7-17-84; 8:45 am]

BILLING CODE 6560-50-M

[PP 3G2820/T457; FRL-2631-8]

Sandoz Co., Establishment of Temporary Tolerance

AGENCY: Environmental Protection Agency (EPA).

ACTION: Notice.

SUMMARY: EPA has established a temporary tolerance for residues of the fungicide 2-methoxy-N-(2-oxo-1,3-oxazolidin-3-yl) acet-2', 6'-xylidide (SAN 371F) in or on the raw agricultural commodity potatoes. This temporary tolerance was requested by Sandoz Company.

DATE: This temporary tolerance expires April 30, 1985.

FOR FURTHER INFORMATION CONTACT:

By mail: Henry Jacoby, Product Manager (PM) 21, Registration Division (TS-767C), Office of Pesticide Programs, Environmental Protection Agency, 401 M St., SW., Washington, D.C. 20460.

Office location and telephone number: Rm. 229, CM#2, 1921 Jefferson Davis Highway, Arlington, VA, (703-557-1900).

SUPPLEMENTARY INFORMATION: Sandoz Company, 480 Camino del Rio South, San Diego, CA 92108, has requested in pesticide petition PP 3G2820 the establishment of a temporary tolerance for residues of the fungicide 2-methoxy-N-(2-oxo-1,3-oxazolidin-3-yl) acet-2', 6'-xylidide (SAN 371F) in or on the raw agricultural commodity potatoes (fresh market use only) at 0.5 part per million (ppm) as a result of preharvest applications. The company has requested that residues in treated crop do not exceed the established tolerances for SAN 371F and for mancozeb under the interim tolerance of 1.0 ppm. If these tolerances are exceeded, the crop must be destroyed or used for research purposes only.

This temporary tolerance will permit the marketing of the above raw agricultural commodity when treated in accordance with the provisions of the experimental use permit 11273-EUP-33, which is being issued under the Federal Insecticide, Fungicide, and Rodenticide Act (FIFRA) as amended (Pub. L. 95-396, 92 Stat. 819; 7 U.S.C. 136).

The scientific data reported and other relevant material were evaluated, and it was determined that establishment of the temporary tolerances will protect the public health. Therefore, the temporary tolerance has been established on the condition that the pesticide be used in accordance with the experimental use permit and with the following provisions:

1. The total amount of the active ingredient to be used must not exceed the quantity authorized by the experimental use permit.

2. Sandoz Co. must immediately notify the EPA of any findings from the experimental use that have a bearing on safety. The company must also keep records of production, distribution, and performance and on request make the records available to any authorized officer or employee of the EPA or the Food and Drug Administration.

This tolerance expires April 30, 1985. Residues not in excess of these amounts remaining in or on the raw agricultural commodity after this expiration date will not be considered actionable if the pesticide is legally applied during the term of, and in accordance with, the provisions of the experimental use permit and temporary tolerance. This tolerance may be revoked if the experimental use permit is revoked or if any experience with or scientific data on this pesticide indicate that such revocation is necessary to protect the public health.

The Office of Management and Budget has exempted this notice from the requirements of section 3 of Executive Order 12291.

Pursuant to the requirements of the Regulatory Flexibility Act (Pub. L. 96-534, 94 Stat. 1164, 5 U.S.C. 610-612), the Administrator has determined that regulations establishing new tolerances or raising tolerance levels or establishing exemptions from tolerance requirements do not have a significant economic impact on a substantial number of small entities. A certification statement to this effect was published in the Federal Register of May 4, 1981 (46 FR 24950).

(Sec. 408(j), 68 Stat. 516, (21 U.S.C. 346a(j)))

Dated: July 6, 1984.

Robert V. Brown,

Acting Director, Registration Division, Office of Pesticide Programs.

[FR Doc. 84-18823 Filed 7-17-84; 8:45 am]

BILLING CODE 6560-50-M

[OPP-30000/40 PH-FRL 2632-2]

Special Review of Pesticide Products Containing Daminozide

AGENCY: Environmental Protection Agency (EPA).

ACTION: Notice of Special Review.

SUMMARY: This Notice announces that EPA is initiating a Special Review of all pesticide products containing the active ingredient daminozide [butanedioic acid mono (2,2-dimethylhydrazide), succinic acid, 2,2-dimethyl-hydrazide]. EPA has determined that daminozide and its hydrolysis product unsymmetrical 1,1-dimethylhydrazine (UDMH) are oncogenic in laboratory animals. Daminozide and UDMH have been found in both raw agricultural commodities and processed food;

therefore, a risk may be present to human health. The Special Review will be conducted under EPA's regulations in 40 CFR 162.11.

DATE: Comments, evidence to rebut the conclusions in this Notice, and other relevant information must be received on or before *September 4, 1984.*

ADDRESS: Written comments, by mail to:

Information Services Section, Program Management and Support Division (TS-757C), Office of Pesticide Programs, Environmental Protection Agency, 401 M St., SW., Washington, D.C. 20460.

In person, bring comments to: Rm. 236, CM #2, 1921 Jefferson Davis Highway, Arlington, VA.

FOR FURTHER INFORMATION CONTACT:

By mail: Joanna J. Dizikes, Registration Division (TS-767C), Office of Pesticide Programs, Environmental Protection Agency, 401 M St., SW., Washington, D.C. 20460.

Office location and telephone number: Rm. 711-C, CM #2, 1921 Jefferson Davis Highway, Arlington VA, (703-557-7400).

SUPPLEMENTARY INFORMATION: In a document entitled "Guidance for the Interim Registration of Pesticide Products Containing Daminozide as the Active Ingredient" (Guidance Document), EPA sets out its conclusion that daminozide and UDMH cause oncogenic effects in laboratory animals and that dietary exposure and oncogenic risk are high. The Guidance Document is available to the public from the previously mentioned contact person. This Guidance Document explains the basis of EPA's decisions to start this Special Review. Also, it contains references, background information, data requirements and other information pertinent to the reregistration of pesticides containing daminozide.

The term "Special Review" is the name now being used by EPA for the process previously called the Rebuttable Presumption Against Registration (RPAR) process. Modifications in the process will be proposed in regulations in the near future. The present Special Review will adhere to RPAR procedures now in effect.

During the Special Review EPA will solicit comments on the risks and benefits associated with all uses of daminozide. Issuance of this Notice (also called Position Document 1 (PD-1)) announces that potential adverse effects associated with the use of daminozide have been identified and will be examined further to determine their extent and whether, in light of the benefits of daminozide, such risks are unreasonable.

I. Initiation of a Special Review

A. General

A pesticide product may only be sold or distributed in the United States if it is registered or exempt from registration under the Federal Insecticide, Fungicide, and Rodenticide Act (FIFRA) (7 U.S.C. 136 *et seq.*). Before a product will be registered it must be shown that it can be used without "unreasonable adverse effects on the environment" (FIFRA sec. 3(c)(5)), that is, without causing "any unreasonable risk to man or the environment, taking into account the economic, social and environmental costs and benefits of the use of the pesticide" (FIFRA sec. 2(bb)). The burden of proving that a pesticide meets this standard for registration is on the proponent of initial or continued registration. If at any time the Agency determines that a pesticide no longer meets this standard for registration, then the Administrator may cancel the registration under section 6 of FIFRA.

The Agency has created an administrative process for fully evaluating whether a pesticide may no longer satisfy the statutory standard for registration. This Special Review (RPAR) process provides an informal procedure through which EPA may gather and evaluate information about the risks and benefits of use of a pesticide. It also provides a means by which interested members of the public may comment on and participate in EPA's decision making process. The regulations governing this process are set forth at 40 CFR 162.11.

A Special Review (RPAR) is begun when EPA determines that a pesticide meets or exceeds one or more of the risk criteria set out in the regulations (40 CFR 162.11(a)(3)). The Agency announces its commencement of the Special Review by issuing a document setting forth the Agency's concerns, and by issuing a Notice of Determination for publication in the Federal Register; this latter document is commonly called a Position Document (PD) 1. In addition, registrants of affected products receive notice by certified mail. Registrants and other interested persons are invited to scrutinize the basis for the Agency's decision to initiate the Special Review. Additional data and information may be submitted which either show that the Agency's determination of risk was in error or support the Agency's determination of risk. Furthermore, registrants, users, and other interested persons may suggest methods to reduce the risks of use of the pesticide to acceptable levels. In addition to addressing risk issues, commenters are encouraged to submit evidence and discussions of the economic, social and environmental costs and benefits of use of the pesticide.

Following the initiation of the Special Review, the pesticide use or uses of concern will enter the public discussions stage of the Special Review process. Registrants and interested members of the public may submit written comments, information, or request public discussion on the Agency's proposed actions and on other proposals for additional or alternative actions. However, registrants must submit information indicating that daminozide does not pose a health risk to man or the environment and/or that the benefits exceed the risks associated with daminozide use. Interested members of the public may submit information concerning the risks and benefits associated with the use of daminozide. Requests for all meetings for these purposes should be made in accordance with directions described in Unit V, below.

If risk issues are not satisfactorily resolved, EPA will proceed to evaluate the risks and benefits of each daminozide use and to propose a regulatory action in a Position Document 3/3 (PD 3/3). After obtaining comments from the Scientific Advisory Panel, the Secretary of Agriculture, registrants, and the public on the PD 3/3, EPA will issue a Position Document 4 (PD 4) containing EPA's final regulatory position. If EPA determines that the risks of use exceed the benefits, EPA will issue a notice of intent to cancel the registration of products intended for such use. For specific uses, the notice may identify certain changes in the composition, packaging, and/or labeling of the product which will reduce the risks to acceptable levels. Cancellation will become effective unless, within 30 days of issuance of the notice, an adversely affected person requests a hearing to challenge the cancellation or the registrant submits an application to amend the product's registration in a manner prescribed in the notice of intent to cancel.

A notice initiating a Special Review is not a notice of intent to cancel the registration of a pesticide, and a Special Review may or may not lead to cancellation. EPA issues a notice of intent to cancel only after carefully considering the risks and benefits of a pesticide and determining that the pesticide may generally cause unreasonable adverse effects on the environment.

B. Presumption

EPA has determined that registration and applications for registration of pesticide products containing daminozide meet or exceed the risk criteria in 40 CFR 162.11(a)(3)(ii)(A). That section provides that a Special Review (RPAR) shall be conducted if the use of a pesticide "induces oncogenic effects in experimental mammalian species or in man as a result of oral, inhalation or dermal exposure * * *" On the basis of the scientific studies and information summarized in the daminozide Guidance Document, EPA has concluded that this risk criterion may have been exceeded by pesticide products containing daminozide.

The Agency has completed its review of the available data on daminozide and has concluded that daminozide is oncogenic in laboratory rats and mice, and UDMH, a contaminant and hydrolysis product, is oncogenic in laboratory mice and hamsters. Moreover, some tumors are formed at uncommon sites. One study indicated that feeding of daminozide caused adenocarcinomas and leiomyosarcomas of the uterus in female rates, hepatocellular carcinomas in male mice, and alveolar/bronchiolar carcinomas and adenomas in male and female mice and female rats. In a second study, administration of daminozide in drinking water resulted in statistically significant incidences of blood vessel tumors and lung tumors in both male and female mice, as well as a significant incidence of kidney and liver tumors in the male mice. Analysis of the drinking water in this latter study indicated that the UDMH hydrolysis product increased as a function of time. In a third study, administration of drinking water containing UDMH resulted in statistically significant incidences of blood vessel and lung tumors in both male and female mice. Kidney and liver tumors were also noted in this study. In addition, colon tumors have been reported in the open literature from the administration of UDMH in the drinking water of hamsters and mice (Toth, B., "The Large Bowel Carcinogenic Effects of Hydrazines and Related Compounds Occurring in Nature and in the Environment", "Cancer" 40:2427–2431, 1977).

In addition to its concern over exposure to daminozide, the Agency is concerned with the presence of UDMH that is associated with the use of daminozide. UDMH causes oncogenic effects in laboratory animals, and it has demonstrated mutagenic activity in both the presence and absence of metabolic activation. Furthermore, UDMH is consolidated to be rapidly absorbed through the dermal route of exposure, as indicated by animal (dog) data. UDMH is a contaminant in both technical and formulated products. Formulated products, as diluted for use, can form additional UDMH. Formation of UDMH by hydrolysis increases as a function of time, increasing temperature, or increasing pH acidity. The formation of UDMH from daminozide residues has been found following the boiling of apples. In addition, UDMH has been found in apple juice and apple sauce.

The Agency required and received commitments to generate studies to address risk, via section 3(c)(2)(B) of the FIFRA. These data were required in a Special Data Call-In Notice dated August 25, 1983. The required data include:

1. An *in vitro* hydrolysis study simulating the conditions in the human stomach to determine the mechanism and rate of conversion of daminozide to UDMH.

2. An *in vivo* radiolabeled metabolism study in an appropriate species with a stomach pH similar to the human.

3. A residue study on apples treated with daminozide.

4. A C_{14} plant metabolism study to determine the fate of daminozide and UDMH in plants.

5. A residue study on all raw agricultural commodities listed in 40 CFR 180.246, and for each food or feed listed in 21 CFR 193.410 and 561.360.

6. A study to examine conversion of daminozide to UDMH during food preparation and processing.

7 An animal residue feeding study with ruminants and poultry, according to proper protocol.

8. Tiered *in vitro* and *in vivo* study to determine the fate of bound residues.

Daminozide residue data for raw apples which have been submitted to date under section 3(c)(2)(B) of the FIFRA have been evaluated by the Agency. The Agency has concluded that these data do not adequately reflect the amount of the UDMH in apples from the maximum recommended and registered use of daminozide on apples. The Agency has made this conclusion since data are not available to allow the Agency to determine whether daminozide was applied at the maximum registered application rate.

However, the Agency collected both apple and peach samples which had documented treatments with daminozide. These preliminary residue data show that UDMH is present in raw apples and peaches.

Analyses of recently submitted guinea pig metabolism data indicate that daminozide does not break down to UDMH or related molecular structures and other products in the digestive system. These data are among the data required by the Agency which have been submitted, to date, under the FIFRA section 3(c)(2)(B).

Of major concern to the Agency is the potential for break down of daminozide residues to UDMH, a potent animal carcinogen. The combined, available data, to date, indicate that daminozide residues in apples will break down to UDMH by cooking or processing procedures. It has been shown that boiling apples treated with daminozide results in a significant fraction of the daminozide residues converting to UDMH; 5.1 percent of daminozide applied to the apples converted to UDMH. The measurement of field-treated apples containing a lower level of daminozide showed an even higher conversion level of UDMH of 7.7 percent. The percent conversion from daminozide to UDMH residues in apple sauce has ranged from 1.0 per cent to 12.1 per cent on a weight basis, uncorrected for the difference in molecular weight for daminozide and UDMH. Additionally, the percent conversion from daminozide to UDMH in apple juice has ranged from 0.8 per cent to 3.4 per cent on a weight basis, uncorrected for the difference in molecular weight for daminozide and UDMH.

The Agency has reviewed residue data for processed food submitted to date. Residues in processed apple juice ranged from 0.5 to 10.5 parts per million (ppm) and 4.0 to 220 parts per billion (ppb) for daminozide and UDMH, respectively. Residues in processed apple sauce ranged from 0.5 to 10.9 ppm and 4.9 to 383 ppb for daminozide and UDMH, respectively. Daminozide residues in processed apples have ranged from 1.0 to 21 ppm.

Additional market basket studies of commercially processed apple sauce detected daminozide and UDMH from <1 ppm to 1.5 ppm and <1 ppb to 69 ppb, respectively. Analysis of commercially processed apple juice detected daminozide and UDMH ranging from <1 ppm to 1.6 ppm and <1 ppb to 51 ppb, respectively. The results of this "market basket survey" indicate the presence of daminozide and UDMH at significant levels.

The Agency is particularly concerned about UDMH and daminozide dietary exposure to special groups of individuals (especially young children) who consume large quantities of apple products. Exposure of these types of individuals will be one area of focus in

this Special Review, and information is solicited from registrants, applicants, or other interested persons concerning exposure to these groups of individuals.

In addition to apples and apple products, ingestion of several of the raw agricultural commodities (e.g. cherries, plums, tomatoes, peanuts, peaches, pears and nectarines) is expected to result in exposure to high levels of UDMH from hydrolysis of daminozide during processing or cooking. Data are not available, to date, to assess fully the risk resulting from such exposure to UDMH in these raw agricultural commodities. Information concerning the possible hydrolysis of daminozide to UDMH in the processing or home preparation of fruits and vegetables bearing residues of daminozide and/or UDMH is lacking with the exception of the apple commodity.

The Agency estimates that the dietary risk from daminozide residues is high. Additionally, the Agency estimates that dietary risk from UDMH residues will also be significant. The Agency believes that the risk associated with nondietary/applicator exposure to daminozide and UDMH is less significant; the Agency does not believe that daminozide is rapidly absorbed through dermal exposure, and although UDMH is considered to be rapidly absorbed through the dermal route, the Agency believes that the amount of UDMH that applicators are exposed to is low. A full discussion of the Agency's risk analysis is contained in the Guidance Document.

C. Rebuttal Criteria

All registrants, applicants for registration, and other interested members of the public are invited to submit evidence either to support or to rebut the presumption (as listed in Unit I.B. of this Notice) that daminozide poses a risk of oncogenic effects. Under 40 CFR 162.11(a)(4)(iii) the presumption initiating a Special Review must be rebutted by sustaining the burden of proving, in the case of the chronic toxicity criterion, "that the determination by the Agency that the pesticide meets or exceeds any of the criteria for risk was in error."

D. Benefits Information

Under section 3 of the FIFRA, the Agency's decisions on pesticide use must consider benefits as well as risks. In an attempt to quantify the benefits from the use of daminozide as a growth regulator, biological and economic data were compiled on apples and peanuts, the two predominant use sites.

Without daminozide, fresh market Red Delicious and McIntosh apple producers would incur substantial losses in the short run, with possible losses in net revenue ranging up to $30 million per year. U.S. farm value of fresh apple production was approximately $597 million in 1982. Of the above loss, growers of McIntosh apples would lose up to $18.83 million in annual net revenue on 37,300 affected acres. Losses of this level suggest either that alternative apple varieties would be planted over a prolonged period of time, or that some unknown proportion of McIntosh producers would leave the apple industry.

Short term annual income losses on 70,000 affected acres of Red Delicious apples were estimated at $11.22 million, or about $159 per acre. Consumers could encounter reduced quality in fresh apples, as well as a shorter term duration of fresh fruit availability due to reduced apple storage life. Alternatively, a greater quantity of processed apples could be expected at lower than current prices.

In addition to controlling preharvest apple drop, there are other benefits to the grower from daminozide use. Daminozide use gives improved red color which results in a 10 percent increase in packable fruit in North Carolina, and growers receive $2 to $3 more per box of apples for "Extra Fancy" grade fruit in Washington State. Also, daminozide use results in increased fruit firmness which means a 2- to 5-pound pressure increase. This pressure increase equates to fewer finger bruises when picked and fewer transport/sorting bruises. Bruises lead to apple rot during storage which results in an increased number of culls when the fruit is packed for shipment from storage to a supermarket. A pressure increase of 2 to 5 pounds can increase storage life by 2 to 3 months, increase supermarket shelf life (with no refrigeration) for one week, and result in a crunchier apple of greater acceptance to the consumer.

Daminozide use results in an extended harvest period. Daminozide delays the fruit ripening process thereby allowing the grower to hire fewer pickers to harvest the crop over an extended period of time; this time delay allows increased red color with no advancement in apple maturity in the warmer climatic areas, allowing growers to pick the fruit from a given tree only once after ideal coloration has been achieved. Without daminozide, as many as six weekly spot pickings would be required as the apples slowly achieve optimum red coloration before maturity advances too far; the time delay, in effect, extends the harvesting period which is of great importance to growers with "you pick" operations. Daminozide use allows the growers to prevent apple drop with no reduction in apple quality for a period of at least 4 weekends.

Moreover, daminozide use controls vegetative growth and reduces biennial bearing. The use of daminozide to control vegetative growth results in a reduction of pruning costs. Biennial bearing means production of a good crop every other year. Daminozide use results in an acceptable degree of uniform return bloom, set, and subsequent yield every year.

Daminozide use results in delayed development of watercore. Watercore is primarily a problem in the warmer Piedmont growing areas where warm temperatures near harvest accelerate fruit maturation. Watercore is internal rotting that develops before harvest and intensifies during storage. Fruit that develops 50 percent or greater watercore by harvest or while in storage cannot be used as "fresh fruit" and must be diverted to juice. Going from fresh fruit to juice means a price reduction from approximately $10 per bushel to $1.50 per bushel.

Without daminozide, U.S. peanut growers (mostly in the South) could be expected to sustain short term reductions in net revenue, ranging from $4.3 million to $10.7 million annually, or from $23.95 to $59.50 per impacted acre. While impacts of this intensity would represent a substantial financial burden for affected growers, total U.S. production would decline from 1.0 to 1.7 percent, causing no appreciable effect on farm or retail prices. Moreover, it is likely that any serious production shortfalls could be alleviated by increases in allowable production in that poundage quotas will be in effect through 1985.

Daminozide stimulates upright growth of the peanut plant. This results in increased air circulation and light penetration. Also, disease and insect problems are reduced, and harvesting efficiency is increased.

There are alternatives to daminozide for use on apples; however, there are no alternatives to daminozide for use on peanuts. The alternatives for use on apples include: naphthaleneacetic acid, silvex, and ethephon. However, this use of silvex is subject to a Notice of Intent to Cancel registrations. Silvex is currently undergoing cancellation hearings.

In addition to submitting evidence to rebut the presumptions of risk in the Special Review, 40 CFR 162.11(a)(5)(iii) provides that a registrant or applicant, "may submit evidence as to whether the economic, social and environmental

benefits of the use of the pesticide subject to the presumption outweigh the risk of use." If the presumption of risk is not rebutted the benefit evidence submitted by registrants, applicants, and other interested persons will be considered by the Administrator when determining the appropriate regulatory action.

Registrants, applicants, or other interested persons who desire to submit benefit information should consider submitting information on the following subjects along with any other relevant information they desire to submit:

1. Identification of the biological and economic importance of daminozide uses including market studies and estimated quantities applied for those uses.

2. Identification of alternative chemical and nonchemical cultural methods for all registered uses and application techniques.

3. Determination of the change in benefits to daminozide users of obtaining equivalent growth-regulating effects with available substitute products.

4. Assessment of the expected changes in level of efficacy, yield, crop quality or crop injury effects associated with the use of alternatives.

5. Identification of increased or reduced risks associated with the mixing, loading, application, and disposal of alternative chemicals, and other hazards associated with their potential increase in use if daminozide was not available.

6. Identification of cultural practices, spray applications, pre and postharvest activities, or other factors that impact on farmworker exposure to alternative chemicals. Information with regard to alternative cultural, integrated pest management (IPM), or storage practices is particularly solicited.

II. Additional Grounds for Review

EPA has required, through the Guidance document, that additional data be submitted. EPA expects to receive toxicology data (chronic testing, teratology and mutagenicity by July 1988), product chemistry data (product identity, analysis and certification of product ingredients, physical and chemical characteristics by January 1985), environmental fate data (degradation, photodegradation, mobility, and dissipation by January 1985 and metabolism, accumulation, and reentry by July 1986), residue chemistry data (metabolism, analytical methods, and residue data by January 1985), and ecological effects data (avian and mammalian testing and aquatic organism testing by July 1988). The Special Review on daminozide is not being delayed while these data are being generated. The Agency will analyze these data when submitted and take appropriate acton.

III. Rebuttal Submission Procedures

All registrants and applicants for registration are being notified by certified mail of the Special Review being intitiated on their products containing daminozide.

Registrants and applicants for registration have 45 days from the date this notice is received or until September 4, 1984 to submit evidence in rebuttal to the Agency's presumption.

Information submitted in any comment concerning this notice may be claimed confidential by marking any part or all of that information as "Confidential Business Information" (CBI). Information so marked will not be disclosed except in accordance with procedures set forth in 40 CFR Part 2. A copy of the comment that does not contain CBI must be submitted for inclusion in the public record. Information not marked confidential may be disclosed publicly by EPA without prior notice to the submitter. All written comments will be available for public inspection in Rm. 236 at the address given above, from 8 a.m. to 4 p.m., Monday through Friday, excluding legal holidays.

A registrant or applicant who asserts a confidentiality claim for some, but not all, of the information submitted in rebuttal should furnish two copies of the information to the Agency. The first copy should contain all of the evidence submitted in rebuttal, with information claimed to be confidential clearly identified. The second copy should be identical to the first except that all information claimed as confidential should be deleted. The second copy will be placed in the public comment file. The first copy will be treated in accordance with the procedures set out above.

IV Duty To Submit Information on Adverse Effects

Registrants are required by section 6(a)(2) of FIFRA to submit to EPA any additional information regarding adverse effects on man or the environment which comes to their attention at any time. Registrants of daminozide products must immediately submit any published or unpublished information, studies, reports, analyses, or reanalyses regarding any adverse effects from daminozide in animal species or humans, and claimed or verified accidents to humans, domestic animals, or wildlife which have not been previously submitted to EPA. As specified in the Guidance Document, registrants should notify EPA of any studies currently in progress, their purpose, the protocol, the approximate completion date, a summary of all results observed to date, the name and address of the laboratory performing the studies, and a statement as to whether these studies are being conducted in accordance with the Good Laboratory Practices specified in 48 FR 53946.

V Public Comment Opportunity

During the time allowed for submission of rebuttal evidence, specific comments on the presumption set forth in this Notice and on the material in the Guidance Document for reregistation are solicited from the public. In particular, any documented episodes of adverse effects on humans or domestic animals, and information as to any laboratory studies in progress or completed should be submitted to the Agency as soon as possible. Specifically, information on any adverse toxicological effects of daminozide, its impurities, metabolites, and degradation products is solicited. Similarly, submission of any studies or comments on the benefits from the use of daminozide is requested. All comments and information received, as well as any other relevant information and analysis thereof which comes to the attention of EPA, may serve as a basis for final determination pursuant to 40 CFR 162.11(a)(5).

All comments and information should be sent to the address given above, preferably in triplicate, to facilitate the work of EPA and others interested in inspecting them. The comments and information should bear the identifying notation [OPP-30000/40]. Comments received after the specified time will be considered only to the extent feasible, consistent with the time limits imposed by 40 CFR 162.11(a)(5)(ii).

During the comment period, interested members of the public or registrants may request a meeting to discuss the risk issues and methods of reducing risks. Prior to such meetings, the Agency will place an agenda and list of meeting participants in the public docket. Any member of the public interested in obtaining a copy of the agenda prior to the meeting or interested in meeting with the Agency to discuss issues in connection with this Special Review should notify the contact person listed in this Notice. Any records pertaining to such meetings, including minutes, agendas, and comments received will be filed under docket number OPP-30000/40.

Dated: June 29, 1984.

Steven Schatzow,

Office Director, Office of Pesticide Programs.

[FR Doc. 84-18824 Filed 7-17-84; 8:45 am]

BILLING CODE 6560-50-M

[OW-FRL-2633-2]

General National Pollutant Discharge Elimination System Permit for Confined Animal Feeding Operations in Arizona

AGENCY: Environmental Protection Agency (EPA), Region IX.

ACTION: Notice of Draft Permit and Comment Period.

SUMMARY: Region IX of the EPA is hereby giving notice of its tentative determination to issue a general National Pollution Discharge Elimination System (NPDES) permit for certain confined animal feeding operations (feedlots) in the State of Arizona. The general permit will establish effluent limitations, prohibitions, Best Management Practices (BMPs), and other conditions for waste waters generated from these feedlots. This general feedlot permit will eventually replace essentially all individually issued NPDES feedlot permits in the State of Arizona.

DATES: Public comment on this proposal must be made within 31 days after the publication date.

ADDRESS: Public comment should be sent to Jayne Carlin, Permit Records Controller (M-5), EPA Region IX, 215 Fremont St., San Francisco, CA 94105.

FOR FURTHER INFORMATION CONTACT: Andrew Lincoff, Region IX, at the above listed address or telephone (415) 974-8284 or FTS 454-8284. Copies of the proposed permit and Statement of Basis will be provided upon request.

SUPPLEMENTARY INFORMATION:

A. Background

Section 301(a) of the Clean Water Act (CWA) provides that the discharge of pollutants is unlawful except in accordance with an NPDES permit. Under EPA's regulations (40 CFR 122.28), EPA may issue a single, general permit to a category of point sources within the same geographic area if the regulated sources:

(1) Are involved in the same or substantially similar operation;

(2) Generate and discharge the same types of waste;

(3) Require the same permit effluent limitations and/or operating conditions;

(4) Require similar monitoring requirements; and,

(5) In the opinion of the Director of the NPDES permit program, are more appropriately controlled under a general permit than an individual permit.

As in the case of any individal permits issued under the NPDES program, violations of any condition of a general permit constitutes a violation of the CWA enforceable under section 309 of the CWA.

Any owner or operator authorized by the general permit may be excluded from the general permit by applying for an individual permit. Criteria and procedures for such exclusion is published under 40 CFR 122.28(b) of the regulations and therefore need not be printed here.

B. Arizona Feedlots

In Arizona, EPA is the NPDES permit issuing authority. There are 21 feedlot facilities covered by individual NPDES permits issued within the State. These 21 permits expired on June 30, 1984 and were continued under the Administrative Procedure Act (APA, 5 U.S.C. 551 *et seq.*). Final issuance of this general permit will constitute Agency action under the APA, and therefore these facilities will automatically be covered under this general permit. Each of the 21 existing permits contained the same prohibition against any discharger of process generated water (including contaminated storm runoff) except in the event of a 25-year, 24-hour storm, as required under the Effluent Limitation Guidelines at 40 CFR Part 412. The general permit's conditions are the same as the 21 individual permits, using the same Effluent Limitation Guidelines at 40 CFR Part 412. Therefore, the general permit effluent limitations are no more restrictive than those in the 21 individual permits it will replace. Furthermore, any new facilities not previously authorized to discharge under an NPDES permit will be required to apply for coverage under this general permit, but as discussed below, the effluent limitations would be equal to those contained in this draft permit.

This draft general permit will authorize discharges from facilities with more than one-thousand (1000) animal units that had animal confinement facilities in place prior to February 14, 1974. Any dischargers meeting these criteria which are not now authorized to discharge under an individual NPDES permit will be required to notify the Regional Administrator of their intent to be covered by the general permit within 90 days of this permit's effective date.

This general NPDES permit will not initially authorize discharges of pollutants from new concentrated animal feeding operations with more than one thousand (1000) animal units which were constructed after February 14, 1974 and are therefore subject to new source performance standards. Such new source dischargers will be required to notify the Regional Administrator of their concentrated animal feeding operations within ninety (90) days of the permit's effective date, or not less than 180 days prior to beginning operation. New concentrated animal feeding operations may eventually be eligible for coverage under this permit after complying with the environmental review requirements at 40 CFR 6.600 *et seq.* The effluent limitations for "new sources" published at 40 CFR Part 412 are the same as those contained in this permit.

The names and NDPES permit numbers of the 21 facilities in Arizona are:

Facility name	NPDES No.
Gila Feedyards Inc.	AZ0020460
Spur Industries (Higley)	AZ0020473
Spur Industries (San Tan)	AZ0020486
Certified Produce Assn.	AZ0020531
Arlington Cattle Co.	AZ0020591
Sunny Mesa Inc.	AZ0020613
Yuma County Feedyard, Inc.	AZ0020630
Whitewing Agriculture	AZ0020643
M&W Enterprises	AZ0020656
Scottsdale Feedyard	AZ0020664
Davis Dairy	AZ0020672
John E. Smith	AZ0020729
T&C Feeding Co.	AZ0020800
Benedict Feeding Co.	AZ0020940
Final Feeding Co.	AZ0020958
Jones & Jones, Inc.	AZ0021121
Hughes and Gomez Cattle	AZ0021253
AZ Feeds	AZ0021334
Red River Land Co.	AZ0021351
John A. Vanderwey	AZ0021369
Clayton Livestock	AZ0020966

C. Paperwork Reduction Act

EPA has reviewed the requirements imposed on regulated facilities in this draft general NPDES permit under the Paperwork Reduction Act of 1980, 44 U.S.C. 3501 et seq. The information collection and notification requirements of this permit have already been approved by the Office of Management and Budget under submissions made for the NPDES permit program under provisions of the Clean Water Act. The final general NPDES permit will explain how the information collection requirements respond to any OMB or public comments.

D. Executive Order 12291

The Office of Management and Budget has exempted this action from the review requirements of Executive Order 12291 pursuant to section 8(b) of that order.

E. Regulatory Flexibility Act

Twenty-one (21) feedlot facilities in the State of Arizona are currently operating under individual NPDES permits. This proposed general permit contains the same effluent limitations as the current permits. Therefore, this general permit will not require any new facility construction, retrofitting, or additional equipment.

The effluent limitations contained in this general permit are based on the feedlot Best Conventional Pollutant Control Technology (BCT) effluent guidelines published in 40 CFR 412.17 Under the Clean Water Act, any NPDES permit written to authorize discharges from feedlots must include these BCT limitations after July 1, 1984. EPA can not set limits for these facilities less stringent than BCT, regardless of size. This general permit simply requires visual inspection to detect unauthorized discharges as a monitoring requirement. The reporting requirements under the permit are minimal, each operator will only need to provide a yearly discharge monitoring report (DMR) summarizing permitted activities for the year.

This general permit will be less costly to the facilities than the former individual NPDES permits. The effluent limits established by this proposed general permit are not more stringent than the former individual NPDES permits, the application procedure is simpler and less costly for the facilities, and the reporting requirements have been lessened to only once per year. The costs of complying with the terms of this general permit will be less than the costs to comply with the former individual permits.

After review of the facts presented in the notice printed above, I hereby certify, pursuant to the provisions of 5 U.S.C. 605(b), that this general permit will not have a significant impact on a substantial number of small entities. Moreover, it reduces a significant administrative burden on regulated sources.

Dated: May 14, 1984.

Judith E. Ayres,

Regional Administrator.

[FR Doc. 84-18953 Filed 7-17-84; 8:45 am]

BILLING CODE 6560-50-M

[OAR-FRL-2633-1]

PSD Permit for Florida Crushed Stone Co., Brooksville, FL

AGENCY: Environmental Protection Agency.

ACTION: Notice.

SUMMARY: Notice is hereby given that a Prevention of Significant Deterioration (PSD) permit issued on March 27, 1984, became effective on May 3, 1984. The permit was issued to Florida Crushed Stone Company for the construction of a 600,000 tons per year cement plant and cogeneration facility near Brooksville, in Hernando County, Florida.

DATE: This action is effective as of May 3, 1984, the effective date of the PSD permit. Construction must begin within 18 months of this date or the permit will become invalide.

ADDRESSES: Copies of the PSD permit, permit application, and preliminary and final determinations are available for public inspection upon request at the following locations:

Environmental Protection Agency, Region IV, Air Management Branch, Air and Waste Management Division, 345 Courtland Street, NE., Atlanta, Georgia 30365

Bureau of Air Quality Management, Florida Department of Environmental Regulation, Twin Towers Office Building, 2600 Blair Stone Road, Tallahassee, Florida 32301

FOR FURTHER INFORMATION CONTACT: Roger Pfaff of the EPA—Region IV, Air Management Branch at the Atlanta address given above, telephone 404/881-7654 (FTS: 257-7654).

SUPPLEMENTARY INFORMATION: On March 30, 1983, the Florida Crushed Stone Company submitted an application for a PSD permit to construct a 600,000 tons per year cement plant and cogeneration facility near Brooksville, in Hernando County, Florida. The Florida Department of Environmental Regulation (FDER) issued a preliminary determination regarding this source and published a request for public comments on May 27, 1983. In response to a request from Florida Mining and Materials, a hearing was held on November 30, 1983. On January 25, 1984, the FDER submitted the final determination recommending issuance of the PSD permit by EPA. The final determination contains responses to issues raised during the hearing and public comment period. The federal PSD permit was issued on March 27, 1984, and became effective as of May 3, 1984. The effective date of the permit constitutes final Agency action under 40 CFR 124.19(f)(1) and section 307 of the Clean Air Act, for purposes of judicial review. Under section 307(b)(1) of the Act, petitions for judicial review of this action must be filed in the United States Court of Appeals for the appropriate circuit by September 17, 1984. This action may not be challenged later in proceeding to enforce its requirements (See section 307(b)(2)). If construction does not commence within 18 months after this effective date, or if construction is discontinued for a period of 18 months or more, or if construction is not completed within a reasonable time, the permit shall expire and authorization to construct shall become invalid.

(Sec. 160-169 of the Clean Air Act (42 U.S.C. 7470-7479))

Dated: July 5, 1984.

Charles R. Jeter,

Regional Administrator.

[FR Doc. 84-18954 Filed 7-17-84; 8:45 am]

BILLING CODE 6560-50-M

[FRL-2632-7]

Final Determination of the Administrator Concerning the M. A. Norden Site Pursuant to Section 404(c) of the Clean Water Act

AGENCY: Environmental Protection Agency (EPA).

ACTION: Notice of Decision to Prohibit the Use of Disposal Site at Mobile, Alabama.

SUMMARY: This is notice of the Administrator's final determination pursuant to section 404(c) of the Clean Water Act to prohibit the use of a 25-acre wetland site (i.e., the M.A. Norden site) in Mobile, Alabama as a disposal site, based on his finding that the discharge of dredged or fill materials into that site would have unacceptable adverse effects on wildlife at the site and on shellfish beds and fishery areas in Mobile River and Mobile Bay.

EFFECTIVE DATE: The effective date of the final determination is June 15, 1984.

FOR FURTHER INFORMATION CONTACT: William S. Sipple, Aquatic Resources Division, Office of Federal Activities (A-104), U.S. Environmental Protection Agency, 401 M Street, SW., Washington, D.C. 20460 (202) 382-5066.

Copies of the Administrator's final determination are available for inspection in the Public Information Reference Unit, EPA Library, Room M 2904, 401 M Street, SW., Washington, D.C. 20460 and at the EPA Region IV Library, 345 Courtland Street, Atlanta, Georgia 30308.

SUPPLEMENTARY INFORMATION: Under section 404(c) of the Clean Water Act, the Administrator of EPA has the authority to prohibit or restrict the use of a site as a disposal site for dredged or fill material, after notice and opportunity for public hearing, whenever he determines that such disposal will have an unacceptable

adverse effect on municipal water supplies, shellfish beds and fishery areas (including spawning and breeding areas), wildlife, or recreational areas.

In accordance with the section 404(c) regulations (40 CFR Part 231), EPA's Regional Administrator for Region IV, Mr. Charles Jeter, initiated section 404(c) proceedings with respect to a 25-acre wetland site (i.e., the M.A. Norden site) in Mobile, Alabama. His action was in response to a permit application (Mobile District File No. AL-80-00327-C) by Mr. Norden to fill the site for a proposed fiber recycling facility. The background of this action is summarized in the Region's notice of proposed determination and public hearing (published at 48 FR 51732, November 10, 1983).

On January 13, 1984, Mr. Jeter forwarded his recommended determination and the administrative record for the Administrator's review and final determination on the M.A. Norden site. His recommendation to prohibit the use of the M.A. Norden site for use for specification as a disposal site was based upon anticipated unacceptable adverse effects to wildlife areas and downstream fisheries. Mr. Jeter also expressed his opinion that there were alternative upland sites available, the use of which would not result in adverse environmental effects. In view of the significant minority unemployment problem in the project vicinity, Mr. Jeter recommended that EPA assist the State and local communities in attempting to locate such alternative sites for Mr. Norden's proposed fiber recycling facility.

Because of concern over jobs, EPA Headquarters initiated a Special Task Force composed of Federal, State, and local representatives to compile information on the feasibility of using alternative sites to the one proposed by Mr. Norden. The time for a final decision was ultimately extended until July 31, 1984, with the concurrence of the applicant, to enable full consideration of this issue.

After consideration of the record in this case, including the public comments, hearing record, Special Task Force effort, and comments from the Chief of Engineers, and after consultation with the applicant by EPA, the Administrator determined that the use of this 25-acre site as a disposal site would result in unacceptable adverse effects to wildlife at the site and to shellfish beds and fishery areas in Mobile River and Mobile Bay. Specifically, the loss of this ecologically valuable habitat would adversely affect wildlife populations (e.g., various birds, reptiles, amphibians and small mammals) at the immediate site. Furthermore, because of the decrease in the production and export of plant biomass (i.e., detritus) that would result from the filling and the importance of such detritus to the estuarine food webs, this project would have significant impact of fish and shellfishery resources of the Mobile River and Mobile Bay. The Administrator also determined that practical alternative sites for the proposed fiber recycling facility are available which would avoid these adverse impacts. Therefore, he concluded that use of the M.A. Norden site as a disposal site should be prohibited.

Dated: July 11, 1984.

Josephine S. Cooper,

Assistant Administrator for External Affairs.

[FR Doc. 84-18955 Filed 7-17-84; 8:45 am]

BILLING CODE 6560-50-M

FEDERAL RESERVE SYSTEM

First Bancorporation, et al., Formations of; Acquisitions by; and Mergers of Bank Holding Companies

The companies listed in this notice have applied for the Board's approval under section 3 of the Bank Holding Company Act (12 U.S.C. 1842) and § 225.14 of the Board's Regulation Y (49 FR 794) to become a bank holding company or to acquire a bank or bank holding company. The factors that are considered in acting on the applications are set forth in section 3(c) of the Act (12 U.S.C. 1842(c)).

Each application is available for immediate inspection at the Federal Reserve Bank indicated. Once the application has been accepted for processing, it will also be available for inspection at the offices of the Board of Governors. Interested persons may express their views in writing to the Reserve Bank or to the offices of the Board of Governors. Any comment on an application that requests a hearing must include a statement of why a written presentation would not suffice in lieu of a hearing, identifying specifically any questions of fact that are in dispute and summarizing the evidence that would be presented at a hearing.

Unless otherwise noted, comments regarding each of these applications must be received not later than August 10, 1984.

A. Federal Reserve Bank of Boston (Richard E. Randall, Vice President) 600 Atlantic Avenue, Boston, Massachusetts 02106:

1. *The First Bancorporation,* Chelmsford, Massachusetts; to acquire 68.5 percent of the voting shares of The Martha's Vineyard National Bank, Vineyard Haven, Massachusetts.

B. Federal Reserve Bank of St. Louis (Delmer P. Weisz, Vice President) 411 Locust Street, St. Louis, Missouri 63166:

1. *Heber Springs Bancshares, Inc.,* Heber Springs, Arkansas; to acquire 99.2 percent of the voting shares of The First National Bank of Cleburne County, Quitman, Arkansas.

C. Federal Reserve Bank of Kansas City (Thomas M. Hoening, Vice President) 925 Grand Avenue, Kansas City, Missouri 64198:

1. *American Bank Corporation,* Denver, Colorado; to acquire 100 percent of the voting shares of American National Bank of Evanston, Evanston, Wyoming.

2. *Andover Banc Shares, Inc.,* Wichita, Kansas; to become a bank holding company by acquiring 100 percent of the voting shares of National Bank of Andover, Andover, Kansas.

3. *BankOklahoma Corp.,* Tulsa, Oklahoma; to acquire 90 percent of the voting shares of Fidelity of Oklahoma, Inc., Oklahoma City, Oklahoma, thereby indirectly acquiring Fidelity Bank, N.A., Oklahoma City, Oklahoma.

4. *First Guthrie Bancshares, Inc.,* Guthrie, Oklahoma; to acquire an additional 8.09 percent of the voting shares of First Stillwater Bancshares, Inc., Stillwater, Oklahoma, the parent of First Union Corporation, Stillwater, Oklahoma, and The First National Bank and Trust Co., Stillwater, Oklahoma.

5. *Lone Wolf Bancshares, Inc.,* Lone Wolf, Oklahoma; to become a bank holding company by acquiring at least 90 percent of the voting shares of First State Bank, Lone Wolf, Oklahoma.

6. *Valley Bancorp, Inc.,* Brighton, Colorado; to acquire 100 percent of the voting shares of First National Bank of Brighton, Brighton, Colorado. Applicant now owns 100 percent of the bank which currently operates as an industrial bank under the title of Platte Valley Industrial Bank, Brighton, Colorado.

Board of Governors of the Federal Reserve System, July 12, 1984.

James McAfee,

Associate Secretary of the Board.

[FR Doc. 84-18910 Filed 7-17-84; 8:45 am]

BILLING CODE 6210-01-M

GENERAL SERVICES ADMINISTRATION

[GSA Order ADM 1095.1D]

Environmental Considerations in Decisionmaking

AGENCY: Public Building Service, General Services Administration.

ACTION: Notice.

SUMMARY: This notice proposes revised internal GSA procedures to be followed in implementing the requirements of section 102(2) of the National Environmental Policy Act of 1969, an amended (NEPA) (42 U.S.C. 4321, et seq.); Executive Order 11514 of March 5, 1970, entitled "Protection and Enhancement of Environmental Quality;" and the Regulations issued by the Council on Environmental Quality (43 FR 55978). The intended effect of this document is to exclude certain actions from the requirement to prepare an environmental assessment or impact statement, and to make minor changes reflecting current GSA organization structure.

DATE: Comments must be received on or before August 17, 1984.

ADDRESS: Comments should be addressed to General Services Administration (PRE), Washington, DC 20405.

FOR FURTHER INFORMATION CONTACT: Mr. Robert F Mattheis, Acting Director, Environmental Affairs Staff, Office of Space Management, Public Buildings Service, General Services Administration, Washington, DC 20405; telephone 566-0654.

Dated: July 2, 1984.

L. L. Mitchell,

Commissioner, Public Buildings Service.

GSA Order

Subject: Environmental considerations in decisionmaking

1. *Purpose.* This order provides procedures for implementing the laws, Executive orders, and directives concerning all major GSA actions that significantly affect the quality of the human environment.

2. *Cancellation.* ADM 1095.1C published at 44 FR 33485, June 11, 1979 is canceled.

3. *Background.*

a. The laws, Executive orders, and directives to be implemented include the National Environmental Policy Act of 1969, as amended, (42 U.S.C. 4321, et seq.), hereinafter referred to as NEPA; Executive Order 11514 of March 5, 1970, entitled "Protection and Enchancement of Environmental Quality," as amended by Executive Order 11991 of May 24, 1977; the GSA Policy Manual, ch. 2-11 (ADM P 1000.2B); the GSA Delegations of Authority Manual, ch. 2-17 (ADM P 5450.39C); and the Council on Environmental Quality (CEQ) Regulations, (40 CFR Parts 1500-1508) issued for implementing section 102(2) of NEPA. These are referred to as the Regulations in this directive.

b. Section 102 of NEPA directs all Federal agencies to: (1) Use a systematic, interdisciplinary approach ensuring the integrated use of natural and social sciences and the environmental design arts in planning and decisionmaking which may have an impact on man's environment; (2) in developing methods and procedures, consider economic and technical factors ensuring environmental factors are included; (3) include in each recommendation or report on proposals for legislation and other major actions, a detailed statement including:

(1) The environmental impact;

(2) Any adverse environmental effects which cannot be avoided;

(3) Alternatives;

(4) The relationship between local short-term uses and the maintenance and enhancement of long-term productivity of man's environment;

(5) Any irreversible and irretrievable commitments of resources if the proposed action is implemented.

c. Environmental mandates shall be addressed as an integral part of the NEPA compliance outlined in b. above. These include:

(1) *Historic properties:* (a) The National Historic Preservation Act of 1966 as amended (16 U.S.C. 470 et seq.); (b) Executive Order 11593, Protection and Enhancement of the Cultural Environment, May 13, 1971 (36 FR 8921 et seq.); (c) The Archeological and Historic Preservation Act of 1974, which amends the Reservoir Salvage Act of 1960 (16 U.S.C. 469 et seq.); (d) Procedures for the Protection of Historic and Cultural Properties (Advisory Council on Historic Preservation—36 CFR Part 800); (e) GSA ADM 1020.1, Procedures for historic properties (August 20, 1982) and PBS P 1022.2 Procedures for Historic Properties (March 2, 1981).

(2) *Floodplain management and wetland protection:* (a) Flood Disaster Protection Act of 1973 (42 U.S.C. 4001, et seq.), (b) Executive Order 11988, Floodplain Management, May 24, 1977 (42 FR 26951 et seq.) and Executive Order 11990, Protection of Wetlands, May 24, 1977 (42 FR 26961 et seq.) in accordance with the procedures set forth in Part II—Decision-Making Process, Floodplain Management Guidelines, U.S. Water Resources Council (43 FR 6030, February 10, 1978); (c) GSA ADM 1095.2, Consideration of floodplains and wetlands in decisionmaking, July 23, 1979.

(3) *Coastal zone management:* The Coastal Zone Management Act of 1972 (16 U.S.C. 1451 et seq.).

(4) *Wildlife:* The Fish and Wildlife Coordination Act of 1958 (16 U.S.C. 661 et seq.).

(5) *Endangered species:* The Endangered Species Act of 1973 (16 U.S.C. 1531 et seq.).

(6) *Wild and scenic rivers:* The Wild and Scenic Rivers Act (16 U.S.C. 1271 et seq.).

(7) *Water quality:* The Federal Water Pollution Control Act as amended by the Federal Water Pollution Control Act Amendments of 1972 (33 U.S.C. 1251 et seq.) and later enactments.

(8) *Air quality:* The Clean Air Act (42 U.S.C. 7401 et seq.).

(9) *Solid waste management:* The Solid Waste Disposal Act as amended by the Resource Conservation and Recovery Act of 1976 (42 U.S.C. 6901 et seq.).

(10) *Farmlands protection:* Farmlands Protection Policy Act of 1981 (7 U.S.C. 4201 et seq.).

4. *Nature of revision.* This revision broadens the definition of Class I actions which are categorically excluded from the requirement to prepare an environmental assessment or impact statement. Experience gained in relating GSA programs and projects with the NEPA process indicates the threshold which initiates detailed environmental study can be safely raised without compromise of environmental responsibilities. This order clarifies existing directions and responsibilities, and minor changes reflecting current GSA organizational structure.

5. *Responsibilities*—a. *Commissioner, Public Buildings, Service (P).* The Commissioner, as head of the GSA lead environmental service, acts for the Administrator on environmental matters, develops agency policy, reviews service procedures, and reconciles differences between reviewing and program officials regarding the need for environmental impact statements (EIS) or for more environmental information. The Commissioner may also require the preparation of, or revision to, EIS's if determined necessary and instructs a service or staff office to prepare EIS's on legislative proposals.

(1) *Assistant Commissioner for Space Management (PR).* The Assistant Commissioner initiates and directs GSA's environmental program policy with the responsibility for reviewing environmental documents and procedures and dealing with entities outside the agency on environmental policy matters.

(2) *Director, Environmental Affairs Staff, Office of Space Management*

(PRE). (a) Is the principal advisor on environmental affairs to the Commissioner.

(b) Serves as the responsible agency official under the CEQ Regulations (§ 1507.2(a));

(c) Assists the responsible agency official under the Advisory Council on Historic Preservation's "Regulations for the Protection of Historic and Cultural Properties," hereinafter referred to as the "Advisory Council's Regulations";

(d) Advises the Assistant Commissioner for Space Management on the adequacy of EA's, EIS's and all environmental documents;

(e) Develops and recommends to the Commissioner, agency procedures for complying with other environmental legislation, Executive orders, and regulations;

(f) Reviews GSA's activities and program involvements, and recommends approval, disapproval or modification by the Commissioner, based upon the requirements of this Order.

(g) Develops controls for adverse environmental impacts;

(h) Serves as GSA liaison at conferences, meetings, and public hearings, and on interagency committees dealing with environmental matters;

(i) Maintains liaison on environmental matters with public groups and local, State and Federal agencies;

(j) Reviews and evaluates legislative and administrative proposals for environmental concerns;

(k) Assists in resolving questions from other agencies;

(l) Provides guidance in addressing environmental issues which surface after project approval;

(m) Provides policy guidance and training for the Regional Office staff;

(n) Monitors and audits GSA's performance in carrying out this Order;

(o) Performs other assignments of a policy, administrative or operational nature as requested by the Assistant Commissioner for Space Management;

(p) Acts as Environmental Coordinator for programmatic and legislative issues and EIS's prepared at the headquarters office.

b. *General Counsel.* The General Counsel has the responsibility for interpreting statutes, Executive orders, guidelines, and regulations.

c. *Responsible official.* The responsible official is the Head of a Service or Staff Office of Regional Administrator under whose jurisdiction the action is being planned.

d. *Decisionmaker.* The decisionmaker, a term used in the Regulations, is, for the purpose of this order, the Administrator of General Services or the Administrator's designee.

e. *Other.*

(1) Responsibilities within the services and staff offices are delineated in their corresponding orders. (See par. 6.)

(2) Regulations 40 CFR 1500–1508 (43 FR 55978–56007, Nov. 29, 1978) are not transmitted by this order; responsible GSA employees shall be familiar with the regulations.

6. *Directives.* a. The head of each major program area within GSA having a significant impact on the human environment develops and implements directives (and handbooks, as appropriate) consistent with this order and the Regulations.

b. The directives shall provide, at least the following instructions concerning the processing of environmental assessments, environmental impact statements, and Regional Administrators' responsibilities.

(1) *Environmental assessments.* (a) The responsible official forwards the environmental assessment (EA) and finding of no significant impact (FONSI) to the appropriate Central Office program official (e.g., Assistant Administrator or Commissioner) upon the determination of a FONSI. The Central Office program official should then, forward one copy to the Assistant Commissioner for Space Management, PBS (Attention: Environmental Staff) for purposes of agencywide monitoring of GSA's NEPA responsibilities. A copy of any comments generated by public review shall also be forwarded to the Central Office program official as part of the documentation.

(b) The Commissioner, PBS, reconciles any differences concerning additional information or revision that may arise between program officials and other reviewing officials. Final approval for legal sufficiency is the responsibility of the General Counsel or designee.

(2) *Environmental impact statements.* (a) The responsible official forwards copies of each draft (DEIS), final (FEIS), and any supplement to the appropriate GSA Central Office program official (e.g., Asst. Administrator or Commissioner) concurrent with distribution to the public and local, state and other Federal agencies. The Central Office program official forwards one copy of the document to the Assistant Commissioner for Space Management, PBS (Attention, Environmental Staff, PRE), for purposes of agency-wide monitoring of GSA's NEPA responsibilities. PBS environmental documents will be sent directly to PRE which acts as the PBS program review office and the GSA monitoring office.

(b) The Commissioner, PBS, reconciles, any differences concerning additional information or revision that may arise between the program officials and other reviewing officials; final approval for legal sufficiency shall be the responsibility of the General Counsel or designee. Service orders will state individuals the public can obtain information from or status reports on EIS's and other elements of the NEPA process.

(3) *Environmental responsibilities of the Regional Administrator.* For regional actions the Regional Administrator retains the nondelegable authority for final approval of FONSI's, DEIS's, FEIS's, and Records of Decision. Further, the Regional Administrator will transmit DEIS's and FEIS's to EPA, heads of Federal agencies, Governors, Senators, and Members of Congress.

7. *Role of the environmental assessment (EA) and the environmental impact statement (EIS) process in GSA.* It is GSA's practice to analyze all reasonable alternatives and all environmental factors having a direct or indirect bearing on a proposed action throughout the decisionmaking process. The assessment of the environmental effects of a proposed action and its alternatives must begin with the inception of the proposed action and continue throughout the planning, action development, operation, and disposal stages. The assessment process will provide for complete public disclosure of proposed GSA actions as a means of ensuring that all reasonable alternatives have been seriously considered and analyzed. All the alternatives available and considered shall be documented. The assessment process can be used to determine whether the threshold for the environmental impact statement process has been met and should be initiated. The relevant environmental documents will accompany other decision documents as they proceed through the decisionmaking process. By using the assessment process, it is the goal of GSA to avoid or minimize potential adverse environmental impacts.

8. *Applicability.* GSA actions and activities covered by NEPA include but are not limited to:

a. Major actions that would result from recommendations or favorable reports on legislation, originating from either inside or outside the agency when GSA has primary responsibility for implementation;

b. Major new and continuing actions by GSA, including real property acquisition by Federl construction, purchase, or lease; disposal of any interest in surplus real property to non-

Federal public or private parties; personal property disposal, public building alterations; procurement actions; and stockpile management, acquisition; and disposal actions; and

c. Major actions that would result from establishment or modification of rules, regulations, procedures, and policies.

d. This order applies to all GSA actions of both Central Office and Regional Offices, and implements NEPA, including the supporting Regulations.

9. *Early notice system.* Each service, staff, and regional office shall keep for public inspection a current list of contemplated actions for which (a) EIS's are being prepared, (b) EIS's are planned for preparation, and (c) FONSI's have been approved. As required by the Regulations (sec. 1501.7), a notice shall be placed in the Federal Register notifying the public of GSA's intent to prepare an EIS.

10. *Level of documentation.* a. All GSA actions indicated in appendices A, B, and C will receive appropriate environmental review. The extent depends upon the conditions present in each case. All reviews shall consider, in addition to the primary impact resulting from the proposed action, secondary and cumulative impacts.

b. There are three levels of documentation for environmental response to a proposed GSA action. The most thorough response is the environmental impact statement (EIS), thus it is required for a proposed major Federal action significantly affecting the environment. The second level of response is the development of an environmental assessment (EA) which is prepared when there is insufficient immediate knowledge to determine if environmental impacts are *significant* and therefore require the preparation of an EIS. The EA is a compilation of information sufficient to determine if the proposed action has significant impact. If so, documentation is upgraded to a full EIS; if not, a finding of no significant impact (FONSI) is prepared. The third level is a simple documentation of files stating the action in question is not a major action but falls into one of the following subcategories: (a) It is categorically excluded from the requirement to prepare an EA or EIS and no unusual conditions exist to alter such exclusion. (b) It has been identified by preliminary analysis as having no potential to affecting the quality of the environment. Examples of such analysis include one or more of the following forms of file documentation: environmental checklist, compliance with floodplain/wetlands procedures, compliance with historic preservation procedures. The length of such documentation will normally be minimal, but should be adequate to support the determination.

c. Broad categories of GSA actions have been identified in each of the three levels to aid in determining the type of documentation required for a specific action. They are enumerated in the appendices. The principle services involved with environmental NEPA responsibilities have identified categories individually in the following appendices: PBS, appendix A; FPRS, appendix B; FSS, appendix C.

d. Note that the 3 classes of action in each of the appendices is flexible. Class I actions which are exclusionary, require alertness to unusual circumstances which could modify the exclusion. Classes II & III *normally* require an EA or EIS respectively. Special circumstances can raise or lower the response level.

11. *Decision points.* The designation major decision points (par. 1505.1(b) of the Regulations) for PBS appears in appendix D; for FPRS, in appendix E; and for FSS, in appendix F

12. *Effective date.* Every effort shall be made to immediately implement the provisions of the Regulations and this order.

FIGURE 1.—SUPPLEMENTAL DISTRIBUTION

Office	Copies
All Regional PEP	10
Central Office, PRE	100

Appendix A—Classes of PBS Actions and Indicators of Significance

1. *Classes of actions.* The classes of PBS actions (pars. 2 thru 4) and indicators of significance (par. 5) are listed below. The indicators shall be used as a part of the review process to determine level of reviews necessary. Except for those actions that are categorically excluded from the requirement to prepare an EIS or EA (Class I, par. 2) the range of appropriate review runs from completion of an Environmental Checklist to preparation of a final EIS and record of decision.

2. *Class I, actions that normally do not require either an environmental impact statement (EIS) or an environmental assessment (EA).* The actions in subparagraphs a thru r below are excluded from the requirement to prepare an EIS or an EA. The responsible regional official shall be alert to unusual conditions that would require an EIS or an EA. The following PBS actions are categorically excluded because Agency experience has shown that they do not significantly affect the quality of the human environment. However, where the responsible official determines that any action, activity or program identified in this section may have an environmental effect because of extraordinary circumstances, the requirements of NEPA apply.

a. Repair to or replacement in kind of equipment, e.g., electrical distribution and HVAC systems in GSA-controlled facilities;

b. Repair to or replacement in kind of components; e.g., windows, doors, or roof in GSA-controlled non-historic facilities;

c. Weatherization of non-historic properties;

d. Environmental monitoring;

1e. Procurement contracts for EIS's, EA's, A&E's, supplies, etc;

f. Preparation of regulations, directives, manuals, or other guidance that implement, but do not substantially change these documents, or other guidance of higher organizational levels or another Federal agency;

g. Routine facility maintenance and grounds keeping activities;

h. Minor construction conducted in accordance with approved facility master plans and construction projects on the interiors of non-historic GSA-owned and leased buildings including:

(1) Safety and fire deficiencies (relocate and update fire alarm System) (dead-End corridor stairs);

(2) Air conditioning;

(3) Additional elevators;

(4) Automatic sprinkling systems;

(5) Smoke partitions;

(6) Seismic corrections;

(7) Interior renovation: modification, modernization of non-historic buildings;

(i) Reduction in force resulting from workload adjustments, reduced personnel or funding levels, skill imbalances, or other similar causes;

l. Studies that involve no commitment of resources other than manpower and funding;

k. Acquisition of space within an existing previously occupied structure, either by purchase or lease, where no change in the general type of use and minimal change from previous occupancy level is proposed;

j. Acquisition of less than 20,000 square feet of occupiable space by: (1) Federal construction (2) lease construction (3) new lease for a structure substantially completed prior to solicitation for offers and not previously occupied;

m. Lease extensions, renewals, or succeeding leases;

n. Relocation of employees into existing Federally-owned or commercially leased office space within the same metropolitan area not involving a substantial number of employees, or a substantial increase in the number of motor vehicles at a facility;

o. Expansion or improvement of an existing facility where the gross square footage is not increased by more than 40 percent, and the site size is not increased substantially;

p. Individual personnel actions, administrative actions, collective bargaining with employee unions, ministerial actions, and routine activities normally conducted to protect and maintain GSA controlled properties;

q. Outlease, or license of government-controlled space, or sublease of government-leased space to a non-Federal tenant when

the use will remain substantially the same; and

r. Assisting Federal agencies in public utilities management (excluding communications); negotiating for public utility services on behalf of Federal agencies; and providing expert testimony before public utility regulatory bodies.

3. *Class II, actions that normally require an EIS.* The actions in a through f, below, normally require the preparation of an EIS because they either meet the indicators of significance, they are required by other Agency directives, or experience has shown that significant impacts are normally associated with such actions.

a. Master plans for federally-owned property (major building complexes and sites);

b. Space acquisition programs projected for a given major metropolitan area for a 3 to 5 year period;

c. Federal construction or lease construction projects in excess of 275,000 occupiable square feet of general-purpose space;

d. Actions in a coastal zone that do not comply with an approved Coastal Zone Management Plan;

e. Construction of a critical action within the boundaries of a critical action floodplain, as defined by the Water Resources Council; and

f. Construction of a prison facility where GSA is the lead agency.

4. *Class III, actions that normally require EAs.* An EA will normally be prepared for these actions to determine if an EIS is necessary:

a. Federal construction or lease construction of general-purpose office space between 20,000 and 275,000 occupiable square feet of space; including those undertaken for another Federal agency;

b. Leases for space in existing buildings when an environmental controversy has been identified;

c. Repair and alteration projects which:

(1) Have not been categorically excluded;

(2) Affect those characteristics that qualify a property or objects as historically or culturally significant (as defined by the Advisory Council on Historic Preservation in 36 CFR Part 800);

(3) Are for acquisition and/or alteration of space for a major laboratory that will use large amounts of dangerous or hazardous chemicals, drugs, or radioactive materials; or

(4) Are for control of hazardous and toxic materials/substances such as asbestos, polychlorinated biphenyls (PCBs), explosives, radioactive material, and others.

d. Construction of facilities primarily devoted to special purpose uses such as laboratories, automatic data processing and printing operations;

e. Any action located in or potentially affecting the values and functions of a floodplain or wetland;

f. Action than may affect prime farmlands; or wild and scenic rivers; and

g. Actions that result in changes in land use.

5. *Indicator of significance.* The indicators of significance below are to assist in determining the necessity to prepare an EA or EIS. They point out unusual or sensitive conditions or issues that may require the preparation of an EA for an otherwise categorically excluded action or an EIS for an action that normally requires only an EA. Classes I and II were established in part on the indicators of significance. The determination of whether Class III actions require an EIS or a lesser form of environmental review shall be made based on the following indicators. The order does not arbitrarily establish the number of indicators of significance that must be exceeded before an EIS is required on an action, because each proposed action must be evaluated on a case-by-case basis. However, normally if two or more of the thresholds are exceeded,an EIS is required. It is possible that exceeding a single indicator may trigger the necessity for an EIS.

a. Consultation with appropriate local or regional officials revels that demands generated by the project have potential for, or are recognized as being a burden on part(s) of the local infrastructure. This includes sewer, water, electricity, gas, street system and public transit.

b. The action may lead to a violation of Federal, State, or local law or requirements imposed for the protection of the environment; for example, if air quality standards have been violated within the past year and the project is expected to increase emissions, or construction traffic or project noise will be in violation of GSA, OSHA, State, or local noise standards, and one or more types of sensitive receptors would be at risk.

c. The proposed GSA project, its contractors, or final solid waste disposal site(s) will not be in compliance with the EPA's "Solid Waste Management Guidelines" for thermal processing and land disposal, storage and collection, source separation, and resource recovery facilities; or with any other Federal, State, or local regulations, standards, or health codes. The final disposal site(s) will not have adequate capacity for the solid waste from the proposed GSA project.

d. The action is located on or near an active geological fault or unique geological features.

e. The proposed project will not be compatible with the present zoning or the official land use plan for the specific site and/or affected delineated area.

f. The proposed action may adversely affect an endangered or threatened species or its habitat.

g. The proposed action may adversely affect or be located on parklands, prime farmlands, floodplains, wetlands, wild and scenic rivers, or other ecologically critical areas.

h. The proposed action will result in the use of a significant amount (defined as an amount that if spillage occurs it will result in a health hazard or damage to the ecosystem; or if accidentally dumped into the sewage system will damage treatment facilities or contaminate rivers or streams) of toxic, hazardous, or radioactive materials.

i. Archeological or cultural resources on or potentially eligible for listing on the National Register will be adversely affected by the proposed action.

j. The proposed project will permanently alter or severly affect an area that has been formally recommended for protection by Federal, State, regional, or local government agencies as part of a land use or development plan.

k. The proposed project will be located on or near an active or abondoned toxic, hazardous or radioactive waste disposal site.

l. The proposed action will result in the displacement or relocation of numerous businesses, residences, or farm operations.

m. The proposed project has generated an environmental controversy on a local, State, and/or national level, whether due to factors mentioned in a thru 1 above, or for other reasons of an environmental nature.

6 and 7 *Reserved.*

1. *General.* This appendix lists the classes of action and indicators of significance for actions sponsored by the Federal Property Resources Service (FPRS).

2. *Classes of action.* In accordance with paragraph 1501.4(a) of the Regulations, FPRS actions are classified as follows:

a. *Class I, actions that normally do not require either an environmental impact statement (EIS) or environmental assessment (EA).* (1) The actions listed below in paragraph 2.a.(2), under normal circumstances, are categorically excluded from the requirement to prepare an EIS or an EA. However, FPRS officials shall be alert to any extraordinary circumstances that would require an EIS or an EA. The criteria used to help determine those categories of actions that normally do not require either an EIS or an EA include the assumptions that the action is expected to have:

(a) Minimal or no significant effect on environmental quality.

(b) No significant or environmentally controversial change to existing conditions.

(c) No significant individual or cumulative environmental effects.

(d) Minimal effects, other than social and economic effects.

(e) Similarity to actions previously examined and found to meet the above criteria.

Appendix B—Classes of FPRS Actions and Indicators of Significance

(2) Class I: List of categorical exclusions:

(a) Federal real property utilization surveys in accordance with Executive Order 12348.

(b) Real property inspections for compliance with deed restrictions.

(c) Administrative actions such as procurement of consultant services for appraisal or environmental analysis.

(d) Transfers of real property to Government agencies where there is no conflicting use identified and having significant community support or considered uniquely or especially appropriate for the property.

(e) Assignments of real property to another Federal agency for subsequent conveyance to a State or local agency or to eligible nonprofit institutions, for health, education, or park and recreation uses, where there is no conflicting use identified and having significant community support or considered uniquely or especially appropriate for the property.

(f) Disposal of real property to State or local agencies for wildlife conservation and historic monument purposes where there is no conflicting use identified and having significant community support or considered uniquely or especially appropriate for the property.

(g) Disposal required by Public Law wherein GSA has no discretionary authority.

(h) Disposal of permits, licenses, or leases for 1-year term or less.

(i) Disposal of related personal property, demountable structures, transmission lines, utility poles, railroad ties and track.

(j) Disposal of line-of-site, utility, avigation, flight clearance, right-of-way, or other easements.

(k) Disposal of properties where size, area, topography, and zoning are similar to existing surrounding properties and/or where current and reasonable anticipated uses are/would be similar to current surrounding uses. (For example: commercial store in a commercial strip, farmland in an area of similar sized farms, warehouse in a warehouse complex, row house or vacant lot in an urban area, or office building in a downtown area.)

(l) Off-site disposal, where removal either intact or by demolition of improvements is anticipated, but where site restoration is required.

(m) Aborgations of use restrictions contained in the conveyance documents of previous disposals when,

(i) Upon request of another Federal agency for concurrence, GSA only provides concurrence subject to the requesting agency's compliance with NEPA as appropriate, or

(ii) GSA has no reason to believe that the abrogation will result in a significant change in property use, or

(iii) The abrogation is for a reduction of time only.

(n) Administrative action by GSA to remove clouds on titles.

(o) Sale of improvements to underlying property fee owner and disposal of fee ownership to parties who have had possession and/or use of the property for a period of five years or more through permit, lease, license, or easement. In both cases, only where there is no conflicting use identified and having significant community support or considered uniquely or especially appropriate for the property.

(p) Stockpile acquisitions or disposals of:

(i) Metals: aluminum, antimony, cobalt, copper, gold, lead, nickel, platinum group, silver, tin, titanium, and zinc.

(ii) Agricultural products: opium and its derivates, castor oil and its derivates, quinine and its derivates, and pyrethrum.

(iii) Other: Diamonds, jewel bearings, quartz, manganese dioxide-natural battery grade, mica, rubies, rutile and synthetic sapphires.

(iv) Transportation of hazardous material in conformance with appropriate transportation requirements.

(v) Rotation or upgrading of current inventories.

b. *Class II, actions that normally require an EIS.* (1) The proposed actions listed below under normal conditions require the preparation of an EIS since the actions normally meet some of the indicators of significance and:

(a) Have potential for significant degradation of the environment,

(b) Have potential for a hazard to the public,

(c) Are similar to actions that previously were found to require an EIS, and/or,

(d) Tend to be controversial with respect to environmental impact.

(2) Class II actions are:

(a) Disposal of surplus real property as follows:

(i) Property where complex multiple-use options are contemplated,

(ii) Property formerly used as, or proposed for use as, a hazardous waste disposal site, and

(iii) Property considered to be environmenally contaminated so as to restrict future use.

(b) Stockpile actions that result in the placing into a 100-year floodplain a commodity that would cause a public health, safety, or environmental problem in an aquatic environment.

c. *Class III, actions that normally require EA's but not EIS's.* (1) The actions listed below cannot be readily placed in the Class I or II and require the preparation of an EA prior to the decision as to whether or not to prepare an EIS.

(2) Class III actions are:

(a) Disposal of surplus real property actions not covered in Class I or II, and

(b) Stockpile actions for:

(i) Disposal of materials which have become contaminated or unstable while in storage and have the potential for causing detrimental environmental impact.

(ii) Relocation of hazardous materials that do not qualify for exclusion by law or categorical exclusion.

3. *Indicators of significance.* a. The indicators of significance, hereinafter referred to as indicators, are intended to assist FPRS personnel in determining the necessity to prepare an EA or EIS. The indicators point out unusual or sensitive conditions or issues that may require the preparation of an EA for an otherwise categorically excluded action or an EIS for an action that normally requires only an EA.

b. FPRS indicators are:

(1) For real property actions, the property:

(a) Is in, or would significantly and adversely affect, a

(i) 100 year flood plain,

(ii) Wetland,

(iii) Prime or unique farmland,

(iv) Ecologically critical area,

(v) Endangered species habitat,

(vi) Parkland,

(vii) Active geological fault area or unique geological feature,

(viii) Wild and scenic rivers, or

(b) Is not or will not be operated or utilized in consonance with local zoning regulations or land use plans;

(c) Will probably not continue in its present or a similar use;

(d) Is itself or would have significant adverse affect on a historical, cultural, or archeological resource;

(e) Is in a coastal zone and will be utilized contrary to the approved Coastal Zone Management Plan;

(f) Is environmentally contaminated so as to restrict use; or

(g) Is subject to significant controversy with respect to the environmental impact of the disposal.

(2) For actions involving acquisition or disposal of stockpile materials, the action:

(a) May lead to a violation of Federal, State, or local environmental law or regulations;

(b) May adversely affect an endangered or threatened species or its habitat;

(c) May adversely affect parklands, prime farmlands, floodplains, wetlands, wild and scenic rivers, or ecologically critical areas;

(d) Will result in the storage, handling, use, and disposal of large quantities of dangerous, hazardous, or radioactive materials, the significance to be determined on a case-by-case basis;

(e) May have significant adverse affect on properties and cultural resources listed on or eligible for the National Register of Historic Places;

(f) Will permanently alter an area that has been formally recommended for protection by Federal, State, regional, or local government agencies as part of a land use or development plan;

(g) Will result in an increase of normal stockpile depot traffic flow greater than 100 percent on an annual basis;

(h) Will entail movement of material in containers not meeting minimum industrial standards/practices;

(i) May result in increased air or water pollution from production facilities resulting from new production directly attributable to the acquisition of stockpile materials when total pollutants would exceed Federal or State standards; or

(j) May entail a 10-percent change in the labor force of the industry producing the material.

(3) For the rehabilitation and transfer, donation, or sales of personal property, the property:

(a) May lead to a violation of Federal, State, or local environmental law or regulation, or

(b) Is itself or would adversely affect a historical or cultural resource.

Appendix C—Classes of FSS Actions and Indicators of Significance

1. *Classes of actions.* Classes of FSS actions and indicators of significance are listed below. The indicators will be used as a part of the assessment process to determine the significance of proposed action and if an environmental impact statement is needed for action.

2. *Class I, actions that normally do not require either an EIS or an environmental assessment (EA).* The actions in a thru j, below, are categorically excluded from the requirement to prepare an EIS or an EA under normal circumstances. However, the responsible official will be alert to unusual conditions that would require an EIS or an EA. They are categorically excluded because they normally do not meet any of the indicators of significance and they are routine, will not create greater demands or loads on environmental impact areas, allow

the current agency actions to continue, or do not alter physical conditions.

a. Acquisition of products, materials, and services for Government agencies to meet normal requirements;

b. Preparation of specifications and purchase descriptions for products, materials, and services for the normal requirements of Government agencies;

c. Inspection of products, materials, and services to meet normal requirements; and

d. Distribution of products and materials of agencies.

e. Rehabilitation, transfer, donation, sale or other disposal of federally owned personal property.

f. Assisting Federal agencies in improving transportation management and practices,

g. Negotiating transportation rates and providing expert testimony before transportation regulatory bodies,

h. Auditing Federal transportation documents,

i. Providing Federal fleet management and assisting in energy conservation in the Federal vehicle fleet,

j. Providing motor vehicle support to Federal executive, legislative, and judicial activities through a nationwide system or motor pools.

3. *Class II, actions that normally require an EIS.* These are projects or actions which normally require environmental impact statements from FSS.

4. *Class III, actions that normally require EA's but not EIS's.* An EA is normally prepared for these actions to determine if an EIS is necessary. This order does not arbitrarily establish the number of indicators of significance that must be exceeded before an EIS is required on an action, as each action must be evaluated on a case-by-case basis.

a. Acquisition of products and materials representing a significant percentage of the total market for products and materials with known toxic or hazardous ingredients;

b. Distribution of these products and materials; and

c. Acquisition of products or materials whose manufacture may have a significant impact on the environment and where FSS purchases represent a significant portion of the total market production.

5. *Indicators of significance.* Classes I and II were established based on the following indicators of significance. The determination of whether Class III actions require the preparation of a finding of no significant impact (FONSI) or an EIS shall be made on these indicators:

a. Where FSS purchases exceed 10 percent of the sales of the products;

b. Where stocking points for toxic and hazardous materials may be within or adjacent to densely populated areas and storage of these materials amounts to more than 10 percent of the total space utilized for all products and materials; and

c. Where decisions on stocking patterns or warehouse locations will result in 5 percent change in the permanent standard metropolitan statistical area (SMSA) labor force.

d. In the cases of rehabilitation, transfer, donation, sale, or other disposal of federally owned personal property, when the property:

(1) May lead to a violation of Federal, State, or local environmental law or regulation, or

(2) Is itself or would adversely affect a historical or cultural resource.

BILLING CODE 6820-23-M

ADM 1095.1D

SPACE ACQUISITION ACTIONS

ACTION	Non -Propectus Lease	Prospectus Lease	Prospectus Action Other Than Lease	OFFICIAL	AVAILABLE ENVIRONMENTAL DATA
Determine space needs exist	o	o	o	Reg. PEP and/or Reg. Dir. RED	Begin gathering information
Select method	o	o	o	" " "	Preliminary environmental analysis
Determine delineated area	o	o	o	" " "	Preliminary environmental analysis
Transmit prospectus to OMB		o	o	Administrator	Draft EIS or EA/FONSI
Approve prospectus		o	o	OMB	Draft EIS or EA/FONSI
Request offers for space	o			Reg. Dir RED	Draft EIS or EA/FONSI
Accept lessor's offer	o			Reg. Dir RED Asst. Reg. Adm P	Final EIS or EA/FONSI
Transmit prospectus to PWC		o	o	Administrator	Draft EIS or EA/FONSI
Approve prospectus		o	o	PWC	Draft EIS or EA/FONSI
Site selection		o	o	Reg. Dir RED	Final EIS or EA/FONSI
Request offers for space		o		" " "	Draft EIS or EA/FONSI
Accept lessor's offer		o		Reg. Dir. RED Asst. Reg. Adm P	Final EIS or EA/FONSI

REPAIR & ALTERATION ACTIONS

ACTION	OFFICIAL			AVAILABLE ENVIRONMENTAL DATA
	Initial Space Alteration	Reimbursable Request	Alteration & Repair	
Determine need For R&A Project (initial space alteration; reimbursable; alteration and repair)	Reg. Dir RED	Agency	Reg. Chief, R&A Branch	Begin gathering information
Select extent of alterations	Reg. Dir RED	Agency	Asst. Reg. Adm PBS	Preliminary environmental analysis
Approval of prospectus to:				
1. OMB		Administrator		Draft EIS or EA/FONSI
2. Congress		Administrator		Final EIS or EA/FONSI
OMB approves prospectus		OMB		Draft EIS or EA/FONSI
PWC approves prospectus		PWC		Draft EIS or EA/FONSI
Approve design (R&A and new construction)	Regional Construction Management Division			Final EIS or EA/FONSI

Appendix D. PBS Decision Points when appropriate

ADM 1095.1D

REAL PROPERTY DISPOSAL ACTIONS

Action	Official	Available Environmental Data
1. GSA receives reports of excess of real property from a Federal holding agency and notifies other Federal agencies of the availability of this property for further utilization.	Regional Administrator *	Begin to gather environmental information
2. If a Federal agency desires property, and GSA approves, property is transferred to the Federal agency.	Commissioner, FPRS * or Regional Administrator *	Environmental assessment with a EA/FONSI or recommendation for DEIS.
If no Federal agency desires property or if GSA disapproves request, GSA determines the property surplus and notifies State and local governments of the availability of the property for local public use.	Regional Administrator*	Preliminary environmental analysis
3. GSA reviews State and local public agency or non-profit institution requests to acquire the property as well as the comments of other Federal agencies sponsoring these requests, and for real property considers the pubic sale potential.	Regional Administrator * or Commissioner, FPRS *	Environmental assessment with a FONSI or recommendation for DEIS.
4. GSA Central Office reviews regional office recommendation for FONSI or DEIS notifies regional office only if the Central Office disagrees with regional office.	Commissioner, FPRS *	Environmental assessment with a FONSI or recommendation for a DEIS.
5. GSA regional office maintains EA/FONSI or initiates DEIS.	Regional Administrator *	Environmental assessment with a FONSI or recommendation for a DEIS.
6. GSA Central Office advises Regional Administrator of final disposal determination in cases where Central Office approval is required.	Commissioner, FPRS *	Final EIS or EA/FONSI
7 GSA regional office disposes of property	Regional Administrator *	EA/FONSI or final EIS.

* Or his or her designee

STRATEGIC & CRITICAL MATERIALS ACQUISITION & DISPOSAL ACTIONS

Action	Official	Environmental Action
1. FPRS receives directive from Federal Preparedness Agency (FPA) to acquire or dispose of strategic and critical materials. environmental	Commissioner, FPRS	Tasks Offices of Property Management and Stockpile Disposal to initiate action and identify potential adverse impacts.
2. Preparation of legislative proposal.	Commissioner, FPRS, or Assistant Commissioner for Stockpile Disposal.	Tasks environmental team to develop environmental checklist (EC) on case by case basis; if EC indicates potential adverse impact, tasks team to prepare environmental assessment (EA) or environmental impact statement (EIS)
3. Submission of legislative proposal.	Commissioner, FPRS	Submission of draft EIS or finding of no significant impact (FONSI) and EA.
4. Implementation of legislation.	Commissioner, FPRS, or Assistant Commissioner for Stockpile Disposal and Property	Final EIS or FONSI and EA.

Appendix E. FPRS Decision Points when appropriate

ADM 1095.1D

SUPPLY ACQUISITION ACTIONS

ACTION	Negotiated Contract	Formally Advertised Contract/Stock	Formally Advertised Contract Direct Delivery	OFFICIAL	AVAILABLE ENVIRONMENTAL ACTIONS
Determine agency needs and requirements	o	o	o	Dir., Office of Contracts (FC)	Begin gathering information
Review alternative method of acquisition and supply	o	o	o	" " "	Preliminary environmental analysis
Select method of acquisition and supply	o	o	o	" " "	Draft EIS or EA/FONSI
Prepare and approve technical description	o	o	o	" " "	"
Determine stocking pattern	o	o		Dir., Office of Supply (FS)"	" "
Approve/issue solicitation	o	o	o	Dir , Office of Contracts (FC)"	" "
Contract award	o	o	o	Asst. Adm., FSS (F)	Final EIS or EA/FONSI

PERSONAL PROPERTY DISPOSAL ACTIONS

Action	Official	Available Environmental Data
1. GSA receives reports of excess or surplus personal property from a Federal holding agency and notifies other Federal agencies of the availability of this property for further utilization.	Regional Administrator *	Begin to gather environmental information
2. If a Federal agency desires property, and GSA approves, property is transferred to the Federal agency.	Asst. Adm., for FS&S * or Regional Administrator *	Environmental assessment with a EA/FONSI or recommendation for DEIS.
If no federal agency desires property or if GSA disapproves request, GSA determines the property surplus and notifies State and local governments of the availability of the property for local public use.	Regional Administrator *	Preliminary environmental of analysis
3. GSA reviews State and local public agency or non-profit institution requests to acquire the property as well as the comments of other Federal agencies sponsoring these requests.	Regional Administrator * or Asst. Adm., for FS&S *	Environmental assessment with a FONSI or recommendation for DEIS.
4. GSA Central Office reviews regional office recommendation for FONSI or DEIS and notifies regional office only if the Central Office disagrees with regional office.	Asst. Adm., for FS&S *	Environmental assessment with a FONSI or recommendation for and DEIS.
5. GSA regional office maintains EA/FONSI or initiates DEIS.	Regional Administrator *	Environmental assessment with a FONSI or recommendation for a DEIS.
6. GSA Central Office advises Regional Administrator of final disposal determination in cases where Central Office approval is required.	Asst. Adm., for FS&S *	Final EIS or EA/FONSI
7 GSA regional office disposes of property	Regional Administrator *	EA/FONSI or final EIS.

* Or his or her designee

Appendix F FSS Decision Points when appropriate

[FR Doc. 84-18818 Filed 7-17-84; 8:45 am]
BILLING CODE 6820-23-C

DEPARTMENT OF HEALTH AND HUMAN SERVICES

Food and Drug Administration

Ophthalmic Devices Panel; Meeting

AGENCY: Food and Drug Administration.

ACTION: Notice.

SUMMARY: This notice announces a forthcoming meeting of a public advisory committee of the Food and Drug Administration (FDA). This notice also summarizes the procedures for the meetings and methods by which interested persons may participate in open public hearings before FDA's advisory committees.

Meeting: The following advisory committee meeting is announced:

Ophthalmic Devices Panel

Date, time, and place. August 28, 2 p.m., Conference Rm. G, Parklawn Bldg., 5600 Fishers Lane, Rockville, MD.

Type of meeting and executive secretary. This meeting will be held by a conference telephone call. A speaker telephone will be provided in the conference room to allow public participation in the meeting. Open public hearing, August 28, 2 p.m. to 2:15 p.m., open committee discussion, 2:15 p.m. to 5 p.m., Dr. George C. Murray, Center for Devices and Radiological Health (HFZ-460), Food and Drug Administration, 8757 Georgia Ave., Silver Spring, MD 20910, 301-427-7940.

General function of the committee. The committee reviews and evaluates available data on the safety and effectiveness of devices currently in use and makes recommendations for their regulation. The committee also reviews data on new devices and makes recommendations regarding their safety and effectiveness and their suitability for marketing.

Agenda—Open public hearing. Interested persons may present data, information, or views, orally or in writing, on issues pending before the committee. Those desiring to make formal presentations should notify the executive secretary before August 6, and submit a brief statement of the general nature of the evidence or arguments they wish to present, the names and addresses of proposed participants, and an indication of the approximate time required to make their comments.

Open committee discussion. The committee will discuss general issues relating to approvals of premarket approval applications (PMA's) for intraocular lenses (IOL's), neodymium:yttrium-aluminum-garnet (Nd:YAG) lasers, contact lenses, and other ophthalmic devices and may discuss PMA's for these devices.

FDA public advisory committee meetings may have as many as four separable portions: (1) An open public hearing, (2) an open committee discussion, (3) a closed presentation of data, and (4) a closed committee deliberation. Every advisory committee meeting shall have an open public hearing portion. Whether or not it also includes any of the other three portions will depend upon the specific meeting involved. There are no closed portions for the meetings announced in this notice. The dates and times reserved for the open portions of each committee meeting are listed above.

The open public hearing portion of each meeting shall be at least 1 hour long unless public participation does not last that long. It is emphasized, however, that the 1 hour time limit for an open public hearing represents a minimum rather than a maximum time for public participation, and an open public hearing may last for whatever longer period the committee chairman determines will facilitate the committee's work.

Public hearings are subject to FDA's guideline concerning the policy and procedures for electronic media coverage of FDA's public administrative proceedings. This guideline was published in the Federal Register of April 13, 1984 (49 FR 14723). These procedures are primarily intended to expedite media access to FDA's public proceedings, including hearings before a public advisory committee conducted pursuant to Part 14 of the agency's regulations. Under this guideline, representatives of the electronic media may be permitted, subject to certain limitations, to videotape, film, or otherwise record FDA's public administrative proceedings, including the presentation of participants at a public hearing. Accordingly, all interested persons are directed to the guideline, as well as the Federal Register notice announcing issuance of the guideline, for a more complete explanation of the guideline's effect on public hearings.

Meetings of advisory committees shall be conducted, insofar as is practical, in accordance with the agenda published in this Federal Register notice. Changes in the agenda will be announced at the beginning of the open portion of a meeting.

Any interested person who wishes to be assured of the right to make an oral presentation at the open public hearing portion of a meeting shall inform the contact person listed above, either orally or in writing, prior to the meeting. Any person attending the hearing who does not in advance of the meeting request an opportunity to speak will be allowed to make an oral presentation at the hearing's conclusion, if time permits, at the chairman's discretion.

Persons interested in specific agenda items to be discussed in open session may ascertain from the contact person the approximate time of discussion.

A list of committee members and summary minutes of meetings may be requested from the Dockets Management Branch (HFA-305), Food and Drug Administration, Rm. 4-62, 5600 Fishers Lane, Rockville, MD 20857, between the hours of 9 a.m. and 4 p.m., Monday through Friday.

This notice is issued under section 10(a) (1) and (2) of the Federal Advisory Committee Act (Pub. L. 92-463, 86 Stat. 770-776 (5 U.S.C. App. I)), and FDA's regulations (21 CFR Part 14) on advisory committees.

Dated: July 11, 1984.

William F. Randolph,

Acting Associate Commissioner for Regulatory Affairs.

[FR Doc. 84-18319 Filed 7-17-84; 8:45 am]

BILLING CODE 4160-01-M

Social Security Administration

Statement of Organization, Functions and Delegations of Authority

Part S of the Statement of Organization, Functions and Delegations of Authority for the Department of Health and Human Services (DHHS) covers the Social Security Administration (SSA). Section SJ of the SSA statements, as published in the Federal Register on June 1, 1983, describe the organization and functions of SSA's Office of Disability Insurance (ODI).

Notice is given that Sections S.10, SJ, SJ.10 and SJ.20 are amended to reflect the functional and organizational realignment of the Office of Disability (OD) and provide improved focus and consolidation for the development and issuance of operating policies for the SSA administered disability programs, and to improve accountability and efficiency.

The revised material reads as follows:

Section S.10 *The Social Security Administration*—(Organization): Retitle Subsection H to read: H. The Office of Disability ( ). Section SJ.00 *The Office of Disability*—(Mission): The Office of Disability (OD) plans, develops, evaluates and issues the operational policies, standards and instructions for the SSA administered disability

programs. Develops and promulgates policies and guidelines for use by State, Federal or private contractor providers which implement the disability provisions of the Social Security Act as amended. Provides operational policy advice, technical support and management direction to central office, regional office and field components in the administration of the disability programs. Evaluates the effects of proposed legislation being initiated by SSA's Office of Policy (OP), and legislation pending before Congress to determine the impact on the disability programs. The Office plans and directs a continuing program performance evaluation, and an economic and social survey program to evaluate the current impact and future needs of the disability programs. The Office also ensures that interrelated policy areas are coordinated.

Section SJ.10 *The Office of Disability*—(Organization): The Office of Disability (OD), under the leadership of the Associate Commissioner for Disability, includes:

A. The Associate Commissioner for Disability ( ).

B. The Deputy Associate Commissioner for Disability ( ).

C. The Immediate Office of the Associate Commissioner for Disability ( ).

D. The Medical Consultant Staff ( ).

E. The Division of Medical and Vocational Policy ( ).

F The Division of Technical Policy ( ).

G. The Division of Field Disability Operations ( ).

H. The Division of Vocational Rehabilitation and Special Programs ( ).

I. The Division of Disability Studies ( ).

Section SJ.20 *The Office of Disability*—(Functions):

A. The Associate Commissioner for Disability ( ) is directly responsible to the Deputy Commissioner for carrying out OD's mission and provides general supervision to the major components of OD.

B. The Deputy Associate Commissioner for Disability ( ) assists the Associate Commissioner in carrying out his/her responsibilities and performs other duties as the Associate Commissioner may prescribe.

C. The Immediate Office of the Associate Commissioner for Disability ( ) provides the Associate Commissioner and the Deputy Associate Commissioner with staff assistance on the full range of their responsibilities, and coordinates the administrative and program activities of OD components.

D. The Medical Consultant Staff ( ):

1. Provides advice and consultation to the Associate Commissioner of OD, the Commissioner and other officials of SSA and the Department on all medical aspects in the planning, direction and coordination of the title II disability insurance (DI) program and the title XVI SSI program for the blind and disabled.

2. Develops broad medical concepts and policies for the administration of the title II and title XVI (SSI) programs, and provides consultation for research studies to develop improved medical techniques for evaluating impairment severity and disability.

3. Provides leadership and professional direction to the Regional Medical Officers and consultants, and to State Disability Determination Services (DDS) medical personnel engaged in title II and title XVI (SSI) related activities.

4. Provides medical consultation required in the formulation of medical evaluation and development policies and guides, and develops orientation and training programs for medical personnel in OD, regional offices and State DDSs.

E. The Division of Medical and Vocational Policy ( ):

1. Is responsible for the development, evaluation, implementation and maintenance of medical policy for the major body system impairments (exertional and nonexertional) in initial and continuing claims at all adjudicative levels.

2. Is responsible for general medical policy in areas such as residual functional capacity (RFC), clear-cut cessation, onset and duration of disability and nonsevere impairments.

3. Is also responsible for vocational policy and procedures in areas such as vocational evaluation factors, the vocational grid and work evaluation.

4. Is responsible for related policies, procedures and instructions in initial claims in areas such as development of evidence, failure to cooperate, Federal/State jurisdiction, claimant responsibilities and disability interviews.

F The Division of Technical Policy ( ):

1. Is responsible for developing and issuing the policies and procedures relating to the development of nonmedical evidence, the processing of claims, the development of policy guidelines and technical procedures for the Continuing Disability Reviews (CDR) process.

2. Is responsible for OD's participation in the development of the procedures and instructions which regulate the administrative appeals process; developing notice policy and issuing language and forms for use in disability claims and notices including foreign language and braille notices.

3. Is responsible for coordinating, with the Office of Policy (OP) recommendations concerning which court decisions should be appealed; the development of responses to interrogatories and court orders; and ensuring that policies and procedures are changed to reflect legal precedents and comply with specific court orders.

G. The Division of Field Disability Operations ( ):

1. Provides national guidance for the administrative aspects of the disability determination function whether administered through State DDS, or contracted out to the private sector, or accomplished by designated SSA organizational components.

2. Develops pertinent policies, regulations and procedures; by establishing standards and guides for performance; by monitoring performance; by initiating corrective action where needed; by coordinating workloads; and by administering the funds for the DDSs, etc.

3. Conducts such studies and reviews as are necessary to the disability determination function.

4. Works through SSA regional offices, interested national organizations and other SSA central office components to accomplish objectives or, in special situations, works directly with the component performing the disability determination function.

H. The Division of Vocational Rehabilitation and Special Programs ( ):

1. Implements the provisions of the Social Security Act which call for the referral of beneficiaries and recipients to State or alternate Vocational Rehabilitation (VR) providers, evaluates VR provider services, reimburses VR providers for successful rehabilitations, ensures that client participation in a program is appropriate and meets the requirements of the Act, and develops proposals and plans for new VR initiatives (e.g., demonstration projects).

2. Develops procedures and instructions for the disability provisions of other programs including certain title XVI, Black Lung, Railroad Retirement Board, foreign claims, etc., and coordinates the applicable payment provisions unique to the disability programs.

3. The Division carriers out professional relations efforts in support of SSA's efforts to gain support from professional medical associations, private advocacy groups and the public,

and provides guidance and assistance on professional relations to the SSA regional and DDS field networks.

I. The Division of Diability Studies ( ):

1. Plans and directs a continuing basic economic and social research effort to measure the size, nature and effects of the private and social costs of disability and ill health on the population in general, and to evaluate the effectiveness of the Social Security Disability programs and related service programs, including trust-funded rehabilitation services and Medicare coverage for the disabled.

2. Designs and conducts national surveys of disabled and nondisabled adults, newly disabled, Social Security disability beneficiaries, persons denied disability benefits and the institutionalized.

3. Plans and directs studies of significant disability policy and program issues.

Dated: July 9, 1984.

Nelson J. Sabatini,

Acting Deputy Commissioner for Management and Assessment.

[FR Doc. 84-18931 Filed 7-17-84; 8:45 am]

BILLING CODE 4190-11-M

DEPARTMENT OF THE INTERIOR

Bureau of Indian Affairs

Sisseton-Wahpeton Sioux Tribe; Plan for the Use and Distribution of the Sisseton-Wahpeton Sioux Tribe of Indians Judgment Funds in Docket 363 Before the United States Claims Court

This notice is published in exercise of authority delegated by the Secretary of the Interior to the Assistant Secretary for Indian Affairs by 209 DM 8.

The Act of October 19, 1973 (Pub. L. 93-124, 87 Stat. 466), as amended, requires that a plan be prepared and submitted to Congress for the use or distribution of funds appropriated to pay a judgment of the Indian Claims Commission or Court of Claims to any Indian tribe. Funds were appropriated on August 1, 1983, in satisfaction of the award granted to the Sisseton-Wahpeton Sioux Tribe of Indians before the United States Claims Court in Docket 363. The plan for the use and distribution of the funds was submitted to the Congress with a letter dated March 2, 1984, and was received (as recorded in the Congressional Record) by the Senate on March 12, 1984, and by the House of Representatives on March 8, 1984. The plan became effective on May 22, 1984, as provided by the 1973 Act, as amended by Pub. L. 97-458, since a joint resolution disapproving it was not enacted.

The plan reads as follows:

The share of the Sisseton-Wahpeton Sioux Tribe of South Dakota 73.79 percent, of the award funds in Docket 363 appropriated on August 1, 1983, totaling $3,770,593.68, and the funds appropriated the same date in satisfaction of a Docket 363 award granted specifically to the Sisseton-Wahpeton Sioux Tribe, totaling $902,820.60, all before the United States Claims Court, less attorney fees and litigation expenses, and including all interest and investment income accrued, shall be used and distributed as follows.

Per Capita Payment Aspect

Eighty (80) percent of the funds shall be distributed in the form of per capita payments by the Secretary of the Interior (hereinafter 'Secretary') in sums as equal as possible to all tribal members born on or prior to and living on the effective date of this plan.

Programing aspect

Ten (10) percent of the funds, and any amounts remaining from the per capita payment provided above, shall be invested by the Secretary and utilized by the tribal governing body on an annual budgetary basis for Tribal Administration Programs, which shall include social and economic development projects. The allocation of these funds shall be determined on the basis of the numbers of persons who are the recipients of the per capita payments provided above and who are residents of the Lake Traverse Reservation in South Dakota or of the Upper Sioux Reservation in Minnesota.

Ten (10) percent of the funds shall be invested by the Secretary and utilized by the tribal governing body for community development programs in the seven districts of Lake Traverse Reservation and in the Upper Sioux Community.

General Provisions

The per capita shares of living, competent adults shall be paid directly to them. The per capita shares of deceased individual beneficiaries shall be determined and distributed in accordance with 43 CFR, Part 4, Subpart D. Per capita shares of legal incompetents and minors shall be handled as provided in the Act of October 19, 1973, 87 Stat. 466, as amended January 12, 1983, 96 Stat. 2512.

None of the funds distributed per capita or made available under this plan for programing shall be subject to Federal or State income taxes, nor shall such funds nor their availability be considered as income or resources nor otherwise utilized as the basis for denying or reducing the financial assistance or other benefits to which such household or member would otherwise be entitled under the Social Security Act or, except for per capita shares in excess of $2,000, any Federal or federally assisted programs.

Dated: July 9, 1984.

John W. Fritz,

Acting Assistant Secretary—Indian Affairs.

[FR Doc. 84-18974 Filed 7-17-84; 8:45 am]

BILLING CODE 4310-02-M

Bureau of Land Management

Competitive Sale of Public Lands; Cassia County, ID

AGENCY: Bureau of Land Management, Interior.

ACTION: Notice of Realty Action, I-19677 Competitive Sale of Public Lands in Cassia County, Idaho.

SUMMARY: The following described land has been examined and through development of land use decisions based on public input, it has been determined that the sale of the tract is consistent with section 203(a)(1) of the Federal Land Policy and Management Act of 1976 (FLPMA). The land will be offered for sale using modified competitive bidding procedures (43 CFR 2711.3-1, 2711.3-2) for no less than the appraised fair market value indicated below. Any bids for less than such value will be rejected as required by FLPMA. Only sealed bids will be accepted. A bid will also constitute an application for conveyance of the mineral rights, except geothermal, oil and gas. The mineral interests being offered for conveyance have no known monetary value. Each bidder must submit a fifty dollar ($50)(non-returnable for high bidder) filing fee for the mineral conveyance (43 CFR 2720.1-2(c)) and one-fifth of the full bid price (43 CFR 2711.3-1(d)), with the bid. Failure to deposit these sums will result in disqualification as the high bidder. The authorized officer shall then determine whether to accept the next highest bid, withdraw the public lands from the market or re-offer them for sale at a later date.

Legal description	Acres	Appraised fair market value
T. 16 S., R. 24 E., Boise Meridian Sec. 12: NW¼NW¼	40	$4,000

Upon publication of this Notice in the Federal Register the land described above will be segregated from all forms of appropriation under the public land laws, including the mining laws, but excepting the mineral leasing laws, for a period of two years, or until the lands are sold. The segregative effect may otherwise be terminated by the Authorized Officer by publication of a

termination notice in the Federal Register prior to the expiration of the two-year period.

Bidding procedures for Parcel I-19677 will be modified to allow two designated bidders to meet the high bid. This right is offered to prevent inequities to adjoining land owners and to protect the existing uses. The designated bidders are Elbert Durfee of Almo, Idaho and Olen Ward of Boise, Idaho.

The lands will be subject to the following reservations when patented:

1. A right-of-way for ditches and canals constructed under the Act of August 30, 1890 (43 U.S.C. 945).

2. All geothermal, oil and gas rights (43 U.S.C. 1719).

3. The successful bidder agrees that he takes the real estate subject to the existing grazing use of Olen Ward, holder of grazing authorization number 2403. The rights of Olen Ward to graze domestic livestock on the real estate according to the conditions and terms of grazing authorization number 2403 shall cease on February 28, 1989. The successful bidder is entitled to receive annual grazing fees from Olen Ward in an amount not to exceed that which would be authorized under the Federal grazing fee published annually in the Federal Register.

In addition, the patent will be subject to the following condition:

1. All valid existing rights and reservations of record.

DATES: All sealed bids must be received by 1:30 p.m. on September 12, 1984. At this time all bids will be opened at the Burley District Office.

ADDRESSES: Sealed bids will be accepted at the Burley District Office, Rt. 3, Box 1, 200 South Oakley Highway, Burley, Idaho, 83318. Additional information concerning the land, terms and conditions of the sale, and bidding instructions may be obtained from Sharon LaBrecque, Snake River Realty Specialist, at the above address, or by calling (208) 678-5514. An environmental assessment for the sale is also available for public review at the above address.

SUPPLEMENTARY INFORMATION: For a period of 45 days from the date of this notice, interested parties may submit comments regarding the proposed action. Any adverse comments will be evaluated by the District Manager who may vacate or modify this realty action and issue a final determination. In the absence of any action by the District Manager, this realty action will become the final determination of the Department of the Interior.

The BLM reserves the right to accept or reject any and all offers, or withdraw any land or interest in land from sale if, in the opinion of the authorized officer, consummation of the sale would not be fully consistent with sec. 203(g) of FLPMA or other applicable laws.

Dated: July 9, 1984.

John S. Davis,

District Manager.

[FR Doc. 84-18917 Filed 7-17-84; 8:45 am]

BILLING CODE 4310-GG-M

Indefinite Postponement of Competitive Combined Hydrocarbon Lease Sale in Utah

AGENCY: Bureau of Land Management (BLM), Interior.

ACTION: Notice of Indefinite Postponement of Competitive Combined Hydrocarbon Lease Sale.

SUMMARY: Notice is hereby given that a competitive combined hydrocarbon lease sale, originally scheduled for 1984 has been indefinitely postponed. Eighteen tracts were identified in the recently completed Utah Combined Hydrocarbon Regional Final EIS for consideration in a possible lease sale. Depending on decisions yet to be made regarding the Federal combined hydrocarbon leasing program, a lease sale could be rescheduled for a later date.

FOR FURTHER INFORMATION CONTACT: Ronald B. Bolander (801) 524-3133, Bureau of Land Management, University Club Building, 136 East South Temple, Salt Lake City, Utah 84111.

Dated July 11, 1984.

Roland G. Robison,

State Director.

[FR Doc. 84-18933 Filed 7-17-84; 8:45 am]

BILLING CODE 4310-DQ-M

Implementation of Long-Term Visitor Permit Program and Designation and Revision of Long-Term Visitor Areas; Yuma District, Arizona, and California Desert District, California

AGENCY: Bureau of Land Management, Interior.

ACTION: Implementation of the Long-Term Visitor Permit Program and designation and revision of Long-Term Visitor Areas in the Yuma District, Arizona, and the California Desert District, California.

SUMMARY: The Bureau of Land Management's (BLM) Yuma District and California Desert District will continue the implementation of the "Long-Term Visitor Program" which was established in 1983. The program established an annual long term use season from October 1 to May 31. During this time, visitors who wish to camp on public lands in one location for extended periods must stay in designated "Long Term Visitor Areas (LTVA's)" and purchase a long-term visitor permit.

the earlier established $25 permit fee was waived for the 1983-84 season while information was gathered on the effectiveness of the program and the public was made aware of the new policy. Beginning this season, the fee waiver will be lifted and long-term visitor permits will be issued for a fee of $25. Permits can be obtained at Host Stations or Visitor Centers in the designated LTVA's from uniformed BLM employees or at BLM offices in Yuma, Lake Havasu City (Arizona), Riverside, El Centro, Needles, Barstow, and Ridgecrest (California). The permit entitles the visitor to stay in any of the designated LTVA's during all or part of the annual use season. During the remainder of the year (June 1 to September 30) camping in these sites will be subject to the established 14-Day Limit.

In 1983, the BLM designated nine Long Term Visitor Areas in Arizona and California. For the 1984-85 use season, BLM will designate four additional areas in the California Desert District and enlarge one and combine six existing areas into one large area in the Yuma District (see Table 1).

EFFECTIVE DATE: August 15, 1984.

FOR FURTHER INFORMATION CONTACT: David Mensing, Outdoor Recreation Planner, California Desert District, Riverside, California 92507, (714) 351-6402, or Jill Welch, Outdoor Recreation Planner, Yuma District, Yuma, Arizona 85364, (602) 726-6300.

SUPPLEMENTARY INFORMATION: the purpose of the Long Term Visitor Program is to provide areas for long term winter camping use. The sites designated as Long Term Visitor Areas are, in most cases, the traditional use areas of long term visitors. Designated sites were selected using criteria developed during the management planning process and environmental assessments were completed for each site location.

The program was established to properly accommodate the increasing demand for long-term winter visitation and to provide natural resource protection through improved management of this use. The designation of Long Term Visitor Areas will assure that specific locations are available for long-term use year after after year, and assure that inappropriate areas are not used for extended periods.

Visitors may camp without a Long Term Visitor Permit in LTVA's or on public lands not otherwise closed to camping, for up to 14 days in any 28-day period, unless posted otherwise.

An annual assessment of the program will be made to monitor use, impacts, permit compliance and recommend necessary modifications.

Authority for the designation of Long-Term Visitor Areas in contained in CFR Title 43, Chapter II, § 8372.0-5(g). Authority for the establishment of a long-term visitor permit program is contained in CFR Title 43, Chapter II, § 8372.1 and payment of fees in CFR Title 36, Chapter I, Part 71.

Maps showing the locations of all Long-Term Visitor Areas are available at both the Desert District and Yuma District Officers.

TABLE 1.—LONG TERM VISITOR AREAS

Area	Approximate size (acres)	Location
Mule Mountains	4,500	T. 8 S., R. 20 E. (FBM). Secs. 1, 2, 9, 10, 11, 12, 14, 15, 16, 21, 22, 27, 28, 29, 32, 33, 34.
Pilot Knob	220	T. 16 S., R. 21 E. (SBM). Secs. 27, 28.
Midland LTVA (addition)	1,680	T5S, R22E, SBM Secs. 13, 14, 23, 24.
Vidal Junction LTVA (addition).	60	T IN, R23E SBM Secs. 8, 9.
Hot Springs LTVA (addition)	300	T 16S, R16E SBM Secs. 12, 13.
Tamansk LTVA (addition)	10	T 17S, R18E SBM Sec. 4.
Imperial Dam LTVA (revision) (includes South Mesa, Coyote Ridge, Quail Hill, Kripple, Kreek, Skunk Hollow and Beehive Mesa sites).	285	T 14½ S, R23E SBM Sec. 36. T 15S, R24E Secs. 5, 6, 7, 8, 17, 18, 19. T 15S, R23E SBM Secs. 13, 36.
La Posa (revision)	11,520	T 3N, R16W G&SRM Secs. 6, 7, 8, 17, 18, 19. 3N, R19W G&SRM Secs. 1, 2, 3, 4, 5, 8, 9, 10, 13, 14, 15, 23, 24. 4N, R18W G&SRM Sec. 31. 4N, R19W G&SRM Secs. 25, 26, 27, 28, 32, 33, 34, 35, 36.

Hugh Reicken,

Acting District Manager, California Desert District.

B. Gene Miller,

Acting District Manager, Yuma District.

[FR Doc. 84-18962 Filed 7-17-84; 8:45 am]

BILLING CODE 4310-40-M

Winnemucca District Grazing Advisory Board; Meeting

Notice is hereby given in accordance with Pub. L. 92-163 that a meeting of the Winnemucca District Grazing Board will be held on September 6, 1984. The meeting will begin at 10:00 a.m. in the conference room of the Bureau of Land Management Office at 705 East Fourth Street, Winnemucca, Nevada.

The agenda for the meeting will include:

1. Review Horse Creek and Bullhead Allotment Management Plans (Permittees to attend).

2. Review Range Improvement Projects (8100) and set priorities for FY 1985.

3. Check nominations for Cooperative Management Agreements (CMAs).

4. Range Improvement Policy—Allotment Investment Ranking, Components No. 2 and No. 3.

5. Assignment of Range Improvement maintenance responsibility.

6. Review status of range monitoring.

7. Public Comments.

8. Arrangements for next meeting and discussion of agenda items.

The meeting is open to the public. Interested persons may make oral statements for the Board's consideration. Anyone wishing to make an oral statement must notify the District Manager, 705 East Fourth Street, Winnemucca, Nevada 89445 by August 23, 1984. Depending on the number of persons wishing to make oral statements, a per person time limit may be established by the District Manager. Summary minutes of the Board meeting will be maintained in the District Office and available for public inspection (during regular business hours) within 30 days following the meeting.

Dated: July 11, 1984.

Frank C. Shields,

District Manager.

[FR Doc. 84-18966 Filed 7-17-84; 8:45 am]

BILLING CODE 4310-HC-M

New Mexico; Cancellation of Small Holding Claim

July 9, 1984.

New Mexico Principal Meridian

T. 21 N., R. 10 E.

Small Holding Claim 6221, Tract 1 in section 32, T. 21 N., R. 10 E., surveyed by Charles W. Devendorf in 1922, was cancelled June 28, 1984. The area of the cancelled small holding claim is restored to the public by this action.

Tony A. Gnego,

Acting Chief, Branch of Cadastral Survey.

[FR Doc. 84-18965 Filed 7-17-84; 8:45 am]

BILLING CODE 4310-FB-M

[W-81777]

Wyoming; Proposed Withdrawal; Correction

In FR Doc. 84-16567 beginning on page 25530 in the issue of Thursday, June 21, 1984, make the following corrections on page 25531. In the first column, in T. 51 N., R. 89 W., sec. 13, N½NW¼, should read N½NW¼. In T. 52 N., R. 89 W., sec. 22, W½SW¼, SE¼, should read W½SW¼SE¼, and sec. 23, E½NW¼, should read E½NE¼.

P.D. Leonard,

Associate State Director, Wyoming.

[FR Doc. 84-18964 Filed 7-17-84; 8:45 am]

BILLING CODE 4310-22-M

[W82637]

Wyoming; Intent To Amend the Big Sandy Management Framework Plan, Sweetwater County, WY

AGENCY: Bureau of Land Management, Interior.

ACTION: Notice.

SUMMARY: Notice is hereby given that an environmental assessment is being prepared to determine the acceptability of amending the Big Sandy MFP to authorize the exchange of approximately 2000 acres of public lands (surface and mineral estates). The lands under consideration are within the Bureau of Land Management's Rock Springs District in Sweetwater County, Wyoming.

This notice segregates the public lands described below, from appropriation under the public land laws, including the mining laws, but not from exchange pursuant to section 206 of the Federal Land Policy and Management Act of 1976. The following public lands have been identified for possible exchange:

Sixth Principal Meridian, Wyoming

T. 20 N., R. 101 W.
All of Secs. 6, 8, 22, and 26.
T 21 N., R. 101 W.
All of Secs. 32 and 34.

The purpose of the exchange is to acquire 354.27 acres of private lands within Sections 10, 11, 14 and 15, T. 42 N., R. 115 W., 6th Principal Meridian, Wyoming for the benefit of the U.S. Fish

and Wildlife Service National Elk Refuge. To equalize values, additional private lands will be selected within T. 21 N., R. 101 W., and T. 22 N., R. 101 W., 6th Principal Meridian, Wyoming.

The environmental assessment will be prepared by an interdisciplinary team which will determine the impact of the exchange on present and future surface and mineral use on the involved lands and surrounding area.

For a period of 2 years from the date of publication of this notice in the Federal Register, the lands will be segregated as specified above unless the proposed exchange is denied or cancelled, or the exchange is consummated prior to that date.

DATES: The public is invited for a period of 30 days from the date of publication of this notice to submit written comments, including any issues for consideration, to the following address. The proposed decision and the time and place of the public meeting will be announced in the Federal Register at a later date.

Contact Address

Clinton Hanson, Big Sandy Resource Area Manager, BLM, Box 1170, Rock Springs, WY 82902; (307) 362-6422.

Donald H. Sweep,

District Manager.

[FR Doc. 84-18970 Filed 7-17-84; 8:45 am]

BILLING CODE 4310-22-M

[W87192/W88089]

Wyoming; Intent To Amend the Big Sandy Management Framework Plan, Sweetwater County, WY

AGENCY: Bureau of Land Management, Interior.

ACTION: Notice.

SUMMARY: Notice is hereby given that an environmental assessment is being prepared to determine the acceptability of amending the Big Sandy MFP to authorize the sale of 1,080 acres of public lands (surface and mineral estates). The lands under consideration are within the Bureau of Land Management's Rock Springs District in Sweetwater County, Wyoming. This notice closes the land for up to 2 years from mineral location, but not from mineral leasing.

The following lands have been identified for possible direct sale to the Pacific Power & Light Company for use as flue gas desulfurization pond sites:

Sixth Principal Meridian, Wyoming.

T. 21 N., R. 101 W.
Sec. 22: S½N½, S½;
Sec. 26: All.

The environmental assessment will be prepared by an interdisciplinary team which will determine the impact of the sale on present and future surface and mineral use on the involved lands and surrounding area.

For a period of 2 years from the date of publication of this notice in the Federal Register, the lands will be segregated as specified above unless the proposed sale is denied or cancelled, or the sale is consummated prior to that date.

DATES: The public is invited for a period of 30 days from the date of publication of this notice to submit written comments, including any issues for consideration, to the following address. The proposed decision and the time and place of the public meeting will be announced in the Federal Register at a later date.

Contact Address

Clinton Hanson, Big Sandy Resource Area Manager, BLM, Box 1170, Rock Springs, WY 82902; (307) 362-6422.

Donald H. Sweep,

District Manager.

[FR Doc. 84-18971 Filed 7-17-84; 8:45 am]

BILLING CODE 4310-22-M

Minerals Management Service

Environmental Documents Prepared for Proposed Oil and Gas Operations on the Gulf of Mexico Outer Continental Shelf (OCS); Shell Offshore Inc.

AGENCY: Minerals Management Service, U.S. Department of the Interior.

ACTION: Notice of the Availability of Environmental Documents Prepared for OCS Mineral Exploration Proposals on the Gulf of Mexico OCS.

SUMMARY: The Mineral Management Service (MMS), in accordance with Federal Regulations (40 CFR 1501.4 and 1506.6) that implement the National Environmental Policy Act (NEPA), announces the availability of NEPA-related environmental assessments (EAs) and findings of no significant impact (FONSIs), prepared by the MMS for the following oil and gas exploration activities proposed on the Gulf of Mexico OCS. This listing includes all proposals for which environmental documents were prepared by the Gulf of Mexico OCS Region in the 3-month period preceding this Notice.

Activity/operator	Location	FONSI date
Shell Offshore Inc., four exploratory wells, OCS-G 6417.	Destin Dome Block 160; 55 miles southwest of Panama City, FL.	May 10, 1984.

Persons interested in reviewing environmental documents for the proposals listed above or obtaining information about EAs and FONSIs prepared for activities on the Gulf of Mexico OCS are encouraged to contact the MMS office in the Gulf of Mexico OCS Region.

FOR FURTHER INFORMATION CONTACT: Regional Supervisor (LE), Leasing and Environment, Gulf of Mexico OCS Region, Minerals Management Service, Post Office Box 7944, Metairie, Louisiana 70010, Phone 504/838-0755.

SUPPLEMENTARY INFORMATION: The MMS prepares EAs and FONSIs for proposals which relate to exploration for and the development/production of oil and gas resources on the Gulf of Mexico OCS. The EAs examine the potential environmental effects of activities described in the proposals and present MMS conclusions regarding the significance of those effects. EAs are used as a basis for determining whether or not approval of the proposals constitutes major Federal actions that significantly affect the quality of the human environment in the sense of NEPA and 102(2)(C). A FONSI is prepared in those instances where the MMS finds that approval will not result in significant effects on the quality of the human environment. The FONSI briefly presents the basis for that finding and includes a summary or copy of the EA.

This notice constitutes the public notice of availability of environmental documents required under the NEPA Regulations.

Dated: July 9, 1984.

John L. Rankin,

Regional Manager, Gulf of Mexico OCS Region.

[FR Doc. 84-18972 Filed 7-17-84; 8:45 am]

BILLING CODE 4310-MR-M

INTERNATIONAL TRADE COMMISSION

Agency Form Submitted for OMB Review

AGENCY: In accordance with the provision of the Paperwork Reduction Act of 1980 (44 U.S. Chapter 35), the Commission has submitted a proposal for the collection of information to the

Office of Management and Budget (OMB) for review.

Purpose of Information Collection

The proposed information collection is a "generic clearance" under which the Commission can issue questionnaires for the following types of investigation: countervailing duty, antidumping, escape clause, escape clause review, market disruption and "interference with programs of the USDA."

Summary of Proposal

(1) Number of forms submitted: three

(2) Title of forms: *Sample Producer's, Sample Importer's and Sample Purchaser's questionnaires* (i.e., the "samples" are an aggregate of the information that is likely to be collected in a series of questionnaires issued under the generic clearance)

(3) Type of request: revision

(4) Frequency of use: on occasion

(5) Description of respondents: Businesses or farms that produce, import and/or purchase products under investigation

(6) Estimated annual number of respondents: 4,000

(7) Estimated total annual number of hours to complete the forms: 100,000

(8) Information obtained from the forms that qualifies as confidential business information will be so treated by the Commission and not disclosed in a manner that would reveal the individual operations of a firm.

Additional Information or Comment

Copies of the proposed forms and supporting documents may be obtained from Charles Ervin, the USITC agency clearance officer (tel. no. 202-523-4463). Comments about the proposal should be directed to the Office of Information and Regulatory Affairs of the OMB, Attention: Ms. Francine Picoult, Desk Officer for the U.S. International Trade Commission. If you anticipate commenting on the proposal but find that time to prepare comments will prevent you from submitting them promptly you should advise OMB of your intent as soon as possible. Ms. Picoult's telephone number is (202) 395-7231. Copies of any comments should be provided to Charles Ervin (United States International Trade Commission, 701 E Street NW. Washington, D.C. 20436).

Issued: July 6, 1984.

By order of the Commission.

Kenneth R. Mason,

Secretary.

[FR Doc. 84-19005 Filed 7-17-84; 8:45 am]

BILLING CODE 7020-02-M

[Investigation No. 337-TA-143]

Certain Amorphous Metals and Amorphous Metal Articles; Commission Decision Not to Review Initial Determination; Deadline for Filing Written Submissions on Remedy, the Public Interest, and Bonding

AGENCY: U.S. International Trade Commission.

ACTION: Notice is hereby given that the Commission has determined not to review the presiding officer's initial determination that there is a violation of section 337 in the above-captioned investigation. The parties to the investigation and interested Government agencies are requested to file written submissions on the issues of remedy, the public interest, and bonding.

Authority: The authority for the Commission's disposition of this matter is contained in section 337 of the Tariff Act of 1930 (19 U.S.C 1337) and in §§ 210.53-210.56 of the Commission's Rules of Practice and Procedure (47 FR 25134 (June 10, 1982) as amended by 48 FR 20225 (May 5, 1983) and 48 FR 21115 (May 11, 1983); to be codified at 19 CFR 210.53-210.56).

SUPPLEMENTARY INFORMATION: On May 14, 1984, the presiding officer issued an initial determination that there is a violation of section 337 in the unauthorized importation of certain amorphous metal articles. Pursuant to § 210.54(a) of the Commission's Rules of Practice and Procedure, all parties except the Commission investigative attorney filed petitions for review of the initial determination. Having examined the record in this investigation, including the initial determination of the presiding officer, the petitions for review, and the responses thereto, the Commission on July 6, 1984, determined not to review the initial determination. Consequently, the initial determination has become the Commission determination on violation of section 337 in this investigation.

Written Submissions

Inasmuch as the Commission has found that a violation of section 337 has occurred, it may issue (1) an order which could result in the exclusion of the subject articles from entry into the United States and/or (2) cease and desist orders which could result in one or more respondents being required to cease and desist from engaging in unfair acts in the importation and sale of such articles. Accordingly, the Commission is interested in receiving written submissions which address the form of relief, if any, which should be ordered.

If the Commission contemplates some form of relief, it must consider the effect of that relief upon the public interest. The factors which the Commission will consider include the effect that an exclusion order and/or a cease and desist order would have upon (1) the public health and welfare, (2) competitive conditions in the U.S. economy, (3) the U.S. production of articles which are like or directly competitive with those which are the subject of the investigation, and (4) U.S. consumers. The Commission is therefore interested in receiving written submissions concerning the effect, if any, that granting relief would have on the public interest.

If the Commission orders some form of relief, the President has 60 days to approve or disapprove the Commission's action. During this period, the subject articles would be entitled to enter the United States under a bond in an amount determined by the Commission and prescribed by the Secretary of the Treasury. The Commission is therefore interested in receiving written submissions concerning the amount of the bond, if any, which should be imposed.

The parties to the investigation and interested Government agencies are requested to file written submissions on the issues of remedy, the public interest, and bonding. The complainant and the Commission investigative attorney are also requested to submit a proposed exclusion order and/or a proposed cease and desist order for the Commission's consideration. Persons other than the parties and Government agencies may file written submissions addressing the issues of remedy, the public interest, and bonding. Written submissions on remedy, the public interest, and bonding must be filed not later than the close of business on the day which is fourteen (14) days after publication of this notice in the Federal Register.

Commission Hearing

The Commission does not plan to hold a public hearing in connection with final disposition of this investigation.

Additional Information

Persons submitting written submissions must file the original document and 14 true copies thereof with the Office of the Secretary on or before the deadline stated above. Any person desiring to submit a document (or a portion thereof) to the Commission in confidence must request confidential treatment unless the information has already been granted such treatment by

the presiding officer. All such requests should be directed to the Secretary to the Commission and must include a full statement of the reasons why the Commission should grant such treatment. Documents containing confidential information approved by the Commission for confidential treatment will be treated accordingly. All nonconfidential written submissions will be available for public inspection at the Secretary's Office.

Notice of this investigation was published in the Federal Register of April 13, 1983 (48 FR 15963).

Copies of the public version of the presiding officer's initial determination of May 14, 1984, and all other nonconfidential documents filed in connection with this investigation are available for inspection during official business hours (8:45 a.m. to 5:15 p.m.) in the Office of the Secretary, U.S. International Trade Commission, 701 E Street NW., Washington, D.C. 20436, telephone 202-523-0471.

FOR FURTHER INFORMATION CONTACT: P N. Smithey, Esq., Office of the General Counsel, U.S. International Trade Commission, telephone 202-523-0350.

Issued: July 10, 1984.

By order of the Commission.

Kenneth R. Mason,

Secretary.

[FR Doc. 84-19009 Filed 7-17-84; 8:45 am]

BILLING CODE 7020-02-M

[Investigation No. 731-TA-147 (Preliminary—Remand)]

Cut-to-Length Carbon Steel Plate From the Federal Republic of Germany

Determination

On the basis of the record [1] developed in the subject investigation, the Commission determines, pursuant to section 733(a) of the Tariff Act of 1930 (19 U.S.C. 1673b(a)) and a remand order of the Court of International Trade (*Gilmore Steel Corp.* v. *United States*, Court No. 84-2-00228, Slip Op. 84-85, April 23, 1984), that there is a reasonable indicate that a domestic industry is materially injured [2] by reason of imports from the Federal Republic of Germany of carbon steel plate other than in coils, provided for in item 607.66 of the Tariff Schedules of the United States, which are alleged to be sold in the United States at less than fair value (LTFV). We have made our determination on the basis of an analysis of a regional industry consisting of producers of carbon steel plate located in California, Oregon, and Washington.

Background

On September 29, 1983, a petition was filed with the Commission and the Department of Commerce by counsel representing Gilmore Steel Corp. (Gilmore) alleging that imports of certain flat-rolled carbon steel products [3] from Belgium and the Federal Republic of Germany were being, or were likely to be, sold in the United States at LTFV within the meaning of section 731 of the Act (19 U.S.C. § 1673). The petition was filed on behalf of a national industry with respect to imports from Belgium and on behalf of both a national and a regional industry (including producers located in the States of California, Oregon, and Washington) with respect to imports from the Federal Republic of Germany. Accordingly, effective September 29, 1983, the Commission instituted preliminary antidumping investigations under section 733(a) of the Act. Notice of the institution of the Commission's investigations and of a public conference to be held in connection therewith was given by posting copies of the notice in the Office of the Secretary, U.S. International Trade Commission, Washington, D.C., and by publishing the notice in the Federal Register on October 14, 1983 (48 FR 46865). The conference was held in Washington, D.C., on October 26, 1983, and all persons who requested the opportunity were permitted to appear in person or by counsel.

On November 14, 1983, the Commission advised the Secretary of Commerce that it has made affirmative determination in these investigations on the basis of finding a reasonable indication of material injury to a national industry (see USITC Publication 1451, November 1983).[4] Subsequently, Commerce rescinded its notice of initiation of these investigations on the grounds that Gilmore had not properly filed on behalf of a national industry (49 FR 3503, Jan. 27, 1984). Gilmore contested this action by filing suit in the Court of International Trade. The Court upheld Commerce's rescission insofar as the petition purported to be on behalf of a national industry, but reversed its action insofar as the petition was on behalf of an alleged regional industry and remanded the case to Commerce. Accordingly, Commerce reinitiated an antidumping investigation on carbon steel plate from the Federal Republic of Germany (49 FR 21556, May 22, 1984), noting that the "ITC will determine whether there is a reasonable indication that imports of carbon steel plate from the FRG are materially injuring, or are likely to materially injure, a regional United States industry."[5]

The Commission transmitted its determination in this investigation to the Secretary of Commerce on July 9, 1984. The views of the Commission are contained in USITC Publication 1550 (July 1984), entitled "Investigation No. 731-TA-147 (Preliminary—Remand), Cut-To-Length Carbon Steel Plate from the Federal Republic of Germany.

Issued: July 9, 1984.

By Order of the Commission.

Kenneth R. Mason,

Secretary.

[FR Doc. 84-19014 Filed 7-17-84; 8:45 am]

BILLING CODE 7020-02-M

[Investigation No. 337-TA-197]

Certain Compound Action Metal Cutting Snips and Components Thereof; Investigation

AGENCY: U.S. International Trade Commission.

ACTION: Institution of investigation pursuant to 19 U.S.C. 1337

SUMMARY: Notice is hereby given that a complaint was filed with the U.S. International Trade Commission on June 7, 1984, under section 337 of the Tariff Act of 1930, 19 U.S.C. § 1337, on behalf of Cooper Industries, Inc., First City Tower, Suite 4000, P.O. Box 4446, Houston, Texas 77210. The complaint alleges unfair methods of competition and unfair acts in the importation of certain compound action metal cutting snips and components thereof into the United States, or in their sale, by reason of alleged (1) infringement of complainant's Registered Trademark No. 640,640 for METALMASTER; (2) infringement of complainant's common law trademarks for the designations M-1, M-2, M-3; (3) misappropriation of trade dress; (4) false and deceptive advertising; (5) misrepresentation of source; (6) false designation of origin;

---

[1] The record is defined in § 207.2(i) of the Commission's Rules of Practice and Procedure (19 CFR 207.2(i)).

[2] Chairwoman Stern determines that there is a reasonable indication that a domestic industry is materially injured or threatened with material injury.

[3] Both cut-to-length and coiled carbon steel plate were included within the scope of the petition.

[4] Then Chairman Eckes indicated in additional views that he also found a reasonable indication of material injury to a regional industry.

[5] The reinitiated investigation covers only cut-to-length carbon steel plate. In its role as the administering authority for antidumping investigations, Commerce excluded coiled plate from the scope of the investigation on the basis that Gilmore does not produce that product.

and (7) passing off. The complaint further alleges that the effect or tendency of the unfair methods of competition and unfair acts is to destroy or substantially injure an industry, efficiently and economically operated, in the United States.

The complainant requests that the Commission institute an investigation and, after a full investigation, issue a permanent exclusion order and a permanent cease and desist order.

Authority: The authority for institution of this investigation is contained in section 337 of the Tariff Act of 1930 and in § 210.12 of the Commission's Rules of Practice and Procedure (19 CFR 210.12).

Scope of Investigation

Having considered the complaint, the U.S. International Trade Commission, on July 5, 1984, ordered that—

(1) Pursuant to subsection (b) of section 337 of the Tariff Act of 1930, an investigation be instituted to determine whether there is a violation of subsection (a) of section 337 in the unlawful importation of certain compound action metal cutting snips and components thereof into the United States, or in their sale, by reason of alleged (1) infringement of complainant's Registered Trademark No. 640,640 for METALMASTER; (2) infringement of complainant's common law trademarks for the designations M-1, M-2, and M-3; (3) misappropriation of trade dress; (4) false and deceptive advertising; (5) false representation; (6) false designation of geographic origin; (7) failure to mark country of origin and (8) passing off, the effect or tendency of which is to destroy or substantially injure an industry, efficiently and economically operated, in the United States.

(2) For the purposes of the investigation so instituted, the following are hereby named as parties upon which this notice of investigation shall be served:

(a) The complainant is—

Cooper Industries, Inc., First City Tower, Suite 4000, P.O. Box 4446, Houston, Texas 77210

(b) The respondents are the following companies, alleged to be in violation of section 337, and are the parties upon which the complaint is to be served:

Fedco International Inc., P.O. Box 84-252, Taipei, Taiwan

Home Chain Enterprise Co., Ltd., P.O. Box 58005, Taipei, Taiwan

Harko Industrial Co., Ltd., No. 2-44 E. Lane, Chinchum Chelu, P.O Box 1227, Taichung, Taiwan

U.S. General Supply Corp., 100 Commercial Street, Plainview, New York 11803

Homier Distributing Co., 1328 Etna Avenue, Huntington, Indiana 46750

Action Eagle, Inc., 307 Duke Lane, Santa Ana, California 92704

J&C Wholesale, 4903 North Grand River, Lansing, Michigan 48906

Coast Freight, 21100 Superior Street, Chatsworth, California 91311-4383

Jameson & Sons, 2 Viaduct Avenue, Downington, Pennsylvania 19335

Azco Tool Inc., P.O. Box 5339, Los Angeles, California 90014

(c) Patricia Ray, Esq., Unfair Import Investigations Division, U.S. International Trade Commission, 701 E Street NW., Room 125, Washington, D.C. 20436, shall be the Commission investigative attorney, a party to this investigation; and

(3) For the investigation so instituted, Donald K. Duvall, Chief Administrative Law Judge, U.S. International Trade Commission, shall designate the presiding officer.

Responses must be submitted to the named respondents in accordance with § 210.21 of the Commission's Rules of Practice and Procedure (19 CFR 210.21). Pursuant to §§ 201.16(d) and 210.21(a) of the rules, such responses will be considered by the Commission if received not later than 20 days after the date of service of the complaint. Extensions of time for submitting a response will not be granted unless good cause therefor is shown.

Failure of a respondent to file a timely response to each allegation in the complaint and in this notice may be deemed to constitute a waiver of the right to appear and contest the allegations of the complaint and this notice, and to authorize the presiding officer and the Commission, without further notice to the respondent, to find the facts to be as alleged in the complaint and this notice and to enter both an initial determination and a final determination containing such findings.

The complaint, except for any confidential information contained therein, is available for inspection during official business hours (8:45 a.m. to 5:15 p.m.) in the Office of the Secretary, U.S. International Trade Commission, 701 E Street NW., Room 156, Washington, D.C. 20436, telephone 202-523-0471.

FOR FURTHER INFORMATION CONTACT: Patricia Ray, Esq., Unfair Import Investigations Division, U.S. International Trade Commission, telephone 202-523-0440.

By order of the Commission.

Issued: July 9, 1984.

Kenneth R. Mason,

Secretary.

[FR Doc. 84-19012 Filed 7-17-84; 8:45 am]

BILLING CODE 7020-02-M

[Investigation No. 337-TA-175]

Certain Metal and Wire Shelf Products; Determination Not To Review Initial Determination Terminating the Investigation With Prejudice

AGENCY: U.S. International Trade Commission.

ACTION: The Commission has determined not to review an initial determination (ID) terminating the above-captioned investigation with prejudice.

Authority: 19 U.S.C. 1337, 19 CFR 210.51, 19n CFR 210.53.

SUPPLEMENTARY INFORMATION: On June 7, 1984, the presiding officer issued an ID granting complainant InterMetro Industries Corp.'s motion to terminate the investigation based on InterMetro's withdrawal of its complaint. However, in response to a request from respondents, the ID terminated the investigation with prejudice. On June 21, 1984, complainant filed a petition for review requesting that the Commission review the ID and terminate the investigation without prejudice.

FOR FURTHER INFORMATION CONTACT: William E. Perry, Esq., Office of the General Counsel, U.S. International Trade Commission, telephone 202-523-0499.

By Order of the Commission.

Issued: July 2, 1984.

Kenneth R. Mason,

Secretary.

[FR Doc. 84-19000 Filed 7-17-84; 8:45 am]

BILLING CODE 7020-02-M

[Investigation No. TA-201-50]

Report to the President; Nonrubber Footwear

July 9, 1984.

Determination

On the basis of the information developed in the course of investigation No. TA-201-50, the Commission has determined [1] that footwear, provided for

[1] Commissioner Veronica A. Haggart did not participate.

in items 700.05 through 700.45, inclusive, 700.56, 700.72 through 700.83, inclusive, and 700.95 of the Tariff Schedules of the United States, is not being imported into the United States in such increased quantities as to be a substantial cause of serious injury, or the treat thereof, to the domestic industry producing articles like or directly competitive with the imported articles.

Background

The Commission instituted the present investigation, No. TA-201-50, following the receipt, on January 23, 1984, of a petition for import relief filed on behalf of the Footwear Industries of America, Inc., Amalgamated Clothing and Textile Workers Union, AFL-CIO, and United Food & Commercial Workers International Union, AFL-CIO. The investigation was instituted pursuant to section 201(b) of the Trade Act of 1974 (19 U.S.C. 2251(b)) in order to determine whether footwear, provided for in items 700.05 through 700.45, inclusive, 700.56, 700.72 through 700.83, inclusive, and 700.95 of the Tariff Schedules of the United States, is being imported into the United States in such increased quantities as to be a substantial cause of serious injury, or the threat thereof, to the domestic industry producing articles like or directly competitive with the imported articles.

Notice of the institution of the Commission's investigation and of the public hearing to be held in connection therewith was given by posting copies of the notice in the Office of the Secretary, U.S. International Trade Commission, Washington, D.C., and by publishing the notice in the Federal Register of February 8, 1984 (49 FR 4857). The hearing was held in Washington, D.C., on May 2, 1984, and all persons who requested the opportunity were permitted to appear in person or through counsel.

This report is being furnished to the President in accordance with section 201(d)(1) of the Trade Act. The information in the report was obtained from fieldwork and interviews by members of the Commission's staff, from other Federal agencies, responses to Commission questionnaires, information presented at the public hearing, briefs submitted by interested parties, the Commission's files, and other sources.

The Commission transmitted its report on the investigation to the President on July 9, 1984. A public version of the Commission's report, Nonrubber Footwear (investigation No. TA-201-50, USITC Publication 1545, 1984), contains the views of the Commission and information developed during the investigation.

By order of the Commission.

Issued: July 9, 1984.

Kenneth R. Mason,

Secretary.

[FR Doc. 84-19015 Filed 7-17-84; 8:45 am]

BILLING CODE 7020-02-M

[Investigation No. 337-TA-198]

Certain Portable Electronic Calculators; Investigation

AGENCY: U.S. International Trade Commission.

ACTION: Institution of investigation pursuant to 19 U.S.C. 1337

SUMMARY: Notice is hereby given that a complaint and its supplements were filed with the U.S. International Trade Commission on June 8, June 28, and July 2, 1984, under section 337 of the Tariff Act of 1930 (19 U.S.C. 1337), on behalf of Texas Instruments Inc., 13500 North Central Expressway, Dallas, Texas 75265. The complaint as supplemented alleges unfair methods of competition and unfair acts in the importation of certain portable electronic calculators into the United States, or in their sale, by reason of alleged infringement of claims 1 and 6 of U.S. Letters Patent 3,819,921. The complaint further alleges that the effect or tendency of the unfair methods of competition and unfair acts is to destroy or substantially injure an industry, efficiently and economically operated, in the United States.

The complainant request the Commission to institute an investigation and, after a full investigation, to issue a permanent exclusion order and permanent cease and desist orders.

Authority: The authority for institution of this investigation is contained in section 337 of the Tariff Act of 1930 and in § 210.12 of the Commission's Rules of Practice and Procedure (19 CFR 210.12).

Scope of Investigation

Having considered the complaint, the U.S. International Trade Commission, on July 5, 1984, ordered that—

(1) Pursuant to subsection (b) of section 337 of the Tariff Act of 1930, an investigation be instituted to determine whether there is a violation of subsection (a) of section 337 in the unlawful importation of certain portable electronic calculators into the United States, or in their sale, by reason of alleged infringement of claims 1 and 6 of U.S. Letters Patent 3,819,921, the effect or tendency of which is to destroy or substantially injure an industry, efficiently and economically operated, in the United States.

(2) For the purpose of the investigation so instituted, the following are hereby named as parties upon which this notice of investigation shall be served:

(a) The complainant is—

Texas Instruments Inc., 13500 Central Expressway, Dallas, Texas 75265

(b) The respondents are the following companies, alleged to be in violation of section 337, and are the parties upon which the complaint is to be served:

Far East United Electronics Ltd., 171 Bun Hoi Road, Kwun Tong, Kowloon, Hong Kong

Fordstech Ltd., 4th Floor, Block C, Hop Hing Industrial Building, 702-A Castle Peak Road, G.P.O. Box 7295, Hong Kong

FLX (HK) Ltd:, Block 1, Flat E-J, 5/F Vigor Industrial Building Dallas, TA Chuen Ping Street, Upper Kwai Chung N.T., Kowloon, Hong Kong

Hua Chang Electronics Co. Ltd., Flat A, 6th Floor, Hua Yuan Bldg., 10-12 Stewart Road, Wanchai, Hong Kong

Integrated Display Technology Ltd., 9th Floor, Block E/E1, Kaiser Estate, 41 Man Yue Street, Hunghom, Kowloon, Hong Kong

MBO Far East (HK) Ltd., Room 514, 5th Floor, Tsimshatsui Centre, 66 Mody Road, Kowloon, Hong Kong

Mino Corp. Ltd., 13th Floor, Flat B, C & D, Mai Wah Industrial Building, 1-7 Wah Sing Street, Kwai Chung, Kowloon, Hong Kong

Promoters Ltd., International Industrial Building, 175 Hoi Bun Rd., 3/F & 11/F, Kwun Tong, Kowloon, Hong Kong

Success Electronics Co. Ltd., 32 Sand's St., 2nd F, Sun Bldg. West Point, Hong Kong

Dah Sun Electronics Co., Ltd., 7th Floor, Flat A on Loong Fty Bldg., 11-13 Luk Hop St., San Po Kong, Kowloon, Hong Kong

Luks Electronics Ltd., 5th F Lee Kee Commercial Bldg., 39-41 Sheung Heung Road, Kowloon, Hong Kong

RJP Electronics Ltd., 2nd F, Lee Kee Commerical Bldg., 223 Queen's Road Central Hong Kong

Tronica Electronic Engineering Co. Ltd., 6/8/9/12/14/15/F, Sang Hing Ind. Bldg., 83 Ta Chuen Ping St., Kwai Chung, N.T., Hong Kong

Nam Tai Electronics Co. Ltd., Kaiser Estate, 7th F, Block J. Phase 2, 51 Man Yue St., Hunghom, Kowloon, Hong Kong

Voesa Ltd., Room 1301 Tak Shing House, 20 Des Voeux Road Central, Hong Kong

General Electronics (KH) Ltd., Yuen Shing Industrial Bldg., 5/F, 64 Hoi Yuen Road, Kwun Tong, Hong Kong

APF Electronics, 43-28 37th Ave., Long Island City, New York 11101

International Merchandising Associates (IMA) Hong Kong, 3501 Woodherd Dr., Northbrook, Illinois 60062

Cosmo Corporation, 16502 N.W. 16 Court, Miami, Florida 33169

Enterprex, P.O Box 30508, Los Angeles, California 90030

Sears, Roebuck and Co., BSC 41-3, Chicago, Illinois 60684

(c) Denise T. DiPersio, Esq., Unfair Import Investigations Division, U.S. International Trade Commission, 701 E Street NW., Room 124, Washington, D.C. 20436, shall be the Commission investigative attorney, a party to this investigation; and

(3) For the investigation so instituted, Donald K. Duvall, Chief Administrative Law Judge, U.S. International Trade Commission, shall designate the presiding officer.

Responses must be submitted by the named respondents in accordance with § 210.21 of the Commission's Rules of Practice and Procedure (19 CFR 210.21). Pursuant to §§ 201.16(d) and 210.21(a) of the rules, such responses will be considerd by the Commission if received not later than 20 days after the date of service of the complaint. Extensions of time for submitting a response will not be granted unless good cause therefor is shown.

Failure of a respondent to file a timely response to each allegation in the complaint and in this notice may be deemed to constitute a waiver of the right to appear and contest the allegations of the complaint and this notice, and to authorize the presiding officer and the Commission, without further notice to the respondent, to find the facts to be as alleged in the complaint and this notice and to enter both an initial determination and a final determination containing such findings.

The complaint, except for any confidential information contained therein, is available for inspection during official business hours (8:45 a.m. to 5:15 p.m.) in the Office of the Secretary, U.S. International Trade Commission, 701 E Street NW., Room 156, Washington, D.C. 20436, telephone 202-523-0471.

FOR FURTHER INFORMATION CONTACT: Denise T. DiPersio, Esq., Unfair Import Investigations Division, U.S. International Trade Commission, telephone 202-523-0113.

By order of the Commission.

Issued: July 9, 1984.

Kenneth R. Mason,

Secretary.

[FR Doc. 84-19093 Filed 7-17-84; 8:45 am]

BILLING CODE 7020-02-M

[Investigation No. 731-TA-196 (Preliminary)]

Certain Red Raspberries From Canada

AGENCY: United States International Trade Commission.

ACTION: Institution of preliminary antidumping investigation and scheduling of a conference to be held in connection with the investigation.

EFFECTIVE DATE: July 5, 1984.

SUMMARY: The United States International Trade Commission hereby gives notice of the institution of investigation No. 731-TA-196 (Preliminary) under section 733(a) of the Tariff Act of 1930 (19 U.S.C. 1673b(a)) to determine whether there is a reasonable indication that an industry in the United States is materially injured, or is threatened with material injury, or the establishment of an industry in the United States is materially retarded, by reason of imports from Canada of fresh or frozen red raspberries provided for in items 146.54, 146.56, and 146.74 of the Tariff Schedules of the United States which are alleged to be sold in the United States at less than fair value.

FOR FURTHER INFORMATION CONTACT: Mr. Stephen A. Vastagh, Office of Investigations, U.S International Trade Commission, 701 E Street, NW., Washington, D.C. 20436, telephone 202-523-0283.

SUPPLEMENTARY INFORMATION:

Background

This investigation is being instituted in response to a petition filed on July 5, 1984, by the Washington Raspberry Commission, The Oregon Caneberry Commission, and the Red Raspberry Committee of the Northwest Food Processors' Association, which represent approximately 750 growers and approximately 40 packers of red raspberries in the United States. The Commission must make its determination in this investigation within 45 days after the date of the filing of the petition, or by August 20, 1984 (19 CFR § 207.17).

Participation

Persons wishing to participate in this investigation as parties must file an entry of appearance with the Secretary to the Commission, as provided in § 201.11 of the Commission's Rules of Practice and Procedure (19 CFR 201.11), not later than seven (7) days after the publication of this notice in the Federal Register. Any entry of appearance filed after this date will be referred to the Chairman, who shall determine whether to accept the late entry for good cause shown by the person desiring to file the entry.

Service of Documents

The Secretary will compile a service list from the entries of appearance filed in this investigation. Any party submitting a document in connection with the investigation shall, in addition to complying with § 201.8 of the Commission's rules (19 CFR 201.8), serve a copy of such document on all other parties to the investigation. Such service shall conform with the requirements set forth in § 201.16(b) of the rules (19 CFR 201.16(b)).

In addition to the foregoing, each document filed with the Commission in the course of this investigation must include a certificate of service setting forth the manner and date of such service. This certificate will be deemed proof of service of the document. Documents not accomplished by a certificate of service will not be accepted by the Secretary.

Written submission

Any person may submit to the Commission on or before July 31, 1984, a written statement of information pertinent to the subject matter of this investigation (19 CFR 207.15). A signed original and fourteen (14) copies of such statement must be submitted (19 CFR 201.8).

Any business information which a submitter desires the Commission to treat as confidential shall be submitted separately, and each sheet must be clearly marked at the top "Confidential Business Data." Confidential submissions must conform with the requirements of section 201.6 of the Commission's rules (19 CFR 201.6). All wirtten submissions, except for confidential business data will be available for public inspection.

Conference

The Director of Operations of the Commission has scheduled a conference in connection with this investigation for 9:30 a.m. on July 27, 1984, at the U.S. International Trade Commission Building, 701 E Street, NW., Washington, D.C. Parties wishing to participate in the conference should contact Stephen A. Vastagh (202-523-0283) or Lynn Featherstone (202-523-0242), not later than July 24, 1984, to arrange for their appearance. Parties in support of the imposition of antidumping duties in this investigation and parties in opposition to the imposition of such duties will each be collectively allocated one hour within which to make an oral presentation at the conference.

Public inspection

A copy of the petiton and all written submissions, except for confidential business data, will be available for public inspection during regular hours (8:45 a.m. to 5:15 p.m.) in the Office of the Secretary, U.S. International Trade Commission, 701 E Street, NW., Washington, D.C.

For further information concerning the conduct of this investigation and rules of general application, consult the Commission's Rules of Practice and Procuedure, parts 207, subpart A and B (19 CFR part 207), and part 201, subparts A through E (19 CFR part 201).

This notice is published pursuant to section 207.12 of the Commission's rules (19 CFR 207.12).

Issued: July 6, 1984.

Kenneth R. Mason,

Secretary.

[FR Doc. 84-19007 Filed 7-17-84; 8:45 am]

BILLING CODE 7020-02-M

[Investigation No. 337-TA-172]

Certain Shearing Machines; Extension of Deadlines for Completion of Hearing and Filing Initial Determination

AGENCY: U.S. International Trade Commission:

ACTION: Notice is hereby given that the Commission has extended the deadlines for completion of the evidentiary hearing and for filing the presiding officer's initial determination (ID) on violation of section 337 in the above-captioned investigation.

Authority: 19 U.S.C. 1337, 19 CFR 201.4(b).

SUPPLEMENTARY INFORMATION: On June 25, 1984, the presiding officer issued an order (Order No. 22) recommending that the Commission extend by 2 weeks the deadline for (1) completion of the evidentiary hearing and (2) filing an initial determination on violation of section 337 of the Tariff Act of 1930 (19 U.S.C. 1337) with the Commission. The presiding officer's order was issued in response to a motion of complainant and respondents. Those firms seek additional time in which to finalize a settlement agreement which is anticipated will form the basis for a motion to terminate the investigation.

FOR FURTHER INFORMATION CONTACT: Tim Yaworski, Esq., Office of the General Counsel, U.S. International Trade Commission, telephone 202-523-0311.

Issued: July 11, 1984.

By order of the Commission.

Kenneth R. Mason,

Secretary.

[FR Doc. 84-19013 Filed 7-17-84; 8:45 am]

BILLING CODE 7020-02-M

[Investigation No. 337-TA-161]

Certain Trolley Wheel assemblies; Decision To Review Initial Determination; Schedule for Filing Written Submissions on Violation and on Remedy, the Public Interest, and Bonding

AGENCY: U.S. International Trade Commission.

ACTION: Notice is hereby given that the Commission has determined to review the presiding officer's initial determinaiton that there is a violation of section 337 in the above-captioned investigation.

Authority: The authority for the Commission's disposition of this matter is contained in section 337 of the Tariff Act of 1930 (19 U.S.C. 1337) and in §§ 210.53-210.56 of the Commission's Rules of Practice and Procedure (47 FR 25134, June 10, 1982 and 48 FR 9242, Mar. 4, 1983; codified at 19 CFR 210.53-210.56).

SUPPLEMENTARY INFORMATION: On May 31, 1984, the presiding officer issued an initial determination that there is a violation of section 337 in the importation and sale of certain trolley wheel assemblies by respondent Bestar. The presiding officer found that respondents Sam Kwang Metal Inc. Co. and Sunkyong Ltd. had not violated section 337 and terminated the investigation with respect to them. (One other respondent, Tri-II, Inc., was terminated previously as a result of the issuance of a consent order, 49 FR 8504, Mar. 9, 1984). Complainant C. L. Frost & Son, Inc. petitioned for review of various parts of the initial determination pursuant to § 210.54(a) of the Commission's rules.

After considering the record in the investigation, including the initial determination and the petition for review, the Commission has concluded that there are issues which warrant review. Specifically, the Commission will review the following issues:

1. Whether there has been importation and sale of the infringing products either in the shipment of nine trolley wheel assemblies which had no commercial value or in the offer for sale of the infringing products which occurred outside the United States;

2. Whether to consider the imports of terminated respondent Tri-II, Inc. for the purpose of determining whether there is an effect or tendency to substantially injure the domestic industry; and

3. Whether there is an effect or tendency to substantially injure the domestic industry.

If the Commission finds that a violation of section 337 has occurred, it may issue (1) an order which could result in the exclusion of the subject articles from entry into the United States and/or (2) cease and desist orders which could result in one or more respondents being required to cease and desist from engaging in unfair acts in the importation and sale of such articles. Accordingly, the Commission is interested in receiving written submissions which address the form of relief, if any, which should be ordered.

If the Commission finds that a violation of section 337 has occurred and orders some form of relief, the President has 60 days to approve or disapprove the Commission's action. During this period, the subject articles would be entitled to enter the United States under a bond in an amount determined by the Commission and prescribed by the Secretary of the Treasury. The Commission is therefore interested in receiving briefs concerning the amount of the bond, if any, which should be imposed.

Public Interest Consideration

If the Commission concludes that a violation of section 337 has occurred and contemplates some form of relief, it must consider the effect of that relief upon the public interest. The factors which the Commission will consider include the effect that an exclusion order and/or cease and desist order would have upon (1) the public health and welfare, (2) competitive conditions in the U.S. economy, (3) the U.S. production of articles which are like or directly competitive with those which are the subject of the investigation, and (4) U.S. consumers.

Written Submissions

The parties to the investigation and interested Government agencies are encouraged to file briefs on the issues under review and on the issues of remedy, the public interest, and bonding. Complainant and the Commission investigative attorney are also requested to submit a proposed exclusion order and/or a proposed cease and desist order for the Commission's consideration. Persons other than the parties and Government agencies may file written submissions addressing the issues of remedy, the public interest, and bonding. Written submissions on the issues under review

must be filed not later than the close of business on July 16, 1984, and submissions on remedy, the public interest, and bonding must be filed not later than the close of business on July 23, 1984.

Additional Information

Persons submitting briefs and/or written submissions must file the original document and 14 true copies thereof with the Office of the Secretary on or before the deadlines stated above. Any person desiring to submit a document (or a portion thereof) to the Commission in confidence must request confidential treatment unless the information has already been granted such treatment by the presiding officer. All such requests should be directed to the Secretary of the Commission and must include a full statement of the reasons why the Commission should grant such treatment. Documents containing confidential information approved by the Commission for confidential treatment will be treated accordingly. All nonconfidential written submissions will be available for public inspection at the Secretary's Office.

Notice of this investigation was published in the Federal Register of August 29, 1983 (48 FR 39165–39166).

Copies of the nonconfidential version of the presiding officer's initial determination and all other nonconfidential documents filed in connection with this investigation are available for inspection during official business hours (8:45 a.m. to 5:15 p.m.) in the Office of the Secretary, U.S. International Trade Commission, 701 E street NW., Washington, D.C. 20436, Telephone 202–523–0161.

FOR FURTHER INFORMATION CONTACT: Brenda A. Jacobs, Esq., Office of the General Counsel, U.S. International Trade Commission, telephone 202–523–1627

Issued: July 2, 1984.

By order of the Commission.

Kenneth R. Mason,

Secretary.

[FR Doc. 84-18999 Filed 7-17-84; 8:45 am]

BILLING CODE 7020-02-M

[Investigation No. 337-TA-173]

Certain Valves; Initial Determination Terminating Respondents on the Basis of Settlement Agreement

AGENCY: U.S. International Trade Commission.

ACTION: Notice is hereby given that the Commission has received an initial determination from the presiding officer in the above-captioned investigation terminating the following respondents on the basis of a settlement agreement: Vanessa S.p.A. and Vanessa Valve Corporation.

SUPPLEMENTARY INFORMATION: This investigation is being conducted pursuant to section 337 of the Tariff Act of 1930 (19 U.S.C. 1337). Under the Commission's rules, the presiding officer's initial determination will become the determination of the Commission thirty (30) days after the date of its service upon the parties, unless the Commission orders review of the initial determination. The initial determination in this matter was served upon the parties on July 3, 1984.

Copies of the initial determination, the settlement agreement, and all other nonconfidential documents filed in connection with this investigation are available for inspection during official business hours (8:45 a.m. to 5:15 p.m.) in the Office of the Secretary, U.S. International Trade Commission, 701 E Street NW., Washington, D.C. 20436, telephone 202–523–0161.

Written Comments

Interested persons may file written comments with the Commission concerning termination of the aforementioned respondents. The original and 14 copies of all such comments must be filed with the Secretary to the Commission, 701 E Street NW., Washington, D.C. 20436, no later than 10 days after publication of this notice in the Federal Register. Any person desiring to submit a document (or portion thereof) to the Commission in confidence must request confidential treatment. Such requests should be directed to the Secretary to the Commission and must include a full statement of the reasons why confidential treatment should be granted. The Commission will either accept the submission in confidence or return it.

FOR FURTHER INFORMATION CONTACT: Ruby J. Dionne, Office of the Secretary, U.S. International Trade Commission, telephone 202–523–0176.

Issued: July 3, 1984.

By order of the Commission.

Kenneth R. Mason,

Secretary.

[FR Doc. 84-19001 Filed 7-17-84; 8:45 am]

BILLING CODE 7020-02-M

[Investigation No. 337-TA-173]

Certain Valves; Decision Not To Review Initial Determination Terminating Respondent the Valve Company

AGENCY: U.S. International Trade Commission.

ACTION: The Commission has determined not to review an initial determination (I.D.) terminating The Valve Co. as a respondent in this investigation.

Authority: Section 337 of the Tariff Act of 1930 (19 U.S.C. 1337) and §§ 210.53(c) and 210.53(h) of the Commission's Rules of Practice and Procedure (19 CFR 210.53 (c) and (h)).

SUPPLEMENTARY INFORMATION: The Commission has received neither a petition for review of the I.D. nor comments from Government agencies.

FOR FURTHER INFORMATION CONTACT: Carol McCue Verratti, Esq., Office of the General Counsel, U.S. International Trade Commission, telephone 202–523–0079.

Issued: July 3, 1984.

By order of the Commission.

Kenneth R. Mason,

Secretary.

[FR Doc. 84-19002 Filed 7-17-84; 8:45 am]

BILLING CODE 7020-02-M

[Investigation No. 337-TA-173]

Certain Valves; Decision Not To Review Initial Determination Terminating Respondent Associated Flow Controls, Inc.

AGENCY: U.S. International Trade Commission.

ACTION: The Commission has determined not to review an initial determination (I.D.) terminating Associated Flow Controls, Inc. as a respondent in this investigation.

Authority: Section 37 of the Tariff Act of 1930 (19 U.S.C. 1337) and §§ 210.53(c) and 210.53(h) of the Commission's Rules of Practice and Procedure (19 CFR 210.53 (c) and (h)).

SUPPLEMENTARY INFORMATION: The Commission has received neither a petition for review of the I.D. nor comments from Government agencies.

FURTHER INFORMATION CONTACT: Carol McCue Verratti, Esq., Office of the General Counsel, U.S. International Trade Commission, telephone 202–523–0079.

Issued: July 3, 1984.

By order of the Commission.

Kenneth R. Mason,

Secretary.

[FR Doc. 84-19003 Filed 7-17-84; 8:45 am]

BILLING CODE 7020-02-M

[Investigation No. 337-TA-75]

Certain Large Video Matrix Display Systems and Components Thereof; Extention of Time for Commission Decision on Whether To Order Review of Initial Determination

AGENCY: U.S. International Trade Commission.

ACTION: Notice is hereby given that the Commission has extended until July 27, 1984, the time by which it must decide whether to review the initial determination on violation of section 337 issued in the above-captioned investigation.

Authority: The authority for the Commission's disposition of this matter is contained in section 337 of the Tariff Act of 1930, 19 U.S.C. 1337, and in §§ 210.53-210.57, of the Commission's Rules of Practices and Procedure, 19 CFR 210.53-210.57, as amended by 48 FR 20226, 21115.

SUPPLEMENTARY INFORMATION: The initial determination concerning violation of section 337 was filed on June 13, 1984, and was served on the parties on June 14, 1984. In the absence of the extension of time, the time provided in the Commission's rules for deciding whether to order review of the initial determination would have expired on July 13, 1984.

Copies of the nonconfidential version of the initial determination and all other nonconfidential documents filed in connection with this investigation are available for inspection during official business hours (8:45 a.m. to 5:15 p.m.) in the Office of the Secretary, U.S. International Trade Commission, 701 E. Street NW., Washington, D.C. 20436, telephone 202-523-0161.

FOR FURTHER INFORMATION CONTACT: Catherine R. Field, Esq., Office of the General Counsel, U.S. International Trade Commission, 701 E Street, NW., Washington, D.C. 20436, telephone 202-523-0189.

By order of the Commission.

Issued: July 6, 1984.

Kenneth R. Mason,

Secretary.

[FR Doc. 84-19006 Filed 7-17-84; 8:45 am]

BILLING CODE 7020-02-M

[Investigation No. 337-TA-178]

Certain Vinyl-Covered Foam Blocks; Receipt of Initial Determination Terminating Respondent on the Basis of Consent Order Agreement

AGENCY: U.S. International Trade Commission.

ACTION: Notice is hereby given that the Commission has received an initial determination from the presiding officer in the above-captioned investigation terminating the following respondent on the basis of a consent order agreement: Talbot Toys, Inc.

SUPPLEMENTARY INFORMATION: This investigation is being conducted pursuant to section 337 of the Tariff Act of 1930 (19 U.S.C. 1337). Under the Commission's rules, the presiding officer's initial determination will become the determination of the Commission thirty (30) days after the date of its service upon the parties, unless the Commission orders review of the initial determination. The initial determination in this matter was served upon the parties on July 10, 1984.

Copies of the initial determiantion, the consent order agreement, and all other nonconfidential documents filed in connection with this investigation are available for inspection during official business hours (8:45 a.m. to 5:15 p.m.) in the Office of the Secretary, U.S. International Trade Commission, 701 E Street NW., Washington, DC 20436, telephone 202-523-0161.

Written Comments

Interested persons may file written comments with the Commission concerning termination of the aforementioned respondent. The original and 14 copies of all such comments must be filed with the Secretary to the Commission, 701 E Street NW., Washington, DC 20436, no later than 10 day after publication of this notice in the Federal Register. Any person desiring to submit a document (or portion thereof) to the Commission in confidence must request confidential treatment. Such requests should be directed to the Secretary to the Commission and must include a full statement of the reasons why confidential treatment should be granted. The Commission will either accept the submission in confidence or return it.

FOR FURTHER INFORMATION CONTACT: Ruby J. Dionne, Office of the Secretary, U.S. International Trade Commission, telephone 202-523-0176.

By order of the Commission.

Issued: July 10, 1984.

Kenneth R. Mason,

Secretary.

[FR Doc. 84-19010 Filed 7-17-84; 8:45 am]

BILLING CODE 7020-02-M

[Investigation No. 337-TA-178]

Certain Vinyl-Covered Foam Blocks

Notice is hereby given that the prehearing conference in this matter will commence at 9:00 a.m. on July 30, 1984, in Hearing Room 6311 at the Interstate Commerce Commission Building at 12th and Constitution Avenue, NW., Washington, D.C., and the hearing will commence immediately thereafter.

The Secretary shall publish this notice in the Federal Register.

Issued: July 9, 1984.

Janet D. Saxon,

Administrative Law Judge.

[FR Doc. 84-19011 Filed 7-17-84; 8:45 am]

BILLING CODE 7020-02-M

[Investigation No. 337-TA-183]

Indomethacin; Decision Not To Review Initial Determination Joining Respondent

AGENCY: U.S. International Trade Commission.

ACTION: The Commission has determined not to review an initial determination (I.D.) adding Mylan Pharmaceuticals, Inc. as a respondent in the above-captioned investigation.

Authority: Section 337 of the Tariff Act of 1930 (19 U.S.C. 1337) and §§ 210.53(c) and 210.53(h) of the Commission's Rules of Practice and Procedure (19 CFR 210.53(c) and 210.53(h)).

FOR FURTHER INFORMATION CONTACT: Phyllis Smithey, Esq., Office of the General Counsel, U.S. International Trade Commission, telephone 202-523-0321.

Issued: July 12, 1984.

By order of the Commission.

Kenneth R. Mason,

Secretary.

[FR Doc. 84-19016 Filed 7-17-84; 8:45 am]

BILLING CODE 7020-02-M

[Investigation No. 337-TA-152]

Certain Plastic Food Storage Containers; Issuance of Exclusion Order and Cease and Desist Orders

AGENCY: U.S. International Trade Commission.

ACTION: Issuance of exclusion order and cease and desist orders.

Authority: 19 U.S.C. 1337(d) and (f).

SUPPLEMENTARY INFORMATION: On July 13, 1984, the Commission issued an exclusion order, limited to the respondents in the investigation (Jui Feng Plastic Mfg. Co., Ltd., Famous Associates, Inc., Lamarle Hong Kong, Ltd., Internation Porcelain, Inc.; d/b/a International Sources; Peter Marcer; Morris A. Lauterman; David Y. Lei; David Y. Lei, Morris A. Lauterman, Peter Marcar d/b/a Lamarle; Lamarle, Inc., Lamarle B. V., and Griffith Bros. Ltd.), that packaging for plastic food storage containers bearing the trademarks "Tupperware," "Wonderlier," "Handolier," and/or "Classic Sheer" be excluded from entry into the United States unless licensed by Dart Industries, Inc., owner of the trademarks. The Commission further issued a cease and desist order to each respondent directing the respondent to cease and desist in the United States from infringement of the trademarks, false designation of source, passing off, and false advertising.

FOR FURTHER INFORMATION CONTACT: Jack Simmons, Esq., Office of the General Counsel, telephone 202-523-0493.

Issued: July 13, 1984.

By order of the Commission.

Kenneth R. Mason,

Secretary.

[FR Doc. 84-19019 Filed 7-17-84; 8:45 am]

BILLING CODE 7020-02-M

[Investigation No. 337-TA-185]

Certain Rotary Wheel Printing System; Decision Not To Review Initial Determination Joining Respondents

AGENCY: U.S. International Trade Commission.

ACTION: Notice is hereby given that the Commission has determined not to review the presiding officer's initial determination (ID) (Order No. 13) to amend the complaint and the notice of investigation by joining Towa San Kiden Corp., Primages, Inc., and Primages, Inc. (Taiwan), as respondents in the above-captioned investigation.

Authority: 19 U.S.C. 1337; 19 CFR 210.22 and 210.53.

SUPPLEMENTARY INFORMATION: On May 10, 1984, complainant Qume Corporation, moved (Motion No. 185-14) to amend the complaint and notice of investigation by joining Towa San Kiden Corp., Primages, Inc., and Primages, Inc. (Taiwan), as respondents.

On June 8, 1984, the presiding officer issued an ID granting the motion, with the exception of paragraphs 10-13. No petitions for review or agency comments were received.

Copies of the presiding officer's initial determination and all other nonconfidential documents filed in connection with this investigation are available for inspection during official business hours (8:45 a.m. to 5:15 p.m.) in the Office of the Secretary, U.S. International Trade Commission, 701 E Street NW., Washington, D.C. 20436, telephone 202-523-0161.

FOR FURTHER INFORMATION CONTACT:

Dawn Busby, Office of the General Counsel, U.S. International Trade Commission, telephone 202-523-1693.

By order of the Commission.

Issued: July 13, 1984.

Kenneth R. Mason,

Secretary.

[FR Doc. 84-19017 Filed 7-17-84; 8:45 am]

BILLING CODE 7020-02-M

[Investigations Nos. 731-TA-161 and 162 (Final)]

Titanium Sponge From Japan and the United Kingdom

AGENCY: United States International Trade Commission.

ACTION: Rescheduling of the hearing to be held in connection with the subject investigations.

EFFECTIVE DATE: June 27, 1984.

SUMMARY: The Commission hereby announces the rescheduling of the hearing to be held in connection with these investigations from 10:00 a.m. on August 2, 1984, to 10:00 a.m., on September 26, 1984.

FOR FURTHER INFORMATION CONTACT: Cynthia Wilson (202-523-0291), Office of Investigations, U.S. International Trade Commission.

SUPPLEMENTARY INFORMATION:

Background

On May 11, 1984, the Commission instituted these final antidumping investigations involving titanium sponge from Japan and the United Kingdom and scheduled a hearing to be held in connection with the investigations for August 2, 1984 (49 FR 22724, May 31, 1984). Subsequently, the Department of Commerce extended the date for its final determinations in the investigations from July 23, 1984, to September 24, 1984. The Commission, therefore, is revising its schedule in the investigations to conform with Commerce's new schedule. Pursuant to section 735(b)(2)(B) of the Tariff Act of 1930 (19 U.S.C. 1673d(b)(2)(B)), the Commission must make its final determinations within 45 days of Commerce's final determinations, or in this case by November 7, 1984.

Staff Report

A public version of the staff report containing preliminary findings of fact in these investigations will be placed in the public record on September 14, 1984, pursuant to § 207.21 of the Commission's Rules (19 CFR 207.21).

Hearing

The hearing in connection with these investigations will begin at 10:00 a.m. on Spetember 26, 1984, at the U.S. International Trade Commission Building, 701 E Street NW., Washington, D.C. Requests to appear at the hearing should be filed in writing with the Secretary to the Commission not later than the close of business (5:15 p.m.) on September 17, 1984. All persons desiring to appear at the hearing and make oral presentations should file prehearing briefs and attend a prehearing conference to be held at 10:00 a.m. on September 20, 1984, in room 117 of the U.S. International Trade Commission Building. The deadline for filing prehearing briefs is September 24, 1984.

Testimony at the public hearing is governed by § 207.23 of the Commission's rules (19 CFR 207.23). This rule requires that testimony be limited to a nonconfidential summary and analysis of material contained in prehearing briefs and to information not available at the time the prehearing brief was submitted. All legal arguments, economic analyses, and factual materials relevant to the public hearing should be included in prehearing briefs in accordance with § 207.22 (19 CFR 207.22). Posthearing briefs must conform with provisions of § 207.24 (19 CFR 207.24) and must be submitted not later than the close of business on October 5, 1984.

Written Submissions

As mentioned, parties to these investigations may file prehearing and posthearing briefs by the dates shown above. In addition, any person who has not entered an appearance as a party to the investigations may submit a written statement of information pertinent to the subject of the investigations on or before October 5, 1984. A signed original and fourteen (14) true copies of each submission must be filed with the

Secretary to the Commission in accordance with § 201.8 of the Commission's rules (19 CFR 201.8). All written submissions except for confidential business data will be available for public inspection during regular business hours (8:45 a.m. to 5:15 p.m.) in the Office of the Secretary to the Commission.

Any business information for which confidential treatment is desired shall be submitted separately. The envelope and all pages of such submissions must be clearly labeled "Confidential Business Information." Confidential submissions and requests for confidential treatment must conform with the requirements of § 201.6 of the Commission's rules (19 CFR 201.6).

For further information concerning the conduct of the investigations, hearing procedures, and rules of general application, consult the Commission's Rules of Practice and Procedure, part 207, Subparts A and C (19 CFR Part 207), and Part 201, subparts A through E (19 CFR Part 201).

This notice is published pursuant to section 207.20 of the Commission's rules (19 CFR 207.20).

By order of the Commission.

Issued: July 13, 1984.

Kenneth R. Mason,

Secretary.

[FR Doc. 84-19018 Filed 7-17-84; 8:45 am]

BILLING CODE 7020-02-M

INTERSTATE COMMERCE COMMISSION

[Ex Parte No. 388; Sub-20]

Intrastate Rail Rate Authority; New Hampshire

AGENCY: Interstate Commerce Commission.

ACTION: Notice of decision.

SUMMARY: The Commission grants final certification to the Public Utility Commission of New Hampshire under 49 U.S.C. 11501(b) to regulate intrastate rail transportation, subject to a condition precedent that it modify its standards and procedures as noted in the full decision.

DATE: If the necessary changes are made, certification will begin August 17, 1984.

FOR FURTHER INFORMATION CONTACT: Louis E. Gitomer (202) 275-7245.

SUPPLEMENTARY INFORMATION: Additional information is contained in the Commission's decision. To purchase a copy of the full decision write to T.S. InfoSystems, Inc., Room 2227, Interstate Commerce Commission, Washington, DC 20423, or call 289-4357 (DC Metropolitan area) or toll free (800) 424-5403.

Dated: July 11, 1984.

By the Commission, Chairman Taylor, Vice Chairman Andre, Commissioners Sterrett and Gradison.

James H. Bayne,

Secretary.

[FR Doc. 84-18978 Filed 7-17-84; 8:45 am]

BILLING CODE 7035-01-M

MERIT SYSTEMS PROTECTION BOARD

Call for Riders for The Digest

AGENCY: Merit Systems Protection Board.

ACTION: Notice of call for riders for *The Digest* for fiscal year 1985.

SUMMARY: The purpose of this notice is to inform Federal agencies that the Merit Systems Protection Board publication, *The Digest,* will be available for fiscal year 1985 on riders to the Government Printing Office. Departments and agencies may order this monthly publication by riding the Merit Systems Protection Board's printing requisition #5-00043.

DATE: Agency requisitions (Standard Form 1) must be submitted no later than August 31, 1984.

ADDRESS: Interested departments and agencies should send requisitions—through their Washington, D.C. headquarters office authorized to procure printing—to the Government Printing Office, Requisitions section, Room 836, Washington, D.C. 20401. Agencies may estimate cost by using the current Government Printing Office price list of printing services.

FOR FURTHER INFORMATION CONTACT: Karen S. Henkel, Information Services Division, Office of the Secretary, Room 818, 1120 Vermont Avenue, NW., Washington, D.C. 20419, 202/653-8894.

SUPPLEMENTARY INFORMATION: *The Digest* is a monthly publication containing summaries of selected Board orders and a list of all other Board orders issued each month. The orders are indexed according to the Board's key number system, which indicates the subject matter discussed in the orders. *The Digest* also summarizes decisions made in the Board's regional offices under the voluntary expedited appeals procedure and selected court cases, and reprints the Board's Federal Register issuances.

For the Board.

Dated: July 13, 1984.

Herbert E. Ellingwood,

Chairman.

[FR Doc. 84-18932 Filed 7-17-84; 8:45 am]

BILLING CODE 7400-01-M

NATIONAL FOUNDATION ON THE ARTS AND THE HUMANITIES

National Council on the Humanities Advisory Committee; Meeting

July 12, 1984.

Pursuant to the provisions of the Federal Advisory Committee Act (Pub. L. 92-463, as amended) notice is hereby given that a meeting of the National Council on the Humanities will be held in Washington, D.C. On August 9-10, 1984.

The purpose of the meeting is to advise the Chairman of the National Endowment for the Humanities with respect to policies, programs, and procedures for carrying out his functions, and to review applications for financial support and gifts offered to the Endowment and to make recommendations thereon to the Chairman.

The meeting will be held in the Old Post Office Building, 1100 Pennsylvania Avenue, NW., Washington, D.C. A portion of the morning and afternoon sessions on August 9, 1984 and the afternoon session on August 10, 1984 will not be open to the public pursuant to subsections (c)(4), (6) and (9)(B) of section 552b of Title 5, United States Code because the Council will consider information that may disclose: Trade secrets and commercial or financial information obtained from a person and privileged or confidential; information of a personal nature the disclosure of which will constitute a clearly unwarranted invasion of personal privacy; and information the disclosure of which would significantly frustrate implementation under the authority granted me by the Chairman's Delegation of Authority dated January 15, 1978.

The agenda for the sessions on August 9, 1984 will be as follows:

(Open to the Public)

8:30 a.m.-9:30 a.m.—Coffee for Council Members—Room 502

9:30 a.m.-10:30 a.m.—Committee Meetings—Policy Discussion

Education & State Programs—Room M-14

Fellowship Programs—Room 315

General Programs—Room 415

Research Programs—Room 316-2

10:30—Adjourn—(Closed to the Public)

Committee Meetings (continued)—
Consideration of specific applications
5:00 p.m.–5:30 p.m.—(Closed to the Public)
Challenge Grant Committee Meeting to discuss specific grant applications before the council—Room 430

The morning session on August 10, 1984 will convene at 8:30 a.m. in the 1st Floor Council Room M–09 and will be open to the public. The agenda for the morning session will be as follows: (Coffee for Staff and Council Attending Meeting will be served from 8:30 a.m.–9:00 a.m.)

Minutes of the Previous Meeting

Reports
A. Introductory Remarks
B. Introduction of New Staff
C. Contracts Awarded in the Previous Quarter
D. Conflicts of Interest Resolution
E. Committee Reports on Policy and General Matters
a. Challenge Grants
b. State Programs
c. General Programs
d. Research Programs
e. Fellowship Programs
f. Education Programs
F. Application Report and Gifts and Matching Report
G. Status of FY 1984 Program Funds and Status of FY 1985 Appropriation Request
H. FY 1986 Budget Planning

The remainder of the proposed meeting will be given to the consideration of specific applications (closed to the public for the reasons stated above).

Further information about this meeting can be obtained from Mr. Stephen J. McCleary, Advisory Committee Management Officer, Washington, D.C. 20506, or call area code 202–786–0322.

Stephen J. McCleary,
Advisory Committee Management Officer.

[FR Doc. 84–19038 Filed 7–17–84; 8:45 am]
BILLING CODE 7536–01–M

NATIONAL SCIENCE FOUNDATION

Adoption of New Policies on Copyrightable Material and Income, Availability of Draft Implementing Material, and Request for Comments

AGENCY: National Science Foundation.

ACTION: Notice of Adoption of New Policies on Copyrightable Material and Income, Notice of the Availability of Draft Implementing Material, and Request for Comments.

SUMMARY: This notice sets forth recently-adopted policies on rights to and income from copyrightable material created under NSF grants and contracts, indicates how copies of draft award clauses and internal procedures implementing those policies may be obtained, and requests comments on both of these.

DATE: Comments received before September 17, 1984 will be considered in preparation of final implementation material.

ADDRESS: Requests for copies of background and implementation materials and comments on the newly-adopted policies or the proposed implementation of them should be sent to: John Chester, Intellectual Property Attorney, Office of the General Counsel National Science Foundation, Washington, DC 20550, 202–357–9447 (this is not a toll-free number).

FOR FURTHER INFORMATION CONTACT: John Chester, Intellectual Property Attorney, Office of the General Counsel National Science Foundation, Washington, DC 20550, 202–357–9447 (this is not a toll-free number).

SUPPLEMENTARY INFORMATION: The following principles governing the treatment of copyrightable material produced under NSF awards were adopted by the National Science Board on March 16, 1984.

I. The Foundation normally will acquire only such rights to copyrightable material as are needed to achieve its purposes or to comply with the requirement of any applicable Government-wide policy or international agreement.

II. To preserve incentives for private dissemination and development, the Foundation normally will not restrict or take any part of income earned from copyrightable material except as necessary to comply with the requirements of any applicable Government-wide policy or international agreement.

III. In exceptional circumstances, the Foundation may restrict or eliminate an awardee's control of NSF-supported copyrightable material and of income earned from it, if the Foundation determines that this would best serve the purposes of a particular program or award.

Adoption of these three principles and repeal of a 1969 policy governing educational materials are intended to bring the Foundation into compliance with OMB Circular A–110, "Uniform Administrative Requirements for Grants and Agreements with Institutions of Higher Education, Hospitals, and Other Nonprofit Organizations"

Implementation of these principles will eliminate: (1) A $10,000 "cap" on royalty income retained by NSF grantees, (2) disparate treatment of Science and Engineering Education grants, and (3) special restrictions on NSF-supported software and databases.

Copies of background materials, draft and award clauses, and draft internal procedures implementing these principles may be obtained from the address above.

The Foundation has determined that these principles and implementing material do not constitute a major rule as defined in Executive Order 12291 of February 17, 1981 (3 CFR 1981 Comp., p. 127).

Dated: July 12, 1984.

John Chester,
Intellectual Property Attorney.

[FR Doc. 84–19070 Filed 7–17–84; 8:45 am]
BILLING CODE 7555–01–M

NUCLEAR REGULATORY COMMISSION

[Docket Nos. 50–282 and 50–306]

Northern States Power Co.; Environmental Assessment and Finding of no Significant Impact

The U.S. Nuclear Regulatory Commission (the Commission) is considering issuance of an exemption from the requirements of Appendix R to 10 CFR Part 50 to Northern States Power Company (the licensee), for the Prairie Island Nuclear Generating Plant, Unit Nos. 1 and 2, located in Goodhue County, Minnesota.

Environmental Assessment

Identification of Proposed Action

The exemption would relax the requirement that there be no intervening combustibles between redundant safe shutdown equipment in the containments for each unit. The exemption would also relax the requirement that any oil leakage from the Reactor Coolant Pumps must be drained to a closed vented container. The leakage would first be drained to a sump from which it would be pumped to a closed vented container.

The exemption is responsive to the licensee's application for exemption dated January 23, 1984, as supplemented by letters dated April 5 and May 22, 1984.

The Need for the Proposed Action

The proposed exemption is needed because the features described in the licensee's request regarding the existing

fire protection at their plant for these items are the most practical method for meeting the intent of Appendix R and literal compliance would not significantly enhance the fire protection capability.

Environmental Impacts of the Proposed Action

The proposed exemption will provide a degree of fire protection that is equivalent to that required by Appendix R for other areas of the plant such that there is no increase in the risk of fires at these facilities. Consequently, the probability of fires has not been increased and the post-fire radiological releases will not be greater than previously determined nor does the proposed exemption otherwise affect radiological plant effluents. Therefore, the Commission concludes that there are no significant radiological environmental impacts associated with this proposed exemption.

With regard to potential non-radiological impacts, the proposed exemption involves features located entirely within the restricted area as defined in 10 CFR Part 20. It does not affect non-radiological plant effluents and has no other environmental impact. Therefore, the Commission concludes that there are no significant non-radiological environmental impacts associated with the proposed exemption.

Alternative Use of Resources

This action involves no use of resources not previously considered in the Final Environmental Statement (construction permit and operating license) for the Prairie Island Nuclear Generating Plant, Unit Nos. 1 and 2.

Agencies and Persons Consulted

The NRC staff reviewed the licensee's request and did not consult other agencies or persons.

Finding of no Significant Impact

The Commission has determined not to prepare an environmental impact statement for the proposed exemption.

Based upon the foregoing environmental assessment, we conclude that the proposed action will not have a significant effect on the quality of the human environment.

For further details with respect to this action, see the application for the exemption dated January 23, 1984, and supplements dated April 5 and May 22, 1984, which are available for public inspection at the Commission's Public Document Room, 1717 H Street, NW., Washington, D.C., and at the Environmental Conservation Library, Minneapolis Public Library, 300 Nicollet Mall, Minneapolis, Minnesota.

Dated at Bethesda, Maryland this 12th day of July, 1984.

For the Nuclear Regulatory Commission.

Darrell G. Eisenhut,

Director, Division of Licensing, Office of Nuclear Reactor Regulation.

[FR Doc. 84-18983 Filed 7-17-84; 8:45 am]

BILLING CODE 7590-01-M

Regulatory Guides; Issuance, Availability

The Nuclear Regulatory Commission has issued revisions to two guides in its Regulatory Guide Series. This series has been developed to describe and make available to the public methods acceptable to the NRC staff of implementing specific parts of the Commission's regulations and, in some cases, to delineate techniques used by the staff in evaluating specific problems or postulated accidents and to provide guidance to applicants concerning certain of the information needed by the staff in its review of applications for permits and licenses.

Regulatory Guide 1.84, Revision 22, "Design and Fabrication Code Case Acceptability, ASME Section III, Division 1," and Regulatory Guide 1.85, Revision 22, "Materials Code Case Acceptability, ASME Section III, Division 1," list those code cases that are generally acceptable to the NRC staff for implementation in the licensing of light-water-cooled nuclear power plants. These two guides are peridoically revised to update the listings of acceptable code cases and to include the results of public comment and additional staff review.

Comments and suggestions with (1) items for inclusion in guides currently being developed or (2) improvements in all published guides are encouraged at any time. Comments should be sent to the Secretary of the Commission, U.S. Nuclear Regulatory Commission, Washington, D.C. 20555, Attention: Docketing and Service Branch.

Regulatory guides are available for inspection at the Commission's Public Document Room, 1717 H Street NW, Washington, D.C. Copies of active guides may be purchased at the current Government Printing Office price. A subscription service for future guides in specific divisions is available through the Government Printing Office. Information on the subscription service and current prices may be obtained by writing to the U.S. Nuclear Regulatory Commission, Washington, D.C. 20555, Attention: Publication Sales Manager.

95 U.S.C. 552(a))

Dated at Silver Spring, Maryland this 11th day of July 1984.

For the Nuclear Regulatory Commission.

Robert B. Minogue,

Director, Office of Nuclear Regulatory Research.

[FR Doc. 84-18984 Filed 7-17-84; 8:45 am]

BILLING CODE 7590-01-M

Advisory Committee on Reactor Safeguards, Subcommittee on Emergency Core Cooling Systems; Meeting

The ACRS Subcommittee on Emergency Core Cooling Systems will hold a meeting on July 31, 1984, in Room 1046, 1717 H Street, NW, Washington, DC.

Most of the meeting will be open to public attendance. However, a portion of the meeting will be closed to prevent disclosure of information the premature disclosure of which would be likely to significantly frustrate implementation of a proposed Commission action (SUNSHINE ACT EXEMPTION 9B). In order to receive and consider this information, the ACRS must be able to engage in frank discussion with representatives of the NRC Staff. For the reason just stated, such a discussion would not be possible if held in public session.

The agenda for subject meeting shall be as follows: *Tuesday, July 31, 1984—8:30 a.m. until the conclusion of business.*

The Subcommittee will discuss the following items:

(1) NRC Staff plans to designate generic issue B-23, "Reactor Coolant Pump Seal Failure" as an Unresolved Safety Issue; (2) the status of the thermal hydraulic program in support of the PTS issue; (3) the status of Yankee Atomic Electric's decay heat exemption request; (4) the status of SBLOCA model revisions; (5) the status of the RCP trip issue; (6) the status of ECCS Upper Plenum EM Model revision; (7) the impact on BWR ECCS given a loss of control rod guide stub tube integrity; (8) the status of the RES Appendix K revision effort; and (9) the status of the NRC RES supported international 2D/3D research program (closed session).

Oral statements may be presented by members of the public with concurrence of the Subcommittee Chariman; written statements will be accepted and made available to the Committee. Recordings will be permitted only during those portions of the meeting when a transcript is being kept, and questions may be asked only by members of the

Subcommittees, their consultants, and Staff. Persons desiring to make oral statements should notify the ACRS staff member named below as far in advance as practicable so that appropriate arrangements can be made.

During the initial portion of the meeting, the Subcommittee, along with any of its consultants who may be present, may exchange preliminary views regarding matters to be considered during the balance of the meeting.

The Subcommittee will then hear presentations by and hold dicussions with representatives of the NRC Staff, their respective consultants, and other interested persons regarding this review.

Further information regarding topics to be discussed, whether the meeting has been cancelled or rescheduled, the Chairman's ruling on requests for the opportunity to present oral statements and the time allotted therefore can be obtained by a prepaid telephone call to the cognizant ACRS staff member, Mr. Paul Boehnert (telephone 202/634-3267) between 8:15 a.m. and 5:00 p.m., EDT.

Dated: July 13, 1984.

Morton W. Libarkin,

Assistant Executive Director for Project Review.

[FR Doc. 84-18982 Filed 7-17-84; 8:45 am]

BILLING CODE 7590-01-M

OFFICE OF PERSONNEL MANAGEMENT

Federal Prevailing Rate Advisory Committee; Open Meeting

Pursuant to the provisions of section 10 of the Federal Advisory Committee Act (Pub. L. 92-463), notice is hereby given that meetings of the Federal Prevailing Rate Advisory Committee will be held on:

Thursday, August 2, 1984
Thursday, August 9, 1984
Thursday, August 16, 1984
Thursday, August 23, 1984
Thursday, August 30, 1984

These meetings will convene at 10 a.m. and will be held in Room 5A06A, Office of Personnel Management Building, 1900 E Street, NW., Washington, D.C.

The Federal Prevailing Rate Advisory Committee is composed of a Chairman, representatives of five labor unions holding exclusive bargaining rights for Federal blue-collar employees, and representatives of five Federal agencies. Entitlement to membership of the Committee is provided for in 5 U.S.C. 5347

The Committee's primary responsibility is to review the prevailing rate system and other matters pertinent to the establishment of prevailing rates under subchapter IV, chapter 53, 5 U.S.C., as amended, and from time to time advise the Office of Personnel Management thereon.

These scheduled meetings will convene in open session with both labor and management representatives attending. During the meeting either the labor members or the management members may caucus separately with the Chairman to devise strategy and formulate positions. Premature disclosure of the matters discussed in these caucuses would impair to an unacceptable degree the ability of the Committee to reach a consensus on the matters being considered and disrupt substantially the disposition of its business. Therefore, these caucuses will be closed to the public on the basis of a determination made by the Director of the Office of Personnel Management under the provisions of Section 10(d) of the Federal Advisory Committee Act (Pub. L. 463) and 5 U.S.C. 552(c)(9)(B). These caucuses may, depending on the issues involved, constitute a substantial portion of the meeting.

Annually the Committee publishes for the Office of Personnel Management, the President, and Congress a comprehensive report of pay issues discussed, concluded recommendations thereon, and related activities. These reports are also available to the public, upon written request to the Committee Secretary.

Members of the public are invited to submit material in writing to the Chairman concerning Federal Wage System pay matters felt to be deserving of the Committee's attention. Additional information concerning these meetings may be obtained by contacting the Committee Secretary, Federal Prevailing Rate Advisory Committee, Room 1340, 1900, E Street, NW., Washington, D.C. 20415 (202) 632-9710.

William B. Davidson, Jr.,

Chairman, Federal Prevailing Rate Advisory Committee.

July 9, 1984.

[FR Doc. 84-18915 Filed 7-17-84; 8:45 am]

BILLING CODE 6325-01-M

POSTAL RATE COMMISSION

[Docket No. MC84-1]

Mail Classification Schedule, 1984 Special Fourth-Class Mail; Rescheduling Prehearing Conference

Issued: July 13, 1984.

A Notice of Prehearing Conference, issued July 10, 1984, scheduled a prehearing conference in this docket for July 26, 1984. As a result of the length of oral argument in Docket No. R84-1, it is necessary to reschedule the prehearing conference in this case for Wednesday, July 25, 1984, at 10:00 a.m.

By the Commission.

Charles L. Clapp,

Secretary.

[FR Doc. 84-19034 Filed 7-17-84; 8:45 am]

BILLING CODE 7715-01-M

SECURITIES AND EXCHANGE COMMISSION

[Release No. 23363; 70-6993]

Louisiana Power & Light Co.; Proposed Issuance and Sale of First Mortgage Bonds

July 10, 1984.

Louisiana Power & Light Company ("LP&L"), 142 Delaronde Street, New Orleans, LA 70174, an electric utility subsidiary of Middle South Utilities, Inc., a registered holding company, has filed a declaration with this Commission pursuant to Sections 6(a) and 7 of the Public Utility Holding Company Act of 1935 ("Act") and Rule 50 promulgated thereunder.

LP&L proposes to issue and sell not more than $200,000,000 in principal amount of its first mortgage bonds to be issued in one or more series from time to time not later than August 31, 1985. The bonds are to be issued under the company's Mortgage and Deed of Trust, dated as of April 1, 1944, to The Chase Manhattan Bank (National Association), as Trustee, as heretofore supplemented and as to be further supplemented. Each series of the bonds will mature not earlier than five years and not later than thirty years from the first day of the month of issuance. LP&L intends to use the net proceeds derived from the issuance and sale of the bonds for the financing in part of the company's construction program, for the payment in part of short-time borrowings effected to finance temporarily and in part the company's construction program, and for other corporate purposes.

LP&L intends to sell the bonds by competitive bidding using alternative procedures authorized in HCAR No. 22623 (September 2, 1982). Depending on market conditions, however, it is represented that LP&L may seek an exception from the requirements of Rule 50 in order to offer the bonds through a negotiated public sale(s) or private sale(s).

The declaration and any amendments thereto are available for public

inspection through the Commission's Office of Public Reference. Interested persons wishing to comment or request a hearing should submit their views in writing by August 6, 1984, to the Secretary, Securities and Exchange Commission, Washington, D.C. 20549, and serve a copy on the declarant at the address specified above. Proof of service (by affidavit or, in case of an attorney at law, by certificate) should be filed with the request. Any request for a hearing shall identify specifically the issues of fact or law that are disputed. A person who so requests will be notified of any hearing, if ordered, and will receive a copy of any notice or order issued in this matter. After said date, the declaration, as amended or as it may be further amended, may be permitted to become effective.

For the Commission, by the Office of Public Utility Regulation, pursuant to delegated authority.

Shirley E. Hollis,

Assistant Secretary.

[FR Doc. 84-18946 Filed 7-17-84; 8:45 am]

BILLING CODE 8010-01-M

[Release No 23365; 70-6995]

New England Electric System; Proposed Issuance and Sale of Common Stock Pursuant to an Employees' Tax Deferred Savings Plan and Request For Exception From Competitive Bidding

July 12, 1984.

New England Electric System ("NEES"), 25 Research Drive, West Borough, MA 01581, a registered holding company, has filed a declaration with this Commission pursuant to Section 6(a) and 7 of the Public Utility Holding Company Act of 1935 ("Act") and Rule 50(a)(5) promulgated thereunder.

NEES and its subsidiaries intend to establish The New England Electric System Companies Tax Deferred Savings Plan ("Plan"). The purpose of the Plan is to encourage employee savings. Eligible employees may elect to have all or a portion of their salary reduction contributions invested in, among other investment alternatives, NEES common shares. For this purpose, NEES proposes to issue and sell through December 31, 1988, a maximum of 200,000 shares of its authorized but unissued common shares, $1 par value, pursuant to the Plan. No employer contributions will be made under the Plan other than those made on behalf of participants through salary reduction. NEES common shares purchased under the Plan will generally come from authorized but unissued common shares. NEES reserves the right, however, to instruct the Trustee to purchase NEES shares on the open market. The price of NEES common shares purchased from NEES will be based upon the average of the high and low prices of NEES common shares on the New York Stock Exchange-Composite Transactions as reported in the Wall Street Journal for the five consecutive trading days ending with the applicable investment date. Each participant or beneficiary shall have the right to direct the Trustee how to exercise the voting rights with respect to all the whole and fractions of NEES common shares allocated to his account. The Trustee shall vote shares for which it does not receive voting instructions in the same proportions as it votes the shares held by it under the Plan for which it does receive such instructions.

The proceeds from the sale of common shares will be added to the general funds of NEES and will be used for any or all of the following purposes: (i) investment in the subsidiaries through loans to such subsidiaries, purchases of additional shares of their capital stocks, or capital contributions, (ii) payment of indebtedness of NEES, or (iii) corporate purposes of NEES.

The declaration and any amendments thereto are available for public inspection through the Commission's Office of Public Reference. Interested persons wishing to comment or request a hearing should submit their views in writing by August 6, 1984, to the Secretary, Securities and Exchange Commission, Washington, D.C. 20549, and serve a copy on the declarant at the address specified above. Proof of service (by affidavit or, in case of an attorney at law, by certificate) should be filed with the request. Any request for a hearing shall identify specifically the issues of fact or law that are disputed. A person who so requests will be notified of any hearing, if ordered, and will receive a copy of any notice or order issued in this matter. After said date, the declaration, as filed or as it may be amended, may be permitted to become effective.

For the Commission, by the Office of Public Utility Regulation, pursuant to delegated authority.

Shirley E. Hollis,

Assistant Secretary,

[FR Doc. 84-18950 Filed 7-17-84; 8:45 am]

BILLING CODE 8010-01-M

[Release No. 21130; SR-Amex-84-13]

American Stock Exchange, Inc., Order Approving Proposed Rule Change

July 10, 1984.

The American Stock Exchange, Inc. ("Amex"), 86 Trinity Place, New York, NY 10006, submitted on May 14, 1984, copies of a proposed rule change pursuant to Section 19(b)(1) of the Securities Exchange Act of 1934 (the "Act") and Rule 19b-4 thereunder, to adopt an Options Trading Permits Plan (the "Plan"). Under the proposal, each Amex regular member and options principal member ("OPM") will receive a transferable right for 60 days to acquire one-seventh of an Options Trading Permit ("OTP"). During the offering period, those persons who acquire seven "options rights" may exchange them for one Options Trading Permit. The holder of an OTP will be entitled to trade non-equity options for his own account for a two year period, during which time he can elect to expand his trading privileges to include individual options upon payment of a privilege fee. Upon expiration of the two year period, the trader could acquire an options principal membership upon payment of an additional fee. The plan could add a maximum of 108 options traders to the floor.

Notice of the proposed rule change together with the terms of substance of the proposed rule change was given by the issuance of a Commission Release (Securities Exchange Act Release No. 20989, May 24, 1984) and by publication in the Federal Register (49 FR 23134, June 4, 1984). All written statements filed with the Commission and all written communications between the Commission and any person relating to the proposed rule change were considered and (with the exception of those statements or communications which may be withheld from the public in accordance with the provisions of 5 U.S.C. 552) were made available to the public at the Commission's Public Reference Room.

The Commission has received, in response to the proposed rule change, a copy of a complaint filed against Amex in the New York Supreme Court on June 18, by 1984 by Cambridge Options.[1] In general, the complaint alleges that the creation of a new class of membership is in contravention of the Exchange's Certificate of Incorporation and laws of the state of New York.

[1] Petitioner, Cambridge Options, states in its complaint that it is a limited partnership organized under the laws of New York and that it owns an OPM on Amex.

In a separate letter dated June 20, 1984, counsel for Cambridge Options indicated that paragraph ten of the complaint specifies those objections to the Plan which plaintiff wishes the Commission to consider.[2] Paragraph ten of the complaint alleges, in pertinent part, that Amex violated the rights of those persons currently owning OPMs by denying this class of members a right to vote on whether to adopt the Plan. In this regard, the Commission notes that the Constitution of the Exchange provides that any change in the number of OPMs shall be made by an amendment of the Constitution, and that the Constitution may be amended only by the regular members. *See* Constitution of Amex, Article IV, Section 1(b)(1), and Article XIII, Section 1. Additionally, the Exchange's Certificate of Incorporation provides that OPMs shall be entitled to vote only upon proposals which adversely affect their rights upon dissolution of the exchange, and further provides that the addition of members to any existing class shall not be considered to adversely affect the rights of OPMs upon dissolution. *See* Certificate of Incorporation of Amex, Paragraph 9 (Members), 1976.

Under Section 19(b)(2) of the Act, the Commission must approve a proposed rule change if it finds that the proposal is consistent with the requirements of the Act and the rules and regulations thereunder applicable to exchanges. The Commission finds that the proposal to adopt the Options Trading Permit Plan and thereby add as many as 108 options traders to the floor is consistent with the provisions of the Act, and in particular, the requirements of Section 6(b)(5). The proposed plan, by making available a new class of membership, has the potential to increase the depth and liquidity of the Exchange's options market and thereby advance competition and contribute to the perfection of a free and open market. The Plan is also consistent with Section 6(b)(8) of the Act, which requires that the rules of an exchange not impose a burden on competition not necessary or appropriate under the Act.[3]

The Commission therefore finds that the proposed Plan is consistent with the requirements of the Act, and that it does not violate any rights under Amex rules held by current OPMs. As stated previously, the Constitution and the Articles of Incorporation of the Exchange specifically delineate the privileges and rights attendent upon ownership of an OPM; thus, it must be concluded that members of this class purchased their memberships with full knowledge of the voting rights applying to the class.

In view of the foregoing, the Commission hereby approves the proposed amendment to Article IV, Section 1(b)(1) of the Amex Constitution increasing the number of authorized OMPs from 200 to 203, and the amendment to Article IV, Section 1 whereby the terms of substance of the Options Trading Permits Plan are included in new subparagraph (i)(1).

It is therefore ordered, pursuant to Section 19(b)(2) of the Act, that the above-mentioned proposed rule change be, and hereby is, approved.

For the Commission, by the Division of Market Regulation pursuant to delegated authority.

Shirley E. Hollis,

Assistant Secretary.

[FR Doc. 84-18345 Filed 7-17-84; 8:45 am]

BILLING CODE 8010-01-M

[Release No. 34-21121; File No. SR-CBOE-84-16]

Self-Regulatory Organizations; Proposed Rule Change by Chicago Board Options Exchange, Inc.

Pursuant to Section 19(b)(1) of the Securities Exchange Act of 1934, 15 U.S.C. 78s(b)(1), notice is hereby given that on May 3, 1984, the Chicago Board Options Exchange, Incorporated filed with the Securities and Exchange Commission the proposed rule change as described in Items I, II and III below, which Items have been prepared by the self-regulatory organization. The Commission is publishing this notice to solicit comments on the proposed rule change from interested persons.

I. Text of the Proposed Rule Change

Additions are italicized; deletions are bracketed.

Article VI—Board of Directors; Number, Election and Term of Office of Directors

Section 6.1. The Board of Directors shall be composed of *24 Directors* [21 Directors], *18 of whom* [15 of whom] shall be members or executive officers of member organizations of the Exchange and shall be elected by the membership of the Exchange, 4 of whom shall not be members of the Exchange and shall be appointed by the Chairman of the Board and approved by the Board to represent the public (public directors), and the Chairman of the Board and the President, who by virtue of their offices shall be members of the board. At least *9 of the 18* [6 of the 15] elected directors shall be members who individually either own or directly control their memberships on the Exchange and are primarily engaged in business on the Exchange floor (floor directors) and at least *6 of the 18* [6 of the 15] elected directors shall be executive officers of member organizations which primarily conduct a non-member public customer business and shall individually not be primarily engaged in business activities on the Exchange floor (off-floor directors). Of the off-floor directors, at least 3 shall have as their ordinary place of business a location more than 80 miles from the Exchange's trading floor. The remaining *3 of the 18* [3 of the 15] elected directors shall be members who function in any recognized capacity either individually or on behalf of a member organization. At each annual election meeting, *6 directors* [5 directors] shall be elected, at least 2 shall be off-floor directors, of which at least 1 shall be a non-resident; at least *3* [2] shall be floor directors. All of such elected directors shall succeed those elected directors whose terms expire and shall serve for a term of 3 years. *At the next annual election meeting occurring subsequent to the effective date of the Constitutional amendment increasing the number of floor directors from 6 to 9, 5 floor directors shall be elected, 3 for a term of 3 years, 1 for a term of 2 years, and 1 for a term of 1 year.* After the annual election meeting next occurring subsequent to the effective date of the Constitutional amendment increasing the number of public directors, 2 public directors shall be appointed, 1 for a term of 2 years and 1 for a term of 1 year; and after each subsequent annual election meeting, 2 public directors shall be appointed, each to serve for a two year term, succeeding the public directors whose terms then expire. Each director shall hold office for the term to which he is elected or appointed and until his successor is duly elected or appointed and qualified or until his earlier death, resignation or removal.

---

[2] *See* letter of June 20, 1984 from Samuel B. Mayer, counsel for petitioner, to Eneida Rosa, Branch Chief (Options Regulation), Securities and Exchange Commission.

[3] The Commission has previously found that an arbitrary limitation on the number of persons entitled to physical access to the floor of an exchange results in a burden on competition which is inconsistent with the requirements of the Act. *See* Securities Exchange Act Release No. 17038 (August 1, 1980), 45 FR 52528 (August 7, 1980), in which the Commission disapproved a proposed rule change by the New York Stock Exchange which would have permanently limited to two the number of physical access memberships.

II. Self-Regulatory Organization's Statement of the Purpose of, and Statutory Basis for, the Proposed Rule Change

In its filing with the Commission, the self-regulatory organization included statements concerning the purpose of and basis for the proposed rule change and discussed any comments it received on the proposed rule change. The text of these statements may be examined at the places specified in Item IV below and is set forth in sections (A), (B), and (C) below.

(a) *Self-Regulatory Organization's Statement of the Purpose of, and the Statutory Basis for, the Proposed Rule Change*

The purpose of the proposed rule change is to increase the number of floor directors from six to nine and to increase the total number of directors from 21 to 24. The statutory bases for the proposed rule change are sections 6(b)(3) and 6(b)(1) of the Securities Exchange Act of 1934 (the Act).

Section 6(b)(3) requires that the rules of the Exchange " assure a fair representation of its members in the selection of its directors and administration of its affairs. " It is to secure fairer representation that the Exchange proposes to add three floor directors to the board. This addition would provide floor members with more appropriate and more proportional representation (from 6 of 21 to 9 of 24), when one considers the percentage of members who are floor members.

Three more floor directors also would provide the Exchange with much needed floor representation in connection with the extensive member committee structure. More directors could serve on committees and could be available to update members on Exchange activities. This would result in improved communications among the board, its committees and the membership, which ideally would make the Exchange more effective.

Section 6(b)(1) requires that the Exchange be organized and have the capacity to carry out the purposes of the Act. The addition of the three floor directors can only enhance the Exchange's ability to accomplish those ends for the same reasons described above.[1]

(B) *Self-Regulatory Organization's Statement on Burden on Competition*

The Exchange does not believe that the proposed rule change would create any burden on competition.

(C) *Self-Regulatory Organization's Statement on Comments on the Proposed Rule Change Received from Members, Participants or Others*

Formal comments respecting this rule-change filing were neither solicited nor received.

III. Date of Effectiveness of the Proposed Rule Change and Timing for Commission Action

Within 35 days of the date of publication of this notice in the Federal Register or within such longer period (i) as the Commission may designate up to 90 days of such date if it finds such longer period to be appropriate and publishes its reasons for so finding or (ii) as to which the self-regulatory organization consents, the Commission will:

(A) By order approve such proposed rule change, or

(B) Institute proceedings to determine whether the proposed rule change should be disapproved.

IV Solicitation of Comments

Interested persons are invited to submit written date, views and arguments concerning the foregoing. Persons making written submission should file six copies thereof with the Secretary, Securities and Exchange Commission, 450 Fifth Street, Washington, D.C. 20549. Copies of the submission, all subsequent amendments, all written statements with respect to the proposed rule change that are filed with the Commission, and all written communications relating to the proposed rule change between the Commission and any person, other than those that may be withheld from the public in accordance with the provisions of 5 U.S.C. 552, will be available for inspection and copying the Commission's Public Reference Section, 450 Fifth Street, NW., Washington, D.C. Copies of such filing will also be available for inspection and copying at the principal office of the above-mentioned self-regulatory organization. All submissions should refer to the file number in the caption above and should be submitted by August 8, 1984.

For the Commission by the Division of Market Regulation, pursuant to delegated authority.

Dated: July 6, 1984.

Shirley E. Hollis,

Assistant Secretary.

[FR Doc. 84-18947 Filed 7-17-84; 8:45 am]

BILLING CODE 8010-01-M

[1] In its original filing received by the Commission on May 3, 1984, the Exchange noted that final action approving this proposed rule change was taken by means of a membership vote on April 12, 1984. On June 21, 1984, the Exchange submitted Amendment No. 1 to the proposed rule change. This amendment expands upon the statement of purpose initially filed with the Commission. Both the original filing and the amendment include copies of letters distributed to the membership by the Floor Members Association ("FMA") and the public directors. As stated in these letters, the Board of Directors of the FMA supports the proposed rule change, and the public directors oppose it. It should also be noted that the Board of Directors of the Exchange opposes the proposed rule change.

[Release No. 34-21122; File No. SR-CBOE-84-15]

Self-Regulatory Organizations; Proposed Rule Change by Chicago Board Options Exchange, Inc.

Pursuant to Section 19(b)(1) of the Securities Exchange Act of 1934, 15 U.S.C. 78s(b)(1), notice is hereby given that on May 3, 1984 the Chicago Board Options Exchange, Incorporated filed with the Securities and Exchange Commission the proposed rule change as described in Items I, II and III below, which Items have been prepared by the self-regulatory organization. The Commission is publishing this notice to solicit comments on the proposed rule change from interested persons.

I. Text of the Proposed Rule Change

Additions are italicized; deletions are bracketed.

Article VIII—Officers: Designation; Number; Election

Section 8.1. (a) The officers of the Exchange shall be a Chairman of the Board, a Chairman of the Executive Committee, a President, one or more Vice-Presidents (the number thereof to be determined by the Board of Directors), a Secretary, A Treasurer, and such other officers as the Board may determine. The Chairman of the Board shall be elected by the affirmative vote of at least two-thirds of the Directors than in office exclusive of the Chairman and the President, who shall not vote. Such affirmative vote may also prescribe his duties not inconsistent with the Constitution or Rules and may prescribe a tenure of office. The Chairman of the Executive Committee shall be a director who owns or directly controls his own membership and shall be elected by [the affirmative vote of a majority of the Directors than in office, pursuant to procedures prescribed by the Board, at the first regular meeting of the Directors following each election meeting.] *a plurality of members voting at a meeting of the membership held each year on the third business day in January* and shall serve until his successor is duly chosen and qualified or until his earlier death or his resignation or removal. *Candidates for*

the office must notify the Secretary of the Exchange in writing no later than the third Monday of December. In the event there is only one candidate, no election need be held and the Board of Directors shall declare the office filled by the sole announced candidate. The remaining officers of the Exchange shall be appointed by the Chairman of the Board, subject to the approval of the Board, at the first regular meeting of the Directors after each annual election meeting, and shall serve until his successor is duly chosen and qualified or until his earlier death or his resignation or removal.

(b) No change.

II. Self-Regulatory Organization's Statement of the Purpose of, and Statutory Basis for, the Proposed Rule Change

In its filing with the Commission, the self-regulatory organization included statements concerning the purpose of and basis for the proposed rule change and discussed any comments it received on the proposed rule change. The text of these statements may be examined at the places specified in Item IV below and is set forth in sections (A), (B), and (C) below.

(A) *Self-Regulatory Organization's Statement of the Purpose of, and the Statutory Basis for, the Proposed Rule Change*

The purpose of the proposed rule change is to elect the chairman of the Exchange's Executive Committee, who also is the vice chairman of the Exchange's board of directors, by a plurality at a member vote in January after the December annual election meeting. This vote would only be necessary when there is more than one candidate. At present the chairman of the executive committee is elected by the board of directors. The statutory bases for the proposed rule change are sections 6(b)(3) and 6(b)(1) of the Securities Exchange Act of 1934 (the Act).

Section 6(b)(3) requires that the rules of the Exchange " assure a fair representation of its members in the selection of its directors and administration of its affairs. " Presently no officer of the Exchange is selected by the membership. The vice chairmanship is the only member whose specific administrative responsibilities are delineated in the constitution. He is the only member who is a part of the administration. The vice chairman's administrative responsibilities include chairing the executive committee and coordinating the extensive member committee structure of the Exchange. His selection by the full membership, as proposed, would provide a more fair representation of the full membership in the administration of the Exchange and, therefore, would comply with the Act.

Section 6(b)(1) of the Act requires that the Exchange be organized and have the capacity to carry out the purposes of the Act. The manner in which the vice chairman is selected would not change the organizational structure of the Exchange, so that the Exchange would remain in compliance with that section. It should be noted that at the time the Exchange originally was registered with the SEC as a national securities exchange, both the chairman and vice chairman were elected by the full membership. Thus, there can be little doubt that the election by the full membership of the vice chairman, who is neither chief operating officer nor chief executive officer, complies with the Act.[1]

(B) *Self-Regulatory Organization's Statement on Burden on Competition*

The Exchange does not believe that the proposed rule change would create any burden on competition.

(C) *Self-Regulatory Organization's Statement on Comments on the Proposed Rule Change Received from Members, Participants or Others*

Formal comments respecting this rule-change filing were neither solicited nor received.

III. Date of Effectiveness of the Proposed Rule Change and Timing for Commission Action

Within 35 days of the date of publication of this notice in the Federal Register or within such longer period (i) as the Commission may designate up to 90 days of such date if it finds such longer period to be appropriate and publishes its reasons for so finding or (ii) as to which the self-regulatory organization consents, the Commission will:

(A) By order approve such proposed rule change, or

(B) Institute proceedings to determine whether the proposed rule change should be disapproved.

IV. Solicitation of Comments

Interested persons are invited to submit written data, views and arguments concerning the foregoing. Persons making written submission should file six copies thereof with the Secretary, Securities and Exchange Commission, 450 Fifth Street, Washington, D.C. 20549. Copies of the submission, all subsequent amendments, all written statements with respect to the proposed rule change that are filed with the Commission, and all written communications relating to the proposed rule change between the Commission and any person, other than those that may be withheld from the public in accordance with the provisions of 5 U.S.C. 552, will be available for inspection and copying the Commission's Public Reference Section, 450 Fifth Street, NW., Washington, D.C. Copies of such filing will also be available for inspection and copying at the principal office of the above-mentioned self-regulatory organization. All submissions should refer to the file number in the caption above and should be submitted by August 8, 1984.

For the Commission by the Division of Market Regulation, pursuant to delegated authority.

Dated: July 6, 1984.

Shirley E. Hollis,

Assistant Secretary.

[FR Doc. 84-18943 Filed 7-17-84; 8:45 am]

BILLING CODE 8010-01-M

[1] In its original filing received by the Commission on May 3, 1984, the Exchange noted that final action approving this proposed rule change was taken by means of a membership vote on April 12, 1984. On June 21, 1984, the Exchange submitted Amendment No. 1 to the proposed rule change. This amendment expands upon the statement of purpose originally filed with the Commission. Both the original filing and the amendment include copies of letters distributed to the membership by the Floor Members Association ("FMA") and the public directors. As stated in these letters, the Board of Directors of the FMA supports the proposed rule change, and the public directors oppose it. It should also be noted that the Board of Directors of the Exchange opposes the proposed rule change.

[Release No. 21128; SR-NASD-84-5]

National Association of Securities Dealers, Inc.; Order Approving Proposed Rule Change

July 10, 1984.

The National Association of Securities Dealers, Inc. ("NASD"), 1735 K Street, NW., Washington, D.C. 20006, submitted on March 7, 1984, a proposed rule change pursuant to Section 19(b)(1) of the Securities Exchange Act of 1934 ("Act") and Rule 19b-4 thereunder to amend Article III, Section 26(k) of the Rules of Fair Practice. The NASD is amending subsections (k)1, (k)2, (k)3, and (k)6 of Section 26(k) to clarify that those provisions apply to the sale or distribution of shares of an investment company. In addition, the NASD is amending subsection (k)7 of Section 26(k) to clarify that a member must comply with the other provisions of

subsection (k) notwithstanding subsection (k)7

Notice of the proposed rule change together with the terms of substance of the proposed rule change was given by the issuance of a Commission release (Securities Exchange Act Release No. 21003, May 30, 1984) and by publication in the Federal Register (49 FR 23273, June 5, 1984). No comments were received with respect to the proposed rule change.

The Commission finds that the proposed rule change is consistent with the requirements of the Act and the rules and regulations thereunder applicable to the NASD and, in particular, the requirements of Section 15A and the rules and regulations thereunder.

It is therefore ordered, pursuant to Section 19(b)(2) of the Act, that the above-mentioned proposed rule change be, and it hereby is, approved.

For the Commission, by the Division of Market Regulation, pursuant to delegated authority, 17 CFR 200.30-3(a)(12).

Shirley E. Hollis,

Assistant Secretary.

[FR Doc. 84-18944 Filed 7-17-84; 8:45 am]

BILLING CODE 8010-01-M

Cincinnati Stock Exchange; Applications for Unlisted Trading Privileges and of Opportunity for Hearing

July 11, 1984.

The above named national securities exchange has filed applications with the Securities and Exchange Commission pursuant to Section 12(f)(1)(B) of the Securities Exchange Act of 1934 and Rule 12f-1 thereunder, for unlisted trading privileges in the following stocks:

Circuit City Stores, Inc.
Common Stock, $1.00 Par Value (File No. 7-7547)
Iowa-Illinois Gas & Electric Company
Common Stock, $1.00 Par Value (File No. 7-7548)
Montana-Dakota Utilities Co.
Common Stock, $10.00 Par Value (File No. 7-7549)
Lorimar
Common Stock, No Par Value (File No. 7-7550)
Wisconsin Power & Light Company
Common Stock, $5.00 Par Value (File No. 7-7552)

These securities are listed and registered on one or more other national securities exchange and are reported in the consolidated transaction reporting system.

Interested persons are invited to submit on or before August 1, 1984, written data, views and arguments concerning the above-referenced applications. Persons desiring to make written comments should file three copies thereof with the Secretary of the Securities and Exchange Commission, Washington, D.C. 20549. Following this opportunity for hearing, the Commission will approve the applications if it finds, based upon all the information available to it, that the extensions of unlisted trading privileges pursuant to such applications are consistent with the maintenance of fair and orderly markets and the protection of investors.

For the Commission, by the Division of Market Regulation, pursuant to delegated authority.

Shirley E. Hollis,

Assistant Secretary.

[FR Doc. 84-18949 Filed 7-17-84; 8:45 am]

BILLING CODE 8010-01-M

Midwest Stock Exchange, Inc., Applications for Unlisted Trading Privileges and of Opportunity for Hearing

July 11, 1984.

The above named national securities exchange has filed applications with the Securities and Exchange Commission pursuant to Section 12(f)(1)(B) of the Securities Exchange Act of 1934 and Rule 12f-1 thereunder, for unlisted trading privileges in the following stocks:

Rollins Communication, Inc.
Common Stock, $1.00 Par Value (File No. 7-7541)
RPC Energy Services, Inc.
Common Stock, $1.00 Par Value (File No. 7-7542)
Pandick, Inc.
Common Stock, 10¢ Par Value (File No. 7-7544)
Circuit City Stores, Inc.
Common Stock, $1.00 Par Value (File No. 7-7546)
Atlas Van Lines, Inc.
Common Stock, No Par Value (File No. 7-7543)

These securities are listed and registred on one or more other national securities exchange and are reported in the consolidated transaction reporting system.

Interested persons are invited to submit on or before August 1, 1984 written data, views and arguments concerning the above-referenced applications. Persons desiring to make written comments should file three copies thereof with the Secretary of the Securities and Exchange Commission, Washington, D.C. 20549. Following this opportunity for hearing, the Commission will approve the applications if it finds, based upon all the information available to it, that the extensions of unlisted trading privleges pursuant to such applications are consistent with maintenance of fair and orderly markets and the protection of investors.

For the Commission by the Division of Market Regulation, pursuant to delegated authority.

Shirley E. Hollis,

Assistant Secretary.

[FR Doc. 84-18948 Filed 7-17-84; 8:45 am]

BILLING CODE 8010-01-M

Forms Under Review of Office of Management and Budget

Agency Clearance Officer: Kenneth A. Fogash, (202) 272-2142.

Upon Written Request Copy Available from: Securities and Exchange Commission, Office of Consumer Affairs, Washington, D.C. 20549.

Extension of Approval
Rule 15b2-1
No. 270-10

Notice is hereby given that pursuant to the Paperwork Reduction Act of 1980 (44 U.S.C. 3501 et seq.), the Securities and Exchange Commission has submitted for extension of OMB approval Rule 15b2-1 (17 CFR 240.15b2-1) under the Securities Exchange Act of 1934 (15 U.S.C. 78 et seq.) which requires certain reports to be made by exchange members, brokers and dealers. The potential affected persons are approximately 5,000 registered broker-dealers.

Submit comments to OMB Desk Officer: Ms. Katie Lewin, (202) 395-7231, Office of Information and Regulatory Affairs, Room 3235 NEOB, Washington, D.C. 20503.

Dated: July 12, 1984.

Shirley E. Hollis,

Assistant Secretary.

[FR Doc. 84-19033 Filed 7-17-84; 8:45 am]

BILLING CODE 8010-01-M

[Release No. 14035; 812-5781]

American Growth Fund, Inc.; Filing of Application for Exemption To Permit an Offer of Exchange

July 12, 1984.

Notice is hereby given that American Growth Fund, Inc., 650 17th Street, Suite 800, Denver, Colorado 80202, ("Applicant"), an open-end, diversified management investment company registered under the Investment Company Act of 1940 ("Act"), filed an application on February 28, 1984 and an

amendment thereto on May 25, 1984, for an order of the Commission (1) pursuant to section 11(a) of the Act to permit Applicant to offer its shareholders the opportunity to exchange their shares in Applicant for shares of certain money market funds, and (2) pursuant to section 6(c) of the Act to exempt Applicant from the provisions of section 22(d) of the Act to the extent necessary to permit such former shareholders of Applicant to reinvest in Applicant's shares without the imposition of the customary sales load and to the extent necessary to permit the sale of Applicant's shares without a sales load to members of its board of advisers. All interested persons are referred to the application on file with the Commission for a statement of the representations contained therein, which are summarized below, and to the Act for the text of the provisions pertinent to the application.

According to the application, Applicant's principal underwriter is American Growth Fund Sponsors, Inc., and Investment Research Corporation, its investment adviser. Applicant states that its shares are offered subject to a sales charge which ranges from 8.5% of the offering price down to 3.25%, depending on the amount invested or committed to be invested pursuant to a letter of intent.

Applicant proposes to permit its shareholders to exchange their shares for shares of unaffiliated money market funds with which Applicant establishes an agreement enabling such exchange. Applicant states that such an agreement would permit its shareholders to (1) redeem their shares and use the proceeds of such redemption to purchase shares of the money market fund, and (2) redeem the money market shares purchased with Applicant's shares and use the proceeds (including proceeds from the sale of shares acquired as a result of reinvestment of dividends and distributions) to repurchase Applicant's shares without the imposition of the customary sales charge (hereinafter referred to as the "Exchange Privilege"). Money market fund shares acquired in any other manner than described above would not qualify for the Exchange Privilege and the Exchange Privilege will only be available to shareholders who repurchase Applicant's shares with proceeds from the redemption of such money market shares within forty-five days after redemption. Applicant states that it will charge its shareholders a service fee, the maximum amount of which will be $10.00, for each exchange of its shares for money market shares and each exchange of money market shares for Applicant's shares.

Applicant represents that it will offer the Exchange Privilege only with money market funds with which it has reached an agreement providing for a no load investment through exercise of the Exchange Privilege and without the imposition of any other fee by the money market fund in connection with the Exchange Privilege.

Applicant states that it will reserve the right to establish limits upon the minimum dollar amount and number of exchanges which any shareholder may be permitted to make within a specified time pursuant to the Exchange Privilege. Such limits will be imposed if Applicant's board of directors determines that the exchange activity is detrimental to the management of Applicant's portfolio. Any limitation of the Exchange Privilege would be disclosed in Applicant's prospectus and all of Applicant's existing shareholders will be notified of any change in such limitation. Such notice will be given not less than sixty days prior to adoption or change of such limitation or discontinuance of the Exchange Privilege.

Applicant undertakes that where any of its shareholders exchanges all of his shares in Applicant pursuant to the Exchange Privilege, it will furnish such shareholder with a currently effective prospectus prior to such shareholder's reinvestment in Applicant's shares. Applicant contends that since no additional sales effort will be required in connection with the reacquisition of its shares by these former shareholders, no additional sales charge should be imposed at that time.

In addition, Applicant proposes to adopt a plan pursuant to Rule 22d-1(i) under the Act whereby it will offer its officers, directors, full time employees and sales representatives, its investment adviser and its principal underwriter, the opportunity to purchase Applicant's shares without the imposition of a sales load. Applicant seeks to extend that offer to the members of its board of advisers. However, since members of a board of advisers are not specifically included in Rule 22d-1(i), Applicant has requested an order pursuant to section 6(c) of the Act to enable such persons to purchase its shares without the imposition of a sales load, subject to all the terms and conditions specified in Rule 22d-1(i). In support of its request for an exemption, Applicant represents that it is not expected that members of its board of advisers will be actively solicited to invest in its shares. Furthermore, due to the familiarity of such persons with Applicant, Applicant does not believe that sales efforts by its principal underwriter will be necessary or desirable in connection with these sales. Accordingly, Applicant submits no sales load should be imposed where members of its board of advisers purchase its shares.

Notice is further given that any interested person wishing to request a hearing on the application may, not later than August 6, 1984, at 5:30 p.m., do so by submitting a written request setting forth the nature of his interest, the reasons for his request, and the specific issues, if any, of fact or law that are disputed, to the Secretary, Securities and Exchange Commission, Washington, DC 20549. A copy of the request should be served personally or by mail upon Applicant at the address stated above. Proof of service (by affidavit or, in the case of an attorney-at-law, by certificate) shall be filed with the request. After said date an order disposing of the application will be issued unless the Commission orders a hearing upon request or upon its own motion.

For the Commission, by the Divison of Investment Management, pursuant to delegated authority.

Shirley E. Hollis,

Assistant Secretary.

[FR Doc. 84-19024 Filed 7-17-84; 8:45 am]
BILLING CODE 8010-01-M

[Release No. 14034; 812-5828]

American Southwest Financial Corp., et al., Filing of Application

Notice is hereby given that American Southwest Financial Corporation and American Southwest Finance Co., Inc., Suite 2030, 201 N. Central Avenue, Phoenix, Arizona 85073, ("Applicants"), filed an application on April 19, 1984, for an order, pursuant to Section 6(c) of the Investment Company Act of 1940 ("Act"), amending a previous order dated November 23, 1982 (Investment Company Act Release No. 12844) (the "previous order"). The previous order, pursuant to section 6(c) of the Act, exempted Applicants from all of the provisions of the Act. All interested persons are referred to the application on file with the Commission for a statement of the representations contained therein, which are summarized below, and to the Act and the Rules thereunder for the text of the provisions referred to herein.

According to the application, each Applicant is a limited purpose financing corporation which is wholly-owned by

limited purpose financing companies (the "Finance Companies"), each of which is principally owned by or otherwise affiliated with one or more concerns engaged in the homebuilding business (the "Builders"), or is a mortgage banking or other financial institution providing financing or other services to Builders. Each Applicant was incorporated for the limited purpose of facilitating the financing of long-term residential mortgages on single family residences and will not engage in any other unrelated business or investment activities. Applicants issue securities ("the Bonds") and enter into Funding Agreements with the Finance Companies with respect to such securities.

Applicants propose to conduct their business as described in the previous application, except that they would utilize as collateral for their Bonds the Mortgage Collateral described below. Applicants state that at the time of the previous application, it was contemplated that one Applicant would issue Bonds secured primarily by GNMA Certificates and the other Applicant would issue Bonds secured primarily by Pledged Loans. According to the Applicants, further developments in the mortgage finance and investment banking industries have indicated that such differences are no longer necessary and that economies of scale would dictate that each Applicant in certain cases issue Bonds secured by either or both types of collateral. In addition, Applicants state that other types of mortgage collateral have become accepted collateral for Bonds of the type issued by the Applicants. Accordingly, each Applicant proposes to issue Bonds secured primarily by Mortgage Collateral which may include conventional mortgage loans, mortgage loans insured by the Federal Housing Administration, mortgage loans guaranteed by the Veterans' Administration, and Mortgage Participation Certificates issued by the Federal Home Loan Mortgage Corporation, Guaranteed Mortgage Pass-Through Certificates issued by the Federal National Mortgage Association, GNMA Certificates and mortgage pass-through certificates or mortgage collateralized obligations issued by any person or entity or other interests in mortgages.

Applicants do not believe the proposed changes concerning the eligible Mortgage Collateral in any fashion alter the soundness of the analysis contained in the original application, and should not affect the availability of exemptive relief. Applicants submit that the basic purpose of their business continues to be facilitating the financing efforts of a number of small builders to achieve economies of size the same as larger builders of builder-owned entities achieve and the proposed modifications to the previous order do not constitute a reason to require them to register as investment companies. Additionally, Applicants submit that they were formed for the primary purpose of facilitating the financing of mortgages to expand the availability of residential mortgages, a significant national need; their activities have contributed to the resolution of the continuing need for mortgage funds in the economy; and the proposed changes further contribute to the national interest in this respect.

Notice is further given that any interested person wishing to request a hearing on the application may, not later than August 6, 1984, at 5:30 p.m., do so by submitting a written request setting forth the nature of his interest, the reasons for his request, and the specific issues, if any, of fact or law that are disputed, to the Secretary, Securities and Exchange Commission, Washington, D.C. 20549. A copy of the request should be served personally or by mail upon Applicants at the address stated above. Proof of service (by affidavit or, in the case of an attorney-at-law, by certificate) shall be filed with the request. After said date an order disposing of the application will be issued unless the Commission orders a hearing upon request or upon its own motion.

For the Commission, by the Division of Investment Management, pursuant to delegated authority.

Shirley E. Hollis,

Assistant Secretary.

[FR Doc. 84-19025 Filed 7-17-84; 8:45 am]

BILLING CODE 8010-01-M

[Release No. 14031; 812-583]

Capital Southwest Corp., Application Permitting Certain Joint Transactions

July 12, 1984.

Notice is hereby given that Capital Southwest Corporation, 12900 Preston Road, Dallas, Texas 75230, ("Applicant" or "CSC"), registered under the Investment Company Act of 1940 ("Act") as a closed-end, non-diversified management investment company, filed an application on April 20, 1984, with amendments thereto on June 4 and June 27, 1984, requesting an order pursuant to section 6(c) of the Act granting exemptions from the provisions of sections 18(d) and 23 (a) and (b) of the Act, and pursuant to section 17(d) of the Act, and Rule 17d-1 thereunder, permitting transactions among Applicant and certain of its directors and officers in connection with the proposed adoption and implementation of a stock option plan (the "Plan"). All interested persons are referred to the application on file with the Commission for a statement of the representations contained therein, which are summarized below, and to the Act for the text of pertinent provisions.

Applicant states that it is a publicly-held company whose common stock is traded in the over-the-counter market. Applicant further states that as of March 31, 1984, it had outstanding 2,000,208 shares held by approximately 1,100 shareholders of record.

According to the application, Applicant has a wholly-owned subsidiary, Capital Southwest Venture Corporation ("CSVC"), which is registered under the Act as a closed-end, non-diversified management investment company, and licensed as a small business investment company by the Small Business Administration ("SBA") pursuant to the Small Business Investment Act of 1958 (the "SBA Act"). Applicant states that CSC and CSVC each have qualified and elected to be taxed as a regulated investment company (a "RICO") under section 851 of the Internal Revenue Code ("Code") during the two fiscal years ended March 31, 1984, and may elect to so qualify in future years when, in the opinion of the board of directors of CSC, such elections are in the best interests of CSC and its shareholders.

Applicant represents that it intends to elect to become a business development company ("BDC"), as defined in the Act, and to cause CSVC to so elect, as soon as practicable after the Code has been amended to permit such election to be made without the loss of status as a RICO. Applicant represents that CSC and CSVC each qualifies otherwise now as a BDC, and that each will conduct its respective investment operations and maintain its respective investment portfolios as if each were a BDC until the elections as BDCs are actually made.

Applicant requests its order in connection with the adoption by CSC of the Plan, the granting of options thereunder and the issuance of its common stock for cash upon exercise of such options. Applicant represents that approval and adoption by the shareholders of CSC of the Plan will be sought at the annual meeting to be held on July 16, 1984. Applicant states that the Plan was approved and adopted by a "required majority" of the board of

directors of CSC, as defined in the Act (the "required majority").

According to the application, eligible recipients of stock options under the Plan are officers of CSC who are either employees of CSC or who are employees of a subsidiary of CSC, but who are key members of CSC's management. Under the Plan, "subsidiary" is defined as any corporation, 50 percent or more of whose stock is directly or indirectly owned by CSC. Applicant states that in addition to CSVC, it has four direct or indirect susidiaries, each of which is an operating company and is an eligible portfolio company, as defined in section 2(a)(46 of the Act.

Applicant states that the Plan is intended to increase the ability of CSC and its subsidiaries to retain talented and experienced key executives familiar with the venture capital business and to attract other talented executives by enabling such executives to obtain an equity interest in CSC. Applicant submits that the Plan will provide an incentive to executives to obtain appreciation in the common stock of CSC.

Applicant states that the Plan, which will be administered by the board of directors of CSC, has been drafted to bring the options within the definition of "incentive stock options", as defined in section 422A of the Code, and to comply with the provisions of section 61(a) of the Act. Applicant states that to comply with these requirements, (1) the Plan specifies that it is limited to 200,000 shares of common stock of CSC, the aggregate number of shares as to which options may be granted to any one employee cannot exceed 50,000 shares, and the aggregate fair market value of the shares with respect to which any one employee may be granted options in any calendar year shall not exceed $100,000, subject to certain unused limit carryovers, (2) Applicant will not permit the number of voting securities that would result from the exercise of all outstanding warrants, options and rights at the time of issuance to exceed 25 percent of its then outstanding voting securities, and if the number of such securities that would result from the exercise of all outstanding warrants, options and rights issued to its directors, officers and employees pursuant to the Plan would exceed 15 percent of the then outstanding voting securities, Applicant will not permit the number of such securities that would result from the exercise of all outstanding warrants, options and rights at the time of issuance to exceed 20 percent of the then outstanding voting securities, (3) the purchase price of shares under each option shall be the fair market value of the common stock of CSC at the time the option is granted (110 percent of such value in the case of an option holder who owns more than 10 percent of the outstanding shares of CSC voting stock), and the option period cannot exceed 10 years (five years in the case of such a 10 percent holder), and (4) the options will be nontransferable, other than at death. The purchase price to be paid upon the exercise of an option must be paid in cash, except that upon receipt of an appropriate order of the Commission under the Act, the board of directors may permit payment of the purchase price by shares of CSC common stock (such order is not being requested by the application).

Applicant represents that, as a condition to the granting of the order requested, it will comply with the following:

(1) CSC will elect to be a BDC and will cause CSVC to so elect as soon as reasonably practicable after the Code is amended to permit CSC and CSVC to retain their status as a RICO followings such election, and, until such elections are effective, will conduct their investment operations and maintain their investment portfolios as if they were a BDC;

(2) The granting of options under the Plan and compensation payable by CSC (and CSVC) to any person who is a participant under the Plan will be fixed by a required majority of the board of directors of CSC, who will take into consideration the present and anticipated benefits under the Plan and the extent of potential dilution caused by the granting of options under the Plan;

(3) Neither CSC nor CSVC will have a profit-sharing plan as described in section 57(n) of the Act while the Plan is in effect, and neither CSC nor CSVC will pay an investment advisor, while the Plan is in effect, any compensation referred to in section 61(a)(3(B)(iii) of the Act, except to the extent permitted as referred to therein; and

(4) No options will be granted under the Plan to any person who is not a regular salaried employee of CSC unless (i) such person is a regular salaried employee of a subsidiary which is an eligible portfolio company (as defined in section 2(a)(46) of the Act) of CSC, and (ii) such person is a duly elected corporate officer of CSC and serves as a key member of the management of CSC with respect to making investments in or providing significant guidance and counsel concerning the management, operations, or business objectives and policies of one or more eligible portfolio companies of CSC or CSVC.

In support of its application, Applicant submits that the exemptions sought pursuant to section 6(c) are necessary or appropriate in the public interest and are consistent with the protection of investors and the purposes fairly intended by the policy and provisions of the Act in that the Plan will benefit CSC, its subsidiaries and its shareholders by increasing the ability of CSC and its subsidiaries to retain a talented, experienced and successful core of key executives familiar with the business of CSC and its subsidiaries, and to attract other talented executives. Applicant states that the board of directors of CSC has decided upon the Plan as the best way to provide an incentive for the key executives to benefit CSC's shareholders, since all will have an interest in seeing the market value of CSC common stock appreciate.

Applicant submits, among other things, that since CSC and CSVC each now qualifies as a BDC, will continue to so qualify (including, as confirmed by letter, compliance with the Act's board composition requirement for BDCs) and will elect to be a BDC as soon as it can do so without loss of status as a RICO, CSC should be permitted to establish a stock option plan which would be permitted for a BDC. Applicant also submits that the adoption of the Plan, the granting of options thereunder and the issuance of common stock upon exercise of such options for cash are consistent with the provisions, policies and purposes of the Act for the reasons set forth above, and any participation of officers of CSC under the Plan will not be on a basis unduly different from or less advantageous than that of the other participants. Applicant notes, however, that all options must of necessity not be identical if they are to reflect the responsibilities of a particular employee for the profitable operations of CSC and to provide an appropriate incentive in the light of other compensation of the particular employee. Applicant represents that the terms of each option and the selection of the employees to be covered is determined by a required majority of the board of directors. Applicant further represents that the required majority will apply the same criteria with respect to all employees in determining other compensation, as well as possible participation under the Plan, and will take into consideration the present and future value of any options granted in determining the amount of other compensation to be paid to such employees, also taking into consideration the effect of potential

dilution. Applicant states that if an option-holder wishes to pay the purchase price upon exercise of an option by the delivery of shares of CSC common stock, as is permitted by the Plan, such action would be subject to the receipt of any appropriate order of the Commission which may be required by the Act, and subject to approval by a required majority.

Notice is further given that any interested person wishing to request a hearing on the application may, not later than August 6, 1984, at 5:30 p.m., do so by submitting a written request setting forth the nature of his/her interest, the reasons for the request, and the specific issues of fact or law that are disputed, to the Secretary, Securities and Exchange Commission, Washington, D.C. 20549. A copy of the request should be served personally or by mail upon Applicant at the address stated above. Proof of service (by affidavit or, in the case of an attorney-at-law, by certificate) shall be filed with the request. After said date, an order disposing of the application will be issued unless the Commission orders a hearing upon request or upon its own motion.

For the Commission, by the Division of Investment Management, pursuant to delegated authority.

Shirley E. Hollis,

Assistant Secretary.

[FR Doc. 84-19028 Filed 7-17-84; 8:45 am]

BILLING CODE 8010-01-M

[Release No. 14032; 812-5820]

Homewood Finance Corp.; Filing of Application

July 12, 1984.

Notice is hereby given that Homewood Finance Corporation, 6079 Northgate Road, Columbus, Ohio 43229, ("Applicant"), a limited purpose financing corporation organized to facilitate the financing of long-term residential mortgage loans, filed an application on April 10, 1984, for an order of the Commission pursuant to section 6(c) of the Investment Company Act of 1940 ("Act") exempting Applicant from all provisions of the Act. All interested persons are referred to the application on file with the Commission for a statement of the representations contained therein which are summarized below, and to the Act for the text of all applicable provisions thereof.

According to the application, Applicant is a wholly-owned subsidiary of Developer's Mortgage Co., an Ohio corporation ("Developer's") which in turn is a wholly-owned subsidiary of Homewood Corporation, an Ohio corporation primarily involved in the homebuilding business ("Homewood"). Applicant states that its Articles of Incorporation restrict it from engaging in any investment activities or business unrelated to the financing of long-term residential mortgage loans.

Applicant contemplates that it will issue, in series ("Series"), up to $100,000,000 aggregate principal amount of GNMA Collateralized Bonds ("Bonds"). Applicant states that each Series of Bonds will be separately secured by collateral consisting primarily of "fully-modified pass-through" mortgage-backed certificates ("GNMA Certificates") and the payments thereon, fully guaranteed as to principal and interest by the Government National Mortgage Association ("GNMA").

Applicant states that each GNMA Certificate will evidence an undivided interest in a pool of mortgage loans either, (i) originated by Developer's as agent for a limited purpose financing subsidiary ("Finance Company"), wholly owned by an entity engaged in the homebuilding industry ("Builder"), on single-family residences constructed by such Builder, (ii) owned by a Finance Company on single-family residences constructed by a related Builder, or (iii) owned by Developer's on single-family residences constructed by Homewood.

Applicant states that each Series of Bonds will be issued pursuant to an indenture ("Indenture") between applicant and Bank One, Columbus, N.A., as an independent trustee ("Trustee"), as supplemented by an indenture supplement for each series ("Indenture Supplement"). Applicant further states that each Series of Bonds will be sold to investors through one or more registered securities dealers and will be offered pursuant to a shelf registration statement on Form S-11 which was declared effective by the Commisson March 1, 1984. The Indenture and related Indenture Supplements for each Series will be subject to the provisions of the Trust Indenture Act of 1939.

Applicant states that the initial Series of Bonds has been issued and is secured by GNMA Certificates owned by Applicant on its on behalf. Applicant anticipates that future Series of Bonds will be secured, in addition to GNMA Certificates owned by Applicant, by GNMA Certificates to which either, (i) legal title will be owned by Applicant for the benefit of unrelated Finance Companies, or (ii) will be owned by unrelated finance Companies, in either case in accordance with the terms of separate funding agreements with the Finance Companies ("Funding Agreements"). Applicant will lend the proceeds from the sale of the Bonds to the Finance Companies pursuant to the Funding Agreements. Applicant states that each Finance Company will distribute its proceeds to its Builder parent. Each Finance Company will repay the loan made to it by Applicant by causing payments on the GNMA Certificates to be made directly to the Trustee in amounts which are necessary to pay a proportionate share of the principal of and interest on the Series of Bonds as the same become due.

Applicant states that it will assign to the Trustee its entire right, title and interest in the Funding Agreements, the collateral pledged thereunder and the GNMA Certificates as security for the Bonds. Applicant further states that all payments of principal of, and interest on, the GNMA Certificates securing a Series of Bonds will be paid to the Trustee and, upon receipt, applied first to payment of interest then due on the Bonds of that Series, then to restoration of certain funds as provided in the Indenture and then deposited, in an amount representing principal payments on the GNMA Certificates, in a redemption fund. Funds deposited in the redemption fund will be available for redemption under the circumstances described more fully in the application.

Applicant states that it believes that it does not fall within the definition of an investment company as set forth in the Act, since the principal assets of the Applicant will consist of GNMA Certificates and the Funding Agreements with the respective Finance Companies. Applicant further submits that the Funding Agreements, while technically evidences of indebtedness of the Finance Companies, are not securities within the purview of section 3 of the Act. Applicant further believes that it should be exempt from the requirements of the Act by virtue of section 3(c)(5)(C) of the Act. Applicant states, however, that although it believes that it is not within the purview of the Act, the application has been filed to eliminate any possible ambiguity concerning the applicability of the Act to Applicant. In support of its position, Applicant represents that its primary activity will be the facilitating of the sale of single-family residential property through the financing of residential mortgages rather than investing, reinvesting, owning, holding or trading securities.

Notice is further given that any interested person wishing to request a hearing on the application may, not later than August 6, 1984, at 5:30 p.m., do so by submitting a written request setting

forth the nature of his interest, the reasons for his request, and the specific issues, if any, of fact or law that are disputed, to the Secretary, Securities and Exchange Commission, Washington, D.C. 20549. A copy of the request should be served personally or by mail upon Applicant at the address stated above. Proof of service (by affidavit or, in the case of an attorney-at-law, by certificate) shall be filed with the request. After said date an order disposing of the application will be issued unless the Commission orders a hearing upon request or upon its own motion.

For the Commission, by the Division of Investment Management, pursuant to delegated authority.

Shirley E. Hollis,

Assistant Secretary.

[FR Doc. 84-19029 Filed 7-17-84; 8:45 am]

BILLING CODE 8010-01-M

[Release No. 14033; 812-5791]

Investment Trust of Boston, et al., Filing of Application

July 12, 1984.

Notice is hereby given that Investment Trust of Boston, Investment Trust of Boston High Income Plus Fund, Inc., Investment Trust of Boston-Massachusetts Tax Free Income Fund, and The Empire Builder Tax Free Bond Fund (herein collectively referred to as the "Funds"), and ITB Distributors, Inc. ("ITB"), principal underwriter or distributor of each Fund (ITB and the Funds herein collectively referred to as "Applicants"), 60 State Street, Boston, Massachusetts 02109, filed an application on March 5, 1984, and an amendment thereto on July 3, 1984, for an order pursuant to section 6(c) of the Investment Company Act of 1940 ("Act"), granting an exemption from the provisions of section 22(d) of the Act to the extent necessary to permit sales of shares of the Funds at prices other than the public offering price described in the prospectus of each Fund. All interested persons are referred to the application on file with the Commission for a statement of the representations contained therein, which are summarized below, and to the Act for the text of the provisions relevant to any consideration of the application.

Applicants state that each Fund is registered under the Act as an open-end management investment company. Their shares are registered under the Securities Act of 1933 and currently are or will be offered for sale to the public in continuous offerings. Applicants further state that ITB is a wholly owned subsidiary of Moseley Capital Management Inc. ("Moseley"), which serves as investment adviser to each of the Funds. Moseley, in turn, is a wholly owned subsidiary of Moseley, Hallgarten, Estabrook & Weeden Holding Corporation, whose principal operating subsidiary is Moseley Hallgarten, Estabrook & Weeden, Inc., a broker-dealer registered under the Securities Exchange Act of 1934 and a member of the New York Stock Exchange. Pursuant to subadvisory agreements with Moseley, Warlick & Baker, Inc. ("W&B"), an investment management firm 50 percent owned by Moseley, provides day-to-day management services to all of the Funds except for Investment Trust of Boston and The Empire Builder Tax Free Bond Fund in return for a fee paid by Moseley to W&B.

According to the application, ITB maintains a continuous offering of shares of Investment Trust of Boston and High Income Plus Fund at their respective net asset values plus a maximum sales charge of 7.25 percent of the offering price (7.82 percent of the net amount invested), with reductions reflecting the amount being invested and certain other factors described in the prospectuses. Applicants state ITB maintains a continuous offering of shares of Massachusetts Tax Free Income Fund and The Empire Builder Tax Free Bond Fund at their respective net asset values plus a maximum sales charge of 4.75 percent of the offering price (4.99 percent of the net amount invested), also with reductions reflecting the amount being invested and other factors.

Applicants propose to permit (i) the sale of Fund shares to all advisory accounts managed by Moseley, and (ii) the sale of Fund shares to all advisory accounts managed by W&B, in all such cases at the net asset value next determined after receipt of a purchase order without the imposition of any sales load or sales charge that would otherwise be applicable to purchases of such shares.

Applicants state that investment companies such as the Fund provide excellent investment opportunities for many of the accounts managed by Moseley and W&B. Applicants assert that these advisers, by virtue of their relationship with the Funds, are totally familiar with them, and that sales of Fund shares to their advisory clients would involve no sales effort or expense. Applicants further represent that neither Moseley nor W&B will promote their advisory services by featuring the availability of Fund shares at net asset value for such prospective clients' accounts. Rather, they will disclose to prospective clients the possibility that their assets may be invested in one or another of the Funds if such clients give the respective adviser advance or specific transactional authority to so invest their asssets. Further, Applicants represent that they will disclose these arrangements, if and when put into place, in the Prospectus or Statement of Additional Information of the affected Funds in the manner prescribed in Commission Forms N-1 and N-1A, which ever is applicable. It is also represented that no "double fee" will be assessed against any advisory clients of Moseley or W&B.

Applicants assert that the proposed sales of Fund shares to advisory accounts under the management of Moseley and W&B could be deemed to violate section 22(d) of the Act, insofar as they would constitute sales at other than the current public offering price described in the prospectuses. Nevertheless, Applicants assert that the exemption sought on their behalf is not contrary to the purposes of section 22(d) and that granting of the requested order is appropriate. It is asserted that the relief requested would be available under proposed Rule 22d-6, if that Rule is adopted as proposed. It is further contended that granting of the requested relief would not undermine the basic goals which led to the adoption of section 22(d)—the prevention of sales practices, such as the creation of secondary markets, which disrupt basic mutual fund distribution patterns and practices, or the dilution of Fund assets through riskless insider trading. Furthermore, Applicants argue that the requested relief would not create price discrimination among shareholders based upon any unjustified distinctions. Substantial equities are said to exist when, as here, neither the Funds nor principal underwriters incur any of the customary selling expenses, the majority of investors receiving the exemptive benefits have no personal control over their investments, and such sales could benefit all shareholders by decreasing the per-share expenses incurred in managing the Funds.

Notice is further given that any interested person wishing to request a hearing on the application may, not later than August 6, 1984, at 5:30 p.m., do so by submitting a written request setting forth the nature of his interest, the reasons for his request, and the specific issues, if any, of fact or law that are disputed, to the Secretary, Securities and Exchange Commission, Washington, DC 20549. A copy of the request should

be served personally or by mail upon Applicants at the address stated above. Proof of service (by affidavit or, in the case of an attorney-at-law, by certificate) shall be filed with the request. After said date an order disposing of the application will be issued unless the Commission orders a hearing upon request or upon its own motion.

For the Commission, by the Division of Investment Management, pursuant to delegated authority.

Shirley E. Hollis.

Assistant Secretary.

1[FR Doc. 84-19030 Filed 7-17-84; 8:45 am]

BILLING CODE 8010-01-M

[Release No. 21141; SR-Amex-84-18]

Self-Regulatory Organizations; American Stock Exchange, Inc., Filing and Order Granting Accelerated Approval of Proposed Rule Change

July 12, 1984.

Pursuant to section 19(b)(1) of the Securities Exchange Act of 1934 (the "Act"), 15 U.S.C. 78s(b)(1), notice is hereby given that on June 7, 1984, the American Stock Exchange, Inc., 86 Trinity Place, New York, NY 10006, filed with the Securities and Exchange Commission the proposed rule change as described herein. The Commission is publishing this notice to solicit comments on the proposed rule change from interested persons.[1]

The Amex proposes to double the value of the Major Market Index ("XMI") and amend Rule 904 concerning position and exercise limits applicable to the new XMI index options contracts.

The value of the XMI will be doubled by halving the divisor used in calculating the index.[2] Accordingly, if the existing index is valued at 110, under this proposed rule change the index value would become 220.[3]

In order to most efficiently effect such a change, the Exchange plans to introduce the new XMI (with August, September and October expirations) on or about July 23, 1984, to correspond with the expiration and rollover of July XMI contracts. Contemporaneous with the introduction of the new index following the July expiration, the Exchange will begin to unwind the then outstanding (August and September) XMI series ("XMZ" is the proposed symbol for the "old" XMI series) by not adding any additional expiration months to the old contract at the rollover. Thus, for a period of two months—August and September—both the new XMI contracts—representing the doubled value—and the old XMI contracts will be trading.[4]

The start-up of the new XMI index will not only provide for an orderly introduction of the new index but also is intended to coordinate with the planned start-up of trading of futures contracts based on the XMI by the Chicago Board of Trade ("CBT"). Consequently, if the CBT start-up is delayed, the Exchange intends to delay its start-up of the new XMI to a date which closely corresponds to the CBT's commencement of trading.

Amex also proposes to change the position and exercise limits for broad-based index options to 10,000 contracts.[5] These limits would be applicable to both the new XMI index options and the Amex Market Value Index Options ("XAM"), the only two broad-based index options currently traded on Amex. The proposed rule would also change the basis for setting the limits from a dollar value to a fixed number of contracts. Under existing rules, position and exercise limits are $200 million with respect to the XMI and are $300 million with respect to the XAM.[6]

Although these limits are expressed in terms of the dollar value of positions held or exercised, Amex enforces these dollar value limits by establishing cut-offs set below these dollar amounts which are expressed in terms of a fixed number of contracts.[7] Currently, the Amex guidelines set position and exercise limits of 10,000 contracts for the XAM index options and 15,000 contracts for the XMI index options.[8]

Based on these guidelines, the proposed position and exercise limits of 10,000 contracts would not result in a limit increase for the XAM index options and thus does not raise any substantive issues.[9] The proposed changes in limits will, however, result in a modest effective increase of limits for the XMI index options.

The Commission, however, has reviewed the proposed limits and believes that the small resulting increase in limits for the XMI will not significantly increase concerns regarding disruption or manipulation of the securities markets. Accordingly, the Commission finds that the proposed 10,000 contract limits will be appropriate for the new XMI index options.[10]

---

[1] Amex submitted Amendment No. 1 to the rule proposal on June 14, 1984 noting the Board of Governors approval of the proposed rule changes.

[2] The index is currently calculated by totalling the prices of the stocks comprising the index and dividing by a constant, initially set at 10. The value of the index will be doubled by halving this dividing constant.

[3] A doubling of the value of the XMI is analogous to a reverse stock split. The value of two old XMI contracts will be equal to the value of one new XMI contract.

[4] Although Amex currently plans to introduce the new XMI contracts on July 23, 1984, it may postpone effectiveness of the change in the index value until a future date. If the change is postponed until a later date the old and new XMI contracts may be trading together during months other than August and September. In addition, Amex may decide to proceed with the change at a time when the introduction of new XMI will not necessarily correspond with the expiration of the old XMI contracts. In any event, the Exchange has represented that the specific approach it adopts will minimize the overlap between the trading of old and new XMI contracts by providing that no additional old XMI series will be added once new XMI options are introduced.

[5] It is the Commission's understanding with Amex that old and new XMI contracts will be aggregated for position and exercise limit purposes under the proposal. Aggregated positions of old and new XMI contracts will not be permitted to exceed the limits that are proposed to apply to the new XMI index options of 10,000 contracts. For purposes of calculating a holder's position, two old XMI contracts will be equal to one new XMI contract. Thus, a person holding solely old XMI contracts could not exceed a 20,000 contract limit since 20,000 old XMI contracts, under the proposed rule change, would be equal to 10,000 new XMI contracts.

[6] The Chicago Board Options Exchange, Incorporated ("CBOE") and New York Stock Exchange, Inc. ("NYSE") also have rule imposing $300 million position and exercise limits on their broad-based index options. *See* CBOE Rule 24.4(a) and NYSE Rule 704(c). However, recently the Commission approved a PSE proposal that establishes position and exercise limits for broad-based index options that are expressed in terms of the number of contracts (15,000) rather than a dollar value. *See* Securities Exchange Act Release No. 21032, June 8, 1984, 49 FR 24964, June 18, 1984. In the order approving these limits, the Commission found that limits expressed in number of contracts may be appropriate for broad-based index options if they are set at levels that adequately protect against disruption or manipulation of the underlying securities. We also note that recent proposals by the Amex, CBOE, and NYSE to increase position and exercise limits for broad-based index options would also change the basis for setting the limits from a dollar value to a fixed number of contracts. *See* Securities Exchange Act Release No. 20946, May 9, 1984, 49 FR 20965, May 17, 1984 (Amex); Securities Exchange Act Release No. 20694, February 23, 1984, 49 FR 7682, March 1, 1984 (CBOE); and Securities Exchange Act Release No. 20925, May 3, 1984, 49 FR 20393, May 14, 1984 (NYSE).

[7] The CBOE and NYSE also provide contract equivalents of the dollar values to their members. The contract equivalents for the broad-based index options traded on these exchanges are currently 15,000 contracts. These contract equivalents act as a safe harbor under the position and exercise limit rules and make it easier for members to monitor compliance with the limits.

[8] *See* Amex Options Information Circular #84-7 dated January 18, 1984.

[9] We note that, at current index values, a 10,000 contract position would be approximately equivalent to $198 million worth of index options, which is below the existing dollar value limits of $300 million. Should the value of the index rise substantially, thus allowing options buyers and sellers to hold or exercise positions worth (in dollars) more than currently allowed, Amex should review its 10,000 contract limit as it applies to the XAM.

[10] At the current XMI index value of approximately 110 and the current dollar value

Continued

Interested persons are invited to submit written data, views and arguments concerning the proposed rule change within 21 days after the date of publication in the Federal Register. Persons desiring to make written comments should file six copies thereof with the Secretary of the Commission, Securities and Exchange Commission, 450 5th Street, NW., Washington, D.C. 20549. Reference should be made to File No. SR-Amex-84-18.

Copies of the submission, all subsequent amendments, all written statements with respect to the proposed rule change which are filed with the Commission and all written communications relating to the proposed rule change between the Commission and any person. Other than those which may be withheld from the public in accordance with the provisions of 5 U.S.C. 552, will be available for inspection and copying at the Commission's Public Rederence Room, 450 5th Street, NW., Washington, D.C. Copies of the filing and of any subsequent amendments also will be available for inspection and copying at the principal office of the above-mentioned self-regulatory organization.

For the reason discussed above, the Commisison finds that the proposed rule change is consistent with the requirements of the Act and the rules and regulations thereunder applicable to a national securities exchange and, in particular, the requirements of section 6 and the rules and regulations thereunder.

The Commission finds good cause for approving the proposed rule change to prior the thirtieth day after the date of publication of notice of filing thereof, in that, in doubling the XMI index, Amex is basically following the same procedures and rules that apply to options on individual stocks that have undergone reverse stock splits.[11] The Commission is satisfied that the rules applicable to doubling the index value and the subsequent trading of old and new XM index options amount to the same treatment accorded individual options when the underlying stock has undergone a reverse stock split and thus accelerated approval is appropriate. As to the proposal to change position and exercise limits, the Commission recently published for public comment, considered and approved limits based on a fixed number of contracts, rather than a dollar amount, for broad-based index options.[12] In addition, the proposed limits only represent a slight increase in authorized limits for the new XMI index options. The proposal does not represent any change in the limits currently applicable to the XAM index options. As discussed above, the Commission believes that the small change in limits for the XMI will have a minimal effect.[13] Based on the above, the Commission believes good cause exists for approving the proposed rule changes on an accelerated basis.

It is therefore ordered, pursuant to section 19(b)(2) of the Act, that the proposed rule changes referenced above be, and hereby is, approved.

For the Commission, by the Division of Market Regulation pursuant to delegated authority.

Shirley E. Hollis,

Assistant Secretary.

[FR Doc. 84-19028 Filed 7-17-84; 8:45 am]

BILLING CODE 8010-01-M

limits of $200 million. Amex is authorized to set limits as high as 18,000 contracts (which would be equal to 9,000 contracts for the doubled index). Thus, the proposed 10,000 contract limits represent only an 11 percent increase over the current maximum allowable position and exercise limits.

[11] We note that normal procedures do not require the exchanges to submit a proposed rule change to the Commission when a stock underlying an exchange traded option undergoes a reverse stock split. However, since the changes at issue here necessitate a modification of the index option's contract specifications, the Commission believes it is necessary and appropriate to review the changes.

[12] *See* PSE Rule XXI, section 6(d). The proposed rule was approved by the Commission in File No. SR-PSE-84-7, Securities Exchange Act Release No. 21032, June 8, 1984, 49 FR 24964, June 18, 1984.

[13] As noted above, the Commission also has received proposals from Amex, CBOE and NYSE for more substantial position and exercise limit increases. *See* note 8, *supra*. These proposals have been published for comment for more than 30 days. No comments have been received on any of these proposals.

[Release No. 21134; SR-Amex-82-27]

Self-Regulatory Organizations; American Stock Exchange, Inc.; Order Partially Approving Proposed Rule Change

July 12, 1984.

I. Introduction

The American Stock Exchange, Inc. ("Amex"), 86 Trinity Place, New York, NY-10006, submitted on December 30, 1982, copies of a proposed rule change pursuant to Section 19(b)(1) of the Securities Exchange Act of 1934 (the "Act") and Rule 19b-4 thereunder, to allow options specialist firms [1] to: (1) Engage in certain business transactions with the issuer or insiders of the issuer of the security underlying a specialty option; (2) make recommendations for the purchase or sale of the securities underlying specialty options; and (3) accept specialty options orders from small pension and profit sharing funds.[2] On April 2, 1984, Amex amended the portion of the proposed rule change relating to an options specialist's recommendations for the purchase or sale of the securities underlying his specialty option; under this amendment an options specialist would be allowed to make such recommendations if they are contained in research reports of a specific description.[3] In addition, in Amendment No. 1, Amex proposed to allow options specialists to participate as selling group members in underwritings of non-convertible senior securities of issuers of the securities underlying the specialty firm's specialty options.[4] No comments have been received with respect to the proposed rule change.

The Amex has consented to an extension of time to July 31, 1984, for Commission action on that portion of the proposed rule change that relates to recommendations by an options specialist for the purchase or sale of securities underlying his specialty options.[5] The Commission is not taking action, therefore, on that portion of the proposed rule change at this time.

II. Discussion

A. Transactions Between Options Specialist and Issuer

The first portion of Amex's proposed rule change would amend Amex Rule 950(k) to prohibit an options specialist, his member organization, and members, employees and approved persons of the member organization [6] from engaging in

[1] Some portions of the proposed rule change apply only to the specialist and his firm and other portions apply also to employees and approved persons (e.g., parent corporations) of the specialist firm. The discussion below indicates which of these persons and entities are affected by each portion of the proposal.

[2] Notice of the proposed change was given by the issuance of a Commission release (Securities Exchange Act Release No. 19558, March 1, 1983), and by publication in the Federal Register (48 FR 10169, March 10, 1983).

[3] Under the original rule filing, recommendations by options specialists of purchases or sales of the securities underlying their specialty options could be made if the firm had in place specified "Chinese Wall" procedures.

[4] Notice of Amendment No. 1 was given by publication of a Commission Release (Securities Exchange Act Release No. 20841, April 9, 1984) and by publication in the Federal Register (49 FR 15040, April 18, 1984).

[5] *See* letter dated June 23, 1984, from Michael S. Emen, Vice President, Legal and Regulatory Policy Division, Amex, to Alden Adkins, Division of Market Regulation, SEC.

[6] These persons and entities are referred to as the "specialist" or the options specialist throughout the rest of this Section IIA.

material business transactions with the issuer and insiders of the issuer of a security underlying the specialist's specialty option. Currently, Rule 950(k) prohibits all transactions between the specialist and the issuers of securities underlying a specialty option. Material transactions are defined to include transactions that are material in value to the specialist or the issuer; that would provide access to material, non-public information relating to the issuer; or that would give rise to a control relationship between the issuer and the specialist. Amex would, however, retain the separate prohibition against an options specialist, his member organization or a subsidiary of the member organization effecting transactions in a specialty option for the issuer or its insiders.[7] Amex also states that the rule would not allow options specialists to effect transactions for issuers or affiliates of issuers in the underlying stocks themselves.[8]

In its filing, Amex states that the purpose of the existing prohibition against transactions between options specialists and issuers of underlying stocks is to prevent the establishment of a relationship through which an options specialist firm could obtain non-public corporate information from an issuer, or an issuer could obtain non-public information from an options specialist. Amex argues that the current rule is broader than is necessary to achieve this purpose, and as such prohibits transactions that have little potential for abuse. Amex states that the proposed amendments to the rule have been designed to achieve the purposes underlying the current rule while allowing business transactions that the current rule unnecessarily forbids.[9]

The Commission finds that the central purpose behind Amex's rule relating to transactions between options specialists and issuers is as Amex describes it. We also find that under Amex's proposed amendment to this rule, this purpose will continue to be served by proscribing transactions that are subject to possible abuse while permitting business transactions that do not raise the concerns the rule is intended to prevent. Furthermore, by redesigning the rule in this fashion Amex will be able to eliminate a deterrent to diversified firms acting or contemplating to act as options specialists without sacrificing the basic regulatory purposes served by the rule. The Commission therefore also finds that the rule is designed to attract additional capital to the Amex options floor and potentially to enhance competition, thereby improving the quality of Amex's market, without compromising the central regulatory function of this rule. For these reasons, the Commission finds that the proposed rule change is consistent with the protection of investors and the public and with the maintenance of fair and orderly markets.

B. Accepting Orders From Small Pension and Profit-Sharing Plans

Under Amex's proposal, an options specialist, his member organization and corporate subsidiaries of the member organization would be allowed to accept unsolicited orders for the purchase or sale of the specialist's specialty options directly from pension or profit-sharing funds with assets of $5 million or less. Currently, Amex rules prohibit an options specialist, his member organization or corporate subsidiaries from accepting orders for specialty options directly from any pension or profit-sharing funds.[10]

Amex's rule prohibiting an options specialist from accepting specialty options orders directly from specified entities including pension or profit-sharing funds is designed to prevent a specialist from giving or being pressured into giving favored treatment to such orders. The Commission finds that an options specialist is unlikely to have an incentive to give or to be pressured into giving favored treatment to options orders from pension or profit-sharing plans with assets of $5 million or less.[11] At the same time, by making an additional group of firms eligible to execute orders from small pension and profit-sharing plans, the rule may facilitate the efficient and cost-effective execution of orders for such entities. Furthermore, the Commission finds that this proposed rule amendment, like the one discussed previously, is designed to eliminate a disincentive to diversified firms from acting or contemplating acting as options specialists; as such, the rule amendment may serve to attract more capital to Amex's option markets and, thus, improve the quality of those markets. For these reasons, the Commission finds that this portion of the proposed rule change is consistent with the protection of investors and the public interest, and with the maintenance of fair and orderly markets.

C. Participation by Options' Specialists in Certain Underwritings

Amex also proposes to allow its options' specialists and their firms to participate as selling group members in firm commitment underwriting syndicates for the distribution of non-convertible senior securities of issuers of securities underlying the specialist's specialty options. The Commission finds that this portion of the proposed rule change comports with Rule 10b-6 under the Act,[12] and is otherwise consistent with the protection of investors and the public interest.

III. Conclusion

For the reasons discussed above, the Commission finds that the portions of the proposed rule change discussed above are consistent with the requirements of the Act and the rules and regulations thereunder applicable to a national securities exchange, and, in particular, the requirements of sections 6 and 11 and the rules and regulations thereunder.

It is therefore ordered, pursuant to section 19(b)(2) of the Act, that the portions of the proposed rule change discussed above are approved.

For the Commission, by the Division of Market Regulation, pursuant to delegated authority.

Shirley E. Hollis,

Assistant Secretary.

[FR Doc. 84-15027 Filed 7-17-84; 8:45 am]

BILLING CODE 8010-01-M

[7] *See* Amex Rule 190(b), as applied to options specialist in Rule 950(k).

[8] *See* letter dated March 29, 1984, from Fred M. Stone, Senior Vice President and General Counsel, Amex, to Richard Chase, Division of Market Regulation, SEC. A copy of this letter is contained in File No. SR-Amex-82-27.

[9] Amex states that the proposed rule amendment would allow an options specialist, among other things, to handle brokerage accounts for the issuer in securities other than the issuer's own securities; to handle commodities trading accounts for an issuer; and allow an account executive of the specialist's firm to retain the account of someone who becomes an affiliate of an issuer in whose options the firm specializes.

[10] This rule also prohibits the acceptance of orders for specialty options directly from the issuer; from affiliates of the issuer; or from banks, insurance companies, investment companies or similar institutions.

[11] As Amex points out in its filing, many plans of this size are established for the benefit of individuals or small groups of individuals and, thus, orders from such plans are in this respect more similar to orders from individuals than from institutions.

[12] Rule 10b-6 under the Act (17 CFR 240.10b-6), does not prohibit a participant in a distribution of an issue of non-convertible debt securities from bidding for or purchasing rights to purchase (*e.g.* options) equity securities of the issuer of the non-convertible debt securities being distributed. *See* Rule 10b-6(a)(3).

[Release No. 21142; SR-Phlx-84-11]

Self-Regulatory Organizations; Philadelphia Stock Exchange, Inc., Order Approving Proposed Rule Change

July 12, 1984.

The Philadelphia Stock Exchange, Inc. ("Phlx") 1900 Market Street, Philadelphia, PA 19103, submitted on May 21, 1984, copies of a proposed rule change pursuant to section 19(b)(1) of the Securities Exchange Act of 1934 (the "Act") and Rule 19b-4 thereunder, to amend and consolidate the requirements of Phlx Rules 703, 706, 711 and 1021 into one rule, to be designated Phlx Rule 703, governing financial responsibility and reporting for Phlx members and foreign currency options participants. Proposed Rule 703 would set an initial net liquid assets requirement of $25,000 for both member and foreign currency option participant organizations which are exempt from SEC Rule 15c3-1, and establish new financial maintenance requirements for such organizations. The maintenacne requirements would be $50,000 for equity-only specialists, $75,000 for options-only specialists, $100,000 for equity-and-options specialists and, for registered options traders, either $25,000 or positive net liquid assets only, so long as an options trader has filed with the Exchange a letter of guarantee issued on its behalf by the Phlx clearing member handling its accounts. In addition, the proposed amendment would create a formula for the computation of net liquid assets for Phlx members and foreign currency options participants which would allow as an asset comprising up to one-half of an organization's capital maintenance requirement the amount of one-third of the current bid for such memberships or participations. The proposed rule would also establish monthly, quarterly and annual reporting requirements for organizations designated to the Exchange under SEC Rule 17d-1 and exempt from the reporting provisions of SEC Rule 17a-5, and would set specific due dates and revised late fee schedules for the filing of such reports.

Notice of the proposed rule change together with the terms of substance of the proposed rule change was given by the issuance of a Commission Release (Securities Exchange Act Release No. 21023; June 4, 1984) and by publication in the Federal Register (49 FR 24092, June 11, 1984). No comments were received with respect to the proposed rule change.

The Commission finds that the proposed rule change is consistent with the requirements of the Act and the rules and regulations thereunder applicable to a national securities exchange and, in particular, the requirements of section 6 and the rules and the regulations thereunder.

It is therefore ordered, pursuant to section 19(b)(2) of the Act, that the above-mentioned proposed rule change be, and hereby is, approved.

For the Commission, by the Division of Market Regulation pursuant to delegated authority.

Shirley E. Hollis,

Assistant Secretary.

[FR Doc. 84-19031 Filed 7-17-84; 8:45 am]

BILLING CODE 8010-01-M

Self-Regulatory Organizations; Philadelphia Stock Exchange, Inc.; Application for Unlisted Trading Privileges and of Opportunity for Hearing

July 12, 1984.

The above named national securities exchange has filed an application with the Securities and Exchange Commission pursuant to section 12(f)(1)(B) of the Securities Exchange Act of 1934 and Rule 12f-1 thereunder, for unlisted trading privileges in the common stock of:

RPC Energy Services, Inc.

Common Stock, $.10 Par Value (File No. 7-7554)

This security is listed and registered on one or more other national securities exchange and is reported on the consolidated transaction reporting system.

Interested persons are invited to submit on or before August 2, 1984 written data, views and arguments concerning the above-referenced application. Persons desiring to make written comments should file three copies thereof with the Secretary of the Securities and Exchange Commission, Washington, D.C. 20549. Following this opportunity for hearing, the Commission will approve the application if it finds, based upon all the information available to it, that the extension of unlisted trading privileges pursuant to such application is consistent with the maintenance of fair and orderly markets and the protection of investors.

For the Commission, by the Division of Market Regulation, pursuant to delegated authority.

Shirley E. Hollis,

Assistant Secretary.

[FR Doc. 84-19032 Filed 7-17-84; 8:45 am]

BILLING CODE 8010-01-M

DEPARTMENT OF TRANSPORTATION

Federal Highway Administration

Environmental Impact Statement; Clackamas County, OR

AGENCY: Federal Highway Administration (FHWA), DOT.

ACTION: Notice of Intent.

SUMMARY: The FHWA is issuing this notice to advise the public that an environmental impact statement will be prepared for a proposed highway project in Clackamas County.

FOR FURTHER INFORMATION CONTACT: Richard R. Arnold, Environmental Coordinator and Safety Programs Engineer, Federal Highway Administration, Equitable Center, Suite 100, 530 Center Street NE., Salem, Oregon 97301. Telephone (503) 399-5749.

SUPPLEMENTARY INFORMATION: The FHWA in cooperation with the Oregon Department of Transportation and Clackamas County will prepare an environmental impact statement (EIS) on the proposed 2,000-foot extension of Hubbard Road east and south to Highway 212 and 135th Avenue. The proposed extension is necessary to improve north-south road systems connectivity and to provide adequate road infrastructure for the planned development of the area.

The right-of-way for the proposed extension is owned by Clackamas County. The proposal is for a 36-foot wide, curb-to-curb improvement containing two, 12-foot travel lanes with a 6-foot bike lane on each side. The proposed intersection at Highway 212 and a number of future intersections will be channelized. The one Build Alternative and a No Build Alternative are being advanced.

A Technical Advisory Committee (TAC) and a Citizens Advisory Committee (CAC) have met regularly to advise on the project. Information describing the proposed action will be sent to the appropriate Federal, State, and local agencies and to private organizations and citizens who have previously expressed interest in this proposal. Public meetings will be held, as may be necessary, and a public hearing will be held. No formal scoping meeting is planned at this time.

Comments or questions concerning this proposed action, and the EIS, should be directed to the FHWA at the address provided above.

(Catalog of Federal Domestic Assistance Program Number 20.205, Highway Reseach, Planning and Construction)

The provisions of Executive Order 12372, "Intergovernmental Review of Federal Programs" apply to this program.

Issued on: July 9, 1984.

Richard R. Arnold,

Environmental Coordinator/Safety Program Engineer, Oregon Division, Salem, Oregon.

[FR Doc. 84-18975 Filed 7-17-84; 8:45 am]

BILLING CODE 4910-22-M

Research and Special Programs Administration

Grants and Denials of Applications for Exemptions

AGENCY: Materials Transportation Bureau, DOT.

ACTION: Notice of Grants and Denials of Applications for Exemptions.

SUMMARY: In accordance with the procedures governing the application for, and the processing of, exemptions from the Department of Transportation's Hazardous Materials Regulations (49 CFR Part 107, Subpart B), notice is hereby given of the exemptions granted in June 1984. The modes of transportation involved are identified by a number in the "Nature of Exemption Thereof" portion of the table below as follows: 1—Motor vehicle, 2—Rail freight, 3—Cargo vessel, 4—Cargo-only aircraft, 5—Passenger-carrying aircraft. Application numbers prefixed by the letters EE represent applications for Emergency Exemptions.

Renewal and Party to Exemptions

Application No.	Exemption No.	Applicant	Regulation(s) affected	Nature of exemption thereof
4453-P	DOT-E 4453	Mining Services, International Corp., Salt Lake City, UT.	49 CFR 173.114a(h)(3)	To become a party to Exemption 4453. (mode 1.)
4453-X	DOT-E 4453	Strawn Explosives, Inc., Dallas, TX	49 CFR 173.114a(h)(3)	To authorize use of a non-DOT specification bulk, hopper-type tank, for transportation of blasting agent, n.o.s., or ammonium nitrate-fuel oil mixtures. (mode 1.)
7409-X	DOT-E 7409	Sea-Land Service, Inc., Elizabeth, NJ	49 CFR 173.118a, 173.125, 176.340	To authorize use of a modified DOT specification cargo tank, for transportation of flammable or combustible liquids. (mode 3.)
7621-X	DOT-E 7621	Great Lakes Chemical Corp., El Dorado, AR.	49 CFR 173.357	To authorize use of DOT Specification 51 ISO portable tanks, for shipment of poison B liquid. (modes 1, 2, 3.)
7753-X	DOT-E 7753	Stauffer Chemical Co., Westport, CT	49 CFR 173.190(b)(2)	To authorize shipment of yellow phosphorous in a tight-head 55-gallon DOT Specification 17C drum. (modes 1, 2, 3.)
7753-X	DOT-E 7753	Monsanto Co., St. Louis, MO	49 CFR 173.190(b)(2)	To authorize shipment of yellow phosphorous in a tight-head 55-gallon DOT Specification 17C drum. (modes 1, 2, 3.)
8006-X	DOT-E 8006	Bland Bros., Inc., Miami, FL	49 CFR 172.400(a), 172.504 Table 2	To authorize transport of unlabeled packages of toy paper or plastic caps complying with the requirements of 173.100(p) and 173.109, in motor vehicles with placards, when the gross weight of the caps is 1000 pounds or more. (mode 1.)
8009-X	DOT-E 8009	FIBA Leasing Co., Inc., Westborough, MA.	49 CFR 172.101, 173.301(d)(2), 173.302(a)(3).	To authorize use of DOT Specification 3AAX cylinders made of 4130X steel, for transportation of a compressed natural gas. (mode 1.)
8009-X	DOT-E 8009	Consolidated Petroleum Explorations, Inc., Greenwood, IN.	49 CFR 172.101, 173.301(d)(2), 173.302(a)(3).	To authorize use of DOT Specification 3AAX cylinders made of 4130X steel, for transportation of a compressed natural gas. (mode 1.)
8009-X	DOT-E 8009	Natural Gas Transmission, Inc., Oklahoma City, OK.	49 CFR 172.101, 173.301(d)(2), 173.302(a)(3).	To authorize use of DOT Specification 3AAX cylinders made of 4130X steel, for transportation of a compressed natural gas. (mode 1.)
8009-X	DOT-E 8009	Tri-Energy, Inc., Prairie Village, KS	49 CFR 172.101, 173.301(d)(2), 173.302(a)(3).	To authorize use of DOT Specification 3AAX cylinders made of 4130X steel, for transportation of a compressed natural gas. (mode 1.)
8156-P	DOT-E 8156	Spectra Gases, Inc., Newark, NJ	49 CFR 173.121, 173.302(a)(4), 173.302(f), 173.304(a)(1).	To become a party to Exemption 8156. (modes 1, 2.)
8337-X	DOT-E 8337	I.M.E., Inc., Galva, IL	49 CFR 173.119 (a), (m), 173.245(a), 178.340-7, 178.342-5, 178.343-5, 178.346(a).	To authorize manufacture, marking and sale of non-DOT Specification cargo tanks complying with DOT Specification MC-307/312 except for bottom outlet valve variation, for shipment of liquid and semi-solid waste material. (mode 1.)
8388-X	DOT-E 8388	B.W. Norton Manufacturing Co., Inc., Oakland, CA.	49 CFR 178.19, Part 173, Subpart D, F.	To authorize manufacture, marking and sale of non-DOT specification removable head molded polyethylene drum, for shipment of corrosive and flammable liquids. (modes 1, 2, 3.)
8453-P	DOT-E 8453	Nelson Brothers, Inc., Parrish, AL	49 CFR 173.114a	To become a party to Exemption 8453. (mode 1.)
8723-X	DOT-E 8723	Ireco Chemicals, Salt Lake City, UT	49 CFR 173.114a(h)(3)	To authorize an additional bulk tank motor vehicle, for transportation of certain blasting agents. (mode 1.)
8723-X	DOT-E 8723	Ireco Chemicals, Salt Lake City, UT	49 CFR 173.114a(h)(3)	To authorize a 2,000 gallon skid mounted tank, for shipment of blasting agent. (mode 1.)
8815-P	DOT-E 8815	Nelson Brothers, Inc., Parrish, AL	49 CFR 173.114a(b)	To become a party to Exemption 8815. (mode 1.)
8822-X	DOT-E 8822	Certified Tank Manufacturing, Inc., Wilmington, CA.	49 CFR 173.119 (a), (m), 173.245(a), 173.346(a), 178.340-7, 178.342-5, 178.343-5.	To authorize manufacture, marking and sale of non-DOT specification cargo tanks made in full compliance with DOT Specification MC-307 or MC-312 with certain exceptions, for transportation of certain waste hazardous materials. (mode 1.)
8840-X	DOT-E 8840	Walter Kidde & Company, Inc., Belleville, NJ.	49 CFR 173.23(c), 173.302(a)(5), 175.3.	To authorize manufacture, marking and sale of non-DOT specification inside seamless aluminum containers, for transportation of various compressed gases. (modes 1, 2, 3, 4.)
8842-X	DOT-E 8842	HTL Industries, Inc., Duarte, CA	49 CFR 173.302(a), 175.3, 178.44	To authorize use of non-DOT specification small, high pressure cylinders of welded construction for aircraft use or military weapons system only. (modes 1, 2, 4, 5.)
9108-P	DOT-E 9108	E.I. du Pont de Nemours & Co., Inc., Wilmington, DE.	49 CFR 173.77	To become a party to Exemption 9108. (mode 1.)
9201-X	DOT-E 9201	Cyanamid Canada, Inc., East Willowdale, Canada.	49 CFR 173.370	To increase weight per bag to not more than 4,400 pounds and to secure bag in box unit to a wood or equally strong pallet base. (mode 3.)
9222-X	DOT-E 9222	Caldwell Systems, Inc., Lenoir, NC	49 CFR 173.119(b), 173.154	To authorize use of non-DOT specification metal tanks, for transportation of a flammable liquid or flammable solid. (mode 1.)
9222-X	DOT-E 9222	Seaboard Chemical Corp., Jamestown, NC.	49 CFR 173.119(b), 173.154	To authorize use of non-DOT specification metal tanks, for transportation of a flammable liquid or flammable solid. (mode 1.)

New Exemptions

Application No.	Exemption No.	Applicant	Regulation(s) affected	Nature of exemption thereof
9229-N	DOT-E 9229	Capilano Plastics Inc., Bellevue, WA	49 CFR 178.19, Part 173, Subpart D, F.	To authorize manufacture, marking and sale of non-DOT specification removable head molded polyethylene containers without overpack, for transportation of corrosive and flammable liquids. (modes 1, 2, 3.)

NEW EXEMPTIONS—Continued

Application No.	Exemption No.	Applicant	Regulation(s) affected	Nature of exemption thereof
9245-N	DOT-E 9245	Contico Container, Norwalk, CA	49 CFR 178.19, Part 173, Subpart D, F.	To authorize manufacture, marking and sale of non-DOT specification removable head molded polyethylene containers without overpack, for transportation of corrosive and flammable liquids. (modes 1, 2, 3.)

EMERGENCY EXEMPTIONS

Application No.	Exemption No.	Applicant	Regulation(s) affected	Nature of exemption thereof
EE 8525-X	DOT-E 8525	ABC Containerlines, N.V., Antwerp, Belgium.	49 CFR 173.389(c)(1), 173.392(c), 176.700(b)(1), 176.700(b)(2).	To authorize shipment of mineral monazite sand, classed as radioactive material, low specific activity, n.o.s. under modified exclusive use provisions. (modes 1, 2, 3.)

WITHDRAWALS

Application No.	Applicant	Regulation(s) affected	Nature of exemption thereof
6007-X	Nuclear Products Co., El Monte, CA	49 CFR 173.391(b)(5), 175.3	To authorize transport of certain devices containing a greater quantity of polonium—210 that is normally authorized under the provision of 49 CFR 173.391(b). (modes 1, 2, 3, 4, 5.)
6908-X	The Garrett Corp., Tempe, AZ	49 CFR 173.302(a)(1), 175.3, 178.65	To authorize certain variances from the specifications for DOT Specification 39 cylinders, for shipment of certain nonflammable gases. (modes 1, 2, 3, 4.)
6971-P	Alltech Associates, Inc., Deerfield, IL	49 CFR Parts 100-199	To become a party to Exemption 6971. (modes 1, 2, 3, 4, 5.)

Issued in Washington, DC, on July 9, 1984.

J.R. Grothe,

Chief,

Exemptions Branch, Office of Hazardous Materials Regulation, Materials Transportation Bureau.

[FR Doc. 84-18934 Filed 7-17-84; 8:45 am]

BILLING CODE 4910-60-M

VETERANS ADMINISTRATION

Agency Form Under OMB Review

AGENCY: Veteran Administration.

ACTION: Notice.

SUMMARY: The Veterans Administration has submitted to OMB for review the following proposal for the collection of information under the provisions of the Paperwork Reduction Act (44 U.S.C. Chapter 35). This document contains an extension and a revision and lists the following information: (1) The Department or Staff Office issuing the form; (2) The title of the form; (3) The agency form number, if applicable; (4) How often the form must be filled out; (5) Who will be required or asked to report; (6) An estimate of the number of responses; (7) An estimate of the total number of hours needed to fill out the form; and (8) An indication of whether section 3504(h) of Pub. L. 96-511 applies.

ADDRESSES: Copies of the form and supporting documents may be obtained from Patricia Viers, Agency Clearance Officer (732), Veterans Administration, 810 Vermont Avenue, NW, Washington, DC 20420, (202) 389-2146. Comments and questions about the items on this list should be directed to the VA's OMB Desk Officer, Dick Eisinger, Office of Management and Budget, 726 Jackson Place NW, Washington, DC 20503, (202) 395-6880.

DATES: Comments on the information collections should be directed to the OMB Desk Officer within 60 days of this notice.

Dated: July 12, 1984.

By direction of the Administration.

Dominick Onorato,

Associate Deputy Administrator for Information Resources Management.

Extension

1. Department of Veterans Benefits
2. Claim for Credits Due Estate of Deceased Veteran
3. VA Form 29-4338
4. On occasion
5. Individuals or households
6. 76 responses
7. 13 hours
8. Not applicable

Revision

1. Department of Veterans Benefits
2. Trainee Request for Leave—Chapter 31, Title 38, U.S.C
3. VA Form 28-1905h
4. On occasion
5. Individuals or households
6. 30,000 responses
7. 7,500 hours
8. Not applicable.

[FR Doc. 84-18931 Filed 7-17-84; 8:45 am]

BILLING CODE 8320-01-M

Sunshine Act Meetings

Federal Register
Vol. 49, No. 139
Wednesday, July 18, 1984

This section of the FEDERAL REGISTER contains notices of meetings published under the "Government in the Sunshine Act" (Pub. L. 94-409) 5 U.S.C. 552b(e)(3).

CONTENTS

	Item
Federal Deposit Insurance Corporation	1-5
Federal Maritime Commission	6
Federal Reserve System	7
International Trade Commission	8-9
National Transportation Safety Board	10

1

FEDERAL DEPOSIT INSURANCE CORPORATION

Agency Meeting

Pursuant to the provisions of the "Government in the Sunshine Act" (5 U.S.C. 552b), notice is hereby given that at 5:15 p.m. on Thursday, July 12, 1984, the Board of Directors of the Federal Deposit Insurance Corporation met in closed session, by telephone conference call, to: (1) Receive bids for the purchase of certain assets of and the assumption of the liability to pay deposits made in The Coffeen National Bank, Coffen, Illinois, which was closed by the Senior Deputy Comptroller for National Operations, Office of the Comptroller of the Currency, on Thursday, July 12, 1984; (2) accept the bid for the transaction submitted by Coffeen State Bank, Coffeen, Illinois, a newly-chartered state nonmember bank subsidiary of Sangamon Bancshares II, Inc., Springfield, Illinios; (3) adopt an order approving the application of Coffeen State Bank, Coffeen, Illinois, for Federal deposit insurance, and for consent to purchase certain assets of and to assume the liability to pay deposits made in The Coffeen National Bank, Coffeen, Illinois; and (4) provide such financial assistance, pursuant to section 13(c)(2) of the Federal Deposit Insurance Act (12 U.S.C. 1823(c)(2)), as was necessary to facilitate the purchase and assumption transaction.

In calling the meeting, the Board determined, on motion of Chairman William M. Isaac, seconded by Michael A. Mancusi, acting in the place and stead of Director C.T. Conover (Comptroller of the Currency), that Corporation business required its consideration of the matters no less than seven days' notice to the public; that no earlier notice of the meeting was practicable; that the public interest did not require consideration of the matters in a meeting open to public observation; and that the matters could be considered in a closed meeting pursuant to subsections (c)(8), (c)(9)(A)(ii), and (c)(9)(B) of the "Government in the Sunshine Act" (5 U.S.C. 552b (c)(8), (c)(9)(A)(ii), and (c)(9)(B)).

Dated: July 13, 1984.

Federal Deposit Insurance Corporation.

Hoyle L. Robinson,

Executive Secretary.

[FR Doc. 84-19022 Filed 7-13-84; 4:35 pm]

BILLING CODE 6714-01-M

2

FEDERAL DEPOSIT INSURANCE CORPORATION

Cancellation of Agency Meetings

Pursuant to the provisions of the "Government in the Sunshine Act" (5 U.S.C. 552b), notice is hereby given that the previously announced meetings of the Board of Directors of the Federal Deposit Insurance Corporation scheduled to be held on Monday, July 16, 1984 at 2:00 p.m. (open session) and 2:30 p.m. (closed session) have been *Cancelled.* The matters scheduled to be considered by the Board of Directors at those meetings will be rescheduled for consideration at the Board's July 23, 1984 meetings.

No earlier notice of these cancellations was practicable.

Dated: July 13, 1984.

Federal Deposit Insurance Corporation.

Hoyle L. Robinson,

Executive Secretary.

[FR Doc. 84-19023 Filed 7-13-84; 4:35 pm]

BILLING CODE 6714-01-M

3

FEDERAL DEPOSIT INSURANCE CORPORATION

Agency Meeting

Pursuant to the provisions of the "Government in the Sunshine Act" (5 U.S.C. 552b), notice is hereby given that at 4:03 p.m. on Friday, July 13, 1984, the Board of Directors of the Federal Deposit Insurance Corporation met in closed session to consider a recommendation with respect to the administrative enforcement proceeding against an insured bank (name and location of bank authorized to be exempt from disclosure pursuant to subsections (c)(6), (c)(8), and (c)(9)(a)(ii) of the "Government in the Sunshine Act" (5 U.S.C. 552b (c)(6), (c)(8), and (c)(9)(A)(ii)).

In calling the meeting, the Board determined, on motion of Chairman William M. Isaac, seconded by Director Irvine H. Sprague (Appointive), concurred in by Director C. T. Conover (Comptroller of the Currency), that Corporation business required its consideration of the matter on less than seven days' notice to the public; that no earlier notice of the meeting was practicable; that the public interest did not require consideration of the matter in a meeting open to public observation; and that the matter could be considered in a closed meeting pursuant to subsections (c)(6), (c)(8), and (c)(9)(A)(ii) of the "Government in the Sunshine Act" (5 U.S.C. 552b (c)(6), (c)(8), and (c)(9)(A)(ii)).

The meeting was held in the Chairman's Office, Room 6023 of the FDIC Building located at 550 17th Street, NW., Washington, DC.

Dated: July 16, 1984.

Federal Deposit Insurance Corporation.

Hoyle L. Robinson,

Executive Secretary.

[FR Doc. 84-18324 Filed 7-16-84; 3:23 pm]

BILLING CODE 6714-01-M

4

FEDERAL DEPOSIT INSURANCE CORPORATION

Agency Meeting

Pursuant to the provisions of the "Government in the Sunshine Act" (5 U.S.C. 552b), notice is hereby given that the Federal Deposit Insurance Corporation's Board of Directors will meet in open session at 2:00 p.m. on Monday, July 23, 1984, to consider the following matters:

Summary Agenda: No substantive discussion of the following items is anticipated. These matters will be resolved with a single vote unless a member of the Board of Directors requests that an item be moved to the discussion agenda.

Disposition of minutes of previous meetings.

Applications for Federal deposit insurance:

Fireside Thrift Company, an operating noninsured industrial bank located at 401 Warren Street, Redwood City, California.
Republic Bank, a proposed new bank to be located at 3200 Beecher Road, Flint Township, Michigan.

Applications for Federal deposit insurance and for consent to purchase assets and assume liabilities and establish one branch:

Cedar Security Bank, Fordyce, Nebraska, a proposed new bank, for Federal deposit insurance, for consent to purchase the assets of and assume the liability to pay deposits made in the Fordyce Cooperative Credit Association, Fordyce, Nebraska, and the Wynot Cooperative Credit Association, Wynot, Nebraska, operating noninsured institutions, and for consent to establish the sole office of Wynot Cooperative Credit Association as a branch of Cedar Security Bank.

Recommendation regarding the liquidation of a bank's assets acquired by the Corporation in its capacity as receiver, liquidator, or liquidating agent of those assets:

Case No. 46,078-NR—Penn Square Bank, National Association Oklahoma City, Oklahoma

Reports of committees and officers:

Minutes of actions approved by the standing committees of the Corporation pursuant to authority delegated by the Board of Directors.
Reports of the Division of Bank Supervision with respect to applications, requests, or actions involving administrative enforcement proceedings approved by the Director or an Associate Director of the Division of Bank Supervision and the various Regional Directors pursuant to authority delegated by the Board of Directors.

Discussion Agenda: No matters scheduled.

The meeting will be held in the Board Room on the sixth floor of the FDIC Building located at 550-17th Street, NW., Washington, D.C.

Requests for further information concerning the meeting may be directed to Mr. Hoyle L. Robinson, Executive Secretary of the Corporation, at (202) 389-4425.

Dated: July 16, 1984.

Federal Deposit Insurance Corporation.

Hoyle L. Robinson,

Executive Secretary.

[FR Doc. 84-19116 Filed 7-16-84; 3:31 pm]

BILLING CODE 6714-01-M

5

FEDERAL DEPOSIT INSURANCE CORPORATION

Agency Meeting

Pursuant to the provisions of the "Government in the Sunshine Act" (5 U.S.C. 552b), notice is hereby given that at 2:30 p.m. on Monday, July 23, 1984, the Federal Deposit Insurance Corporation's Board of Directors will meet in closed session, by vote of the Board of Directors, pursuant to sections 552b(c)(2), (c)(6), (c)(8), and (c)(9)(A)(ii) of Title 5, United States Code, to consider the following matters:

Summary Agenda: No substantive discussion of the following items is anticipated. These matters will be resolved with a single vote unless a member of the Board of Directors requests that an item be moved to the discussion agenda.

Recommendations with respect to the initiation, termination, or conduct of administrative enforcement proceedings (cease-and-desist proceedings, termination-of-insurance proceedings, suspension or removal proceedings, or assessment of civil money penalties) against certain insured banks or officers, directors, employees, agents or other persons participating in the conduct of the affairs thereof:

Names of persons and names and locations of banks authorized to be exempt from disclosure pursuant to the provisions of subsections (c)(6), (c)(8), and (c)(9)(A)(ii) of the "Government in the Sunshine Act" (5 U.S.C. 552b(c)(6), (c)(8), and (c)(9)(A)(ii)).

Note.—Some matters falling within this category may be placed on the discussion agenda without further public notice if it becomes likely that substantive discussion of those matters will occur at the meeting.

Discussion Agenda:

Applications for Federal deposit insurance:

Citicorp Industrial Bank, an operating noninsured industrial bank located at 13901 E. Exposition Avenue, Aurora, Colorado.
Citicorp Person-to-Person Boulder Industrial Bank, an operating noninsured industrial bank located at 1600 38th Street, Suite 104, Boulder, Colorado.
Citicorp Person-to-Person Colorado Springs Industrial Bank, an operating noninsured industrial bank located at 2010 North Academy Boulevard, Colorado Springs, Colorado.
Citicorp Person-to-Person Denver Industrial Bank, an operating noninsured industrial bank located at #1 Barclay Plaza, 1675 Larimer, Denver, Colorado.
Citicorp Person-to-Person Englewood Industrial Bank, an operating noninsured industrial bank located at 701 W. Hampden, Unit K-2619, Englewood, Colorado.
Citicorp Person-to-Person Fort Collins Industrial Bank, an operating noninsured industrial bank located at 3050 South College Avenue, Fort Collins, Colorado.
Citicorp Person-to-Person Lakewood Industrial Bank, an operating noninsured industrial bank located at 7063 W. Alameda, Lakewood, Colorado.
Citicorp Person-to-Person Northglenn Industrial Bank, an operating noninsured industrial bank located at 10661 Melody Drive, Northglenn, Colorado.

Request for consent to retire common stock:

The Philadelphia Saving Fund Society, Horsham Township (P.O. Horsham), Pennsylvania.

Recommendation regarding the liquidation of a bank's assets acquired by the Corporation in its capacity as receiver, liquidator, or liquidating agent of those assets:

Memorandum and Resolution re: Penn Square Bank, National Association, Oklahoma City, Oklahoma

Personnel actions regarding appointments, promotions, administrative pay increases, reassignments, retirements, separations, removals, etc.:

Names of employees authorized to be exempt from disclosure pursuant to the provisions of subsections (c)(2) and (c)(6) of the "Government in the Sunshine Act" (5 U.S.C. 552b (c)(2) and (c)(6)).

The meeting will be held in the Board Room on the sixth floor of the FDIC Building located at 550 17th Street, NW., Washington, D.C.

Requests for further information concerning the meeting may be directed to Mr. Hoyle L. Robinson, Executive Secretary of the Corporation, at (202) 389-4425.

Dated: July 16, 1984.

Federal Deposit Insurance Corporation.

Hoyle L. Robinson,

Executive Secretary.

[FR Doc. 84-19119 Filed 7-16-84; 3:32 pm]

BILLING CODE 6714-01-M

6

FEDERAL MARITIME COMMISSION

"FEDERAL REGISTER" CITATION OF PREVIOUS ANNOUNCEMENT: July 12, 1984, 49 FR 28504.

PREVIOUSLY ANNOUNCED TIME AND DATE OF THE MEETING: July 18, 1984, 9:00 a.m.

CHANGE IN MEETING: Addition of the following item to the closed session:

3. Agreement Nos. 212-8347-10 *et al.*, Extension and Modification of the U.S./Argentina and U.S./Brazil Pools.

Bruce A. Dombrowski,

Assistant Secretary.

[FR Doc. 84-19101 Filed 7-16-84; 11:18 am]

BILLING CODE 6730-01-M

7

FEDERAL RESERVE SYSTEM

TIME AND DATE: 11:00 a.m., Monday, July 23, 1984.

PLACE: 20th Street and Constitution Avenue, NW., Washington, D.C. 20551.

STATUS: Closed.

MATTERS TO BE CONSIDERED:

1. Issues relating to Federal Reserve notes.
2. Personnel actions (appointments, promotions, assignments, reassignments, and salary actions) involving individual Federal Reserve System employees.
3. Any items carried forward from a previously announced meeting.

CONTACT PERSON FOR MORE INFORMATION: Mr. Joseph R. Coyne, Assistant to the Board; (202) 452-3204.

Dated: July 13, 1984.

James McAfee,

Associate Secretary of the Board.

[FR Doc. 84-19106 Filed 7-16-84; 12:07 pm]

BILLING CODE 6210-01-M

8

INTERNATIONAL TRADE COMMISSION

TIME AND DATE: 2:30 p.m., Monday, July 23, 1984.

PLACE: Room 117, 701 E Street NW., Washington, DC 20436.

STATUS: Open to the public.

MATTERS TO BE CONSIDERED:

1. Agenda.
2. Minutes.
3. Ratifications.
4. Petitions and complaints:
a. Pull-type golf cars and wheels thereof (Docket No. 1075).
5. Investigations 701-TA-215, -216, and -217 and 731-TA-191 through -195 [Preliminary] (Oil Country Tubular Goods from Argentina, Brazil, Korea, Mexico, and Spain)—briefing and vote.
6. Investigation 731-TA-145 [Final] (Certain Steel Valves and Parts Thereof from Japan)—briefing and vote.
7. Any items left over from previous agenda.

CONTACT PERSON FOR MORE INFORMATION: Kenneth R. Mason, *Secretary,* (202) 523-0161.

[FR Doc. 84-19020 Filed 7-13-84; 4:34 pm]

BILLING CODE 7020-02-M

9

INTERNATIONAL TRADE COMMISSION

TIME AND DATE: 11:00 a.m., Wednesday, July 25, 1984.

PLACE: Room 117, 701 E Street NW., Washington, D.C. 20436.

STATUS: Open to the public.

MATTERS TO BE CONSIDERED:

1. Investigation TA-201-53 (Certain Canned Tuna Fish)—briefing and vote on injury.
2. Investigations 701-TA-218 and -219 [Preliminary] (Cold-Rolled Carbon Steel Sheet and Carbon Steel Structural Shapes from the Republic of Korea)—briefing and vote.

CONTACT PERSON FOR MORE INFORMATION: Kenneth R. Mason, *Secretary,* (202) 523-0161.

[FR Doc. 84-19021 Filed 7-13-84; 4:34 pm]

BILLING CODE 7020-02-M

10

NATIONAL TRANSPORTATION SAFETY BOARD

[NM-84-26]

TIME AND DATE: 9 a.m., Tuesday, July 24, 1984.

PLACE: NTSB Board Room, 8th Floor, 800 Independence Ave., SW., Washington, D.C. 20594.

STATUS: Open.

MATTERS TO BE CONSIDERED:

1. *Pipeline Accident Report:* Columbia Gas of West Virginia, Inc., Explosion and Fire, South Charleston, West Virginia, October 17, 1983.
2. *Aircraft Accident Report:* Ground Collision Korean Airlines Flight 084 with SouthCentral Air flight 59, Anchorage International Airport, Anchorage, Alaska, December 23, 1983.
3. *Marine Accident Report:* Collision of the U.S. Passenger Vessel M/V YANKEE and the Liberian Freighter M/V HARBEL TAPPER in Rhode Island Sound, July 2, 1983.
4. *Request to Reopen Accident Investigation and Response Letter to Congresswoman Collins:* PSA Boeing 727/Gibbs Flite Service Cessna 172, San Diego, California, September 25, 1978.

CONTACT PERSON FOR MORE INFORMATION: Sharon Flemming, (202) 382-6525..

H. Ray Smith, Jr.,

Federal Register Liaison Officer.

July 13, 1984.

[FR Doc. 84-19039 Filed 7-16-84; 9:30 am]

BILLING CODE 7533-01-M

Federal Register

Wednesday
July 18, 1984

Part II

Environmental Protection Agency

40 CFR Part 300

National Oil and Hazardous Substances Pollution Contingency Plan; Final Rule

ENVIRONMENTAL PROTECTION AGENCY

40 CFR Part 300

[SWH-FRL-2596-7]

National Oil and Hazardous Substances Pollution Contingency Plan

AGENCY: Environmental Protection Agency (EPA).

ACTION: Final rule.

SUMMARY: Pursuant to Section 311(c)(2)(G) of the Clean Water Act and Section 105 of the Comprehensive Environmental Response, Compensation, and Liability Act of 1980, the Environmental Protection Agency is promulgating revisions to Subpart H of the National Oil and Hazardous Substances Pollution Contingency Plan (NCP), 40 CFR Part 300. Today's final rule amends Subpart H by specifying testing and data requirements for inclusion of a dispersant, surface collecting agent, or biological additive on the NCP Product Schedule. The final rule also provides that products on this schedule may be authorized for use on discharges of oil.

EFFECTIVE DATE: August 17, 1984.

FOR FURTHER INFORMATION CONTACT: L.M. Flaherty, Emergency Response Division (WH-548/B), Office of Emergency and Remedial Response, U.S. Environmental Protection Agency, 401 M Street, SW., Washington, D.C. 20460. Phone (202) 382-2196.

SUPPLEMENTARY INFORMATION: The contents of today's preamble are listed in the following outline:

I. Introduction
  A. Background of This Rulemaking
  B. Organization of the Final Rule
II. Summary of Changes From the Proposed Rule
III. Major Issues
  A. NCP Product Schedule
  B. EPA and State Concurrence
  C. Burning and Sinking Agents
  D. Toxicity and Effectiveness Tests
IV. Miscellaneous Comments
V. Summary of Supporting Analyses
  A. Classification Under Executive Order 12291
  B. Paperwork Reduction Act
  C. Certification Why a Regulatory Flexibility Analysis Is Not Necessary

I. Introduction

A. Background of This Rulemaking

Section 311(c)(2) of the Federal Water Pollution Control Act ("Clean Water Act" or "CWA"), 33 U.S.C. 1251 *et seq.*, requires the publication of a National Contingency Plan ("NCP") that includes:

(G) a schedule, prepared in cooperation with the States, identifying (i) dispersants and other chemicals, if any, that may be used in carrying out the Plan, (ii) the waters in which such dispersants and chemicals may be used, and (iii) the quantities of such dispersant or chemical which can be used safely in such waters, which schedule shall provide in the case of any dispersant, chemical, or waters not specifically identified in such schedule that the President, or his delegate, may, on a case-by-case basis, identify the dispersants and other chemicals which may be used, the waters in which they may be used, and the quantities which can be used safely in such waters * * *

The NCP published pursuant to Section 311(c)(2) of the CWA included an Annex X that complied with the above provision (see, e.g., 38 FR 21887, 21906, August 13, 1973). Annex X specified that, except in emergency situations, chemical agents could not be used to abate discharges of oil or hazardous substances unless the U.S. Environmental Protection Agency ("EPA") had been provided with the technical product data specified in the Annex and the agents were listed on EPA's Product Schedule. Annex X also specified procedures by which On-Scene Coordinators ("OSCs") could authorize the use of such products as well as the use of burning agents and mechanical control methods. The use of sinking agents was prohibited. On the basis of data submitted pursuant to Annex X, EPA prepared a schedule of 30 dispersants, surface collecting agents, and biological additives.

Section 105 of the Comprehensive Environmental Response, Compensation, and Liability Act of 1980 ("CERCLA"), 42 USC 9601 *et seq.*, required revision of the NCP to implement new authorities provided by CERCLA. Under Executive Order 12316, the President delegated responsibility for revising the NCP to EPA. In the July 16, 1982 revision of the NCP (47 FR 31180, codified at 40 CFR Part 300), EPA eliminated Annex X. In place of Annex X, EPA established a new Subpart H to implement the provisions of CWA Section 311(C)(2)(G).

As promulgated on July 16, 1982, Subpart H permitted OSCs to authorize the use of dispersants and other chemicals on oil discharges if the dispersants or other chemicals were on EPA's Product Schedule. The use of any product not on the Product Schedule required the authorization of the Administrator or the Administrator's designee. These dispersants and other chemicals were authorized only for use in responding to oil spills. The rule did not address the use of dispersants and other chemicals for response to hazardous substance spills.

As initially promulgated, Subpart H did not contain a requirement regarding data submissions for adding chemicals or biological agents to the Schedule. In the preamble to the revised NCP (47 FR 31201), EPA explained that it had deleted the data submission requirements pending a detailed review of the requirements and revision of the product testing procedures. The Agency noted that once this review was completed, it would propose a rule revising testing procedures and establishing a process for adding dispersants and other chemical agents to the NCP Product Schedule.

On December 21, 1983, EPA published a Notice of Proposed Rulemaking (NPRM) in the Federal Register (48 FR 56484) to amend Subpart H. The proposed rule specified the test data needed to add dispersants, surface collecting agents, and biological additives to the NCP Product Schedule. The proposed rule also prohibited the use of sinking agents, required state concurrence in authorizing the use of a product listed on the Schedule, and allowed OSCs to authorize unilaterally the use of any product when human life was endangered.

EPA received fifteen comment letters in response to the December 21, 1983 NPRM. Many of these letters contained numerous individual comments on the proposals made in the NPRM. In preparing today's final rule, EPA has carefully considered all of the comments received and has modified the proposed rule in several respects.

B. Organization of the Final Rule

Today's final rule amends 40 CFR Part 300 by revising Subpart H and adding Appendix C. Section 300.81 describes the purpose and applicability of Subpart H. Section 300.82 defines several key terms used in the regulation. Section 300.83 provides that EPA shall maintain a schedule of dispersants and other chemical or biological products that may be authorized for use on oil discharges, called the "NCP Product Schedule."

Section 300.84 sets forth the procedures by which an OSC may authorize the use of products listed on the NCP Product Schedule. The section specifically notes the circumstances under which concurrence of the affected states and the EPA representative to the Regional Response Team ("RRT") is necessary. Section 300.85 details the data that must be submitted to have a dispersant, surface collecting agent, or biological additive placed on the Schedule. Section 300.86 describes the procedures for placing a product on the Schedule. Section 300.86 also sets forth

requirements designed to avoid possible misrepresentation or misinterpretation of the placement of a product on the Schedule, including the wording of a disclaimer to be used in product advertisements or technical literature referring to placement on the Schedule.

Lastly, Appendix C details the methods and types of apparatus to be used in carrying out the revised standard dispersant effectiveness and toxicity tests. The Appendix also sets forth the format required for summary presentaton of product test data.

II. Summary of Changes From the Proposed Rule

The final rule promulgated today generally conforms to the rule as proposed on December 21, 1983. However, several changes to the proposed rule have been made on the basis of EPA's analysis of the comments received.

EPA has changed § 300.85(c) (8) and (9), which concern the data submission requirements for biological additives. Under the final rule, a person seeking to have a biological additive included on the NCP Product Schedule must submit data concerning the optimum pH, temperature, and salinity ranges of the additive as well as the maximum and minimum pH, temperature, and salinity levels above and below which the effectiveness of a biological additive is reduced to half its optimum level.

EPA has revised § 300.86(e) to require the use, in all technical literature or advertisements referring to the placement of a product on the NCP Product Schedule, of either a written disclaimer or EPA's written statement concerning the effect of listing a product on the Schedule. The text of the disclaimer is provided in § 300.86(e).

Finally, EPA has revised portions of Appendix C to describe certain steps of the effectiveness and toxicity testing procedures more clearly.

The reasons for these changes are discussed below. Any additional changes in the rule from the proposed rule are minor and editorial in nature.

III. Major Issues

A. NCP Product Schedule

Under today's rule, Subpart H is similar to Annex X in that it does not identify the waters or quantities in which listed dispersants and chemicals may safely be used. The wide variability in waters, weather conditions, organisms living in the waters, and types of oil that might be discharged requires a flexible approach. Thus, the waters and quantities in which a dispersant or chemical agent may safely be used are to be determined in each case by the OSC on the basis of all relevant circumstances. The data requirements for placement of a product on the NCP Product Schedule are designed to provide sufficient data for OSCs to judge whether and in what quantities a dispersant may safely be used to control a particular discharge. The standardized testing procedures set out in the rule are intended to ensure that OSCs have comparable data regarding the effectiveness and toxicity of different products.

Today's rule requires those seeking placement of a product on the NCP Product Schedule to submit technical data on the product to EPA. Data on both dispersants and surface collecting agents must include the results of the standard dispersant toxicity test set forth in Appendix C of today's rule. Data on dispersants also must include the results of the standard dispersant effectiveness test set forth in Appendix C. Products already on the product list that was prepared pursuant to Annex X of the previous NCP will be included on the new NCP Product Schedule. No additional data will be required at this time for these products. Existing data on these products are sufficient to permit OSCs to make informed decisions about product use. Commenters supported this preservation of the existing product list.

EPA will review submissions of technical product data to ensure that the data requirements set out in 40 CFR 300.85 are satisfied. When these requirements are satisfied, the product will be added to the NCP Product Schedule. Within 60 days of the receipt of the data, EPA will inform the submitter in writing whether the product will be listed on the Schedule.

Inclusion on the Schedule means only that the data submission requirements of 40 CFR 300.85 have been satisfied. The OSCs, often in conjunction with affected states and the EPA RRT representative, will use submitted data to decide whether application of a product on an oil discharge should be authorized in a particular case. In addition, the data may be used in planning performed by the RRT to prepare for response to oil discharges. Listing of a product on the NCP Product Schedule does *not* mean that the product is recommended or authorized for use on an oil discharge.

In addition, placement of a product on the NCP Product Schedule does not imply that EPA has confirmed the safety or effectiveness of the product or in any other way endorsed the product. To prevent possible misrepresentation or misinterpretation, all product labeling, literature, or advertisements that refer to placement on the Schedule must either reproduce the entire EPA letter announcing placement on the Schedule or include the disclaimer set forth in § 300.86(e). Failure to comply with this restriction may lead to removal of a product from the Schedule.

The December 21, 1983 NPRM did not allow for the use of an alternative disclaimer; it required that the EPA disclaimer letter be reproduced in its entirety in all product advertisements or technical literature that refer to the Schedule. A commenter suggested that printing a brief disclaimer would be sufficient to avoid misrepresentation or misinterpretation and would cost less then printing the entire EPA letter. EPA agrees that a proper alternative disclaimer would be adequate and has revised § 300.86(e) to provide for such a disclaimer. The disclaimer must be conspicuous and must read as follows:

Disclaimer

[PRODUCT NAME] is on the U.S. Environmental Protection Agency's NCP Product Schedule. This listing does *NOT* mean that EPA approves, recommends, licenses, certifies, or authorizes the use of [product name] on an oil discharge. This listing means *only* that data have been submitted to EPA as required by Subpart H of the National Contingency Plan, 40 CFR 300.85.

One commenter expressed concern over whether an OSC would be able to evaluate required test data in an adequate and timely fashion, suggesting that OSCs be provided with information complied in a more readily usable form. The NCP Product Schedule itself is not intended to include any information on the usage of dispersant chemicals. Although the Agency agrees in general with the concept of providing OSCs with the necessary data in summary table form, development of such a tabular matrix is not feasible at this time because of the numerous factors that an OSC must consider in determining whether to use a product on an oil discharge. For each product currently on the NCP Product Schedule, EPA has prepared a product data bulletin in the format outlined in Section 4.0 of Appendix C. This bulletin presents summary information pertaining to the conditions under which dispersants may be used in accordance with § 300.84.

The same commenter also suggested that dispersants should be clearly identified for use in salt waters or in fresh waters. As mentioned above, EPA has prepared a product data bulletin in the format outlined in Section 4.0 of Appendix C. This bulletin includes any information submitted with regard to the use of products in fresh or salt water.

The final rule published today requires those seeking placement of a product on the Schedule to submit product test data on water salinity. (See Appendix C, Section 4.0.) In addition, EPA notes that the data submitted by some manufacturers of dispersants indicate that several of the products currently listed on the Schedule perform satisfactorily in both salt and fresh waters.

One commenter suggested that § 300.85 (c)(8)(iii) and (c)(9)(vi), which originally required data only on the "[o]ptimum pH and temperature range" for the use of microbial cultures and enzyme additives, should be revised to read "[o]ptimum pH, temperature, and salinity ranges for use of the additive, and maximum and minimum pH, temperature, and salinity levels above or below which the effectiveness of the additive is reduced to half its optimum capacity."

EPA agrees that this information will assist the OSC in determining whether to use a biological additive listed on the Schedule and therefore has revised § 300.85 (c)(8)(iii) and (c)(9)(vi) accordingly.

B. EPA and State Concurrence.

Section 300.84 of today's rule provides that an OSC, with the concurrence of the EPA representative to the RRT and the concurrence of the state(s) with jurisdiction over the navigable waters (as defined in the CWA) polluted by the oil discharge, may authorize the use of dispersants, surface collecting agents, and biological additives listed on the NCP Product Schedule. The rule supplements the preexisting authorization procedure in two areas. First, if the OSC determines that the use of a dispersant, surface collecting agent, or biological additive is necessary to prevent or substantially reduce a hazard to human life, and there is insufficient time to obtain the needed concurrences, the OSC may unilaterally authorize the use of any product (including products not on the NCP Product Schedule). In such instances, the OSC must inform the EPA RRT representative and the affected states of the use of a product as soon as possible and must obtain their concurrence for the continued use of the product once the threat to human life has subsided. This provision eliminates delays in potentially life-threatening situations, such as spills of highly flammable petroleum products in harbors or near inhabited areas.

Second, the rule now explicitly encourages advance planning. The OSC is authorized to act without the concurrence of the EPA representative to the RRT and the affected states if these parties have previously approved a plan identifying the products that may be used under the particular circumstances faced by the OSC.

Neither Annex X of the previous NCP nor the superseded provisions of Subpart H required the OSC to obtain the concurrence of affected states to authorize product use; instead, they required only "consultation". States, however, have generally understood the term "consultation" to mean that their approval is required before a chemical agent is used on an oil discharge, and most OSCs have sought such approval. The requirement in today's rule for state concurrence was developed to bring the authorization provisions in Subpart H into conformity with OSC practices and state expectations.

EPA received several comments concerning the requirements for authorizing the use of chemical or biological agents. Commenters generally supported the authorization requirements and commended the clarification of the authorization procedure.

Several commenters requested that EPA more clearly identify the waters where state concurrence is required before the OSC may authorize the use of a dispersant, surface collecting agent, or biological additive in response to an oil discharge.

EPA has revised Subpart H to require, in most instances, that states concur with an OSC's decision to use dispersants or other products in the navigable waters subject to a state's jurisdiction. ("Navigable waters" is used in the same sense as it is defined in the CWA.) EPA believes that precise demarcation of state jurisdictional limits consistent with this language should be made during RRT advance planning pursuant to § 300.84(e), and the Agency encourages the inclusion of such assessments in these planning activities.

Comments concerning the need for concurrence varied. One commenter suggested that appropriate federal agencies be consulted (in addition to the relevant states and the EPA representative on the RRT) prior to the use of a chemical or biological agent on an oil discharge. Another commenter suggested that the use of surface collecting agents be allowed without the concurrence of the relevant states and the EPA RRT representatives. A third commenter recommended that the use of chemical or biological agents be allowed without concurrence where use of such products is necessary to prevent or reduce hazards to environmentally sensitive areas.

EPA does not believe that there is any reason to exempt surface collecting agents from the general requirement for state and RRT concurrence. EPA intends that RRT advance planning under § 300.84(e) be used to address the use of such agents and other chemicals in environmentally sensitive areas on a Regional basis. Specifically, the federal agencies on the RRT have the opportunity during the planning activities to identify environmentally sensitive areas within the Region where the use of particular chemical or biological agents should be restricted or encouraged. In addition, Section 300.84(e) provides that the RRT may anticipate and authorize under specific circumstances the use of specific chemical or biological agents on the NCP Schedule, e.g., the use of surface collecting agents on spills in confined inland waters.

Two commenters suggested that EPA strongly encourage or require the RRTs to develop detailed "Plans of Action" under § 300.84(e). It is EPA policy for RRTs to prepare these plans where appropriate. Many of the RRTs have completed or are near completion of such plans for responding to oil discharges. However, EPA is not requiring that such plans be developed, because it would be difficult and possibly infeasible to define the precise nature of such plans and in what situation they would be appropriate.

Although the Agency does not promote the uses of products on the NCP Product Schedule, neither does the Agency discourage their use under appropriate circumstances. The Agency strongly encourages the RRTs specifically to address the following in the regional contingency plans prepared under § 300.42 of the NCP: the use or restricted use of the dispersants, surface collecting agents, and biological additives on the NCP Product Schedule; the timing of the use of particular chemical or biological agents on the Schedule (e.g., seasonal restrictions); whether these products should be used alone or in conjunction with mechanical means for cleaning up oil discharges; the identification of personnel with knowledge of the proper application of products on the Schedule; and the determination of whether, and from whom, products on the Schedule are readily available.

One commenter suggested that § 300.84(c) be amended by deleting the parenthetical phrase "including products not on the NCP Product Schedule". This change would restrict OSCs to the use of chemical and biological agents on the NCP Product Schedule in all cases, including those involving life-threatening situations.

EPA does not agree with this recommendation. A life-threatening oil discharge (e.g., spills of highly flammable petroleum products in harbors or near inhabited areas) may occur at a location where chemical agents on the schedule are not immediately available. In such a case, the OSC must have the ability to use any product that, in his professional judgment, would effectively and expeditiously mitigate the threat to human life. The Agency believes that the protection of human life is a primary consideration in responding to an oil discharge. Therefore, § 300.84(c) of today's final regulation remains unchanged from the proposed rule.

C. Burning and Sinking Agents

Section 300.84 of today's final rule provides for authorization of the use of burning agents, as did Annex X of the previous NCP. Although burning agents will not be listed on the Schedule, OSCs may authorize their use on a case-by-case basis with the concurrence of the EPA RRT representative and the appropriate states. The OSC may authorize the use of burning agents without obtaining concurrence when their use is necessary to prevent or substantially reduce a hazard to human life.

One commenter suggested that EPA should require test data on burning agents similar to the data required for other chemical and biological agents. EPA disagrees, for several reasons. First, burning agents are relatively common inorganic chemicals that generally exhibit low toxicity. Data on toxicity and other relevant parameters are included in standard references that are already available to OSCs. To require test data on burning agents would be unnecessarily duplicative and burdensome for both industry and EPA. Second, state air pollution control programs generally regulate the use of burning agents. Finally, burning agents are used only rarely. Therefore, today's final rule includes § 300.84(b) as proposed, without change.

Sinking agents, however, may not be used. When applied to oil discharges, these agents sink floating oil to the bottom of the ocean or other body of water and increase the potential for adverse effects on benthic organisms that are vital to the food chain of the aquatic environment. Annex X of the previous NCP contained this same prohibition.

D. Toxicity and Effectiveness Tests

In the December 21, 1983 NPRM, EPA proposed revisions intended to simplify and reduce the cost of the effectiveness and toxicity testing procedures previously required under Annex X. The Agency is now making these proposed revisions final. The effectiveness test will require fewer replications, and the toxicity test will require fewer test species, while still assuring that the OSC will have adequate data available. These modifications reduce the cost of performing these tests by approximately 40 percent.

EPA has also proposed revisions to portions of Section 2.0 of Appendix C to clarify the dispersant effectiveness testing procedures and the methods and types of apparatus to be employed. In addition, the blank correction determination and calculation steps were clarified to facilitate performance of the effectiveness testing procedure. EPA will continue to study potential improvements in the test, and the Agency encourages manufacturers and suppliers to provide supplementary data on product performance under conditions not generated by the testing protocol.

Several commenters supported the revised testing and data requirements as a "definite improvement" over those required under Annex X; commenters also supported EPA's continuing commitment to study potential improvements in the testing protocol. Some commenters, however, expressed concern that the toxicity testing protocol was developed over ten years ago, and they encouraged updating these procedures. Two of these commenters distrusted the ability of the testing protocol to provide sufficient information regarding the effect of a product upon a wide range of environments and organisms.

The toxicity test set forth in Section 3.0 of Appendix C currently requires the use of *Fundulus* and *Artemia* as test species. EPA acknowledges that these species may not be present in all environments in which dispersants or surface collecting agents may be used in response to an oil discharge, but the Agency believes that the toxicity data provided by the test are useful to the OSC in judging whether to use a product on the NCP Product Schedule and are generally sufficient for that purpose. Requiring the performance of toxicity tests on all representative species that may be affected by use of a product on the Schedule would impose a severe burden on the manufacturer and would provide only marginally better data. EPA does not believe that it is appropriate or necessary to impose such a requirement at this time. Nonetheless, EPA will continue to evaluate improved testing procedures and, where appropriate, will attempt to revise the current toxicity testing requirements to reflect state-of-the-art developments. Moreover, the Agency strongly encourages manufacturers and suppliers to provide supplementary data on product toxicity under conditions and on species not involved in the testing protocol.[1]

EPA also strongly encourages each OSC to seek the assistance of the Scientific Support Coordinator (SSC) when responding to an oil discharge. In general, the SSC is the National Oceanic and Atmospheric Administration (NOAA) in the coastal areas and the Department of the Interior (DOI) in inland areas. The SSC may be able to provide additional environmental information that will help the OSC determine whether or not to use a particular chemical or biological agent on an oil discharge.

The commenters who were concerned about the toxicity testing protocol also suggested that the protocol include testing for sublethal or chronic effects. However, once applied, dispersants and other chemical agents rapidly dissipate into the water column, quickly reaching levels that cannot be detected. In most cases, therefore, no prolonged exposure to significant concentrations of dispersants or other agents will occur.

IV. Other Comments

One commenter suggested that appropriate federal agencies should have the opportunity to evaluate non-confidential information on the toxicity and composition of chemical and biological agents in advance of their use. As the commenter noted, the transfer of information is complicated by the fact that some of the information submitted by manufacturers may be protected through a claim of confidentiality under 40 CFR Part 2, Subpart B.

EPA agrees that providing appropriate federal and state agencies with information on products on the NCP Product Schedule may significantly enhance both advance planning activities and scientific support to the OSC. It is EPA policy for each OSC to make available to appropriate federal and state agencies relevant non-confidential information for each chemical and biological agent that may be used in response actions.

[1] The analytical methods provided in "Test Methods for Evaluating Solid Waste" (SW-846) should be used, where appropriate, for performing any analyses not specified in the rule. Copies of this document, numbered 055-002-81001-2, are available from the Superintendent of Documents, Government Printing Office, Washington, D.C. 20402, (202) 783-3238.

Product information claimed as confidential under § 300.86(c) of the final rule will be treated in accordance with the provisions of 40 CFR Part 2, Subpart B. The Agency will delete all specific product formulations that are confidential from documents potentially available to the public, and OSCs will receive such information separately from the technical product data bulletins. To assist the Agency, each submitter should present all information that is claimed confidential separately from non-confidential information and should clearly mark the former "Confidential Business Information" in accordance with 40 CFR 2.203. In addition, all parties who submitted data under Annex X will be encouraged to review their prior claims of confidentiality and determine whether such claims should remain in effect. If a manufacturer requests that specific information remain confidential, the Agency will continue to hold that information in accordance with the provisions of 40 CFR Part 2, Subpart B, and will distribute it to the OSCs separately from the technical product data bulletins.

EPA would like to emphasize that claims of confidentiality may restrict the dissemination of useful product information to states and other parties with a role in the authorization and use of products listed on the Schedule. To avoid such problems, submitters may wish to enter into agreements with particular states or agencies concerning the handling of confidential information.

One commenter recommended providing to the OSCs the name, address, and telephone number of the person who performed the product effectiveness and toxicity tests, as well as the name of the testing laboratory and the qualifications of its staff. Information of this nature is provided to EPA by product manufacturers with their original data submission, and it is kept on file. However, such information has limited value, because names, addresses, phone numbers, and company staffing frequently change. Therefore, EPA does not intend to include this type of information on the technical product data bulletins, which are already lengthy.

One commenter recommended that OSCs be required to prepare a technical report on each use of chemical or biological agents in response to an oil discharge. The commenter noted that such reports would then be available for use in making future decisions concerning such agents. EPA agrees that information on the actual applications of chemical and bioliogical agents to oil discharges is useful. The Agency believes, however, that § 300.56 of the NCP, which requires OSCs to prepare pollution reports, provides an adequate mechanism for communicating this information. EPA strongly encourages the inclusion of such information in these pollution reports. In addition, the Agency is currently developing a check list that OSCs may use in evaluating the application of particular products to oil discharges. Such field reports will provide valuable assistance to OSCs in responding to similar discharges.

One commenter stated that, because the OSC is responsible for the selection of a chemical agent for use in a given situation, the government must assume liability for any additional damages resulting from the OSC's erroneous use of a particular chemical agent. Because OSC or government liability for damages resulting from OSC decisions is an issue beyond the scope of this rulemaking, it is not addressed here.

V Summary of Supporting Analyses

A. Classification Under Executive Order 12291

Executive Order 12291 requires that proposed regulations be classified as "major" or "non-major" for purposes of review by the Office of Management and Budget. According to E.O. 12291, major rules are those likely to result in:

(1) An annual effect on the economy of $100 million or more;

(2) A major increase in costs or prices for consumers, individual industries, federal, state, or local government agencies, or geographic regions; or

(3) Significant adverse effects on competition, employment, investment, productivity, innovation, or the ability of United States-based enterprises to compete with foreign-based enterprises in domestic or export markets.

For several reasons, today's final rule is not likely to have any of these effects. First, the rule does not mandate or prohibit any private party conduct. Rather, the rule provides a procedure by which private parties may place dispersants and other agents on the NCP Product Schedule and make them available for authorized use on oil discharges. The choice of a manufacturer or supplier to submit the information required to place a product on the Schedule is entirely voluntary, and the application of the data requirements is conditioned on that choice. In addition, because today's rule provides a listing procedure for new products that has been unavailable since the substitution of Subpart H for Annex X, the rule may be expected to have a positive economic impact. The rule also simplifies and reduces the cost of the testing procedures previously provided under Annex X, thus benefiting those persons seeking to place new products on the Schedule. Because today's final rule is not a major regulation, no Regulatory Impact Analysis has been prepared.

This final rule was submitted to the Office of Management and Budget ("OMB") for review as required by Executive Order 12291. Any comments from OMB to EPA and EPA's responses to those comments are available for public inspection in Room S-321, U.S. Environmental Protection Agency, 401 M Street SW., Washington, D.C. 20460.

B. Paperwork Reduction Act

As noted above, today's final rule does not impose any regulatory burden on parties outside of EPA, including any reporting or information collection requirements. The rule also simplifies the standardized testing procedures. The Agency notes that, in practice, the voluntary submittal for which the rule provides will not impose a significant paperwork burden on manufacturers or suppliers of dispersants and other agents, because contract laboratories frequently handle the preparation of the test data. Moreover, given the importance of comprehensive information to the selection of a product for use on an oil discharge, any information submitted in addition to the minimum required to place a product on the Schedule may be expected to enhance the competitive position of the product.

The conditional information collection requirements in this final rule have been submitted for approval to OMB in accordance with the Paperwork Reduction Act of 1980, 44 U.S.C. 53501 *et seq.* This final rule package responds to OMB and public comments on those requirements.

C. Certification Why a Regulatory Flexibility Analysis Is Not Necessary

The Regulatory Flexibility Act of 1980 requires that a Regulatory Flexibility Analysis be performed for all rules that are likely to have "significant impact on a substantial number of small entities." EPA certifies that this regulation will not have a significant impact on a substantial number of small entities. The Agency believes that small businesses will constitute only a small percentage of the total number of businesses seeking to include their products on the NCP Product Schedule. The Agency also believes that the cost of seeking to include a product on the Schedule is negligible and will not adversely affect

the financial structures of small businesses.

Dated: June 29, 1984.

William D. Ruckelshaus,

Administrator.

List of Subjects In 40 CFR Part 300

Chemicals, Hazardous materials, Hazardous substances, Intergovernmental relations, Natural resources, Occupational Safety and Health, Oil pollution, Reporting and recordkeeping requirements, Superfund, Waste treatment and disposal, Water pollution control, Water supply.

PART 300—[AMENDED]

For the reasons set out in the preamble, Part 300, Subpart H of Title 40, *Code of Federal Regulations*, is amended as set forth below.

40 CFR Part 300 is amended as follows:

1. The authority citation for Part 300 reads as follows:

Authority: Sec. 105, Pub. L. 96-510, 94 Stat. 2764, 42 U.S.C. 9605; sec. 311(c)(2), Pub. L. 92-500, as amended, 86 Stat. 865, 33 U.S.C. 1321(c)(2); E.O. 12316, 46 FR 42237; E.O. 11735, 38 FR 21243.

2. In Part 300, § 300.81 is revised and §§ 300.82, 300.83, 300.84, 300.85, 300.86, and Appendix C are added to read as follows:

Subpart H—Use of Dispersants and Other Chemicals

Sec.
300.81 General.
300.82 Definitions.
300.83 NCP product schedule.
300.84 Authorization of use.
300.85 Data requirements.
300.86 Addition of products to schedule.

Subpart H—Use of Dispersants and Other Chemicals

§ 300.81 General.

(a) Section 311(c)(2)(G) of the Clean Water Act requires that EPA prepare a schedule of dispersants and other chemicals, if any, that may be used in carrying out the plan. This subpart makes provisions for such a schedule.

(b) This subpart applies to the navigable waters of the United States and adjoining shorelines, the waters of the contiguous zone, and the high seas beyond the contiguous zone in connection with activities under the Outer Continental Shelf Lands Act, activities under the Deep Water Port Act of 1974, or activities that may affect natural resources belonging to, appertaining to, or under the exclusive management authority of the United States (including resources under the Fishery Conservation and Management Act of 1976).

(c) This subpart applies to the use of any chemical agents or other additives as hereinafter defined that may be used to remove or control oil discharges.

§ 300.82 Definitions.

For the purposes of this subpart:

(a) *Chemical agents*, in general, are those elements, compounds, or mixtures that coagulate, disperse, dissolve, emulsify, foam, neutralize, precipitate, reduce, solubilize, oxidize, concentrate, congeal, entrap, fix, make the pollutant mass more rigid or viscous, or otherwise facilitate the mitigation of deleterious effects or removal of the pollutant from the water.

(b) *Dispersants* are those chemical agents that emulsify, disperse, or solubilize oil into the water column or promote the surface spreading of oil slicks to facilitate dispersal of the oil into the water column.

(c) *Surface collecting agents* are those chemical agents that form a surface film to control the layer thickness of oil.

(b) *Biological additives* are microbiological cultures, enzymes, or nutrient additives that are deliberately introduced into an oil discharge for the specific purpose of encouraging biodegradation to mitigate the effects of the discharge.

(e) *Burning agents* are those additives that, through physical or chemical means, improve the combustibility of the materials to which they are applied.

(f) *Sinking agents* are those additives applied to oil discharges to sink floating pollutants below the water surface.

(g) *Navigable water* means the water of the United States, including the territorial seas. "Territorial seas" means the belt of the seas measured from the line of ordinary low water along that portion of the coast which is in direct contact with the open sea and the line marking the seaward limit of inland waters, and extending seaward a distance of three miles.

§ 300.83 NCP Product Schedule.

(a) *Oil Discharges.* (1) EPA shall maintain a schedule of dispersants and other chemical or biological products that may be authorized for use on oil discharges in accordance with the procedures set forth in § 300.84, below. This schedule, called the NCP Product Schedule, may be obtained from the Emergency Response Division, U.S. Environmental Protection Agency, Washington, D.C. 20460. Phone (202) 382-2196.

(2) Products may be added to the NCP Product Schedule by the process specified in § 300.86.

(b) *Hazardous substance Releases.* [Reserved]

§ 300.84 Authorization of use.

(a) The OSC, with the concurrence of the EPA representative to the RRT and the concurrence of the States with jurisdiction over the navigable waters polluted by the oil discharge, may authorize the use of dispersants, surface collecting agents, and biological additives on the oil discharge, provided that the dispersants, surface collecting agents, or additives are on the NCP Product Schedule.

(b) The OSC, with the concurrence of the EPA representative to the RRT and the concurrence of the States with jurisdiction over the navigable waters polluted by the oil discharge, may authorize the use of burning agents on a case-by-case basis.

(c) The OSC may authorize the use of any dispersant, surface collecting agent, other chemical agent, burning agent, or biological additive (including products not on the NCP Product Schedule) without obtaining the concurrence of the EPA representative to the RRT or the States with jurisdiction over the navigable waters polluted by the oil discharge, when, in the judgment of the OSC, the use of the product is necessary to prevent or substantially reduce a hazard to human life. The OSC is to inform the EPA RRT representative and the affected States of the use of a product as soon as possible and, pursuant to the provisions in paragraph (a) of this section, obtain their concurrence for its continued use once the threat to human life has subsided.

(d) Sinking agents shall not be authorized for application to oil discharges.

(e) RRTs should consider, as part of their planning activities, the appropriateness of using the dispersants, surface collecting agents, or biological additives listed on the NCP Product Schedule, and the appropriateness of using burning agents. Regional contingency plans should address the use of such products in specific contexts. If the RRT and the States with jurisdiction over the waters of the area to which a plan applies approve in advance the use of certain products as described in the plan, the OSC may authorize the use of the products without obtaining the concurrence of the EPA representative to the RRT or of the States.

§ 300.85 Data requirements.

(a) *Dispersants.* (1) Name, brand, or trademark, if any, under which the dispersant is sold.

(2) Name, address, and telephone number of the manufacturer, importer, or vendor.

(3) Name, address, and telephone number of primary distributors or sales outlets.

(4) Special handling and worker precautions for storage and field application. Maximum and minimum storage temperatures, to include optimum ranges as well as temperatures that will cause phase separations, chemical changes, or other alterations to the effectiveness of the product.

(5) Shelf life.

(6) Recommended application procedures, concentrations, and conditions for use depending upon water salinity, water temperature, types and ages of the pollutants, and any other application restrictions.

(7) Dispersant Toxicity—Use standard toxicity test methods described in Appendix C.

(8) Effectiveness—Use standard effectiveness test methods described in Appendix C. Manufacturers are also encouraged to provide data on product performance under conditions other than those captured by these tests.

(9) Flash Point—Select appropriate method from the following: ASTM—D 56-77; ASTM—D 92-78; ASTM—D 93-77; ASTM—D 1310-72; ASTM—D 3278-78.[1]

(10) Pour Point—Use ASTM—D 97-66.[1]

(11) Viscosity—Use ASTM—D 445-74.[1]

(12) Specific Gravity—Use ASTM—D 1298-67 [1]

(13) pH—Use ASTM—D 1293-78.[1]

(14) Dispersing Agent Components. Itemize by chemical name and percentage by weight each component of the total formulation. The percentages will include maximum, minimum, and average weights in order to reflect quality control variations in manufacture or formulation. Identify at least the following major components: surface active agents; solvents; additives.

(15) Heavy Metals, Cyanide, and Chlorinated Hydrocarbons. Using standard test procedures, state the concentrations or upper limits of the following materials:

(i) Arsenic, cadmium, chromium, copper, lead, mercury, nickel, zinc, plus any other metals that may be reasonably expected to be in the sample. Atomic absorption methods should be used and the detailed analytical methods and sample preparation shall be fully described.

(ii) Cyanide. Standard colorimetric procedures should be used.

(iii) Chlorinated hydrocarbons. Gas chromatography should be used and the detailed analytical methods and sample preparation shall be fully described.

(16) The technical product data submission shall include the identity of the laboratory that performed the required tests, the qualifications of the laboratory staff (including professional biographical information for individuals responsible for any tests), and laboratory experience with similar tests. Laboratories performing toxicity tests for dispersant toxicity must demonstrate previous toxicity test experience in order for their results to be accepted. It is the responsibility of the submitter to select competent anaytical laboratories based on the guidelines contained herein. EPA reserves the right to refuse to accept a submission of technical product data because of lack of qualification of the analytical laboratory, significant variance between submitted data and any laboratory confirmation performed by EPA, or other circumstances that would result in inadequate or inaccurate information on the dispersing agent.

(b) *Surface Collecting Agents.* (1) Name, brand, or trademark, if any, under which the dispersant is sold.

(2) Name, address, and telephone number of the manufacturer, importer, or vendor.

(3) Name, address, and telephone number of primary distributors or sales outlets.

(4) Special handling and worker precautions for storage and field application. Maximum and minimum storage temperatures, to include optimum ranges as well as temperatures that will cause phase separations, chemical changes, or other alterations to the effectiveness of the product.

(5) Shelf life.

(6) Recommended application procedures, concentrations, and conditions for use depending upon water salinity, water temperature, types and ages of the pollutants, and any other application restrictions.

(7) Toxicity—Use standard toxicity test methods described in Appendix C.

(8) Flash Point—Select appropriate method from the following: ASTM—D 56-77; ASTM—D 92-78; ASTM—D 93-77; ASTM—D 1310-72; ASTM—D 3278-78.[1]

(9) Pour Point—Use ASTM—D 97-66.[1]

(10) Viscosity—Use ASTM—D 445-74.[1]

(11) Specific Gravity—Use ASTM—D 1298-67 [1]

(12) pH—Use ASTM—D 1298-78.[1]

(13) Test to Distinguish Between Surface Collection Agents and Other Chemical Agents.

(i) Method Summary—Five (5) milliliters of the chemical under test are mixed with ninety-five (95) milliliters of distilled water and allowed to stand undisturbed for one hour. Then the volume of the upper phase is determined to the nearest one (1) milliliter.

(ii) Apparatus.

(A) Mixing Cylinder: 100 milliliter subdivisions and fitted with a glass stopper.

(B) Pipettes: Volumetric pipette, 5.0 milliliter.

(C) Timers.

(iii) Procedure—Add 95 milliliters of distilled water at 22 °C+3 °C to a 100 milliliter mixing cylinder. To the surface of the water in the mixing cylinder, add 5.0 milliliters of the chemical under test. Insert the stopper and invert the cylinder five (5) times in 10 seconds. Set upright for one (1) hour at 22 °C+3 °C and then measure the chemical layer at the surface of the water. The major portions of the chemical added (75 percent) should be at the water surface as a separate and easily distinguished layer.

(14) Surface Collecting Agent Components. Itemize by chemical name and percentage by weight each component of the total formulation. The percentages should include maximum, minimum, and average weights in order to reflect quality control variations in manufacture or formulation. Identify at least the following major components: surface active agents; solvents; additives.

(15) Heavy Metals, Cyanide, and Chlorinated Hydrocarbons. Follow specifications in § 300.85(a)(15).

(16) Analytical Laboratory Requirements for Technical Product Data. Follow specifications in § 300.85(a)(16).

(c) *Biological Additives.* (1) Name, brand, or trademark, if any, under which the dispersant is sold.

(2) Name, address, and telephone number of the manufacturer, importer, or vendor.

(3) Name, address, and telephone number of primary distributors or sales outlets.

(4) Special handling and worker precautions for storage and field application. Maximum and minimum storage temperatures.

[1] *1981 Annual Book of ASTM Standards.* American Society for Testing and Materials, 1916 Race Street, Philadelphia, Pennsylvania 19103.

[1] *1981 Annual Book of ASTM Standards.* American Society for Testing and Materials, 1916 Race Street, Philadelphia, Pennsylvania 19103.

(5) Shelf life.

(6) Recommended application procedures, concentrations, and conditions for use depending upon water salinity, water temperature, types and ages of the pollutants, and any other application restrictions.

(7) Statements and supporting data on the expected effectiveness of the additive, including degradation rates, the test conditions, and data on effectiveness.

(8) For microbiological cultures furnish the following information:

(i) Listing of all microorganisms by species.

(ii) Percentage of each species in the composition of the additive.

(iii) Optimum pH, temperature, and salinity ranges for use of the additive, and maximum and minimum pH, temperature, and salinity levels above or below which the effectiveness of the additive is reduced to half its optimum capacity.

(iv) Special nutrient requirements, if any.

(v) Separate listing of the following, and test methods for such determinations: Salmonella, fecal coliform, Shigella, Staphylococcus Coagulase positive, and Beta Hemolytic Streptococci.

(9) For enzyme additives furnish the following information:

(i) Enzyme name(s).

(ii) International Union of Biochemistry (I.U.B.) number(s).

(iii) Source of the enzyme.

(iv) Units.

(v) Specific Activity.

(vi) Optimum pH, temperature, and salinity ranges for use of the additive, and maximum and minimum pH, temperature, and salinity levels above or below which the effectiveness of the additive is reduced to half its optimum capacity.

(vii) Enzyme shelf life.

(viii) Enzyme optimum storage conditions.

(10) Laboratory Requirements for Technical Product Data. Follow specifications in § 300.85(a)(16).

(d) *Burning Agents.* EPA does not require technical product data submissions for burning agents and does not include burning agents on the NCP Product Schedule.

§ 300.86 Addition of products to schedule.

(a) To add a dispersant, surface collecting agent, or biological additive to the NCP Product Schedule, the technical product data specified in § 300.85 must be submitted to the Emergency Response Division, U.S. Environmental Protection Agency, 401 M Street, SW., Washington, D.C. 20460. If EPA determines that the data submitted meet the relevant requirements, EPA will add the product to the schedule.

(b) EPA will inform the submitter in writing, within 60 days of the receipt of technical product data, of its decision on adding the product to the schedule.

(c) The submitter may assert that certain information in technical product data submissions is confidential business information. EPA will handle such claims pursuant to the provisions in 40 CFR Part 2, Subpart B. Such information must be submitted separately from non-confidential information, clearly identified, and clearly marked "Confidential Business Information." If the submitter fails to make such a claim at the time of submittal, EPA may make the information available to the public without further notice.

(d) The submitter must notify EPA of any changes in the composition or formulation of the dispersant, surface collecting agent, or biological additive. On the basis of this data, EPA may require retesting of the product if the change is likely to affect the effectiveness or toxicity of the product.

(e) The listing of a product on the NCP Product Schedule does not constitute approval of the product. To avoid possible misinterpretation or misrepresentation, any label, advertisement, or technical literature that refers to the placement of the product on the NCP schedule must either reproduce in its entirety EPA's written statement, referred to in Subsection (b), that the product has been listed on the schedule, or include the following disclaimer, which must be conspicuous and must be fully reproduced as follows:

Disclaimer

[PRODUCT NAME] is on the U.S. Environmental Protection Agency's NCP Product Schedule. This listing does *NOT* mean that EPA approves, recommends, licenses, certifies, or authorizes the use of [product name] on an oil discharge. This listing means *only* that data have been submitted to EPA as required by Subpart H of the National Contingency Plan, § 300.85.

Failure to comply with these restrictions or any other improper attempt to demonstrate EPA approval of the product shall constitute grounds for removing the product from the NCP Product Schedule.

* * * * *

Appendix C to Part 300—Revised Standard Dispersant Effectiveness and Toxicity Tests.

Table of Contents

1.0 Introduction
2.0 Revised Standard Dispersant Effectiveness Test
3.0 Revised Standard Dispersant Toxicity Test
4.0 Summary Technical Product Test Data Format

References

List of Illustrations

Figure Number

1 Test Tank
2 Suggested Hosing System
3 Schematic Diagram of Automatic Dispensing Pipette System

List of Tables

Table Number

1 Synthetic Seawater (Effectiveness Test)
2 Test Oil Characteristics: No. 6 Fuel Oil
3 Preparation of Standards for Calibration
4 Required Dispersant Effectiveness Tests Results
5 Synthetic Seawater (Toxicity Test)
6 Test Oil Characteristics: No. 2 Fuel Oil

1.0 Introduction

1.1 *Scope and Application.* These methods apply to "dispersants," involving Subpart H (Use of Dispersants and Other Chemicals) in 40 CFR Part 300 (National Oil and Hazardous Substances Pollution Contingency Plan). They are revisions to the EPA's Standard Dispersant Effectiveness and Toxicity Tests (1). Note that the toxicity test is also used for collecting agents and other chemicals.

1.2 *Definition.* Dispersants are defined as those chemical agents that emulsify, disperse, or solubilized oil into the water column or act to further the surface spreading of oil slicks in order to facilitate dispersal of oil into the water column.

2.0 Revised Standard Dispersant Effectiveness Test

2.1 *Summary of Method.* The test oil (100 ml) is applied to the surface of synthetic seawater contained in a cylindrical tank. The dispersant (3, 5, or 25 ml) is applied to the oil in a fine stream, and 3.0 minutes are allowed for the dispersant to contact the oil. The oil, dispersant, and seawater are mixed by hosing with a pressurized water stream for 1.0 minute. The contents of the tank are recirculated by a pump, and samples are withdrawn from the recirculation system after 10 minutes and after 2 hours of recirculation. The amount of oil dispersed is determined by measuring the absorbance of visible light after extraction of the dispersed oil with chloroform. Each test is repeated three times.

2.2 *Apparatus. Test Tank.* Construct the cylindrical test tank, 24 inches (600 mm) inside diameter by 28 inches (710 mm) high, of 16-gauge stainless steel. Install, as shown in Figure 1, the associated piping, valve, and pump for recirculation of dispersed oil and for sample collection.

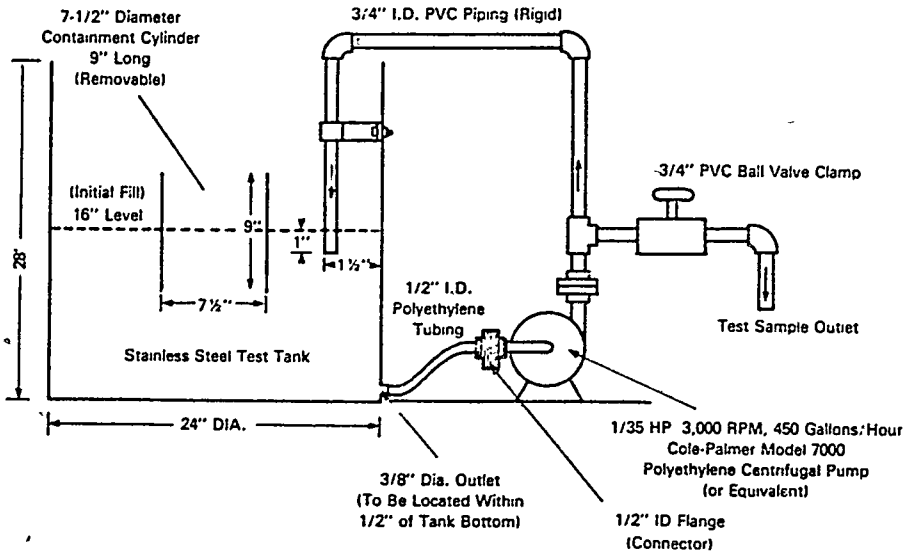

Figure 1. Test Tank

Oil Containment Cylinder. Use a 16-gauge stainless steel containment cylinder 7.5 inches (190 mm) in diameter and 9 inches (229 mm) long to contain the oil while the oil contacts the dispersant. Suspend the cylinder vertically in the center of the test tank with its midpoint 16 inches (406 mm) above the base of the tank. The design should be such that the cylinder can be removed from the tank in less than 10 seconds.

Hosing System. Provide a pressurized hosing system suitable for delivering synthetic seawater to the oil/dispersant mixture in the test tank. A suggested hosing system is shown in Figure 2. Deliver hosing water through a hose with a ½-inch (12.7 mm) inside diameter, which is connected to a shut-off nozzle with a discharge tip approximately with a 3/16-inch (4.8-mm) inside diameter [Akron Brass Company, Style 111 shutoff valve with Style 558, 3/16-inch tip, or equivalent].

The hosing system must be adjusted to deliver 15.1±0.8 liters/min at 140 kPa (4.0±0.2 gpm at 20 psig). Measure the flow by hosing synthetic seawater at 23±1°C into a calibrated container for the predetermined time. Set the proper flow rate by adjusting the pressure in the pressurized tank or a suitable valve in the hose line. The delivery pressure should be determined by means of a pressure gauge in the line immediately before the nozzle.

Corrosion buildup within the nozzle may change hosing pressure and alter test results. To prevent this, remove and flush the nozzle with fresh water at the end of each day's tests.

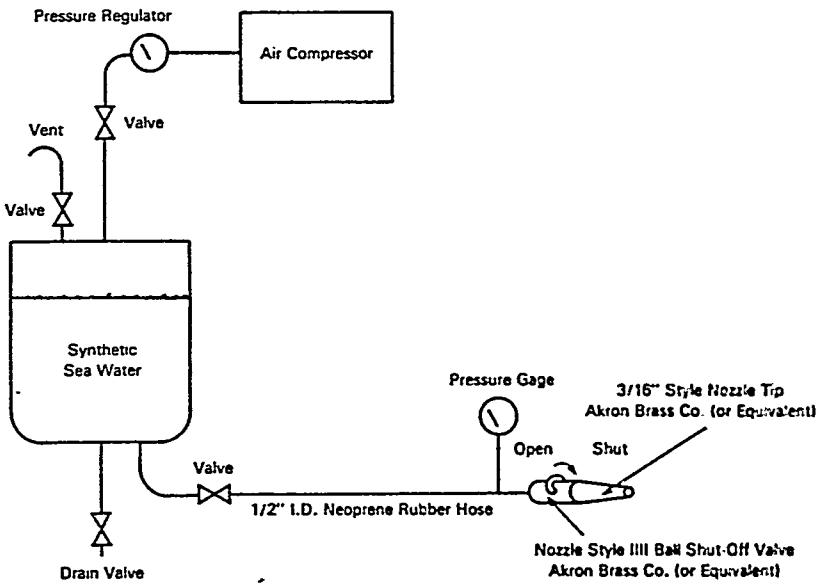

Figure 2. Suggested Hosing System

Spectrophotometer. Use a spectrophotometer suitable for measurement at 620 nanometers to determine photochemically the oil concentration of the oil/chloroform mixture. A Bausch and Lomb Spectronic 20 spectrophotometer (or equivalent) is acceptable for this purpose.

Filter Paper. Use a filter paper suitable for filtering the oil/chloroform extract. Whatman No. 1 filter paper (or equivalent) is acceptable for this purpose.

Glassware. Glassware should consist of 5-, 10-, 25-, 100- and 500-ml graduated cylinders; two 1,000-ml separatory funnels with Teflon stopcocks; 10-, 100-, and 1,000-ml volumetric flasks and two 250-ml Erlenmeyer flasks.

2.3 *Reagents. Synthetic Seawater.* Prepare a batch of concentrated synthetic seawater using the components listed in Table 1, which are added to 379 liters (100 gal) of tap water having a hardness less than 50 mg/liter.

Chloroform Reagent Grade.

Sodium Sulfate, Anhydrous Reagent Grade.

Oils. Test the dispersant with 100 ml of No. 6 fuel oil that has the characteristics given in Table 2.

2.4 *Pretest Preparation. Calibration of Spectrophotometer.* Prepare a stock solution by adding 3.50 g of the test oil to a 1,000-ml volumetric flask. Dissolve the oil in about 900 ml of chloroform, then dilute to the mark with choloroform. The resulting concentration of test oil is 3,500 mg/liter.

Prepare standard solutions of No. 6 fuel oil by pipetting 5, 10, 25, and 50 ml of the test oil stock solution into 10-ml volumetric flasks. Dilute each flask to the mark with chloroform. The concentration of test oil in each flask is given in Table 3:

TABLE 1.—SYNTHETIC SEAWATER (EFFECTIVENESS TEST)

Salt[a]	Composition	
	Concentrate[b] (kg/379 liter)	Diluted seawater (g/liter)
NaCl	20.25	17.10
$MgCl_2 \cdot 6H_2O$	9.17	7.44
Na_2SO_4	3.38	2.85
$CaCl_2$	0.952	0.802
KCl	0.573	0.483
$NaHCO_3$	0.166	0.140

[a] If any salt other than those listed above is used, allowance must be made for water of crystallization.
[b] Concentrate is prepared by dissolving the indicated amount of salt in 379 liters (100 gal.) of tap water.

2.5 *Dispersant Effectiveness Test Procedure.* The dispersant effectiveness test procedures are as follows in steps 1–16:

1. Add 38±1 liters (10±0.25 gal) of the seawater concentrate to the test tank. Dilute the concentrate to a depth of 16±0.25 inches (410±5 mm) with hot and cold water in the proper amounts to bring the temperature of the diluted seawater to 23±1° C. Adjust the pH of the seawater to 8.0±0.1 with concentrated HC1 or NaOH. The salinity of the water should be 25.00±0.15 parts per thousand (ppt).

2. Insert the oil containment cylinder into the test tank. Position the cylinder in the center of the tank with its midpoint 16±0.25 inches (410±5 mm) above the base of the tank.

TABLE 2.—TEST OIL CHARACTERISTICS: NO. 6 FUEL OIL

Characteristics	No. 6 fuel oil	
	Minimum	Maximum
Gravity (°API)		16.9
Viscosity—Furol at 122°F (SFS)	101	200
Flash Point (°F)	160	
Pour Point (°F)		35
Sulfur (wt %)		2.73
Carbon residue (wt %)		12.3
Water (vol %)		0.20
Sediment (wt %)		0.10
Ash (wt %)		0.10
Asphaltenes (wt %)		10.0
Neutralization No		2.5

TABLE 3.—PREPARATION OF STANDARDS FOR CALIBRATION

Volume of stock solution used (ml)	Concentration of test oil (mg/liter)
5	175
10	350
25	875
50	1,750
100 (neat)	3,500

Determine the absorbance of the stock solution and the diluted aliquots at a wavelength of 620 nanometers. If a Bausch and Lomb Spectronic 20 spectrophotometer is used, the ½-inch (12.7-mm) cell is recommended. Plot the calibration curve for the test oil as mg/liter of test oil versus absorbance.

Measurement of Specific Gravity of the Test Oils and Dispersant. Equilibrate samples of the test oil and dispersant at 23±1 ° C

Weigh two dry 10-ml volumetric flasks on a balance capable of weighing to ±1 mg or better. Add enough test oil to one flask and enough dispersant to the second flask to fill them to the mark. Reweigh each flask. The density of the oil and dispersant is:

$$\text{Density (g/ml)} = \frac{\text{Weight of test oil or dispersant (g)}}{\text{volume of the flask (ml)}} \quad (1)$$

3. Select one of the following graduated cylinders, a 5-, 10-, or 25-ml graduated cylinder, as appropriate for addition of the dispersant and a 100-ml graduated cylinder for addition of the test oil.

4. Fill the 100-ml graduated cylinder with 100 ml of the test oil. Drain the Cylinder for 3.0 minutes. Weigh the drained cylinder and record the weight. Calculate the weight of 100 ml of test oil [weight (g) = density (g/ml) × volume (ml)] and add this amount of test oil to the drained cylinder. Record the weight of the cylinder and oil.

Note.—The precision of the effectiveness test is increased substantially if exactly the same weight of test oil or dispersant is added for each test. The purpose of Step 4 is to determine the amount of test oil or dispersant

that will be left in the graduated cylinder after the addition.

5. Slowly and gently add the 100 ml of the test oil from the graduated cylinder directly onto the water surface within the center of the oil containment cylinder. Move the graduated cylinder in a circular motion to distribute the oil uniformly over the surface. Be careful that oil is not lost below the containment cylinder and that oil does not splash, drip onto, or contact the containment cylinder wall above the waterline during application.

Allow the oil to drain from the graduated cylinder for 3.0 minutes.

Weigh the drained graduated cylinder. Calculate the weight of oil actually added to the test tank. Check the weight to be sure that 100.0 ± 0.5 ml of test oil was added to the test tank.

6. Fill either the 5-, 10-, or 25-ml graduated cylinder with 3, 10, or 25 ml of dispersant, respectively. Drain it for 3.0 minutes and weigh the drained cylinder. Calculate the weight of 3, 10, or 25 ml of dispersant required [weight (g) = density (g/ml) × volume (ml)] and add this amount of dispersant to the drained cylinder. Record the weight of the cylinder and dispersant.

7. From the graduated cylinder gently add the dispersant at 23±1°C onto the oil surface within the containment cylinder. Move the graduated cylinder in a circular motion to distribute the dispersant uniformly over the surface. Carefully apply the dispersant onto the oil surface only and not through the oil surface or onto the containment cylinder walls. Allow the dispersant to drain from the graduated cylinder for 3.0 minutes.

Weigh the drained graduated cylinder. Calculate the weight of dispersant added to the test tank. Check the weight to be sure that the correct volume of dispersant, ± 3 percent, was added to the test tank.

8. Activate the hosing system, adjust nozzle pressure to 140 kPa, and apply a stream of synthetic seawater at 23±1°C to the oil/dispersant mixture within the containment cylinder. Immediately lift the cylinder all the way out above the water surface, and simultaneously hose off any oil adhering to the cylinder's inner surface. Remove the cylinder completely and continue to hose and agitate the oil/dispersant mixture for a total hosing period of 1.0 minute. The flow rate of hosing nozzle must be 15.1±0.8 liters/min at 140 kPa (4.0±0.2 gpm at 20 psig).

Note.—(1) Removing the containment cylinder must take no longer than 10 seconds. (2) To hose the oil/dispersant mixture, hold the discharge tip of the nozzle approximately level with the top edge of the test tank and pointed vertically downward. Move the nozzle rapidly in a random manner from side to side, backwards and forwards, and around the inner wall of the tank, as necessary, to facilitate continuous hosing and agitation of the entire oil/dispersant surface.

9. Immediately after hosing, start the recirculation pump and continue recirculation for 2.0 hours.

10. After 10.0 minutes of recirculation, withdraw a 500-ml sample into a 500-ml graduated cylinder and discard. Immediately collect another 500-ml sample for determining "initial dispersion."

11. After 2.0 hours of recirculation, withdraw a 500-ml sample into a 500-ml graduated cylinder and discard. Immediately collect another 500-ml sample for determining "final dispersion."

12. Transfer the 500-ml sample to a 1,000-ml separatory funnel. Add 25 ml of chloroform to the separatory funnel, stopper the funnel, and shake vigorously for 50 strokes. After shaking, place the funnel in a rack, vent, and allow a setting time of 2 to 3 minutes.

After the settling period, lift the funnel from the rack and gently invert it several times. While holding the funnel, allow the contents to settle and then gently swirl with a circular motion to afford additional settling of the oil/chloroform mixture. Transfer the oil/chloroform mixture to a 250-ml Erlenmeyer flask that contains anhydrous Na_2SO_4 for drying the extract.

Repeat the extractions using a total of at least three 25-ml portions of chloroform.

After the oil extraction is complete, filter the combined extracts from the Erlenmeyer flask through dry filter paper into an appropriate volumetric flask (100 ml, 250 ml, or 500 ml depending on the amount of chloroform used to complete the extraction).

Rinse the Na_2SO_4 and filter paper with small portions of chloroform to remove entrained oil. After removing, fill the volumetric flask to the mark with chloroform, invert and thoroughly mix contents.

13. Spectrophotometrically determine the absorbance of the extract using the identical wavelength and cell used to calibrate the spectrophotometer. From the calibration curve, determine the concentration of oil in the chloroform.

Compute the concentration of oil in the sample as follows:

$$C_{do} = \frac{C_1 \times (\text{volume of sample})}{(\text{volume of chloroform used})} \quad (2)$$

where:

C_{do} is the concentration of dispersed oil in the sample and

C_1 is the measured concentration of oil in the chloroform extract.

Note that the standard sample volume is 500 ml and the volume of chloroform used should also be expressed in ml.

Repeat Steps 1 through 13 at least three times for each of the three required volumes of dispersant.

2.6 *Blank Correction Determination.*

14. Clean the test tank and prepare the synthetic seawater at 23±1°C as described in Step 1. Do not install the containment cylinder and do not use any test oil. Add 25 ml of the dispersant to the tank as described in Steps 6 and 7 and continue the test procedure as described in Steps 8 through 12.

15. Spectrophotometrically determine the absorbance of the extract using the identical wavelength and cell used to calibrate the spectrophotometer. From the calibration curve, determine the corresponding concentration of oil in the chloroform. Compute the dispersant blank correction for 25 ml of dispersant as follows:

$$D = \frac{C_2 \times (\text{volume of sample})}{(\text{volume of chloroform used})} \quad (3)$$

where:

D is the blank correction for 25 ml of dispersant, and

C_2' is the measured concentration of oil in the chloroform extract:

Note that the standard sample volume is 500 ml and the volume of chloroform used should also be expressed in ml. The Dispersant Blank Correction (DBC) for other volumes of dispersant used in a test may then be computed as:

$$DBC = \frac{D \times (\text{volume in ml of dispersants used})}{25 \text{ ml}} \quad (4)$$

16. Clean the test tank and prepare the synthetic seawater at 23±1°C as described in Step 1. Do not install the containment cylinder. Prepare 100 ml of test oil as described in Steps 4 and 5, and add it to the test tank. Continue the test procedure as described in Steps 8 through 13. The Oil Blank Correction (OBC) is:

$$OBC = \frac{C_1 \times (\text{volume of sample})}{(\text{volume of chloroform used})} \quad (5)$$

2.7 *Calcualtions.* The concentrations of test oil equivalent to 100 percent dispersion is:

$$C_{100} = \frac{\text{(weight of test oil)}}{\text{(133.6 liter synthetic seawater)}} \quad (6)$$

The weight of the test oil should be expressed in milligrams, so that resulting C_{100} will be in mg/liter.

The percent of oil dispersed is then:

$$\text{Percent dispersed} = \frac{(C_{do} - OBC - DBC)}{C_{100}} \times 100\% \quad (7)$$

2.8 *Report of the Effectiveness Test Results.* Based on 100 ml of oil, determine the percent dispersion of the test oil caused by 3, 10, and 25 ml of dispersant: (a) after 10 minutes recirculation ("initial dispersion") and (b) after 2 hours recirculation ("final dispersion").

Determine the mean of at least three replicate tests for each of the three dispersant dosages. If the percent dispersion value found (after the 10-minute recirculation period only) for any of the three replicate tests varies from the mean value by more than ±8 percent, discard that result and run another replicate.

For each test oil, using percent dispersion as the ordinate and dispersant dosage (ml) as the abscissa, plot two curves on one chart, one for "initial dispersion" and the other for "final dispersion." Draw the graphs by plotting mean percent dispersion values for each of the dispersant dosages of 3, 10, and 25 ml and connecting the corresponding data points for each sampling time (10 minutes or 2 hours) with straight lines. From the "initial dispersion" graph, determine the dispersant dosage (ml) causing 50 percent dispersion. From the "final dispersion" graph, determine the dispersant dosage (ml) causing 25 percent dispersion.

Report the data in the format given in Table 4.

TABLE 4

REQUIRED DISPERSANT EFFECTIVENESS TESTS RESULTS

Volume Dispersant (ml)	Initial Dispersion (10 minutes) Percent Dispersion for Replicate Number	Initial Dispersion (10 minutes) Mean Percent Dispersion	Final Dispersion (2 hours) Percent Dispersion for Replicate Number	Final Dispersion (2 hours) Mean Percent Dispersion
3	1 - 2 - 3 -	-	1 - 2 - 3 -	-
10	1 - 2 - 3 -	-	1 - 2 - 3 -	-
25	1 - 2 - 3 -	-	1 - 2 - 3 -	-

Dosage (ml) causing 50 percent dispersion (from "initial dispersion" graph) ____ ml

Dosage (ml) causing 25 percent dispersion (from "final dispersion" graph) ____ ml.

2.9 *Comments on Revisions to Dispersant Effectiveness Tests.* The comments discussed here refer only to these revisions to the dispersant effectiveness test described by McCarthy et al. (1).

Addition to Test Oil and Dispersant. Rewick et al. (2), (3), found that the method described in the revised method for adding the same amount of test oil and dispersant significantly improved the precision of the test. The percent standard deviation of the initial and final amount of oil dispersed was determined for dispersant C, E, and F using the method described in McCarthy et al. (1). The data for dispersants A, B, and D were obtained using the weighing method for the oil and dispersant described in the revised procedure. The average percent standard deviation was reduced from 41.6 percent to 4.9 percent for No. 6 fuel oil. Additional testing of dispersants on EPA's NCP Product Schedule recently has been initiated to determine the precision of the Revised Standard Dispersant Effectiveness Test Procedures.

Inclusion of the Oil Blank. Rewick et al. (2) found that the optical density of the oil blank was significantly higher than the dispersant blank. Including an oil blank increased the accuracy of the test because it corrects for the light absorption of the water-soluble components of the fuel (amount of test oil dispersed into the water column in the absence of a dispersant is low).

Dispersant-to-Oil Ratio. The maximum effectiveness of many dispersants occurs at dispersant-to-oil (D/O) ratios of less than 0.10 or 0.25 (10 or 25 ml dispersant) (see Figure 1, Rewick et al. (3)). Furthermore, the manufacturer's recommended application rates are usually less than D/O=0.10, and the actual application rates in a real spill may be less than a D/O=0.10 specifically when applied by aircraft. Therefore, the revised

method specifies testing the dispersants at D/O=0.03, 0.10, and 0.25.

3.0 Revised Standard Dispersant Toxicity Test

3.1 *Summary of Method.* The standard toxicity test for dispersants involves exposing two species (*Fundulus heteroclitus* and *Artemia salina*) to five concentrations of the test dispersant and No. 2 fuel oil alone and in a 1:10 mixture of dispersant to oil. To aid in comparing results from assays performed by different workers, reference toxicity tests are conducted using dodecyl sodium sulfate as a reference toxicant. The test length is 96 hours for *Fundulus* and 48 hours for *Artemia*. LC50s are calculated based on mortality date at the end of the exposure period (for method of calculation, see section 3.6 below).

3.2 *Selection and Preparation of test Materials. Test Organisms. Fundulus heteroclitus.* Obtain test fish from a single source for each series of toxicity tests. Report any known unusual condition to which fish were exposed before use (e.g., pesticides or chemotherapeutic agents); avoid if possible. Use small fish 2.5 to 3.8 cm (1 to 1.5 inches) in length and weighing about 1 gram. The longest individual fish should be no more than 1.5 times the length of the smallest.

Acclimate test fish to a temperature of 20±1°C, a pH of 8.0±0.2, and 20 ± 2ppt salinity for 10 to 14 days before using them for the toxicity tests. Eliminate groups of fish having more than 20 percent mortality during the first 48 hours, and more than five percent thereafter. During acclimation, feed all species a balanced diet. Dry, pelleted, commercially available fishfood containing 30 percent to 45 percent protein is satisfactory. The pellets should be easily consumable by the test fish. Feed the fish twice daily to satiation, but not for 24 hours before or during the bioassay test. Use only those organisms that feed actively and appear to be healthy. Discard any fish injured or dropped while handling.

Artemia Salina. To ensure uniformity of *Artemia* (brine shrimp), use eggs from the San Francisco Bay area. Since the eggs of *Artemia* may be kept desiccated for long periods in a viable state, required numbers of the organism can be secured at any time for use in the bioassay tests through the use of proper hatching procedures.

A rectangular tray (plastic, glass, or enamel) having 200 square inches of bottom surface is suitable for hatching *Artemia* eggs. Divide this tray into two parts by a partition that extends from the top down to about 1.9 to 1.3 cm (0.75 to 0.5 inch) from the bottom. This partition may be of any opaque, biologically inert material (a pasteboard strip, sealed with paraffin wrapping, is satisfactory). Raise one end of the tray about 1.27 cm (0.5 inch) and add 3 liters of the synthetic seawater formulation (see Table 5).

Spread 0.5 gram of *Artemia* eggs in the shallow end of the tray. Cover this end of the tray with a piece of cardboard to keep the eggs in darkness until hatching is complete. About 20 hours after the eggs hatch, direct a narrow beam of light across the uncovered portion of the tray. Since brine shrimp are phototactic, they will swim beneath the partition into the illuminated end of the chamber and congregate in the beam of light. The *Artemia* concentrated in the beam of light can be easily collected with the use of a collecting pipette or siphon connected to a 30-cm (12-inch) rubber tube and mouthpiece. Transfer them to a beaker containing a small amount of the artificial seawater.

An alternative method for hatching *Artemia* eggs is to use a separator funnel. A small air line is placed in the botton of the funnel and air is bubbled at a rate sufficient to keep the eggs from settling to the bottom. After the eggs hatch, the air line is removed and the newly hatched nauplii will settle to the bottom of the funnel where they can be drawn off without disturbing the empty egg cases, which will have floated to the surface.

Preparation of Experimental Water. Because large quantities of dilution water will be used in these tests, formulate the experimental water in large batches to ensure uniformity and constant conditions for the various tests. To prevent contamination, prepare and store the experimental water in inert containers of suitable size.

Synthetic Seawater Formation. To prepare standard seawater, mix technical-grade salts with 900 liters of distilled or demineralized water in the order and quantities listed in Table 5. These ingredients must be added in the order listed and each ingredient must be dissolved before another is added. Stir constantly after each addition during preparation until dissolution is complete.

Add distilled or demineralized water to make up to 1,000 liters. The pH should now be 8.0 ± 0.2. To attain the desired salinity of 20 ± 1 ppt, dilute again with distilled or demineralized water at time of use.

3.3 *Sampling and Storage of Test Materials.* Toxicity tests are performed with No. 2 fuel oil having the characteristics defined in Table 6. Store oil used in toxicity tests in sealed containers to prevent the loss of volatiles and other changes. For ease in handling and use, it is recommended that 1,000-ml glass containers be used. To ensure comparable results in the bioassay tests, use oils packaged and sealed at the source. Dispose of unused oil in each open container on completion of dosing to prevent its use at a later date when it may have lost some of its volatile components. Run all tests in a bioassay series with oil from the same container and with organisms from the same group collected or secured from the same source.

TABLE 5—SYNTHETIC SEAWATER

[Toxicity test]

Salt	(g) [1]
NaF	1.9
$SrCl_2 \cdot 6H_2O$	13.0
H_3BO_3	20.0
KBr	67.0
KCl	466.0
$CaCl_2 \cdot 2H_2O$	733.0
Na_2SO_4	2,660.0
$MgCl_2 \cdot 6H_2O$	3,330.0
NaCl	15,650.0
$Na_2SiO_3 \cdot 9H_2O$	13.0
EDTA [2]	0.4
$NaHCO_3$	133.0

[1] Amount added to 900 liters of water, as described in the text.

[2] Ethylenediaminetetraacetate tetrasodium salt.

TABLE 6.—TEST OIL CHARACTERISTICS: NO. 2 FUEL OIL

Characteristic	Minimum	Maximum
Gravity (°API)	32.1	42.8
Viscosity kinematic at 100°F (cs)	2.35	3.00
Flash point (°F)	150	.....
Pour point (°F)	.....	0
Cloud point (°F)	.....	10
Sulfur (wt %)	.....	0.35
Aniline point (°F)	125	160
Carbon residue (wt %)	.....	0.10
Water (vol %)	.....	0
Sediment (wt %)	.....	0
Aromatics (vol %)	10	15
Distillation:		
IBP (°F)	347	407
10% (°F)	402	450
50% (°F)	475	530
90% (°F)	542	606
End Point (°F)	596	655
Neutralization No.	.....	0.05

3.4 *General Test Conditions and Procedures for Toxicity Tests. Temperature.* For these toxicity tests, use test solutions with temperatures of 20 ± 1°C.

Dissolved Oxygen and Aeration. Fundulus. Because oils and dispersants contain toxic, volatile materials, and because the toxicity of some water-soluble fractions of oil and degradation products are changed by oxidation, special care must be used in the oxygenation of test solutions. A 2 liter volume of solution is used for the *Fundulus* test. Initiate aeration to provide dissolved oxygen (DO)) and mixing after the fish are added. The DO content of test solutions must not drop below 4 ppm. Aerate at a rate of 100 ± 15 bubbles per minute supplied from a 1-ml serological pipette. At this rate and with the proper weight of fish, DO concentration should remain slightly above 4 ppm over a 96-hour period. Take DO measurements daily.

Artemia. Achieve sufficient DO by ensuring the surface area to volume ratio of the test solution exposed is large enough. Oxygen content should remain high throughout the test because of the small quantity of test substances added and the low oxygen demand of organisms in each dish.

Controls. With each fish or *Artemia* test or each series of simultaneous tests of different solutions, perform a concurrent control test in exactly the same manner as the other tests and under the conditions prescribed or selected for those tests. Use the diluent water alone as the medium in which the controls are held. There must be no more than 10 percent mortality among the controls during the course of any valid test.

Reference Toxicant. To aid in comparing results from tests performed by different workers and to detect changes in the condition of the test organisms that might lead to different results, perform reference toxicity tests with reagent grade dodecyl sodium sulfate (DSS) in addition to the usual control tests. Prepare a stock solution of DSS immediately before use by adding 1 gram of DSS per 500 ml of test water solution. Use exploratory tests before the full scale tests are begun to determine the amount of reference standard to be used in each of the five different concentrations.

Number of Organisms. For the toxicity test procedures using *Fundulus*, place two fish in each jar. For the toxicity tests using *Artemia*, place 20 larvae in each container.

Transfer of Organisms. Transfer *Fundulus* from the acclimatizing aquaria to the test containers only with small-mesh dip nets of soft material, and do not rest the net on any dry surface. Do not hold fish out of the water longer than necessary. Discard any specimen accidentally dropped or otherwise mishandled during transfer.

Artemia can be conveniently handled and transferred with a small pipette connected to a 30-cm (12-inch) length of rubber tubing and mouthpiece or with a Pasteur pipette equipped with a small rubber squeeze bulb. To have the necessary *Artemia* ready for the study, transfer 20 *Artemia* apiece into small beakers containing 20 ml of artificial seawater. Hold these batches of *Artemia* until they are 24 hours old; at that time, place them in the respective series of test concentrations set up for the toxicity test.

To avoid large fluctuations in the metabolic rate of organisms and the fouling of test solutions with metabolic waste products and uneaten food, do not feed organisms during tests.

Test Duration and Observations. Fish. Observe the number of dead fish in each test container and record at the end of each 24-hour period. Fish are considered dead upon cessation of respiratory and all other overt movements, whether spontaneous or in response to mild mechanical prodding. Remove dead fish as soon as observed.

Also note and report when the behavior of test fish deviates from that of control fish. Such behavioral changes would include variations in opercular movement, coloration, body orientation, movement, depth in container, schooling tendencies, and others. Abnormal behavior of the test organisms (especially during the first 24 hours) is a desirable parameter to monitor in a toxicity test because changes in behavior and appearance may precede mortality. Toxicants can reduce an organism's ability to survive natural stresses. In these cases, the mortality is not directly attributed to the toxicant, but most certainly is an indirect effect. Reports on behavioral changes during a toxicity test can give insight into the nonacute effects of the tested material.

At the end of the 96-hour period, terminate the fish tests and determine the LC50 values.

Artemia. Terminate the *Artemia* test after 48 hours of incubation. To count the dead animals accurately and with relative ease, place the test dishes on a black surface and hold a narrow beam of light parallel to the bottom of the dish. Most of the dead *Artemia* will be on the bottom of the test dish and can be readily seen against the black background. Also search the top of the liquid for *Artemia* trapped there by surface tension. Exercise caution when determining death of the animals. Occasionally, an animal appears dead, but closer observation shows slight movement of an appendage or a periodic spasm of its entire body. For this test, animals exhibiting any movement when touched with a needle are considered alive. Account for all test animals to ensure accuracy since some *Artemia* may disintegrate. Consider individuals not accounted for as dead.

At the end of 48 hours of exposure, terminate the *Artemia* assay and determine the LC50 values.

Physical and Chemical Determinations. Fundulus. Determine the temperature, DO, and pH of the test solutions before the fish are added and at 24-, 72-, and 96-hour exposure intervals. It is necessary to take measurements from only one of the replicates of each of the toxicant series.

Artemia. Determine the temperature, DO, and pH of the test solutions before the nauplii are added and at the 48-hour exposure interval. Measure DO and pH in only one of the replicates of each of the toxicant series.

Testing Laboratory. An ordinary heated or air-conditioned laboratory room with thermostatic controls suitable for maintaining the prescribed test temperatures generally will suffice to conduct the toxicity tests. Where ambient temperatures cannot be controlled to 20 ±1°C, use water baths with the necessary temperature controls.

Test Containers. For fish tests, use 4-liter glass jars measuring approximately 22.5 cm in height, 15 cm in diameter and 11 cm in diameter at the mouth. The jars are to have screw top lids, lined with Teflon. In conducting the test, add to each of the jars 2 liters of the synthetic seawater formulation aerated to saturation with DO. To add the 2 liters easily and accurately, use a 2-liter-capacity, automatic dispensing pipette (Figure 3).

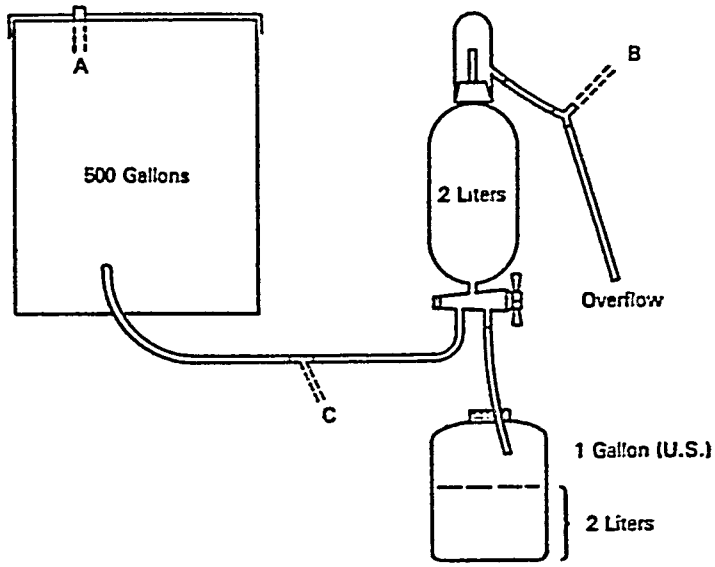

A = Inflow from Large Holding Reservoir

B = Overflow from Other Units in Series

C = Inflow to Other Units

Figure 3. Schematic Diagram of Automatic Dispensing Pipette System

For the *Artemia* tests, use Carolina culture dishes (or their equivalent) having dimensions approximately 8.9 cm by 3.8 cm (3.5 by 1.5 inches).

Process all required glassware before each test. Immerse in normal hexane for 10 minutes. Follow this with a thorough rinse with hot tap water, three hot detergent scrubs, an additional hot tap-water rinse, and three rinses with distilled water. Oven or air dry the glassware in a reasonably dust-free atmosphere.

3.5 *Preparation of Test Concentrations. Fundulus.* Place the test jars containing 2 liters of synthetic seawater on a reciprocal shaker. The shaker platform should be adapted to hold firmly six of the toxicity test jars. Add the desired amount of the petroleum product under test directly to each test jar. Dispense the appropriate amount of toxicant into the jars with a pipette. Tightly cap the test jars and shake for 5 minutes at approximately 315 to 333 2-cm (0.75-inch) strokes per minute in a reciprocal shaker or

at approximately 150 to 160 rpm on orbital shakers. At the completion of shaking, remove the jars from the shaker to a constant-temperature water bath or room, remove the lids, take water quality measurements, add two test fish, and initiate aeration.

Artemia. To prepare test solutions for dispersants and oil/dispersant mixtures, blend or mix the test solutions with an electric blender having: speeds of 10,000 rpm or less, a stainless-steel cutting assembly and a 1-liter borosilicate jar. To minimize foaming, blend at speeds below 10,000 rpm.

For the dispersant test solution, add 550 ml of the synthetic seawater to the jar, then with the use of a gas-tight calibrated glass syringe with a Teflon-tipped plunger, add 0.55 ml of the dispersant and mix for 5 seconds.

For the oil test solution, add 550 ml of the synthetic seawater to the jar, then with the use of a gas-tight calibrated glass syringe equipped with a Teflon-tipped plunger, add 0.55 ml of the oil and mix for 5 seconds.

For the oil/dispersant mixture, add 550 ml of the synthetic seawater to the mixing jar. While the blender is in operation, add 0.5 ml of the oil under study with the use of calibrated syringe with Teflon-tipped plunger and then 0.05 ml of the dispersant as indicated above. Blend for 5 seconds after addition of dispersant. These additions provide test solutions of the dispersant, oil, and the oil/dispersant mixture at concentrations of 1,000 ppm.

Immediately after the test solutions are prepared, draw up the necessary amount of test solution with a gas-tight Teflon-tipped glass syringe of appropriate size and dispense into each of the five containers in each series. If the series of five concentrations to be tested are 10, 18 32, 56, and 100 ppm, the amount of the test solution in the order of the concentrations listed above would be as follows: 1.0, 1.8, 3.2, 5.6, and 10.0 ml.

Each time a syringe is to be filled for dispensing to the series of test containers, start the mixer and withdraw the desired amount in the appropriate syringe while the mixer is in operation. Turn off immediately after the sample is taken to limit the loss of volatiles.

Use exploratory tests before the full-scale test is set up to determine the concentration of toxicant to be used in each of the five different concentrations. After adding the required amounts of liquid, bring the volume in each of the test containers up to 80 ml with the artificial seawater. To ensure keeping each of the series separate, designate on the lid of each container the date, the material under test, and its concentration.

When the desired concentrations are prepared, gently release into each dish the 20 test *Artemia* (previously transferred into 20 ml of medium). This provides a volume of 100 ml in each test chamber. A pair of standard cover glass forceps with flat, bent ends is an ideal tool for handling and tipping the small beaker without risk of contaminating the medium.

After adding the test animals, incubate the test dishes at 20 ± 1°C for 48 hours. Recommended lighting is 2,000 lumens/m² (200 ft-c) of diffused, constant, fluorescent illumination coming from beneath the culture dishes during incubation. Because *Artemia* are phototactic, bottom lighting should keep them from direct contact with the oil that sometimes layers on top.

Wash the blender thoroughly after use and repeat the above procedures for each series of tests. Wash the blender as follows: rinse with normal hexane, pour a strong solution of laboratory detergent into the blender to cover the blades, fill the container to about half of its volume with hot tap water, operate the blender for about 30 seconds at high speed, remove and rinse twice with hot tap water, mixing each rinse for 5 seconds at high speed, and then rinse twice with distilled water, mixing each rinse for 5 seconds at high speed.

3.6 *Calculating and Reporting.* At the end of the test period, the toxicity tests are terminated and the LC50 values are determined.

Calculations. The LC50 is the concentration lethal to 50 percent of the test population. It can be calculated as an interpolated value based on percentages of organisms surviving at two or more concentrations, at which less than half and more than half survived. The LC50 can be estimated with the aid of computer programs or graphic techniques (log paper). The 95 percent confidence intervals for the LC50 estimate should also be determined.

Reporting. The test dispersant and oil and their source and storage are described in the toxicity test report. Note any observed changes in the experimental water or the test solutions. Also include the species of fish used; the sources, size, and condition of the fish; data of any known treatment of the fish for disease or infestation with parasites before their use; and any observations on the fish behavior at regular intervals during tests. In addition to the calculated LC50 values, other data necessary for interpretation (e.g., DO, pH, other physical parameters, and the percent survival at the end of each day of exposure at each concentration of toxicant) should be reported.

3.7 *Summary of Procedures.*

Fundulus:

1. Prepare adequate stocks of the appropriate standard dilution water.

2. Add 2 liters of the standard dilution water to the 4-liter test jars. Each test consists of 5 replicates of each of 5 concentrations of the test material, a control series of 5 dishes, and a standard reference series of 5 different concentrations for a total of 35 dishes. Simultaneous performance of toxicity tests on the oil, dispersant, and oil/dispersant mixture requires a total of 105 dishes.

3. Add the determined amount (quarter points on the log scale) of test material to the appropriate jars. Preliminary tests will be necessary to define the range of definitive test concentrations.

4. Cap the jars tightly with the Teflon-lined screw caps and shake for 5 minutes at 315 to 333 2-cm (0.75-inch) strokes per minute on a reciprocal shaker.

5. Remove the jars from the shaker, take water quality data, and add two acclimated fish per jar.

6. Aerate with 100±15 bubbles per minute through a 1-ml serological pipette.

7. Observe and record mortalities, water quality, and behavioral changes each 24 hours.

8. After 96 hours, terminate the test, and calculate LC50 values and corresponding confidence limits.

Artemia:

1. Initiate the procedure for hatching the *Artemia* in sufficient time (approximately 48 hours) before the toxicity test is to be conducted so that 24-hour-old larvae are available.

2. With the use of a small pipette, transfer 20 *Artemia* into small beakers, each containing 20 ml of the proper synthetic seawater.

3. To prepare the test stock dispersant and oil solutions, add 550 ml of the artificial seawater to the prescribed blender jar. By means of a gas-tight glass syringe with a Teflon-tipped plunger, add 0.55 ml of the dispersant (or oil) and mix at 10,000 rpm for 5 seconds. To prepare the test stock oil/dispersant mixture, add 550 ml of the standard seawater to the blender jar. While the blender is in operation (10,000 rpm), add 0.5 ml of the oil, then 0.05 ml of the dispersant with the use of a calibrated syringe with a Telfon-tipped plunger. Blend for 5 seconds after adding the dispersant. One ml of these stock solutions added to the 100 ml of standard seawater in the test containers yields a concentration of 10 ppm dispersant, oil, or oil/dispersant combination (the test will be in a ratio of 1 part dispersant to 10 parts of oil).

4. Each test consists of 5 replications of each of 5 concentrations of the material under study, a control series of 5 dishes, and a standard reference series of 5 different concentrations, a total of 35 dishes. Simultaneous performance of toxicity tests on the oil, dispersant, and oil/dispersant mixture requires a total of 105 dishes. Immediately after preparing the test solution of the dispersant or oil/dispersant solution, and using an appropriately sized syringe, draw up the necessary amount of test solution and dispense into each of the five containers in each series.

Each time a syringe is to be filled for dispensing to the series of test containers, start the mixer and withdraw the desired amount in the appropriate syringe while the mixer is in operation. Turn mixer off immediately after the sample is taken to limit the loss of volatiles. After adding the required amount of the test oil/dispersant or dispersant mixture, bring the volume of liquid in each of the test containers up to 80 ml with the artificial seawater.

When the desired concentrations have been prepared, gently release into each dish the 20 nauplii previously transferred into 20 ml of medium. This provides a volume of 100 ml in each test chamber. Use a pair of standard cover glass forceps for handling and tipping the small beaker.

5. Wash the blender as prescribed for each series of tests.

6. Incubate the test dishes at 20 ±1°C for 48 hours with the prescribed lighting.

7. Terminate the experiment after 48 hours, observe and record the mortalities, and

determine the LC50s and corresponding confidence limits.

4.0 Summary Technical Product Test Data Format

The purpose of this format is to summarize in a standard and convenient presentation the technical product test data required by the U.S. Environmental Protection Agency (EPA) before a product may be added to EPA's NCP Product Schedule, that may be used in carrying out the National Oil and Hazardous Substances Pollution Contingency Plan. This format, however, is not to preclude the submission of all the laboratory data used to develop the data summarized in this format. Sufficient data should be presented on both the effectiveness and toxicity tests to enable EPA to evaluate the adequacy of the summarized data.

A summary of the technical product test data should be submitted in the following format. The numbered headings should be used in all submissions. The subheadings indicate the kinds of information to be supplied. The listed subheadings, however, are not exhaustive; additional relevant information should be reported where necessary. As noted some subheadings may apply only to particular types of agents.

I. *Name, Brand, or Trademark:*

II. *Name, Address, and Telephone Number of Manufacturer:*

III. *Name, Address, and Telephone Numbers of Primary Distributors:*

IV. *Special Handling and Worker Precautions for Storage and Field Application*

1. Flammability.
2. Ventilation.
3. Skin and eye contact; protective clothing; treatment in case of contact.
4. Maximum and minimum storage temperatures; optimum storage temperature range; temperatures of phase separations and chemical changes.

V. *Shelf Life.*

VI. *Recommended Application Procedure.*

1. Application method.
2. Concentration, application rate (e.g., gallons of dispersant per ton of oil).
3. Conditions for use: water salinity, water temperature, types and ages of pollutants.

VII(a). *Toxicity (Dispersants and Surface Collecting Agents):*

Materials tested	Species	LC50 (ppm)
Product	*Fundulus heteroclitus*	——96-hr.
	Artemia salina	——48-hr.
No. 2 fuel oil	*Fundulus heteroclitus*	——96-hr.
	Artemia salina	——48-hr.
Product and No. 2 fuel oil (1:10).	*Fundulus heteroclitus*	——96-hr.
	Artemia salina	——48-hr.

VII(b). *Effective (Dispersants):*

STANDARD EFFECTIVENESS TEST WITH NO. 6 FUEL OIL

Volume (ml) dispersant	Initial (10 min) mean percent dispersion	Final (2 hrs) mean percent dispersion
3		
10		
25		

Dosage causing 50 percent dispersion (from initial dispersion graph) is ——ml.

Dosage causing 25 percent dispersion (from initial dispersion graph) is ——ml.

VIII. *Microbiological Analysis (Biological Additives).*

IX. *Physical Properties of Dispersant/Surface Collecting Agent:*

1. *Flash Point:* (°F)
2. *Pour Point:* (°F).
3. *Viscosity:*——*at*——°F (furol seconds).
4. *Specific Gravity:*——*at*——°F.
5. *pH:* (10 percent solution if hydrocarbon based).
6. *Surface Active Agents (Dispersants).*[1]
7. *Solvents (Dispersants):*[1]
8. *Additives (Dispersants):*
9. *Solubility (Surface Collecting Agents):*

X. *Analysis for Heavy Metals and Chlorinated Hydrocarbons (Dispersants and Surface Collecting Agents):*

Compounds	Concentration (ppm)
Arsenic	
Cadmium	
Chromium	
Copper	
Lead	
Mercury	
Nickel	
Zinc	
Cyanide	
Chlorinated Hydrocarbons	

References

(1) L.T. McCarthy, Jr., I. Wilder, and J.S. Dorrler. *Standard Dispersant Effectiveness and Toxicity Tests.* EPA Report EPA-R2-73-201 (May 1973).

(2) R.T. Rewick, H.C. Bailey, and J.H. Smith. *Evaluation of Oil Spill Dispersant Testing Requirements,* draft report submitted in partial fulfillment of EPA Contract No. 68-03-2621. U.S. Environmental Protection Agency, Oil and Hazardous Materials Spills Branch, Edison, New Jersey (September 1982).

(3) R.T. Rewick, K.A. Sabo, J. Gates, J.H. Smith, and L.T. McCarthy, Jr. "An Evaluation of Oil Spill Dispersant Testing Requirements." *Proceedings, 1981 Oil Spill Conference,* Publication No. 4334. American Petroleum Institute, 1220 L Street, NW., Washington, DC 20005 (1981).

[FR Doc. 84-18631 Filed 7-17-84; 8:45 am]

BILLING CODE 6560-50-M

[1] If the submitter claims that the information presented under this subheading is confidential, this information should be submitted on a separate sheet of paper clearly labeled according to the subheading and entitled "Confidential Information."

Reader Aids

Federal Register
Vol. 49, No. 139
Wednesday, July 18, 1984

INFORMATION AND ASSISTANCE

SUBSCRIPTIONS AND ORDERS

Subscriptions (public)	202-783-3238
Problems with subscriptions	275-3054
Subscriptions (Federal agencies)	523-5240
Single copies, back copies of FR	783-3238
Magnetic tapes of FR, CFR volumes	275-2867
Public laws (Slip laws)	275-3030

PUBLICATIONS AND SERVICES

Daily Federal Register

General information, index, and finding aids	523-5227
Public inspection desk	523-5215
Corrections	523-5237
Document drafting information	523-5237
Legal staff	523-4534
Machine readable documents, specifications	523-3408

Code of Federal Regulations

General information, index, and finding aids	523-5227
Printing schedules and pricing information	523-3419

Laws

Indexes	523-5282
Law numbers and dates	523-5282
	523-5266

Presidential Documents

Executive orders and proclamations	523-5230
Public Papers of the President	523-5230
Weekly Compilation of Presidential Documents	523-5230

United States Government Manual	523-5230

Other Services

Library	523-4986
Privacy Act Compilation	523-4534
TDD for the deaf	523-5229

FEDERAL REGISTER PAGES AND DATES, JULY

27119-27292.....2
27293-27486.....3
27487-27728.....5
27729-27918.....6
27919-28036.....9
28037-28228.....10
28229-28386.....11
28387-28536.....12
28537-28690.....13
28691-28814.....16
28815-29050.....17
29051-29208.....18

CFR PARTS AFFECTED DURING JULY

At the end of each month, the Office of the Federal Register publishes separately a List of CFR Sections Affected (LSA), which lists parts and sections affected by documents published since the revision date of each title.

1 CFR

Proposed Rules:
1.....27910, 28252
2.....27910, 28252
7.....27910, 28252
8.....27910, 28252
9.....27910, 28252
10.....27910, 28252
15.....27910, 28252
18.....27910, 28252
20.....27910, 28252
21.....27910, 28252

3 CFR

Administrative Orders:
Presidential Determinations:
No. 84-8 of May 29, 1984.....28815
No. 84-11 of June 12, 1984.....28817
No. 84-12 of June 18, 1984.....28819
Executive Orders:
12473 (Amended by E.O. 12484.....28825
12484.....28825
12485.....28827
Memorandums:
July 11, 1984.....28821
Proclamations:
5215.....27119
5216.....27729
5217.....27919
5218.....28229
5219.....28231
5220.....28387
5221.....28537
5222.....28823
5223.....29051

5 CFR

532.....28347
534.....28389
550.....27470
792.....27921
2502.....28233
2504.....28235
Proposed Rules:
771.....28721

7 CFR

2.....29053
28.....27731, 28389
29.....27466
68.....27731
278.....28391
279.....28391
301.....27478
354.....27487
405.....28037
434.....27121
435.....28037
438.....27125
446.....27129
658.....27716
724.....27133
725.....27133
726.....27133
800.....28539
908.....27293, 28037, 28829
910.....27918, 28539
911.....28038
916.....28540
917.....28540
923.....27135
924.....27731
1464.....27133
1772.....28236, 28393
1922.....28236
1980.....28039
Proposed Rules:
Ch. IX.....27524, 28408
Ch. X.....27769
251.....27159
411.....27949
419.....28061
422.....27950
434.....27160
436.....27950
437.....27951
446.....27162
449.....28066
907.....29071
908.....29071
910.....28566
946.....28070
967.....28070
1004.....29100
1033.....28721
1036.....28408
1139.....28855
1772.....27952, 28071

8 CFR

100.....27136
103.....28396
238.....27136, 27732
Proposed Rules:
239.....29104

9 CFR

3.....27922
50.....28039, 28040
92.....27136, 27922
309.....27732
310.....27732
318.....27732
Proposed Rules:
308.....28252
318.....28252
320.....28252
327.....28252
381.....28252

10 CFR

30 ... 27923
33 ... 27923
34 ... 27923
35 ... 27923
40 ... 27923
50 ... 27733, 27736
1045 ... 27737

Proposed Rules:

9 ... 28072
50 ... 27769, 28409

12 CFR

4 ... 27293
7 ... 28237
26 ... 28041
212 ... 28041
217 ... 28238, 28691
220 ... 27295
303 ... 28541
304 ... 27487, 29053
330 ... 27294
348 ... 28041
561 ... 27294
563 ... 27295
563f ... 28041
564 ... 27294
571 ... 27295
572a ... 28691
711 ... 28041

Proposed Rules:

Ch. I ... 28566

13 CFR

120 ... 28044
121 ... 27924, 27925
140 ... 27138

Proposed Rules:

120 ... 27162
136 ... 27164

14 CFR

39 ... 28396, 28692, 29054
71 ... 27299, 27740, 27741, 27927, 28239
95 ... 27299
97 ... 27742
298 ... 28239

Proposed Rules:

39 ... 28252
71 ... 27772, 29105
93 ... 27323

16 CFR

13 ... 27928, 27930
305 ... 27142
703 ... 28397
1205 ... 28240
1401 ... 28693

Proposed Rules:

13 ... 27773
703 ... 28411

17 CFR

5 ... 27933
202 ... 27306
230 ... 27306, 28044
239 ... 28044
240 ... 27306, 28044
249 ... 28044
250 ... 27306, 27307
256 ... 27307
256a ... 27307
257 ... 27307
260 ... 28044
269 ... 28044
270 ... 27306
275 ... 27306

Proposed Rules:

1 ... 27775
145 ... 27776
150 ... 28253
240 ... 27172

18 CFR

2 ... 27934
154 ... 27935
271 ... 27934, 27935
385 ... 29055

Proposed Rules:

803 ... 28412

19 CFR

4 ... 28695
6 ... 28695
10 ... 28695
18 ... 28695
19 ... 28695
24 ... 28695, 28700
101 ... 27142, 28695
103 ... 28695
141 ... 28695
144 ... 28695
148 ... 28695
177 ... 28695

Proposed Rules:

18 ... 28855
24 ... 28855
101 ... 27172
112 ... 28855
141 ... 27954, 28855
144 ... 28855
146 ... 28855
171 ... 28883
172 ... 28883
175 ... 28884
177 ... 28885, 28886
191 ... 28855

20 CFR

404 ... 28546

21 CFR

5 ... 27315, 27489
74 ... 27744
101 ... 28547
102 ... 28241
155 ... 28398
173 ... 28548, 28830
193 ... 29056
201 ... 27936
310 ... 27936
436 ... 27489
520 ... 28549, 29056
556 ... 27315, 29057
558 ... 27315, 27936, 29057
1316 ... 28700

Proposed Rules:

102 ... 28412
161 ... 28413
510 ... 27543

22 CFR

303 ... 28701

Proposed Rules:

305 ... 28255

23 CFR

635 ... 28549

24 CFR

207 ... 27489
255 ... 27489
888 ... 27658
913 ... 28705

Proposed Rules:

Ch. VIII ... 28413
201 ... 27553
590 ... 27572
970 ... 28414

25 CFR

249 ... 27937

26 CFR

1 ... 27317
30 ... 28706
31 ... 28706

Proposed Rules:

1 ... 28739

27 CFR

Proposed Rules:

4 ... 28417
9 ... 28257, 28260

28 CFR

16 ... 27143

29 CFR

1917 ... 28550
2619 ... 28551

Proposed Rules:

1907 ... 28739
1910 ... 28739, 29105
1935 ... 28739
1936 ... 28739
2520 ... 27954

30 CFR

773 ... 27493
870 ... 27493
901 ... 27500
914 ... 28044
915 ... 28707
916 ... 28707
935 ... 27505
938 ... 27318
942 ... 27506

Proposed Rules:

913 ... 27324
920 ... 27582, 28741
931 ... 28742
942 ... 27325
946 ... 28743
948 ... 28418

31 CFR

408 ... 28552
500 ... 27144
515 ... 27144

Proposed Rules:

10 ... 27326
51 ... 27777

32 CFR

505 ... 28399

33 CFR

100 ... 27744–27746, 28056, 28400–28404
110 ... 27320
117 ... 27747, 28404
165 ... 27320, 27939, 28405, 00000

Proposed Rules:

Ch. I ... 27786
100 ... 28418
110 ... 28419
166 ... 28074

34 CFR

307 ... 28360
309 ... 28350
315 ... 28020
318 ... 28370
326 ... 28380
614 ... 29018
624 ... 28520
628 ... 28520

Proposed Rules:

75 ... 28264
76 ... 28264
200 ... 28264
298 ... 28212, 28264
668 ... 28264

36 CFR

223 ... 28241

38 CFR

21 ... 29058
3 ... 28241
36 ... 28242

Proposed Rules:

3 ... 28267
21 ... 27954
36 ... 28887

39 CFR

Proposed Rules:

10 ... 28571

40 CFR

1 ... 27942
52 ... 27507, 27748–27750, 27943, 27944, 28243, 28406, 28553
60 ... 28554, 28556, 28708, 28715
61 ... 28556, 28708, 28715
65 ... 28559
81 ... 27752, 27944, 28243
124 ... 27508
125 ... 28560
147 ... 28057
261 ... 27751
271 ... 28245
300 ... 29192
403 ... 28058
439 ... 27145
461 ... 27946
712 ... 27946
761 ... 28154, 28172, 28193, 29066

Proposed Rules:

52 ... 27583, 27584, 27787, 27954, 29108
65 ... 28268, 28271
81 ... 28888
123 ... 28273
180 ... 29110–29114
228 ... 28744
264 ... 28274
271 ... 27585, 28074, 28076
761 ... 28203

41 CFR

Ch. 60 ... 27946

Ch. 201 27509
60-999 27946
Proposed Rules:
34-30 28264
101-45 27955
101-47 28420

42 CFR

405 27172
Proposed Rules:
405 ..... 27422, 28889, 29026
431 29026
433 29026
456 29026
466 29026
473 29041

43 CFR

2710 29012
5000 28560
Public Land Orders:
6535 28407

44 CFR

65 ..... 28831, 28832
67 28833
Proposed Rules:
67 ..... 27956, 28890-28893

45 CFR

96 27145
1629 28716

46 CFR

502 27753
Proposed Rules:
Ch. I 28893
67 28744

47 CFR

Ch. I 27754, 28835
2 27146
13 29067
68 27763
73 ..... 27146, 27320, 27321, 27509, 27947, 28844, 29067
74 ..... 27147, 29067
76 27152
Proposed Rules:
Ch. I 27792
1 27179
2 27179
15 27179
21 27179
22 ..... 27179, 27792
23 27179
25 28275
68 27179
73 ..... 27179, 27328-27331, 27796, 27956-27960, 28077
76 27179
81 27179
83 27179
90 27179
94 27179
95 27179

48 CFR

Ch. 15 28246
Ch. 22 28847
Proposed Rules:
15 28421
31 28571

49 CFR

387 27288
571 28962
821 28246
1002 27154
1039 ..... 27321, 28718
1043 27767
1300 28718
Proposed Rules:
171 27180
173 27180
175 27180
218 27797
225 27797
571 27181
1039 27333
1048 28572
1103 28276
1160 27182
1165 27182

50 CFR

17 ..... 27510, 28562
267 27514
611 ..... 27155, 27322, 27518
630 27521
652 ..... 27156, 28720
658 28059
663 27518
672 ..... 27322, 27521, 28853
674 27522
675 27322
Proposed Rules:
17 ..... 27183, 28572, 28580, 28583
20 28026
32 ..... 27334, 28079
628 28276
642 28080
661 28422
662 27797
663 28283

LIST OF PUBLIC LAWS

Last List July 16, 1984

This is a continuing list of public bills from the current session of Congress which have become Federal laws. The text of laws is not published in the **Federal Register** but may be ordered in individual pamphlet form (referred to as "slip laws") from the Superintendent of Documents, U.S. Government Printing Office, Washington, D.C. 20402 (phone 202-275-3030).

H.R. 3825 / Pub. L. 98-357

To establish a boundary for the Black Canyon of the Gunnison National Monument, and for other purposes. (July 13, 1984; 98 Stat. 397) Price: $1.50

H.R. 4308 / Pub. L. 98-358

Granting the consent of the Congress to an interstate compact for the preparation of a feasibility study for the development of a system of high-speed intercity rail passenger service. (July 13, 1984; 98 Stat. 399) Price: $1.50

H.R. 3922 / Pub. L. 98-359

Postal Savings System Statute of Limitations Act (July 13, 1984; 98 Stat. 402) Price: $1.50

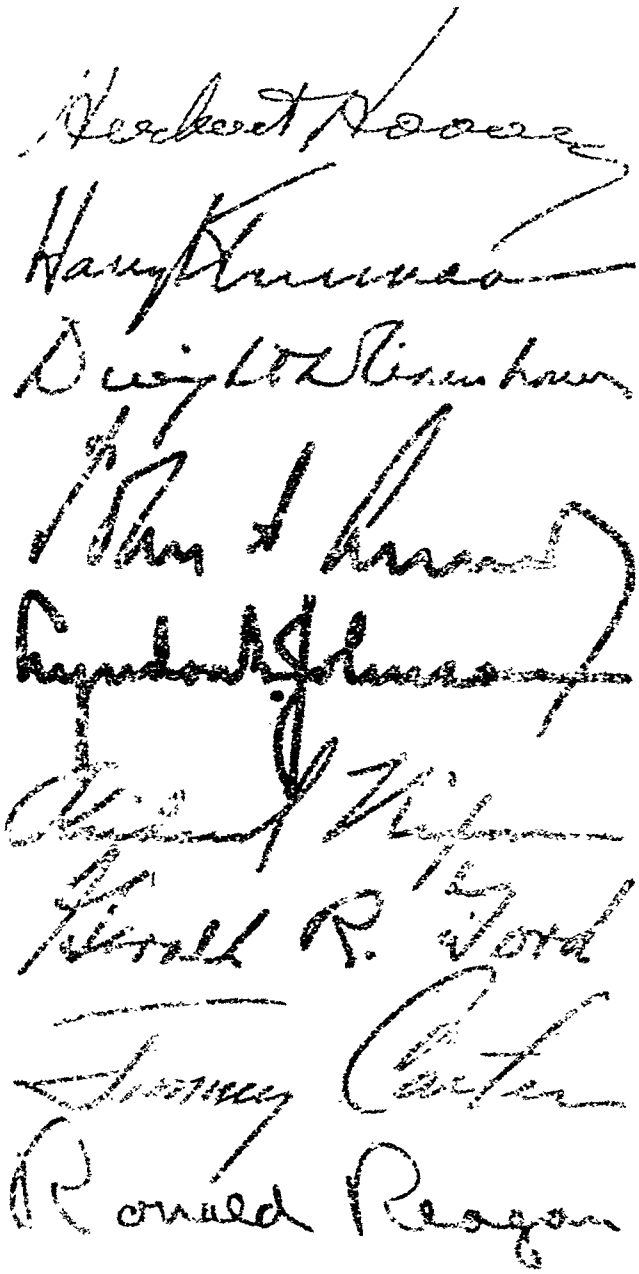

Public Papers of the Presidents of the United States

Annual volumes containing the public messages and statements, news conferences, and other selected papers released by the White House.

Volumes for the following years are now available:

Herbert Hoover

1929 ..... $19.00
1930 ..... $19.00
1931 ..... $20.00
1932–33 ..... $24.00

Proclamations & Executive Orders-March 4, 1929 to March 4, 1933
2 Volume set $32.00

Harry Truman

1945 ..... $18.00
1946 ..... $17.00
1947 ..... $17.00
1948 ..... $22.00
1949 ..... $18.00
1950 ..... $19.00
1951 ..... $20.00
1952–53 ..... $24.00

Dwight D. Eisenhower

1953 ..... $20.00
1954 ..... $23.00
1955 ..... $20.00
1956 ..... $23.00
1957 ..... $20.00
1958 ..... $20.00
1959 ..... $21.00
1960–61 ..... $23.00

John Kennedy

1961 ..... $20.00
1962 ..... $21.00
1963 ..... $21.00

Lyndon B. Johnson

1963–64 (Book I) $21.00
1963–64 (Book II) $21.00
1965 (Book I) $18.00
1965 (Book II) $18.00
1966 (Book I) $19.00
1966 (Book II) $20.00
1967 (Book I) $19.00
1967 (Book II) $18.00
1968–69 (Book I) $20.00
1968–69 (Book II) $19.00

Richard Nixon

1969 ..... $23.00
1970 ..... $24.00
1971 ..... $25.00
1972 ..... $24.00
1973 ..... $22.00
1974 ..... $18.00

Gerald R. Ford

1974 ..... $19.00
1975 (Book I) $22.00
1975 (Book II) $22.00
1976–77 (Book I) $23.00
1976–77 (Book II) $22.00
1976–77 (Book III) $22.00

Jimmy Carter

1977 (Book I) $23.00
1977 (Book II) $22.00
1978 (Book I) $24.00
1978 (Book II) $25.00
1979 (Book I) $24.00
1979 (Book II) $24.00
1980–81 (Book I) $21.00
1980–81 (Book II) $22.00
1980–81 (Book III) $24.00

Ronald Reagan

1981 ..... $25.00
1982 (Book I) $19.00

Published by Office of the Federal Register, National Archives and Records Service, General Services Administration

Order from Superintendent of Documents, U.S. Government Printing Office, Washington, D.C. 20402