2-26-88
Vol. 53 No. 38
Pages 5749-5968

federal register

Friday
February 26, 1988

Briefings on How To Use the Federal Register—
For information on briefings in Tampa, FL, and Fort Lauderdale, FL, see announcement on the inside cover of this issue.

FEDERAL REGISTER Published daily, Monday through Friday, (not published on Saturdays, Sundays, or on official holidays), by the Office of the Federal Register, National Archives and Records Administration, Washington, DC 20408, under the Federal Register Act (49 Stat. 500, as amended; 44 U.S.C. Ch. 15) and the regulations of the Administrative Committee of the Federal Register (1 CFR Ch. I). Distribution is made only by the Superintendent of Documents, U.S. Government Printing Office, Washington, DC 20402.

The **Federal Register** provides a uniform system for making available to the public regulations and legal notices issued by Federal agencies. These include Presidential proclamations and Executive orders and Federal agency documents having general applicability and legal effect, documents required to be published by act of Congress and other Federal agency documents of public interest. Documents are on file for public inspection in the Office of the Federal Register the day before they are published, unless earlier filing is requested by the issuing agency.

The **Federal Register** will be furnished by mail to subscribers for $340.00 per year, or $170.00 for 6 months in paper form, or $188.00 per year, or $94.00 for six months in microfiche form, payable in advance. The charge for individual copies is $1.50 for each issue, or $1.50 for each group of pages as actually bound. Remit check or money order, made payable to the Superintendent of Documents, U.S. Government Printing Office, Washington, DC 20402, or charge to your GPO Deposit Account or VISA or Mastercard.

There are no restrictions on the republication of material appearing in the **Federal Register**.

How To Cite This Publication: Use the volume number and the page number. Example: 53 FR 12345.

SUBSCRIPTIONS AND COPIES

PUBLIC

Subscriptions:

Paper or fiche	202-783-3238
Magnetic tapes	275-3328
Problems with public subscriptions	275-3054

Single copies/back copies:

Paper or fiche	783-3238
Magnetic tapes	275-3328
Problems with public single copies	275-3050

FEDERAL AGENCIES

Subscriptions:

Paper or fiche	523-5240
Magnetic tapes	275-3328
Problems with Federal agency subscriptions	523-5240

For other telephone numbers, see the Reader Aids section at the end of this issue.

THE FEDERAL REGISTER
WHAT IT IS AND HOW TO USE IT

FOR: Any person who uses the Federal Register and Code of Federal Regulations.

WHO: The Office of the Federal Register.

WHAT: Free public briefings (approximately 2 1/2 hours) to present:

1. The regulatory process, with a focus on the Federal Register system and the public's role in the development of regulations.
2. The relationship between the Federal Register and Code of Federal Regulations.
3. The important elements of typical Federal Register documents.
4. An introduction to the finding aids of the FR/CFR system.

WHY: To provide the public with access to information necessary to research Federal agency regulations which directly affect them. There will be no discussion of specific agency regulations.

TAMPA, FL

WHEN: March 24; at 9:30 a.m.
WHERE: Auditorium
Tampa-Hillsborough County Public Library
900 North Ashley Drive, Tampa, FL.
RESERVATIONS: Call the St. Petersburg Federal Information Center on the following local numbers

St. Petersburg	813-893-3495
Tampa	813-229-7911
Orlando	305-422-1800

FORT LAUDERDALE, FL

WHEN: March 25; at 10:00 a.m.
WHERE: Room 8 A and B
Broward County Main Library
100 S. Andrews Avenue, Fort Lauderdale, FL.
RESERVATIONS: Call the St. Petersburg Federal Information Center on the following local numbers:

Fort Lauderdale	305-522-8531
Miami	305-536-4155
West Palm Beach	305-833-7566

Contents

Federal Register
Vol. 53, No. 38
Friday, February 26, 1988

Agricultural Marketing Service
RULES
Beef promotion and research order, 5752
Lemons grown in California and Arizona, 5752
Oranges (navel) grown in Arizona and California, 5751
PROPOSED RULES
Milk marketing orders:
Southern Illinois, 5777
Nectarines pears, plums, and peaches grown in California, 5776

Agricultural Research Service
NOTICES
Procurement:
Commercial activities, performance; cost comparison study (OMB A-76 implementation), 5811

Agriculture Department
See Agricultural Marketing Service; Agricultural Research Service; Animal and Plant Health Inspection Service; Cooperative State Research Service

Air Force Department
NOTICES
Environmental statements; availability, etc.:
Peacekeeper Rail Garrison System, 5816

Animal and Plant Health Inspection Service
RULES
Exportation and importation of animals and animal products:
Wild pheasant and grouse carcasses, eviscerated, 5758

Army Department
NOTICES
Environmental statements; availability, etc.:
Chemical stockpile disposal program, 5816

Blind and Other Severely Handicapped, Committee for Purchase From
See Committee for Purchase From the Blind and Other Severely Handicapped

Commerce Department
See Export Administration; Foreign-Trade Zones Board; International Trade Administration; National Oceanic and Atmospheric Administration

Committee for Purchase From the Blind and Other Severely Handicapped
NOTICES
Procurement list, 1988:
Additions and deletions, 5815

Committee for the Implementation of Textile Agreements
NOTICES
Cotton, wool, and man-made textiles:
Indonesia, 5814
Indonesia: correction, 5815

Cooperative State Research Service
NOTICES
Grants; availability, etc.:
Competitive research grants program, 5962

Defense Department
See also Air Force Department; Army Department
PROPOSED RULES
Federal Acquisition Regulation (FAR):
Service Contract Act; labor standards for contracts, 5928
Small business subcontracting plans for contracts with options, 5928

Education Department
PROPOSED RULES
Bilingual education and minority language affairs:
Refugee children; transition program, 5956
NOTICES
Agency information collection activities under OMB review, 5817
Grants; availability, etc.:
Emergency immigrant education program, 5818
Handicapped migratory agricultural and seasonal farmworker vocational rehabilitation service projects program, 5819
Refugee children transition program, 5819
Special education and rehabilitative services:
Blind vending facilities; arbitration panel decision under Randolph-Sheppard Act, 5820

Employment and Training Administration
NOTICES
Adjustment assistance:
Dana Engine Products et al., 5842
General Motors Corp., 5843
Suttle Apparatus Corp., 5843

Employment Standards Administration
See also Wage and Hour Division
NOTICES
Minimum wages for Federal and federally-assisted construction; general wage determination decisions, 5841

Energy Department
See Federal Energy Regulatory Commission

Environmental Protection Agency
RULES
Air pollution; standards of performance for new stationary sources:
Residential wood heaters, 5860
Toxic substances:
Testing requirements—
Diethylene glycol butyl ether and diethylene glycol butyl ether acetate, 5932
NOTICES
Committees; establishment, renewal, termination, etc.:
National Air Pollution Control Techniques Advisory Committee, 5828

Environmental statements; availability, etc.:
Agency statements—
Comment availability, 5829
Weekly receipts, 5829
Water pollution control:
Agricultural chemicals in ground water; pesticide strategy; availability, 5830

Equal Employment Opportunity Commission
NOTICES
Meetings; Sunshine Act, 5853

Executive Office of the President
See Presidential Documents

Export Administration
See also International Trade Administration
NOTICES
Export privileges, actions affecting; appeals, etc.:
United Exporters Co., 5811

Federal Aviation Administration
RULES
Airworthiness directives:
Cessna, 5759
Fokker, 5763
Piper, 5763
PROPOSED RULES
Airworthiness directives:
British Aerospace, 5801
NOTICES
Advisory circulars; availability, etc.:
Transport category airplanes—
Airborne windshear warning systems, 5850
Meetings:
Aeronautics Radio Technical Commission, 5851

Federal Deposit Insurance Corporation
NOTICES
Meetings; Sunshine Act, 5853
(2 documents)

Federal Energy Regulatory Commission
NOTICES
Electric rate and corporate regulation filings:
Union Electric Co. et al., 5820
Emergency action plan guidelines; availability, 5822
Hydroelectric applications, 5822
Meetings; Sunshine Act, 5854
(3 documents)
Applications, hearings, determinations, etc.:
Algonquin Gas Transmission Co., 5826
Connecticut et al., 5826
Northwest Pipeline Corp., 5827
Transcontinental Gas Pipe Line Corp., 5827
Transwestern Pipeline Co., 5828

Federal Maritime Commission
RULES
Maritime carriers and related activities in domestic offshore trades and foreign commerce:
Tariff publication of free time and detention charges applicable to carrier equipment interchanged with shippers or their agents, 5770

Federal Reserve System
NOTICES
Meetings; Sunshine Act, 5854
Applications, hearings, determinations, etc.:
Bank Maryland Corp. et al., 5832
Boatner, John A., Jr., 5832
B/W Bancshares, Inc., 5832
Chase Manhattan Corp., 5833
Haviland Bancshares, Inc., 5834

Food and Drug Administration
RULES
GRAS or prior-sanctioned ingredients:
Acacia (gum arabic), 5765
NOTICES
Human drugs:
Current good manufacturing practices—
Investigational new drug products preparation; draft guideline availability, 5835
Meetings:
Consumer information exchange, 5836
Shellfish sanitation and shellfish-growing waters; vibrio vulnificus (bacteria) workshop, 5836

Foreign-Trade Zones Board
NOTICES
Applications, hearings, determinations, etc.:
Illinois—
Diamond-Star Motors Corp., 5812

General Services Administration
PROPOSED RULES
Federal Acquisition Regulation (FAR):
Service Contract Act; labor standards for contracts, 5928
Small business subcontracting plans for contracts with options, 5928

Health and Human Services Department
See also Food and Drug Administration; Public Health Service
NOTICES
Agency information collection activities under OMB review, 5834

Health Resources and Services Administration
See Public Health Service

Immigration and Naturalization Service
RULES
Immigration user fee, 5756

Indian Affairs Bureau
NOTICES
Jurisdiction retrocession:
Ely Indian Colony, NV, 5837

Interior Department
See Indian Affairs Bureau; National Park Service; Reclamation Bureau; Surface Mining Reclamation and Enforcement Office

International Trade Administration
See also Export Administration
NOTICES
Antidumping and countervailing duties proceedings; review procedures, 5813
Meetings:
Caribbean Basin Business Promotion Council, 5814

Interstate Commerce Commission
PROPOSED RULES
Reports:
Railroad annual report (Form R-1)—
Railroad revenue adequacy; consolidation of information, 5807
NOTICES
Motor carriers:
Compensated intercorporate hauling operations, 5839

Justice Department
See Immigration and Naturalization Service

Labor Department
See also Employment and Training Administration; Employment Standards Administration; Mine Safety and Health Administration; Wage and Hour Division
RULES
Contract and property management:
Audit requirements; resolution and appeals, 5966
NOTICES
Agency information collection activities under OMB review, 5840

Mine Safety and Health Administration
NOTICES
Safety standard petitions:
Lamb Construction Co., 5843

National Aeronautics and Space Administration
RULES
Conflict of interests and Freedom of Information Act; implementation:
Uniform fee schedule and administrative guidelines; correction, 5764
PROPOSED RULES
Federal Acquisition Regulation (FAR):
Service Contract Act; labor standards for contracts, 5928
Small business subcontracting plans for contracts with options, 5928

National Oceanic and Atmospheric Administration
RULES
Fishery conservation and management:
Northeast multispecies, 5773
PROPOSED RULES
Fishery conservation and management:
Gulf of Mexico reef fish, 5809
NOTICES
Permits:
Marine mammals, 5814

National Park Service
NOTICES
Boundary establishment, descriptions, etc.:
George Rogers Clark National Historical Park, IN, 5838
Santa Monica Mountains National Recreation Area, CA, 5838
Meetings:
Upper Delaware Citizens Advisory Council, 5838

National Science Foundation
NOTICES
Meetings:
Alan T. Waterman Award Committee, 5845
Graduate Fellowship Program Review Committee, 5844
Physics Advisory Committee, 5844, 5845
(2 documents)

Nuclear Regulatory Commission
NOTICES
Environmental statements; availability, etc.:
Florida Power & Light Co. et al., 5845

Presidential Documents
ADMINISTRATIVE ORDERS
Antigua, U.S. diplomatic missions; nonclosure determination (Presidential Determination No. 88-9 of Feb. 9, 1988), 5749

Public Health Service
See also Food and Drug Administration
NOTICES
Meetings; advisory committees:
March, 5837

Reclamation Bureau
NOTICES
Environmental statements; availability, etc.:
New Melones Water Supply Project, CA, 5837

Saint Lawrence Seaway Development Corporation
NOTICES
Meetings:
Advisory Board, 5851

Securities and Exchange Commission
NOTICES
Self-regulatory organizations; proposed rule changes:
National Association of Securities Dealers, Inc., 5846, 5847
(2 documents)
Applications, hearings, determinations, etc.:
MassMutual Liquid Assets Trust et al., 5848

Surface Mining Reclamation and Enforcement Office
RULES
Permanent program submission:
Missouri, 5766
PROPOSED RULES
Permanent program submission:
Kentucky, 5802
Missouri, 5804

Textile Agreements Implementation Committee
See Committee for the Implementation of Textile Agreements

Transportation Department
See also Federal Aviation Administration; Saint Lawrence Seaway Development Corporation
NOTICES
Aviation proceedings:
Agreements filed; weekly receipts, 5850
Certificates of public convenience and necessity and foreign air carrier permits; weekly applications, 5850
Meetings:
Minority Business Resource Center Advisory Committee, 5850

Treasury Department
NOTICES
Agency information collection activities under OMB review, 5851

Veterans Administration
RULES
Vocational rehabilitation and education:
Veterans education—
Refresher, remedial and deficiency courses; entitlement charges, 5769
PROPOSED RULES
Vocational rehabilitation and education:
Veterans education—
Course withdrawal under mitigating circumstances; clarification, 5806
NOTICES
Meetings:
Commission to Assess Veterans' Education Policy, 5851

Wage and Hour Division
NOTICES
Learners, certificates authorizing employment at special minimum wages, 5844

Separate Parts In This Issue

Part II
Environmental Protection Agency, 5860

Part III
Department of Defense; General Services Administration; National Aeronautics and Space Administration, 5928

Part IV
Environmental Protection Agency, 5932

Part V
Department of Education, 5956

Part VI
Department of Agriculture, Cooperative State Research Service, 5962

Part VII
Department of Labor, 5966

Reader Aids
Additional information, including a list of public laws, telephone numbers, and finding aids, appears in the Reader Aids section at the end of this issue.

CFR PARTS AFFECTED IN THIS ISSUE

A cumulative list of the parts affected this month can be found in the Reader Aids section at the end of this issue.

3 CFR

Administrative Orders:

Presidential Determinations:

No. 88-9 of Feb. 9, 1988 5749

7 CFR

907 5751
910 5752
1260 5752

Proposed Rules:

916 5776
917 5776
1032 5777

8 CFR

286 5756

9 CFR

94 5758

14 CFR

39 (3 documents) 5759-5763
1206 5764
1207 5764

Proposed Rules:

39 5801

21 CFR

184 5765

29 CFR

96 5966

30 CFR

925 5766

Proposed Rules:

917 5802
925 5804

34 CFR

Proposed Rules:

538 5956

38 CFR

21 5769

Proposed Rules:

21 5806

40 CFR

60 5860
795 5932
799 5932

46 CFR

550 5770
580 5770

48 CFR

Proposed Rules:

1 5928
5 5928
19 5928
22 5928
52 (2 documents) 5928

49 CFR

Proposed Rules:

1201 5807

50 CFR

651 5773

Proposed Rules:

641 5809

Federal Register
Vol. 53, No. 38
Friday, February 26, 1988

Presidential Documents

Title 3—

The President

Presidential Determination No. 88–9 of February 9, 1988

Keeping the U.S. Embassy Antigua Open

Memorandum for the Secretary of State

In accordance with Section 123 of the Foreign Relations Authorization Act, Fiscal Years 1988 and 1989 (Public Law 100–204), I have determined that closure of the U.S. Diplomatic and Consular Mission in Antigua and Barbuda is not in the national security interests of the United States.

You are hereby authorized and directed to report this determination to the Congress, as required by law. This determination shall be published in the **Federal Register.**

Ronald Reagan

THE WHITE HOUSE,
Washington, February 9, 1988.

[FR Doc. 88–4269
Filed 2–24–88; 4:22 pm]
Billing code 3195–01–M

Rules and Regulations

Federal Register
Vol. 53, No. 38
Friday, February 26, 1988

This section of the FEDERAL REGISTER contains regulatory documents having general applicability and legal effect, most of which are keyed to and codified in the Code of Federal Regulations, which is published under 50 titles pursuant to 44 U.S.C. 1510.
The Code of Federal Regulations is sold by the Superintendent of Documents. Prices of new books are listed in the first FEDERAL REGISTER issue of each week.

DEPARTMENT OF AGRICULTURE

Agricultural Marketing Service

7 CFR Part 907

[Navel Orange Reg. 674]

Navel Oranges Grown in Arizona and Designated Part of California; Limitation of Handling

AGENCY: Agricultural Marketing Service, USDA.

ACTION: Final rule.

SUMMARY: Regulation 674 establishes the quantity of California-Arizona navel oranges that may be shipped to market during the period February 26 through March 3, 1988. Such action is needed to balance the supply of fresh navel oranges with the demand for such oranges during the period specified due to the marketing situation confronting the orange industry.

DATES: Regulation 674 (§ 907.974) is effective for the period February 26 through March 3, 1988.

FOR FURTHER INFORMATION CONTACT: Raymond C. Martin, Section Head, Volume Control Programs, Marketing Order Administration Branch, F&V, AMS, USDA, Room 2528-S, P.O. Box 96456, Washington, DC 20090-6456; telephone: (202) 447-5120.

SUPPLEMENTARY INFORMATION: This final rule is issued under Marketing Order 907 (7 CFR Part 907), as amended, regulating the handling of navel oranges grown in Arizona and designated part of California. This order is effective under the Agricultural Marketing Agreement Act of 1937, as amended, hereinafter referred to as the Act.

This final rule has been reviewed under Executive Order 12291 and Departmental Regulation 1512-1 and has been determined to be a "non-major" rule under criteria contained therein.

Pursuant to requirements set forth in the Regulatory Flexibility Act (RFA), the Administrator of the Agricultural Marketing Service (AMS) has considered the economic impact of the use of volume regulations on small entities as well as larger ones.

The purpose of the RFA is to fit regulatory actions to the scale of business subject to such actions in order that small businesses will not be unduly or disproportionately burdened. Marketing orders issued pursuant to the Act, and rules issued thereunder, are unique in that they are brought about through group action of essentially small entities acting on their own behalf. Thus, both statutes have small entity orientation and compatibility.

There are approximately 123 handlers of California-Arizona navel oranges subject to regulation under the navel orange marketing order, and approximately 4,065 producers in California and Arizona. Small agricultural producers have been defined by the Small Business Administration (13 CFR 121.2) as those having annual gross revenues for the last three years of less than $500,000, and small agricultural service firms are defined as those whose gross annual receipts are less than $3,500,000. The majority of handlers and producers of California-Arizona navel oranges may be classified as small entities.

This action is consistent with the marketing policy for 1987-88 adopted by the Navel Orange Administrative Committee (Committee). The Committee met publicly on February 23, 1988, in Visalia, California, to consider the current and prospective conditions of supply and demand and, by a 7 to 3 vote, recommended a quantity of navel oranges deemed advisable to be handled during the specified week. The Committee reports that the demand for navel oranges is stable.

Based on consideration of supply and market conditions, and the evaluation of alternatives to the implementation of prorate regulations, the Administrator of the AMS has determined that this final rule will not have a significant economic impact on a substantial number of small entities.

Pursuant to 5 U.S.C. 553, it is further found that it is impracticable, unnecessary, and contrary to the public interest to give preliminary notice and engage in further public procedure with respect to this action and that good cause exists for not postponing the effective date of this action until 30 days after publication in the **Federal Register** because of insufficient time between the date when information became available upon which this regulation is based and the effective date necessary to effectuate the declared policy of the Act. Interested persons were given an opportunity to submit information and views on the regulation at an open meeting. To effectuate the declared purposes of the Act, it is necessary to make this regulatory provision effective as specified, and handlers have been apprised of such provision and the effective time.

List of Subjects in 7 CFR Part 907

Marketing agreements and orders, California, Arizona, Oranges (navel).

For the reasons set forth in the preamble, 7 CFR Part 907 is amended as follows:

PART 907—NAVEL ORANGES GROWN IN ARIZONA AND DESIGNATED PART OF CALIFORNIA

1. The authority citation for 7 CFR Part 907 continues to read as follows:

Authority: Secs. 1-19, 48 Stat. 31, as amended; 7 U.S.C. 601-674.

2. Section 907.974 is added to read as follows: [*This section will not appear in the Code of Federal Regulations.*]

§ 907.974 Navel Orange Regulation 674.

The quantity of navel oranges grown in California and Arizona which may be handled during the period February 26, 1988, through March 3, 1988, are established as follows:

(a) District 1: 1,615,000 cartons;
(b) District 2: 285,000 cartons;
(c) District 3: Unlimited cartons;
(d) District 4: Unlimited cartons.

Dated: February 24, 1988.

Charles R. Brader,

Director, Fruit and Vegetable Division, Agricultural Marketing Service.

[FR Doc. 88-4247 Filed 2-25-88; 8:45 am]

BILLING CODE 3410-02-M

7 CFR Part 910

[Lemon Reg. 602]

Lemons Grown in California and Arizona; Limitation of Handling

AGENCY: Agricultural Marketing Service, USDA.

ACTION: Final rule.

SUMMARY: Regulation 602 establishes the quantity of fresh California-Arizona lemons that may be shipped to market at 335,000 cartons during the period February 28 through March 5, 1988. Such action is needed to balance the supply of fresh lemons with market demand for the period specified, due to the marketing situation confronting the lemon industry.

DATES: Regulation 602 (§ 910.902) is effective for the period February 28 through March 5, 1988.

FOR FURTHER INFORMATION CONTACT: Raymond C. Martin, Section Head, Volume Control Programs, Marketing Order Administration Branch, F&V, AMS, USDA, Room 2523, South Building, P.O. Box 96456, Washington, DC 20090-6456; telephone: (202) 447-5697.

SUPPLEMENTARY INFORMATION: This final rule has been reviewed under Executive Order 12291 and Departmental Regulation 1512-1 and has been determined to be a "non-major" rule under criteria contained therein.

Pursuant to requirements set forth in the Regulatory Flexibility Act (RFA), the Administrator of the Agricultural Marketing Service has determined that this action will not have a significant economic impact on a substantial number of small entities.

The purpose of the RFA is to fit regulatory action to the scale of business subject to such actions in order that small businesses will not be unduly or disproportionately burdened. Marketing orders issued pursuant to the Agricultural Marketing Agreement Act, and rules issued thereunder, are unique in that they are brought about through group action of essentially small entities acting on their own behalf. Thus, both statutes have small entity orientation and compatibility.

This regulation is issued under Marketing Order No. 910, as amended (7 CFR Part 910) regulating the handling of lemons grown in California and Arizona. The order is effective under the Agricultural Marketing Agreement Act (the "Act," 7 U.S.C. 601-674), as amended. This action is based upon the recommendation and information submitted by the Lemon Administrative Committee and upon other available information. It is found that this action will tend to effectuate the declared policy of the Act.

This regulation is consistent with the marketing policy for 1987-88. The committee met publicly on February 23, 1988, in Los Angeles, California, to consider the current and prospective conditions of supply and demand and unanimously recommended a quantity of lemons deemed advisable to be handled during the specified week. The committee reports that the market for lemons is strong.

Pursuant to 5 U.S.C. 553, it is further found that it is impracticable, unnecessary, and contrary to the public interest to give preliminary notice and engage in further public procedure with respect to this action and that good cause exists for not postponing the effective date of this action until 30 days after publication in the **Federal Register** because of insufficient time between the date when information became available upon which this regulation is based and the effective date necessary to effectuate the declared purposes of the Act. Interested persons were given an opportunity to submit information and views on the regulation at an open meeting. It is necessary, in order to effectuate the declared purposes of the Act, to make these regulatory provisions effective as specified, and handlers have been apprised of such provisions and the effective time.

List of Subjects in 7 CFR Part 910

Marketing agreements and orders, California, Arizona, Lemons.

For the reasons set forth in the preamble, 7 CFR Part 910 is amended as follows:

PART 910—LEMONS GROWN IN CALIFORNIA AND ARIZONA

1. The authority citation for 7 CFR Part 910 continues to read as follows:

Authority: Secs. 1-19, 48 Stat. 31, as amended; 7 U.S.C. 601-674.

2. Section 910.902 is revised to read as follows:

[This section will not appear in the Code of Federal Regulations.]

§ 910.902 Lemon Regulation 602.

The quantity of lemons grown in California and Arizona which may be handled during the period February 28, 1988, through March 5, 1988, is established at 335,000 cartons.

Dated: February 24, 1988.

Charles R. Brader,

Director, Fruit and Vegetable Division, Agricultural Marketing Service.

[FR Doc. 88-4246 Filed 2-25-88; 8:45 am]

BILLING CODE 3410-02-M

7 CFR Part 1260

Beef Promotion and Research Order

AGENCY: Agricultural Marketing Service, USDA.

ACTION: Final rule.

SUMMARY: This final rule adopts with some modifications an interim final rule which established regulations to implement the Beef Promotion and Research Order. This final rule (1) identifies those States in which State brand inspectors will collect assessments; (2) clarifies and simplifies the collection and remittance process; (3) establishes a form of certification for exempt transactions; (4) identifies the qualified State beef councils certified by the Cattlemen's Beef Promotion and Research Board; and (5) effectuates the reporting requirements of the Beef Promotion and Research Order.

EFFECTIVE DATE: March 28, 1988.

ADDRESS: Ralph L. Tapp, Chief, Marketing Programs and Procurement Branch, Livestock and Seed Division, Agricultural Marketing Service, USDA, Room 2610-S, P.O. Box 96456, Washington, DC 20090-6456.

FOR FURTHER INFORMATION CONTACT: Ralph L. Tapp, Chief, Marketing Programs and Procurement Branch, (202) 447-2650.

SUPPLEMENTARY INFORMATION: This action has been reviewed under USDA procedures established to implement Executive Order No. 12291 and Departmental Regulation No. 1512-1, and is hereby classified as a nonmajor rule.

This action has also been reviewed under the Regulatory Flexibility Act (RFA) (5 U.S.C. 601 *et seq.*). The Beef Promotion and Research Act of 1985 (Act) (7 U.S.C. 2901 *et seq.*) provides for the establishment of a coordinated program of promotion and research designed to strengthen the beef industry's position in the marketplace and to maintain and expand foreign and domestic markets and uses for beef and beef products. This program is financed by assessments on domestic and imported cattle and on imported beef and beef products. Pursuant to the Act, a Beef Promotion and Research Order was issued and assessments began on October 1, 1986 (51 FR 26132 published on July 18, 1986). The Act and the order require that persons making payments to producers for cattle shall collect assessments from those producers and remit the assessments to the Board or the qualified State beef council, unless a different means of collection and

remittance is provided by regulation. The Act and order also provide that each importer of cattle, beef or beef products shall pay an assessment.

An interim final rule with a request for comments was published October 1, 1986, at 51 FR 35196. One comment was received.

This final rule (1) identifies those States in which State brand inspectors will collect assessments; (2) clarifies and simplifies the collection and remittance process; (3) establishes a form of certification for exempt transactions; (4) identifies qualified State beef councils certified by the Cattlemen's Beef Promotion and Research Board; and (5) effectuates the reporting requirements of the order. The interim rule is adopted with some modifications.

The effect of the order upon small entities was discussed in the July 18, 1986, issue of the **Federal Register** (51 FR 26132) and it was determined that the order would not have a significant effect on a substantial number of small entities. This rule merely implements the order provisions in the manner provided for therein. Accordingly, the Administrator of AMS has determined that this rule will not have a significant economic impact on a substantial number of small entities.

Paperwork Reduction

The Paperwork Reduction Act of 1980 (Title 44, U.S.C. Chapter 35) seeks to minimize the paperwork burden imposed by the Federal Government while maximizing the utility of the information requested. The information collection request in this Part has been approved by OMB and has been assigned Control No. 0581–0152.

Background

The Beef Promotion and Research Act of 1985 (7 U.S.C. 2901 *et seq.*), (Subtitle A, of the Food Security Act of 1985), authorizes the establishment of a national beef promotion and research program. The program is funded by an assessment of one dollar ($1) per head of cattle sold in the United States, and an equivalent assessment on imported cattle, beef, and beef products.

The final order establishing a beef promotion and research program was published in the July 18, 1986, issue of the **Federal Register.** The order requires that collecting persons remit assessments to qualified State beef councils or to the Board if the State does not have a qualified State beef council. The order further provides that producers participating in such qualified State beef promotion and research programs shall be entitled to a credit of up to 50 cent per head for participating in such a program. At its initial meeting, the Board reviewed 40 applications from State beef promotion entities and certified as qualified all 40 State beef promotion entities pursuant to § 1260.181 of the order. These qualified State beef councils are listed in § 1260.315 of these regulations. The addresses of the qualified State beef councils were published in a separate notice in the **Federal Register** on October 16, 1986, at 51 FR 36833 and will be updated from time to time as necessary. However, § 1260.315 is amended to add the name of the Vermont Beef Council to the list of qualified State beef councils. The Vermont Beef Council address is 116 State Street, Montpelier, Vermont 05602. Additionally, the addresses of qualified State beef councils may be obtained from the Board. In the 9 States which do not have qualified State beef councils, collecting persons in those States are required by the order to remit the assessments to the Board.

During its meeting the Board also considered and recommended the adoption of regulations to implement the collection of assessments pursuant to the order.

The order provides that the collecting person shall be the person making payment to a producer for cattle, or any other person who is made responsible for collecting and remitting assessments by regulations prescribed by the Board and approved by the Secretary. There are marketing situations in which the collection and remittance process would be facilitated by using the collection mechanism of existing State programs. Accordingly, it has been determined that the use of brand inspectors in those States and parts of States where brand inspectors are authorized by State law to collect assessments under existing State beef promotion and research programs would be an appropriate and expeditious means of collecting and remitting assessments. These regulations authorize the brand inspectors in the States listed herein to serve as the collecting person for assessments due under the order.

Another marketing situation addressed by the Board involved deliveries on futures contracts. In these transactions there are several persons who could be considered as making payment to the producer within the meaning of the order. It has been determined that the collection and remittance process would be most effective and efficient if the commission firm or market agency representing the seller in the delivery were made the collecting person. Such persons are involved in and should be familiar with the collection procedure.

The Board also recommended a clarification of § 1260.172(a)(2) of the order, which specifies that "any producer marketing cattle of that producer's own production in the form of beef or beef products to consumers, either directly or through retail or wholesale outlets, or for export purposes, shall remit to a qualified State beef council or to the Board an assessment on such cattle at the rate of one dollar ($1) per head of cattle or the equivalent thereof." Although § 1260.172(a)(2) does not specify when the assessment was due, § 1260.311(b) as adopted herein, states that the obligation to remit assessments on such cattle shall attach upon the slaughter of the cattle and that the assessment shall be remitted not later than the 15th day of the following month. Therefore, no further clarification of § 1260.172(a)(2) is necessary.

Section 1260.172 of the order provides that collecting persons shall remit assessments to the qualified State beef councils in the State where the cattle originated prior to sale, or to the Board if there is no qualified State beef council in that State, unless the Board recommends and the Secretary approves a modification of that process. The Board has recommended that collecting persons be required to remit assessments to the qualified State beef council in the State in which the collecting person resides or to the Board if the collecting person resides in a State which does not have a qualified State beef council. This method of handling assessment remittance is preferable because such qualified State beef councils are in a better position to ensure effective coordination and distribution of assessments to the appropriate qualified State beef council. Accordingly, it has been determined that collecting persons will be required to remit assessments to the council of the State within which they reside and will not be required to remit assessments separately to each State in which the cattle originated prior to sale. If there is not a qualified State beef council in the State where the collecting person resides, remittance shall be made to the Board.

The Board also recommended the form of the certification which must be used to claim that a transaction is exempt from an assessment under the order because ownership of such cattle was acquired merely to facilitate the transfer of such ownership to a third party. This certification relieves the person who would otherwise be

required to collect an assessment of the responsibility for collecting the assessment and would provide documentary evidence that an assessment is not due for such a transaction.

Comments

The interim final rule provided a period of 30 days for comments. One comment was received from an association representing livestock markets.

The commentor suggested that § 1260.314 "Certification of non-producer status for certain transactions" be modified. This section provides that assessments will not be levied on sales of cattle if the owners certify (1) that their only share in the proceeds of the sale is a sales commission, handling fee or other service fee, or (2) that they acquired ownership to facilitate the transfer of ownership to a third party and that the resale occurred within 10 days. The commentor suggested that persons who sell cattle on commission should not be required to complete a certificate of exemption.

Auction markets and commission firms which sell cattle on commission without taking ownership of the cattle are not required by § 1260.314 to complete certification of non-producer status forms for such transactions. However, the section does require persons who buy cattle and resell them on a commission basis (for example, order buyers) to make the certification in order to be eligible for exemption from assessment on such transactions. This certification is necessary for the effective enforcement and administration of the Act and order because the documents which are provided to buyers in the geneal course of business may not always reveal whether the seller is receiving only a sales commission, handling fee, or other service fee. Without the certification, buyers in such transactions could not be certain whether they would be required to collect an assessment. The certification will help the Board to determine whether a buyer should have collected an assessment on a particular transaction. Accordingly, the suggested change has not been adopted.

This final rule adopts with some modifications the provisions of the interim final rule. Such changes are nonsubstantive and include changes to provide for gender neutral language and for clarity.

List of Subjects in 7 CFR Part 1260

Administrative practice and procedure, Marketing agreements, Meat and meat products, Beef and beef products.

Accordingly, the interim final rule amending 7 CFR Part 1260 which was published at 51 FR 35197 on October 1, 1986, is adopted as a final rule with the following changes:

PART 1260—BEEF PROMOTION AND RESEARCH

1. The authority citation for Part 1260 continues to read as follows:

Authority: 7 U.S.C. 2901 *et seq.*

2. Subpart B is revised to read as follows:

Subpart B—Rules and Regulations

Sec.
1260.301 Terms defined.
1260.310 Domestic assessments.
1260.311 Collecting persons for purposes of collection of assessments.
1260.312 Remittance to the Cattlemen's Board or Qualified State Beef Council.
1260.313 Document evidencing payment of assessments.
1260.314 Certification of non-producer status for certain transactions.
1260.315 Qualified State Beef Councils.
1260.316 Paperwork Reduction Act assigned number.

Subpart B—Rules and Regulations

§ 1260.301 Terms defined.

As used throughout this subpart, unless the context otherwise requires, terms shall have the same meaning as the definition of such terms as appears in Subpart A of this Part.

§ 1260.310 Domestic assessments.

(a) A $1.00 per head assessment on cattle sold shall be paid by the producer of the cattle in the manner designated in § 1260.311.

(b) If more than one producer shares the proceeds received for the cattle sold, each such producer is obligated to pay that portion of the assessments which are equivalent to the producer's proportionate share of the proceeds.

(c) Failure of the collecting person to collect the assessment on each head of cattle sold as designated in § 1260.311 shall not relieve the producer of his obligation to pay the assessment to the appropriate qualified State beef council or the Cattlemen's Board as required in § 1260.312.

§ 1260.311 Collecting persons for purposes of collection of assessments.

Collecting persons for purposes of collecting and remitting the $1.00 per head assessment shall be:

(a) Except as provided in paragraph (b) and (c) of this section, each person making payment to a producer for cattle purchased in the United States shall collect from the producer an assessment at the rate of $1.00 per head of cattle purchased and shall be responsible for remitting assessments to the qualified State beef council or the Cattlemen's Board as provided in § 1260.312. The collecting person shall collect the assessment at the time the collecting person makes payment or any credit to the producer's account for the cattle purchased. The person paying the producer shall give the producer a receipt indicating payment of the assessment.

(b) Any producer marketing cattle of that producer's own production in the form of beef or beef products to consumers, either directly or through retail or wholesale outlets, shall be responsible for remitting to the qualified State beef council or the Cattlemen's Board pursuant to § 1260.312, an assessment on such cattle at the rate of $1.00 per head of cattle or the equivalent thereof. The obligation to remit the assessment shall attach upon slaughter of the cattle, and the producer responsible for remitting the assessment shall remit the assessment in the manner provided in § 1260.312. For the purposes of this subpart, a producer marketing cattle of the producer's own production in the form of beef or beef products shall be considered a collecting person.

(c) In the States listed below there exists a requirement that cattle be brand inspected by State authorized inspectors prior to sale. In addition, when cattle are sold in the sales transactions listed below in those States, these State authorized inspectors are authorized to, and shall, collect assessments due as a result of the sale of cattle. In those transactions in which inspectors are responsible for collecting assessments, the person paying the producer shall not be responsible for the collection and remittance of such assessments. The following chart identifies the party responsible for collecting and remitting assessments in these States:

State	Sales through auction market	Sales to a slaughter/packet	Sales to a feedlot	Sales to an order buyer/ dealer	Country sales[1]
Arizona	CP	CP	CP	B	B
California	CP	CP	B	B-CP	B
Colorado	CP	B	B	B	B
Idaho	CP	CP	B	B	B
Montana	CP	B	B	B	B
Nebraska	CP	CP	B-CP	B-CP	B-CP
Oregon	CP	B-CP	B	B	B
New Mexico	CP	B-CP	B-CP	B-CP	B-CP
Utah	CP	B-CP	B	B	B
Washington	CP	CP	B	B-CP	B
Wyoming	CP	B	B	B	B

Key:
B—Brand inspector has responsibility to collect and remit assessments due.
CP—The person paying the producer shall be the collecting person and has responsibility to collect and remit the assessments due.
B-CP—Brand inspector has responsibility to collect; however, when there has not been a physical brand inspection the person paying the producer shall be the collecting person and has the responsibility to collect and remit assessments due.
[1] For the purpose of this subpart, the tgerm "country sales" shall include any sales not conducted at an auction or livestock market and which is not a sale to a slaughter/packer, feedlot or an order buyer or dealer.

(d) For cattle delivered on futures contracts, the commission firm or the market agency representing the seller in the delivery of cattle shall be the collecting person.

(e) In a case where a producer sells cattle as part of a custom slaughter operation, the producer shall be the collecting person in the same manner as if the cattle were slaughtered for sale.

§ 1260.312 Remittance to the Cattlemen's Board or Qualified State Beef Council.

Each person responsible for the collection and remittance of assessments shall transmit assessments and a report of assessments to the qualified State beef council of the State in which such person resides or if there is no qualified State beef council in such State, then to the Cattlemen's Board as follows:

(a) *Reports.* Each collecting person shall make reports on forms made available or approved by the Cattlemen's Board. Each collecting person shall prepare a separate report for each reporting period. Each report shall be mailed to the qualified State beef council of the State in which the collecting person resides, or its designee, or if there exists no qualified State beef council in such State, to the Cattlemen's Board. Each report shall contain the following information:

(1) The number of cattle purchased, initially transferred or which, in any other manner, is subject to the collection of assessment, and the dates of such transactions;

(2) The amount of assessment remitted;

(3) The basis, if necessary, to show why the remittance is less than the number of head of cattle multiplied by one dollar; and

(4) The date any assessment was paid.

(b) *Reporting periods.* Each calendar month shall be a reporting period and the period shall end at the close of business on the last business day of the month.

(c) *Remittances.* The remitting person shall remit all assessments to the qualified State beef council or its designee, or, if there is no qualified State beef council, to the Cattlemen's Board at P.O. Box 27-275; Kansas City, Missouri 64180-0001, with the report required in paragraph (a) of this section not later than the 15th day of the following month. All remittances sent to a qualified State beef council or the Cattlemen's Board by the remitting persons shall be by check or money order payable to the order of the qualified State beef council or the Cattlemen's Board. All remittances shall be received subject to collection and payment at par.

§ 1260.313 Document evidencing payment of assessments.

Each collecting person responsible for remitting an assessment to a qualified State beef council or the Board, other than a producer slaughtering cattle of the producer's own production for sale, is required to give the producer from whom the collecting person collected an assessment written evidence of payment of the Beef Promotion and Research Assessments. Such written evidence serving as a receipt shall contain the following information:

(a) Name and address of the collecting person.

(b) Name of producer who paid assessment.

(c) Number of head of cattle sold.

(d) Total assessments paid by the producer.

(e) Date.

§ 1260.314 Certification of non-producer status for certain transactions.

(a) The assessment levied on each head of cattle sold shall not apply to cattle owned by a person:

(1) If the person certifies that the person's only share in the proceeds of a sale of cattle, beef, or beef products is a sales commission, handling fee or other service fee; or

(2) If the person:

(i) Certifies that the person acquired ownership of cattle to facilitate the transfer of ownership of such cattle from the seller to a third party,

(ii) Establishes that such cattle were resold not later than 10 days from the date on which the person acquired ownership; and

(iii) Certifies that the assessment levied upon the person from whom the person purchased the cattle, if an assessment was due, has been collected and has been remitted, or will be remitted in a timely fashion.

(b) Each person seeking non-producer status pursuant to § 1260.116 of this part shall provide the collecting person with a Statement of Certification of Non-Producer Status on a form approved by the Board and the Secretary.

(c) A copy of the Statement of Certification of Non-Producer Status shall be forwarded, upon request, by the collecting person to the qualified State beef council or the Cattlemen's Board.

§ 1260.315 Qualified State Beef Councils.

The following State beef promotion entities have been certified by the Board as qualified State beef councils:

Alabama Cattlemen's Association
Arizona Beef Council
Arkansas Beef Council
California Beef Council
Colorado Beef Council
Florida Beef Council, Inc.
Georgia Beef Board, Inc.
Idaho Beef Council
Illinois Beef Council
Indiana Beef Council
Iowa Beef Cattle Producers Association
Kansas Beef Council

Kentucky Beef Cattle Association
Lousiana Beef Industry Council
Maryland Beef Council
Michigan Beef Industry Commission
Minnesota Beef Council
Mississippi Cattle Industry Board
Missouri Beef Industry Council
Montana Beef Council
Nebraska Beef Industry Development Board
Nevada Beef Council
New Mexico Beef Council
New York Beef Industry Council
North Carolina Cattlemen's Association
North Dakota Beef Commission
Ohio Beef Council
Oklahoma Beef Commission
Oregon Beef Council
Pennsylvania Beef Council, Inc.
South Carolina Cattle and Beef Board
South Dakota Beef Industry Council
Tennessee Beef Industry Council
Texas Beef Industry Council
Utah Beef Council
Vermont Beef Council
Virginia Cattle Industry Board
Washington State Beef Commission
West Virginia Beef Industry
Wisconsin Beef Council
Wyoming Beef Council

§ 1260.316 Paperwork Reduction Act assigned number.

The information collection and recordkeeping requirements contained in this Part have been approved by the Office of Management and Budget (OMB) under the provisions of 44 U.S.C. Chapter 35 and have been assigned OMB control number 0851-0152.

Done at Washington, DC, on February 22, 1988.

James P. Boyle,

Administrator, Agricultural Marketing Service.

[FR Doc. 88-4069 Filed 2-25-88; 8:45 am]

BILLING CODE 3410-02-M

DEPARTMENT OF JUSTICE

Immigration and Naturalization Service

8 CFR Part 286

[INS No. 1028-88]

Immigration User Fee

AGENCY: Immigration and Naturalization Service, Justice.

ACTION: Final rule.

SUMMARY: This final rule adds a new Part 286 to implement the provisions of section 205 of the Department of Justice Appropriation Act, 1987 (Pub. L. 99-591; enacted October 30, 1986) establishing an immigration user fee.

EFFECTIVE DATE: March 28, 1988.

FOR FURTHER INFORMATION CONTACT: Charles S. Thomason, Jr., Systems Accountant, Finance Branch, Immigration and Naturalization Service, 425 I Street NW., Washington, DC 20536; (202) 633-4705.

SUPPLEMENTARY INFORMATION: The Immigration and Naturalization Service (Service) published a proposed rule on August 12, 1987, at 52 FR 29863, to add a new Part 286 in order to implement the provisions of section 205 of the Department of Justice Appropriation Act, 1987, which authorizes the charging and collection of an immigration user fee to be paid by passengers (with certain exceptions) arriving in the United States by commercial aircraft or commercial vessel. The comment period ended on October 13, 1987. A total of 12 comments were received during the comment period and considered before preparing this final rule. The following summary addresses the substantive comments.

1. Certain commenters raised concerns about the inclusion of Guam and the U.S. Virgin Islands in the definition of "port of entry" and urged that those locations be deleted to be consistent with the collection of a user fee by the U.S. Customs Service. Both locations are part of the United States as defined in section 101(a)(38) of the Immigration and Nationality Act of 1952, as amended, (Act). The definition section has been revised to clarify the geographical applicability of the immigration user fee.

2. Commenters, also, raised concerns about the definition of "originated", especially with regard to cruise itineraries that commence in excepted locations but include one or more non-excepted locations before returning to the excepted location. The final rule has been revised to indicate that any travel which includes a non-excepted location requires collection of the immigration user fee. The intent of the statute is that a passenger who travels from a non-excepted location shall pay the immigration user fee.

3. Some commenters assert that the exceptions set forth in § 286.3 are unclear. That section has been revised to clarify the exceptions, and the definitions in § 286.1 have been revised, as indicated above, to clarify the geographical applicability of the immigration user fee.

4. Numerous commenters expressed concern about the responsibility for collection of the immigration user fee upon departure of a passenger, especially in the case of refusal by a passenger to pay or when a tour wholesaler is involved. The statute and proposed rule indicate that it is the responsibility of the departing carrier to collect any immigration user fee which was not collected at the time of issuance of a ticket or document for transportation. Any refusal to pay should immediately be brought to the attention of the Service.

5. One commenter requested that the regulations include guidance on the method of indicating collection of the immigration user fee on the tickets or documents for transportation. Such guidance has been included in a revised § 286.4. Section 286.4 in the proposed rule has been deleted.

6. Some commenters expressed concern that § 286.6 does not reflect the elimination of certain expense responsibilities of carriers nor the extent of the provision of inspection services. Section 286.6 has been deleted. This rule addresses the assessment, collection, and remittance of the immigration user fee, not inspection services or other expenses addressed in the statute. The provision of inspection services and other expenses are the subject of other sections of the regulations, which will be amended, if necessary.

7. Numerous commenters expressed concern about the reporting and audit requirements regarding: (a) Numbers of tickets or documents for transportation issued without collection of the immigration user fee; (b) submission of certified assurance statements; (c) independent audits by the Attorney General; and (d) information on contracts with foreign-based tour wholesalers. The reporting of ticket or document for transportation issuance without collection of the immigration user fee and § 286.8 of the proposed rule regarding information on contracts with foreign-based tour wholesalers have been deleted. The provisions regarding the submission of certified assurance statements have been revised. The intent of these provisions is to satisfy the need for independent review of compliance without imposing an undue burden upon the collectors and remitters of the immigration user fee. Independent audits by the Service of collectors and remitters would be based on failures to submit required certified statements or reports or other information indicating non-compliance with the applicable statutes or regulations.

8. Various commenters raised concerns about § 286.11 of the proposed rule which provided for the transfer to the General Fund of the U.S. Treasury of any balance remaining in the Immigration User Fee Account at the

end of each two-year period. Section 286.11 has been deleted.

As a result of the deletion of §§ 286.4, 286.6, 286.8, and 286.11 in the proposed rule, the sections in this final rule have been renumbered.

In compliance with 5 U.S.C. 605(b), the Commissioner of Immigration and Naturalization Service certifies that this rule will not have a significant economic impact on a substantial number of small entities. This rule is not a major rule within the meaning of section 1(b) of Executive Order 12291.

The information collection requirements contained in this final rule have been approved by the Office of Management and Budget, pursuant to the provisions of the Paperwork Reduction Act, under Control Number 1115-0142.

List of Subjects in 8 CFR Part 286

Aircraft, Immigration, Reporting and recordkeeping requirements, Vessels.

Accordingly, Chapter I of Title 8 of the Code of Federal Regulations is amended as follows:

Part 286 is added to read as follows:

PART 286—IMMIGRATION USER FEE

Sec.
286.1 Definitions.
286.2 Fee for arrival of passengers aboard commercial aircraft or commercial vessels.
286.3 Exceptions.
286.4 Fee collection responsibility.
286.5 Remittance and statement procedures.
286.6 Maintenance of records.
286.7 Penalties.

Authority: 8 U.S.C. 1103, 1356.

§ 286.1 Definitions.

The following definitions apply to the following terms in this part:

(a) The term "adjacent islands" means Anguilla, Antigua, Aruba, Bahamas, Barbados, Barbuda, Bermuda, Bonaire, British Virgin Islands, Cayman Islands, Cuba, Curacao, Dominica, the Dominican Republic, Grenada, Guadeloupe, Haiti, Jamaica, Marie-Galante, Martinique, Miquelon, Montserrat, Saba, Saint Barthélemy, Saint Christopher, Saint Eustatius, Saint Kitts-Nevis, Saint Lucia, Saint Maarten, Saint Martin, Saint Pierre, Saint Vincent and Grenadines, Trinidad and Tobago, Turks and Caicos Islands, and other British, French and Netherlands territory or possessions bordering on the Caribbean Sea.

(b) The term "collector" means an air or sea carrier, travel agent, tour wholesaler, or other entity which collects, but may or may not be required to remit, fees pursuant to this part.

(c) The term "commercial aircraft" means any civilian aircraft being used to transport persons or property for compensation or hire.

(d) The term "commercial vessel" means any civilian vessel being used to transport persons or property for compensation or hire.

(e) The term "Comptroller" means the Office of the Comptroller, Immigration and Naturalization Service, Room 6307, 425 I Street NW., Washington, DC 20536.

(f) The term "fee" means the immigration user fee.

(g) The term "port of entry" means a port or place designated by the Commissioner at which a person may apply for admission into the United States.

(h) The term "remitter" means an air or sea carrier, travel agent, tour wholesaler, or other entity which collects, including receipt of fees collected by collectors which are not required to remit fees, and remits fees pursuant to this part.

(i) The term "territories or possessions of the United States" means American Samoa, Baker Island, Howland Island, Jarvis Island, Johnston Atoll, Kingman Reef, Midway, the Northern Mariana Islands, Swains Island, Palmyra Island, and Wake Island.

(j) The term "document for transportation" means any document accepted by a carrier in return for transportation.

(k) The term "United States", when used in a geographical sense, means the continental United States, Alaska, Hawaii, Puerto Rico, Guam, and the Virgin Islands of the United States.

§ 286.2 Fee for arrival of passengers aboard commercial aircraft or commercial vessels.

Under the provisions of section 286(b) of the Act a $5.00 fee per individual is charged and collected by the Commissioner for the immigration inspection of each passenger aboard a commercial aircraft or commercial vessel, arriving at a port of entry in the United States, or for the preinspection of a passenger in a place outside the United States prior to such arrival, except as provided in § 286.3 of this part.

§ 286.3 Exceptions.

The fee set forth in § 286.2 of this part shall not be charged or collected from passengers who fall within any one of the following categories:

(a) Persons whose travel is limited to Canada, Mexico, the United States, adjacent islands, and territories or possessions of the United States;

(b) Persons directly connected with the operation, navigation, or business of the commercial aircraft or commercial vessel including working crew, deadheading crew, U.S. Federal Aviation Administration inspectors, sky marshals, and commercial airline or commercial vessel employees on official business;

(c) Persons who are listed as foreign diplomats on the accreditation list maintained by the U.S. Department of State or who are in possession of a diplomatic visa (A-1 and 2, G-1 thru 4) valid for entry into the United States;

(d) Persons who are passengers on any commercial aircraft or commercial vessel owned or operated exclusively by the Government of the United States or a foreign government, including any agency or political subdivision thereof, so long as that aircraft or vessel is not transporting any persons or property for commercial purposes.

(e) Persons who are passengers on commercial aircraft or commercial vessels under contract to the U.S. Department of Defense, if they have been preinspected outside of the United States under a joint Service and U.S. Department of Defense military inspection program;

(f) Persons arriving on an aircraft or vessel due to an emergency or forced landing when the original destination of the aircraft or vessel was not the United States; and

(g) Persons transiting the United States who are not inspected by the Service. Transit without visa passengers who are inspected by the Service are not excepted from payment of the fee under this section.

§ 286.4 Fee collection responsibility.

(a) It is the responsibility of the air or sea carriers, travel agents, tour wholesalers, or other parties, which issue tickets or documents for transportation on or after December 1, 1986, to collect the fee set forth in § 286.2 of this part from all passengers transported to the United States who are not excepted under § 286.3 of this part.

(b) Tickets and documents for transportation shall be marked by the collector of the fee to indicate that the required fee has been collected. Such markings shall be in accordance with the procedures set forth in the ARC Industry Agents Handbook, the SATO Ticketing Handbook, or compatible procedures set forth in the operations manual of individual collectors.

(c) It is the responsibility of the carrier transporting a passenger from the United States to collect the fee upon departure, if the passenger was not excepted under § 286.3 of this part and tickets or documents for transportation of the passenger do not reflect collection

of the fee at the time of issuance. If at the time of departure such a passenger refuses to pay the fee, the carrier shall record the full name, complete address, nationality, passport number, and alien file number, if any, of the passenger and immediately notify the Comptroller.

§ 286.5 Remittance and statement procedures.

(a) The air or sea carrier whose ticket stock or document for transportation reflects collection of the fee is responsible for remittance of the fee to the Service. The travel agent, tour wholesaler, or other entity, which issues their own non-carrier related ticket or document for transportation to an air or sea passenger who is not excepted from the fee pursuant to § 286.3 of this part, is responsible for remittance of the fee to the Service, unless by contract the carrier will remit the fee.

(b) Fees shall be remitted to the Immigration User Fee Account, Department of the Treasury, by transmission in the Treasury Financial Communication System, using Agency Location Code (ALC) 15 12 0003, for receipt no later than 31 days after the close of the calendar quarter in which the fees are collected. Late payments will be subject to interest, penalty, and handling charges as provided in the Debt Collection Act of 1982 (31 U.S.C. 3717). Refunds by a remitter of fees collected in conjunction with unused tickets or documents for transportation should be netted against the next subsequent remittance.

(c) Concurrent with transmission of a remittance, as set forth in paragraph (b) of this section, each remitter making such remittance shall mail a written statement to the Comptroller which sets forth the following:

(1) Name and address;

(2) Taxpayer identification number;

(3) Calendar quarter covered by the payment; and

(4) Amount collected and remitted.

(d) If a remitter is unable to make a remittance by transmission as set forth in paragraph (b) of this section, remittance with a statement as set forth in paragraph (c) of this section must be made by check or money order payable in U.S. dollars, through a U.S. bank, to "Comptroller, INS", and mailed to the Comptroller for receipt no later than thirty-one (31) days after the close of the calendar quarter in which the fees are collected.

(e) Annually, each U.S. based remitter, which retains an independent accountant and which remits $10,000 or more in fees in any one calendar quarter, shall submit to the Comptroller a report from the independent accountant in accordance with the *Statement on Auditing Standards for Attestation Engagements* on the application of Passenger User Fee Collection and Remittance Procedures established by the American Institute of Certified Public Accountants and the Service, to the Comptroller. Each foreign-based remitter, which retains an independent accountant and which remits $10,000 or more in fees in any one calendar quarter, shall submit a similar report to the Comptroller from the independent accountant in accordance with generally accepted accounting principles of their respective countries. These reports from the independent accountants are to be submitted for receipt by the Comptroller no later than ninety (90) days after the close of the fiscal year of each remitter. Each remitter, which does not retain an independent accountant or which does not remit $10,000 or more in any one calendar quarter, shall certify under oath on each statement submitted pursuant to paragraph (c) of this section that they have complied with the applicable statutes and regulations.

(f) The Commissioner reserves the right to conduct an independent audit of any collector or remitter not providing the report or certification required pursuant to paragraph (e) of this section or based upon other information indicating non-compliance in order to assure the accuracy of the remittances of fees collected and remitted and compliance with the applicable statutes and regulations.

(g) In order to enforce compliance with the provisions of this part, the Commissioner may issue a subpoena requiring the production of records, evidence, and witnesses pursuant to the procedures set forth in § 287.4 of this chapter. The authority to issue a subpoena pursuant to this section is limited to the Commissioner, Deputy Commissioner, Associate Commissioner for Management, Director for Program Inspection, all Regional Commissioners; and all District Directors.

§ 286.6 Maintenance of records.

Each collector and remitter shall maintain records necessary for the Service to verify the accuracy of fees collected and remitted and to otherwise determine compliance with the applicable statutes and regulations. Such records shall be maintained for a period of two years from the date of fee collection. Each remitter shall advise the Comptroller of the name, address, and telephone number of a responsible officer who shall have the authority to verify and produce any records required to be maintained under this part. The Comptroller shall be promptly notified of any changes of the responsible officer.

§ 286.7 Penalties.

Failure of any air or sea carrier to comply with the provisions of section 286 of the Act and this part shall subject it to one or more of the following:

(a) Termination of existing agreements under the provisions of section 238 of the Act; and

(b) Suspension of enroute inspections or preinspections.

Dated: February 9, 1988.

Alan C. Nelson,

Commissioner, Immigration and Naturalization Service.

[FR Doc. 88-4088 Filed 2-25-88; 8:45 am]

BILLING CODE 4410-10-M

DEPARTMENT OF AGRICULTURE

Animal and Plant Health Inspection Service

9 CFR Part 94

[Docket No. 87-147]

Importation of Eviscerated Wild Pheasant and Grouse Carcasses

AGENCY: Animal and Plant Health Inspection Service, USDA.

ACTION: Final rule.

SUMMARY: We are revising the regulations on importing the carcasses of wild pheasants and wild grouse to permit them to be imported under the same conditions as the carcasses of other game birds. Also, to reflect the general understanding of game, we are including wild pheasants and grouse in the definition of "game birds" and removing them from the definition of "poultry." We are also clarifying the requirements for importing carcasses of "game birds." This amendment will benefit those who hunt wild pheasants or wild grouse by making it unnecessary to cook those carcasses, if eviscerated, with heads and feet removed, before bringing them into the United States.

EFFECTIVE DATE: March 28, 1988.

FOR FURTHER INFORMATION CONTACT: Dr. Richard Bowen, Senior Staff Veterinarian, Import-Export and Emergency Planning Staff, VS, APHIS, USDA, Room 809, Federal Building, 6505 Belcrest Road, Hyattsville, MD 20782, 301-436-8499.

SUPPLEMENTARY INFORMATION:

Background

The regulations in 9 CFR Part 94 (referred to below as the regulations) restrict the importation of carcasses of all birds, including poultry and game birds, into the United States. These regulations are intended to prevent viscerotropic velogenic Newcastle disease (VVND) and other diseases from spreading into this country.

We published in the **Federal Register** on August 14, 1987 (52 FR 30373–30374, Docket Number 86–124), a proposal to relieve import restrictions on eviscerated carcasses of wild pheasants and grouse, from which heads and feet have been removed. We also proposed to revise the definition of "game birds" in § 94.6, to include wild pheasants and grouse, and clarify the requirements for importing carcasses of game birds.

Our proposal invited the submission of written comments, which were required to be postmarked or received on or before October 13, 1987. We received 84 comments, all of which supported the proposed rule as published. Based on the rationale set forth in the proposal, we are adopting the proposed rule as a final rule.

Executive Order 12291 and Regulatory Flexibility Act

We are issuing this rule in conformance with Executive Order 12291, and we have determined that it is not a "major rule." Based on information compiled by the Department, we have determined that this rule have an effect on the economy of less than $100 million; will not cause a major increase in costs or prices for consumers, individual industries, federal, state, or local government agencies, or geographic regions; will not cause a significant adverse effect on competition, employment, investment, productivity, innovation, or on the ability of United States-based enterprises to compete with foreign-based enterprises in domestic or export markets.

About 300 to 400 U.S. hunters annually import non-migratory game birds into the United States. This amendment will benefit those who hunt wild pheasants or wild grouse by making it unnecessary to cook those carcasses before bringing them into the United States.

Under these circumstances, the Administrator of the Animal and Plant Health Inspection Service had determined that this action will not have a significant economic impact on a substantial number of small entities.

Paperwork Reduction Act

This final rule contains no information collection or recordkeeping requirements under the Paperwork Reduction Act of 1980 (44 U.S.C. 3501 *et seq.*).

Executive Order 12372

This program/activity is listed in the Category of Federal Domestic Assistance under No. 10.025 and is subject to the provisions of Executive Order 12372, which requires intergovernmental consultation with state and local officials. (See 7 CFR Part 3015, Subpart V.)

List of Subjects in 9 CFR Part 94

African swine fever, Animal diseases, Exotic Newcastle disease, Foot-and-mouth disease, Fowl pest, Garbage, Hog cholera, Imports, Livestock and livestock products, Meat and meat products, Milk, Poultry and poultry products, Rinderpest, Swine vesicular disease.

Accordingly, 9 CFR Part 94 is amended as follows:

PART 94—RINDERPEST, FOOT-AND-MOUTH DISEASE, FOWL PEST (FOWL PLAGUE), NEWCASTLE DISEASE (AVIAN PNEUMOENCEPHALITIS), AFRICAN SWINE FEVER, AND HOG CHOLERA; PROHIBITED AND RESTRICTED IMPORTATIONS

1. The authority citation for Part 94 continues to read as follows:

Authority: 7 U.S.C. 147a, 150ee, 161, 162, 450; 19 U.S.C. 1306; 21 U.S.C. 111, 114a, 134a, 134b, 134c, and 134f; 42 U.S.C. 4331, 4332; 7 CFR 2.17, 2.51, and 371.2(d).

§ 94.6 [Amended]

2. In § 94.6, paragraphs (b)(2) and (b)(4) are revised to read as follows:

* * * * *

(b) * * *

(2) *Poultry.* Chickens, turkeys, swans, partridges, guinea fowl, pea fowl; non-migratory ducks, geese, pigeons, and doves; commercial, domestic, or pen-raised grouse, pheasants, and quail.

* * * * *

(4) *Game birds.* Migratory birds including certain ducks, geese, pigeons, and doves ("migratory" refers to seasonal flight to and from the United States); free-flying quail, wild grouse, wild pheasants (as opposed to those that are commercial, domestic, or pen-raised).

3. In § 94.6, paragraph (d)(1) is revised to read as follows:

* * * * *

(d) * * *

(1) Carcasses of game birds may be imported if eviscerated, with heads and feet removed. Viscera, heads, and feet removed from game birds are ineligible for entry into the United States.

* * * * *

Done in Washington, DC, this 23rd day of February, 1988.

James W. Glosser,

Acting Administrator, Animal and Plant Health Inspection Service.

[FR Doc. 88–4176 Filed 2–25–88; 8:45 am]

BILLING CODE 3410-34-M

DEPARTMENT OF TRANSPORTATION

Federal Aviation Administration

14 CFR Part 39

[Docket No. 86-CE-71-AD; Amdt. 39-5863]

Airworthiness Directives; Cessna Models 150, A150, F150, FA150, FRA150, 152, F152, FA152, A152, 170, 172, F172, FR172, P172, FP172, R172, 172RG, 175, 177, F177, 180, 182, F182, FR182, R182, TR182, 185, A185, 188, A188, T188, 190, 195, 205, 206, P206, U206, TU206, TP206, 207, T207, 210, P210, T210, 336, 337, F337, FP337, P337, T337, and T303 Series Airplanes

AGENCY: Federal Aviation Administration (FAA), DOT.

ACTION: Final rule.

SUMMARY: This amendment revised Airworthiness Directive (AD) 87–20–03, Amendment 39–5729, applicable to certain Cessna single and twin engine airplanes, which requires inspections, maintenance, and possible parts replacement of seat rails and seat assemblies. This amendment clarifies and corrects the wording, includes another option for temporary operation of the airplane, adds additional Supplemental Type Certificates (STCs) for corrective action, and lists the names and addresses of the STC holders.

DATES: *Effective Date:* April 4, 1988. *Compliance:* As prescribed in the body of the AD.

ADDRESSES: Cessna Single Engine Service Information Bulletin SE83–6, dated March 11, 1983, applicable to this AD may be obtained from Cessna Aircraft Company, Customer Service, P.O. Box 1521, Wichita, Kansas 67201. Copies of STCs applicable to this AD may be obtained from the holders as follows: STCs SA1196GL, SA1209GL, SA1210GL, SA1211GL, SA1212GL, SA1227GL, SA1228GL, SA1229GL, SA1230GL and SA1239GL, Aero Technologies, Inc., P. O. Box 191, Mt. Clemens, Michigan 48046, 313–469–1952; STC SA2960NM, B & D Company, Inc., 14409 141st Avenue, S.E., Renton,

Washington 98056, 206-244-4455; STC SA3643SW, The Rebound Company, P.O. Box 656, Marble Falls, Texas 78654, 512-693-5478. This information may be examined at the Rules Docket, FAA, Office of the Regional Counsel, Room 1558, 601 East 12th Street, Kansas City, Missouri 64106.

FOR FURTHER INFORMATION CONTACT: Mr. Douglas W. Haig, Aerospace Engineer, ACE-120W, Federal Aviation Administration, Wichita Aircraft Certification Office, 1801 Airport Road, Room 100, Wichita, Kansas 67209; Telephone 316-946-4409.

SUPPLEMENTARY INFORMATION: A proposal to amend Part 39 of the Federal Aviation Regulations to include an AD requiring inspections, maintenance, and possible parts replacement of seat rails and seat assemblies on certain single and twin engine Cessna airplanes was published in the **Federal Register** on December 2, 1987 (52 FR 45831). The proposal resulted from the necessity to revise and reissue AD 87-20-03, Amendment 39-5729, (52 FR 35689; September 23, 1987), to include all applicable models, clarify and correct wording, include another option for temporary operation of the airplane, add additional STCs for corrective action, and list the names and addresses of STC holders.

Interested persons have been afforded an opportunity to comment on the proposal. No comments or objections were received on the proposal. Accordingly, the proposal is adopted without change, except for minor editorial additions.

The FAA has determined that this regulation only involves 145,000 airplanes at an approximate annual cost of $90 for each airplane, or a total annual fleet cost of $13,050,000. This cost is so low that it will not have a significant impact on any small entities operating these airplanes.

Therefore, I certify that this action (1) is not a "major rule" under Executive Order 12291; (2) is not a "significant rule" under DOT Regulatory Policies and Procedures (44 FR 11034; February 26, 1979); and (3) will not have a significant economic impact, positive or negative, on a substantial number of small entities under the criteria of the Regulatory Flexibility Act. A copy of the final evaluation prepared for this action is contained in the regulatory docket. A copy of it may be obtained by contacting the Rules Docket at the location provided under the caption "**ADDRESSES**".

List of Subjects in 14 CFR Part 39

Air transportation, Aviation safety, Aircraft, Safety.

Adoption of the Amendment

Accordingly, pursuant to the authority delegated to me by the Administrator, the Federal Aviation Administration amends § 39.13 of Part 39 of the FAR as follows:

PART 39—[AMENDED]

1. The authority citation for Part 39 continues to read as follows:

Authority: 49 U.S.C. 1354(a), 1421 and 1423; 49 U.S.C. 106(g) (Revised, Pub. L. 97-449, January 12, 1983); and 14 CFR 11.89.

§ 39.13 [Amended]

2. By revising and reissuing AD 87-20-03, Amendment 39-5729, to read as follows:

CESSNA: Applies to the following model airplanes certificated in any category.

Models	Serial Nos.
150A, 150B, 150C, 150D, 150E, 150F, 150G, 150H, 150J, 150K, 150L, 150M.	15059019 thru 15079405.
A150K, A150L, A150M	A1500001 thru A1500734.
152, A152	All.
170, 170A, 170B	18000 thru 27169.
172, 172A, 172B, 172C, 172D, 172E, 172F, 172G, 172H, 172I, 172K, 172L, 172M, 172N, 172P, 172Q,.	All.
P172D	P17257120 thru P17257188.
R172E, R172F, R172G, R172H, R172J.	All.
R172K	R1722000 thru R1723454.
172RG	172RG0001 thru 172RG1191.
175, 175A	55001 thru 56777.
175B, 175C	17556778 thru 17557119.
177, 177A, 177B, 177RG	All.
180, 180A	30000 thru 32999.
180A, 180B, 180C	50000 thru 50911.
180D, 180E, 180F, 180G, 180H 180J, 180K.	18050912 thru 18053203.
182, 182A, 182B, 182C, 182D, 182E, 182F, 182G, 182H, 182J, 182K, 182L, 182M, 182N, 182P, 182Q, 182R, T182, R182, TR182.	All.
185, 185A, 185B, 185C, 185D, 185E, A185E, A185F.	All.
188, 188A, A188, A188A, 188B, A188B, T188C.	All.
190, 195, 195A, 195B	7001 thru 7999; 16000 thru 16183.
206, U206, U206A, U206B, U206C, U206D U206E, U206F, U206G, TU206A, TU206B, TU206C, TU206D, TU206E, TU206F, TU206G.	All.
P206, P206A, P206B, P206C, P206D, TP206A, TP206B, TP206C, TP206D.	P206-0001 thru P206-0603.
P206E, TP206E	P20600604 thru P20600647.
207, T207, 207A, T207A	All.
210, 210A, 210B, 210C, 210D, 210E, 210F, 210G, 210H, 210J, 210K, 210L, 210M, 210N, P210N, T210F, T210G, T210H, T210J, T210K, T210L, T210M, T210N, 210R, T210R, P210R.	All.
210-5 (205), 210-5A (205A)	205-0001 thru 205-0577.
336	336-0001 thru 336-0195.
337, 337A, 337B, 337C, 337D, 337E, 337F, 337G, 337H, T337B, T337C, T337D, T337E, T337F, T337G, T337H, P337H, T337H-SP.	All.
T303	All.
F150G, F150H, F150J, F150K, F150L, F150M, FA150K, FA150L, FRA150L, FRA150M.	All.
FA152, F152	All.
FP172	FP172-0001 thru FP172-0003.
F172F, F172G, F172H, F172K, F172L, F172M, F172N, F172P, FR172E, FR172F, FR172G, FR172H, FR172J, FR172K.	All.
F177RG	All.
F182P, F182Q	All.
FR182	All.
F337E, F337F, F337G, F337H.	All.
FP337	All.

Compliance: Required as follows, unless already accomplished.

I. For airplanes operating for compensation or hire:

(A) For airplanes having less than 1,000 hours time-in-service (TIS) on the effective date of this AD, accomplish the AD requirements prior to the accumulation of 1,100 hours TIS;

(B) For airplanes having 1,000 or more hours TIS on the effective date of this AD, accomplish the AD requirements within the next 100 hours TIS;

(C) Following the actions of (A) or (B) above, repeat the AD requirements at each 100 hours TIS thereafter. For airplanes covered by an FAA approved inspection program, these inspections can be accomplished at the next scheduled inspection or within the next 100 hours, whichever is later.

II. For airplanes operating under FAR Part 91:

(A) For airplanes having less than 1,000 hours TIS on the effective date of this AD, accomplish the AD requirements at the next annual inspection after the accumulation of 1,000 hours TIS;

(B) For airplanes having 1,000 or more hours TIS on the effective date of this AD, accomplish the AD requirements at the next annual inspection;

(C) Following the actions of (A) or (B) above, repeat the AD requirements at each annual inspection thereafter.

To assure proper engagement of the seat locking mechanism and to preclude

inadvertent seat slippage, accomplish the following on each pilot and copilot seat and all associated seat rails:

(a) In accordance with the appropriate compliance time requirement above, accomplish the following:

(1) Measure each hole in the seat track(s) for excessive wear. When checking these holes for wear, an allowance of 0.020 inches below the edge of the normal surface is permitted for the required measurement.

(i) If the wear dimension across any hole exceeds 0.36 inches but does not exceed 0.42 inches (see Figure 1a), continue to measure each hole every 100 hours time-in-service for excessive wear.

(ii) If the wear dimension across any hole exceeds 0.42 inches, prior to further flight, replace the seat track.

(2) Visually inspect the seat rail holes for dirt and any debris which may preclude engagement of the seat pin(s). Prior to further flight, remove any such material.

(3) Lift up on the forward edge of each seat to eliminate all vertical play. In this position, measure the depth of engagement of each seat pin. If the engagement of any pin is less than 0.15 inches (see Figure 1b), prior to further flight, replace or repair necessary components to achieve a seat pin engagement of 0.15 inches or greater. If the track is worn, this dimension is measured from the worn surface, not the manufactured surface.

(4) Visually inspect seat rollers for flat spots. Assure all rollers and washers, meant to rotate, turn freely on their axle bolts (or bushings if installed). Prior to further flight, replace rollers having flat spots and any worn washers. If there is any binding between the bores of the rollers, washers, and axle bolts (or bushings if installed), prior to further flight, remove, clean, and reinstall these parts.

Note: Do not lubricate rollers, washers, axle bolts or bushings as the lubricant will attract dust and other particles which can cause binding.

(5) Measure the wall thicknesses of the roller housing and the tang (see Figure 1b). If the tang thickness has worn to less than ½ the housing thickness, prior to further flight, replace the roller housing

(6) Check the spring(s) that keep the lock pin(s) in position in the track holes for positive engagement action. Prior to further flight, replace any spring which does not provide positive engagement.

(7) Visually inspect the seat tracks for cracks in accordance with Cessna Single Engine Service Information Letter SE83-6, dated March 11, 1983. Prior to further flight, replace any seat rail exceeding the crack criteria as specified in SE83-6 with an airworthy rail.

(b) In the event replacement parts are not available but have been ordered, to permit the airplane to be flown until required parts are installed, accomplish one of the following options. However, by no later than October 1, 1988, accomplish the compliance to paragraph (a) of this AD.

Option 1

(1) Install a Cessna Cargo Tie-Down Clamp, Part Number 0711121-2 or 1201039-1 on the seat rail and clamp it in position so as to limit the aft movement of the seat to 8 inches on all models of the 150 and 152 and 10 inches on all other applicable models.

(2) Install a placard with a minimum letter size of ⅛ inch on the instrument panel in clear view of the pilot which states: PARTS TO COMPLY WITH PARA (a) OF AD 87-20-03 ARE ON ORDER. SEAT RAILS HAVE BEEN MODIFIED PER OPTION 1 OF AD 87-20-03.

(3) Remove the placard and tie-down clamp when airworthy seat rail parts are installed.

Option 2

(1) Determine which of the three configurations of seat track (0.50 inches high standard configurations, 0.69 inches high standard configurations, or 0.50 inches high with carpet retainers) is appropriate. These dimensions are measured from floor to top of rail.

(2) For airplanes incorporating the standard cross section rail .50 inches high, position the seat with the latching pin in the most forward locking position. Locate an AN3 bolt with a standard lock nut horizontally under the rail cap through one of the seat positioning holes to allow a maximum of 6 inches of travel on the seat.

(3) For airplanes incorporating the standard cross section rail .69 inches high, position the seat with the latching pin in the most forward locking position. Locate an AN4 bolt with a standard lock nut horizontally under the rail cap through one of the seat positioning holes that will provide a maximum of 6 inches of travel on the seat.

Note: It may be necessary to slightly clean out the hole with a ¼ inch drill.

(4) On those airplanes incorporating the carpet retainer feature with a rail height of .50 inches, locate the seat with the latching pin in the most forward locking position. Identify the seat retaining pin hole in the seat rail that provides a stop at the position that limits the seat roller housing travel to a maximum of 6 inches. Using a rotary file or other similar device, to provide clearance, remove the carpet retaining flanges local to the hole and insert an AN3 bolt horizontally through the rail under the rail cap and retain with a standard locking nut.

(5) On those forward roller housings made of aluminum accomplish the following:

(i) Remove the roller attach bolts and install two AN970-3 washers on the outside of each side of each forward roller housing.

(ii) Install an AN3 bolt of proper length and secure with a standard lock nut.

(6) Install a placard with a minimum letter size of ⅛ inch on the instrument panel in clear view of the pilot which states: PARTS TO COMPLY WITH PARA (a) OF AD 87-20-03 ARE ON ORDER. SEAT RAILS HAVE BEEN MODIFIED PER OPTION 2 OF AD 87-20-03.

(7) Remove the placard and bolts when airworthy seat rail parts are installed.

Option 3

(1) On eligible airplanes install one of the following STCs: SA2960NM, SA1196GL, SA1209GL, SA1210GL, SA1211GL, SA1212GL, SA1227GL, SA1228GL, SA1229GL, SA1230GL, SA1239GL, or SA3643SW.

Note: The STC provisions may be removed after compliance with paragraph (a) of this AD.

(2) Install a placard with a minimum letter size of ⅛ inch on the instrument panel in clear view of the pilot which states: PARTS TO COMPLY WITH PARA (a) OF AD 87-20-03 ARE ON ORDER. STC SA [Insert applicable STC number] HAS BEEN INSTALLED.

(3) Remove the placard when airworthy seat rail parts are installed.

(c) Airplanes may be flown in accordance with FAR 21.197 to a location where this AD may be accomplished.

(d) Any parts replaced per this AD are exempt from the inspections required herein until such parts have attained 1,000 hours TIS.

(e) An equivalent method of compliance with this AD may be used if approved by the Manager, Wichita Aircraft Certification Office, Federal Aviation Administration, 1801 Airport Road, Room 100, Wichita, Kansas 67209; Telephone 316-946-4400.

All persons affected by this directive may obtain copies of the documents referred to herein upon request to Cessna Aircraft Company, Customer Service, P.O. Box 1521, Wichita, Kansas 67201; STCs SA1196GL, SA1209GL, SA1210GL, SA1211GL, SA1212GL, SA1227GL, SA1228GL, SA1229GL, SA1230GL and SA1239GL, Aero Technologies, Inc., P.O. Box 191, Clemens, Michigan 48046, 313-469-1952; STC SA2960NM, B&D Company, Inc., 14409 141st Avenue, S.E., Renton, Washington 98056, 206-244-4455; STC SA3643SW, The Rebound Company, P.O. Box 656, Marble Falls, Texas 78654, 512-693-5478; or may examine the documents referred to herein at the Federal Aviation Administration, Office of the Regional Counsel, Room 1558, 601 East 12th Street, Kansas City, Missouri 64106.

This amendment revises AD 87-20-03, Amendment 39-5729.

This amendment becomes effective on April 4, 1988.

Issued in Kansas City, Missouri, on February 18, 1988.

Jerold M. Chavkin,

Acting Director, Central Region.

BILLING CODE 4910-13-M

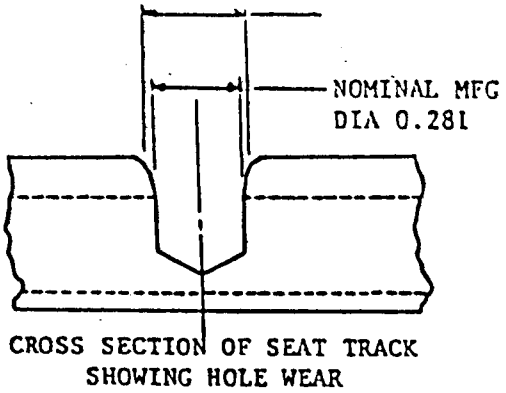

FIGURE 1a

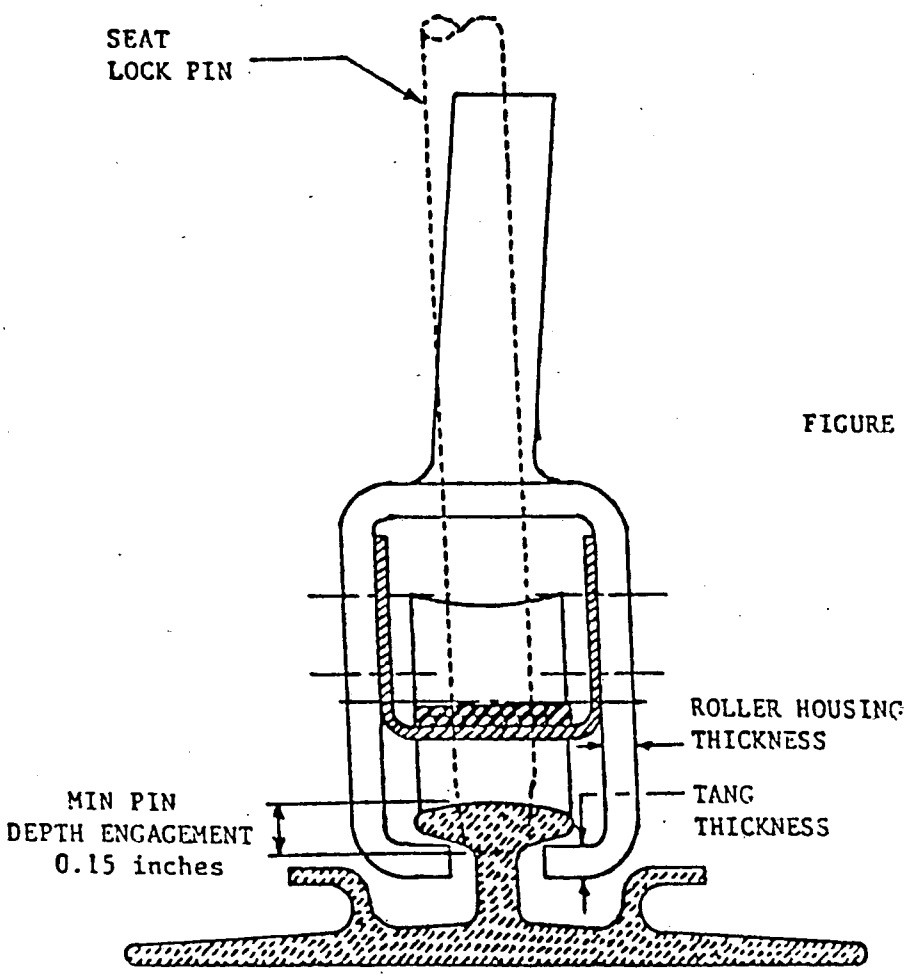

FIGURE 1b

FIGURE 1

[FR Doc. 4083 Filed 2-25-88; 8:45 am]
BILLING CODE 4910-13-C

14 CFR Part 39

[Docket No. 87-NM-119-AD; Amdt. 39-5862]

Airworthiness Directives; Fokker Model F-28 Series Airplane

AGENCY: Federal Aviation Administration (FAA), DOT.

ACTION: Final rule.

SUMMARY: This amendment adopts a new airworthiness directive (AD), applicable to certain Fokker Model F-28 series airplanes, which requires installation of stops in the rudder pedal adjustment mechanism. This amendment is prompted by reports of insufficient rudder deflection when the rudder pedals are adjusted to the maximum forward position. This condition, if not corrected, could result in reduced directional control capability of the airplane.

EFFECTIVE DATE: April 8, 1988.

ADDRESSES: The applicable service information may be obtained from Fokker Aircraft USA, 1199 N. Fairfax Street, Alexandria, Virginia 22314. This information may be examined at the FAA, Northwest Mountain Region, 17900 Pacific Highway South, Seattle, Washington, or the Seattle Aircraft Certification Office, 9010 East Marginal Way South, Seattle, Washington.

FOR FURTHER INFORMATION CONTACT: Mr. Bob Huhn, Standardization Branch, ANM-113; telephone (206) 431-1967. Mailing address: FAA, Northwest Mountain Region, 17900 Pacific Highway South, C-68966, Seattle, Washington 98168.

SUPPLEMENTARY INFORMATION: A proposal to amend Part 39 of the Federal Aviation Regulations to include an airworthiness directive, which requires installation of stops in the rudder pedal adjustment mechanism on certain Fokker Model F-28 series airplanes, was published in the **Federal Register** on December 11, 1987 (52 FR 47016).

Interested parties have been afforded an opportunity to participate in the making of this amendment. Due consideration has been given to the single comment received.

The commenter, the Air Transport Association (ATA) of America, had no objections to the proposal.

After careful review of the available data, the FAA has determined that air safety and the public interest require the adoption of the rule as proposed.

It is estimated that 51 airplanes of U.S. registry will be affected by this AD, that it will take approximately 6 manhours per airplane to accomplish the required actions, and that the average labor cost will be $40 per manhour. Based on these figures, the total cost impact of the AD to U.S. operators is estimated to be $12,240.

For the reasons discussed above, the FAA has determined that this regulation is not considered to be major under Executive Order 12291 or significant under Department of Transportation Regulatory Policies and Procedures (44 FR 11034; February 26, 1979); and it is further certified under the criteria of the Regulatory Flexibility Act that this rule will not have a significant economic impact, positive or negative, on a substantial number of small entities because of the minimal cost of compliance per airplane ($240). A final evaluation has been prepared for the regulation and has been placed in the docket.

List of Subjects in CFR Part 39

Aviation safety, Aircraft.

Adoption of the Amendment

Accordingly, pursuant to the authority delegated to me by the Administrator, the Federal Aviation Administration amends § 39.13 of Part 39 of the Federal Aviation Regulations as follows:

PART 39—[AMENDED]

1. The authority citation for Part 39 continues to read as follows:

Authority: 49 U.S.C. 1354(a), 1421 and 1423; 49 U.S.C. 106(g) (Revised Pub. L. 97-449, January 12, 1983); and 14 CFR 11.89.

§ 39.13 [Amended]

2. By adding the following new airworthiness directive:

Fokker Aircraft: Applies to Model F-28 series airplanes, Serial Numbers 11003 to 11231 inclusive, 11991 and 11992, certificated in any category. Compliance required as indicated, unless previously accomplished.

To prevent reduced directional control capability, accomplish the following:

A. Within the next six months after the effective date of this AD, install stops in the rudder pedal mechanism in accordance with Fokker Service Bulletin F28/27-158, dated November 15, 1985.

B. An alternate means of compliance or adjustment of compliance time, which provides an acceptable level of safety, may be used when approved by the Manager, Standardization Branch, ANM-113, FAA, Northwest Mountain Region.

C. Special flight permits may be issued in accordance with FAR 21.197 and 21.199 to operate airplanes to a base for the accomplishment of inspections and/or modifications required by this AD.

All persons affected by this directive who have not already received the appropriate service documents from the manufacturer may obtain copies upon request to Fokker Aircraft USA, 1199 N. Fairfax St., Alexandria, Virginia 22314.

These documents may be examined at the FAA, Northwest Mountain Region, 17900 Pacific Highway South, Seattle, Washington, or at the Seattle Aircraft Certification Office, 9010 East Marginal Way South, Seattle, Washington.

This amendment becomes effective April 8, 1988.

Issued in Seattle, Washington, on February 17, 1988.

Wayne J. Barlow,

Director, Northwest Mountain Region.

[FR Doc. 88-4085 Filed 2-25-88; 8:45 am]

BILLING CODE 4910-13-M

14 CFR Part 39

[Docket No. 87-CE-32-AD; Amdt. 39-5861]

Airworthiness Directives; Piper PA-31 Series Airplanes

AGENCY: Federal Aviation Administration (FAA), DOT.

ACTION: Final rule.

SUMMARY: This Amendment adopts a new Airworthiness Directive (AD), applicable to certain Piper PA-31 series airplanes, which requires initial and repetitive fluorescent penetrant or a dye penetrant inspection for cracks in the main landing gear forward side brace and replacement as necessary. Several reports have been received of cracks in the main landing gear forward side brace. A failed side brace would prevent landing gear retraction and could cause landing gear collapse under high side load conditions. The inspections and/or replacement of affected side braces will prevent these conditions. The repetitive inspections are no longer required after new improved side braces are installed.

DATES: *Effective Date:* April 4, 1988. *Compliance:* As prescribed in the body of the AD.

ADDRESSES: Piper Service Bulletin No. 845A, dated October 9, 1987, applicable to this AD may be obtained from Piper Aircraft Corporation, 29265 Piper Drive, Vero Beach, Florida 32960; telephone (305) 567-4361. This information may be examined at the Rules Docket, FAA, Office of the Regional Counsel, Room 1558, 601 East 12th Street, Kansas City, Missouri 64106.

FOR FURTHER INFORMATION CONTACT: Charles L. Perry, ACE-120A, Aerospace Engineer, Airframe Branch, Atlanta Aircraft Certification Office, FAA, Suite 210C, 1669 Phoenix Parkway, Atlanta, Georgia 30349; telephone (404) 991-2910.

SUPPLEMENTARY INFORMATION: A proposal to amend Part 39 of the Federal

Aviation Regulations to include an AD requiring initial and repetitive fluorescent penetrant or dye penetrant inspection of the main landing gear forward side brace for cracks and replacement as necessary on certain Piper Model PA-31 airplanes was published in the **Federal Register** on November 19, 1987 (52 FR 44406). The proposal resulted from reports of cracks in the main landing gear forward side brace. Piper Aircraft Corporation issued Service Bulletin No. 845A, dated October 9, 1987, which requires initial and repetitive dye penetrant or fluorescent penetrant inspection for cracks in the main landing gear forward side brace. A failed side brace would prevent landing gear retraction and could cause landing gear collapse under high side load conditions.

Since the condition described herein is likely to exist or develop in other Piper Model PA-31 airplanes of the same design, the AD requires initial and repetitive dye penetrant or fluorescent penetrant inspection for cracks in the main landing gear forward side brace and replacement if cracks are found. The inspections and/or replacement of affected side braces will prevent these conditions.

Interested persons have been afforded an opportunity to comment on the proposal. One commenter responded. Since the proposed AD would permit the use of a Fluorescent Penetrant Inspection (FPI) or a Dye Penetrant Inspection (DPI), the commenter's concern was that the penetrant type may be alternated from inspection to inspection with the resulting residue shielding a detectable crack. The commenter indicated that FPI was more sensitive and accordingly recommended it as the authorized inspection method. Since FPI requires additional equipment that some fixed based operators may not have, both methods will be included in the AD with the provision that the first method used must be continued at each subsequent inspection. The commenter also suggested a more definitive term for the inspection procedures. The FAA agrees with this comment and the AD will relect this change. In addition editorial clarifications have been to the AD regarding replacement part number information and the model and serial number applicability.

There were no comments on the cost determination. The FAA has determined that this regulation only involves approximately 4196 airplanes at an approximate one-time cost of $620.00 for each airplane, or a total one-time fleet cost of $2,601,520. This cost precludes the AD from having a significant economic impact on any small entity under the criteria of the Regulatory Flexibility Act.

Therefore, I certify that this action (1) is not a "major rule" under Executive Order 12291; (2) is not a "significant rule" under DOT Regulatory Policies and Procedures (44 FR 11034; February 26, 1979); and (3) will not have a significant economic impact, positive or negative, on a substantial number of small entities under the criteria of the Regulatory Flexibility Act. A copy of the final evaluation prepared for this action is contained in the regulatory docket. A copy of it may be obtained by contacting the Rules Docket at the location provided under the caption "**ADDRESSES**".

List of Subjects in 14 CFR Part 39

Air transportation, Aviation safety, Aircraft, Safety.

Adoption of the Amendment

Accordingly, pursuant to the authority delegated to me by the Administrator, the Federal Aviation Administration amends § 39.13 of the Part 39 of the FAR as follows:

PART 39—[AMENDED]

1. The authority citation for Part 39 continues to read as follows:

Authority: 49 U.S.C. 1354(a), 1421 and 1423; 49 U.S.C. 106(g) (Revised, Pub. L. 97-449, January 12, 1983); and 14 CFR 11.89.

§ 39.13 [Amended]

2. By adding the following new AD:

Piper: Applies to Models PA-31-300, PA-31-310, PA-31-325 (S/Ns 31-2 through 31-8312019); PA-31-350 (S/Ns 31-5001 through 31-8452021); PA-31-350 T-1020 (S/Ns 31-8253001 through 31-8553002); PA-31P (S/Ns 31P-2 through 31P-7730012); PA-31P-350 (S/Ns 31P-8414001 through 31P-8414050); PA-31T (S/Ns 31T-7400002 through 31T-8120104); PA-31T1 (S/Ns 31T-7804001 through 31T-1104017); PA-31T2 (S/Ns 31T-8166001 through 31T-1166008) airplanes certificated in any category.

Compliance: Required within the next 100 hours time-in-service (TIS) after the accumulation of 1000 hours airplane TIS for those airplanes with less than 1000 hours TIS on the effective date of this AD and, within the next 100 hours TIS after the effective date of this AD for those airplanes with more than 1000 hours TIS on the effective date of this AD, unless already accomplished.

To preclude landing gear collapse, accomplish the following:

(a) Visually inspect using a fluorescent penetrant or dye penetrant method, the main landing gear forward side brace for cracks in accordance with the Part I Instructions Section of Piper Service Bulletin No. 845A, dated October 9, 1987.

(1) If no cracks are found, repeat the inspection at intervals not to exceed 100 hours TIS thereafter.

(2) If cracks are found, prior to further flight, replace the cracked part with an uncracked servicable part, in accordance with the appropriate Piper airplane maintenance manual.

(3) Retain the method of the initial inspection per paragraph (a) of this AD thereafter at each subsequent 100 hour repetitive inspection per paragraph (a)(1) of this AD.

Note: Changing the method of the inspection from that selected for the initial inspection may adversely affect the ability of the penetrant system to reveal a detectable crack.

(b) The repetitive inspection requirements listed under paragraph (a)(1) of this AD may be discontinued upon replacement of the forward side brace with a newly designed part listed under "MATERIALS REQUIRED" of Part II, Service Bulletin No. 845A, dated October 9, 1987.

(c) Airplanes may be flown in accordance with FAR 21.197 to a location where this AD may be accomplished.

(d) The intervals between repetitive inspections required by this AD may be adjusted up to 10 percent of the specified interval to allow accomplishing these inspections concurrent with other scheduled maintenance of the airplane.

(e) An equivalent means of compliance with this AD may be used if approved by the Manager, Atlanta Aircraft Certification Office, FAA Central Region, Suite 210C, 1669 Phoenix Parkway, Atlanta, Georgia 30349.

All persons affected by this directive may obtain copies of the documents referred to herein upon request to Piper Aircraft Corporation, 2926 Piper Drive, Vero Beach, Florida 32960; telephone (305) 567-4361; or may examine the documents referred to herein at FAA, Office of the Regional Counsel, Room 1558, 601 East 12th Street, Kansas City, Missouri 64106.

This amendment becomes effective on April 4, 1988.

Issued in Kansas City, Missouri, on February 17, 1988.

Paul K. Bohr,

Director, Central Region.

[FR Doc. 88-4084 Filed 2-25-88; 8:45 am]

BILLING CODE 4910-13-M

NATIONAL AERONAUTICS AND SPACE ADMINISTRATION

14 CFR Parts 1206 and 1207

Availability of Agency Records to Members of the Public; Standards of Conduct Correction

AGENCY: National Aeronautics and Space Administration (NASA).

ACTION: Correction.

SUMMARY: This action corrects numbering and lettering errors found in Part 1206 published in the **Federal Register** on October 28, 1987 (52 FR 41406). This action redesignates paragraphs (b)(7) (A)-(F) as (b)(7) (i)-(vi) in Subpart 1206.300. Also, the first undesignated paragraph following newly designated paragraph 1206.300(b)(7)(vi) is numbered (A) and moved with all the language down to the next undesignated paragraph to follow newly designated paragraph (b)(7)(i). The subparagraphs within that section change from (A) and (B) to (*1*) and (*2*).

This action also corrects Part 1207, Standards of Conduct, published in the **Federal Register** on June 16, 1987 (52 FR 22755). This action corrects a typographical error in § 1207.405(a)(2). Subparagraphs (vi) and (vii) should be (v) and (vi).

FOR FURTHER INFORMATION CONTACT: Elizabeth N. Siegel, 202/453-2465.

PART 1206—[CORRECTED]

Subpart 3—Exemptions

1. Section 1206.300(b)(7) is correctly revised to read as follows:

§ 1206.300 [Amended]

* * * * *

(b) * * *

(7) Records or information compiled for law enforcement purposes, but only to the extent that the production of such law enforcement records or information—

(i) Could reasonably be expected to interfere with enforcement proceedings.

(A) Whenever a request is made which involves access to these records and—

(*1*) The investigation or proceeding involves a possible violation of criminal law; and

(*2*) There is reason to believe that the subject of the investigation or proceeding is not aware of its pendency and disclosure of the existence of the records could reasonably be expected to interfere with enforcement proceedings, the agency may, during only such time as the circumstance continues, treat the records as not subject to the requirements of this section,

(ii) Would deprive a person of a right to a fair trial or an impartial adjudication,

(iii) Could reasonably be expected to constitute an unwarranted invasion of personal privacy,

(iv) Could reasonably be expected to disclose the identity of a confidential source, including a State, local, or foreign agency or authority or any private institution which furnished information on a confidential basis, and, in the case of a record or information compiled by criminal law enforcement authority in the course of a criminal investigation or by an agency conducting a lawful national security intelligence investigation, information furnished by a confidential source,

(v) Would disclose techniques and procedures for law enforcement investigations or prosecutions, or would disclose guidelines for law enforcement investigations or prosecutions if such disclosure could reasonably be expected to risk circumvention of the law, or

(vi) Could reasonably be expected to endanger the life or physical safety of any individual.

* * * * *

PART 1207—[CORRECTED]

2. In § 1207.405 paragraphs (a)(2) (vi) and (vii) are correctly designated (a)(2) (v) and (vi) respectively. As revised, paragraphs (a)(2) (v) and (vi) read as follows:

§ 1207.405 [Amended]

(a) * * *

(2) * * *

(v) Site Selection Boards;

(vi) Performance Evaluation Boards or Committees administering the award fee of a contract.

* * * * *

John E. O'Brien,

General Counsel.

[FR Doc. 88-4231 Filed 2-25-88; 8:45 am]

BILLING CODE 7510-01-M

DEPARTMENT OF HEALTH AND HUMAN SERVICES

Food and Drug Administration

21 CFR Part 184

[Docket No. 84G-0320]

Direct Food Substances Affirmed as Generally Recognized as Safe; Acacia (Gum Arabic)

AGENCY: Food and Drug Administration.

ACTION: Final rule.

SUMMARY: The Food and Drug Administration (FDA) is amending the regulation that affirms that the use of acacia (gum arabic) is generally recognized as safe (GRAS), with specific limitations, as a direct human food ingredient. The agency is adding the use of acacia in quiescently frozen confection products at a maximum use level of 6 percent to the specific limitations listed in § 184.1330. This action responds to a petition filed by Heinz U.S.A.

EFFECTIVE DATE: February 26, 1988.

FOR FURTHER INFORMATION CONTACT: Hortense S. Macon, Center for Food Safety and Applied Nutrition (HFF-335), Food and Drug Administration, 200 C St. SW., Washington, DC 20204, 202-472-5690.

SUPPLEMENTARY INFORMATION: In accordance with the procedures described in 21 CFR 170.35, Heinz U.S.A., Pittsburgh, PA 15230, submitted a petition (GRASP 4G0290) requesting that 21 CFR 184.1330 be amended to provide for the safe use of acacia as a formulation aid and as a stabilizer and thickener at a level of 6 percent in quiescently frozen confection products.

FDA published a notice of filing of this petition in the **Federal Register** of October 19, 1984 (49 FR 41110), and gave interested persons an opportunity to submit comments on this petition to the Dockets Management Branch (HFA-305), Food and Drug Administration, Rm. 4-62, 5600 Fishers Lane, Rockville, MD 20857. No comments were received in response to this notice of filing.

I. Introduction

Quiescently frozen confections are food products that are generally prepared by freezing, without stirring or agitation. They are usually manufactured in single servings, are individually packaged or bagged, and may be mounted on a wooden stick. Acacia functions as a bulking agent in these products and provides the necessary solids to achieve the desired texture after freezing.

The petitioner describes 6.0 percent as both the desired and maximum level of use for acacia in quiescently frozen confections. The petition includes data and information on the labeling, use level, and formulation of quiescently frozen confections that contain acacia. "Quiescently frozen confection" is not listed as a general food category in 21 CFR 170.3(n).

II. Use and Exposure Estimates

In the **Federal Register** of September 23, 1974 (39 FR 34203), FDA proposed to affirm that the use of acacia (gum arabic) is GRAS with specific limitations. In the **Federal Register** of December 7, 1976 (41 FR 53608), FDA issued a final rule based upon this proposal (21 CFR 184.1330).

Under § 184.1330, acacia is affirmed as GRAS for use in the following food categories at the following levels: Beverages and beverage bases (2

percent), chewing gum (5.6 percent), confections and frostings (12.4 percent), dairy product analogs (1.3 percent), fats and oils (1.5 percent), gelatins, puddings, and fillings (2.5 percent), hard candy and cough drops (46.5 percent), nuts and nut products (8.3 percent), snack foods (4 percent), soft candy (85 percent), and all other foods (1 percent). The use of acacia in quiescently frozen confections would come within the "all other foods" category.

FDA has estimated, from data in the petition and other data in the 1971 National Academy of Sciences/National Research Council (NAS/NRC) survey of food manufacturers, that the cumulative intake of acacia from current uses of this ingredient is 2.5 grams per person per day. The proposed use of acacia in quiescently frozen confection products will increase intake 0.05 grams per person per day, an increase of 2 percent.

III. Safety

No safety data were submitted with the petition. The petitioner cited toxicological data contained in the report of the Select Committee on GRAS Substances (the Select Committee) on acacia (gum arabic) to support the safety and GRAS status of the use of this substance in quiescently frozen confections. In its report, the Select Committee evaluated all of the available safety information on acacia and concluded that acacia poses no safety hazard to the public when it is used at current levels. The Select Committee believed, however, that because of the prevalence of allergies to gum arabic, it was not possible without additional data to determine whether significant increases in consumption of gum arabic would constitute a dietary hazard.

In 1982, FDA conducted a scientific literature search to update its information on acacia. The agency then reviewed toxicological data that it found in this search including 2-year carcinogenicity feeding studies of acacia in the rat and metabolic studies. No toxicological effects were noted in these studies or in the other information gathered in the search. Moreover, in 1981, the Joint Expert Committee on Food Additives (JECFA) of the World Health Organization evaluated acacia for acceptable daily intake and did not place a limit on its dietary use.

The agency has reviewed the use described in the petition and finds that this use will result in a low level of acacia in quiescently frozen confections. This level is much lower than other levels of use of acacia that FDA has affirmed as GRAS in other food categories. In addition, the 2 percent increase in consumer exposure to acacia that will result from the petitioned use will not add significantly to total consumer exposure to this ingredient. Even with the increase in exposure from this use, exposure to acacia will be well within safe levels.

Moreover, there is no indication that the increased dietary exposure will exacerbate allegenicity concerns of sensitive individuals or create other health hazards. Acacia must be declared on the label when used as an ingredient in quiescently frozen confection. Consequently, people who are allergic to acacia will be able to avoid this food. Therefore, based on the above data and considerations, FDA finds that the petitioned use of acacia is GRAS.

IV. Conclusion

FDA has evaluated all of the available information on acacia. Based on its review, the agency concludes that the data are adequate to demonstrate the safety of the dietary exposure to acacia that will result from the petitioned use. Therefore, FDA is affirming the GRAS status of the use of acacia as a formulation aid as defined in 21 CFR 170.3(o)(14) and as a stabilizer and thickener as defined in 21 CFR 170.3(o)(28) for use in quiescently frozen confection products at a maximum use level of 6 percent.

The agency has determined under 21 CFR 25.24(b)(7) that this action is of a type that does not individually or cumulatively have a significant effect on the human environment. Therefore, neither an environmental assessment nor an environmental impact statement is required.

In accordance with the Regulatory Flexibility Act, the agency considered the potential effects that this rule would have on small entities, including small businesses and has determined that the effect of this rule is to permit an additional use of acacia (gum arabic) by both large and small businesses. In accordance with section 605(b) of the Regulatory Flexibility Act, the agency has determined that no significant impact on a substantial number of small entities would derive from this action.

In accordance with Executive Order 12291, FDA has analyzed the economic effects of this final rule and has determined that the rule is not a major rule as defined by the Order. The agency's findings of no major economic impact and no significant impact on a substantial number of small entities, and the evidence supporting these findings, are contained in a threshold assessment which is on file with the Dockets Management Branch (address above).

List of Subjects in 21 CFR Part 184

Food ingredients.

Therefore, under the Federal Food, Drug, and Cosmetic Act and under authority delegated to the Commissioner of Food and Drugs and redelegated to the Director of the Center for Food Safety and Applied Nutrition, Part 184 is amended as follows:

PART 184—DIRECT FOOD SUBSTANCES AFFIRMED AS GENERALLY RECOGNIZED AS SAFE

1. The authority citation for 21 CFR Part 184 continues to read as follows:

Authority: Secs. 201(s), 402, 409, 701, 52 Stat. 1046–1047 as amended, 1055–1056 as amended, 72 Stat. 1784–1788 as amended (21 U.S.C. 321(s), 342, 348, 371); 21 CFR 5.10, 5.61.

2. Section 184.1330 is amended by alphabetically inserting a new entry in the table in paragraph (c) to read as follows:

§ 184.1330 Acacia (gum arabic).

* * * * *

(c) * * *

Food (as served)	Percent	Function
* * *	*	* *
Quiescently frozen confection products.	6.0	Formulation aid, § 170.3(o)(14) of this chapter; stabilizer and thickener, § 170.3(o)(28) of this chapter.
* * *	*	* *

* * * * *

Dated: February 11, 1988.

Richard J. Ronk,

Acting Director, Center for Food Safety and Applied Nutrition.

[FR Doc. 88–4103 Filed 2–25–88; 8:45 am]

BILLING CODE 4160-01-M

DEPARTMENT OF THE INTERIOR

Office of Surface Mining Reclamation and Enforcement

30 CFR Part 925

Approval of Permanent Program Amendments From the State of Missouri Under the Surface Mining Control and Reclamation Act of 1977

AGENCY: Office of Surface Mining Reclamation and Enforcement (OSMRE), Interior.

ACTION: Final rule.

SUMMARY: OSMRE is announcing the approval of program amendments

submitted by Missouri as modifications to the State's permanent regulatory program (hereinafter referred to as the Missouri program) under the Surface Mining Control and Reclamation Act of 1977 (SMCRA). The amendments were submitted on February 4, 1987. The amendments pertain to: Bonding, backfilling and grading, tree and shrub stocking, bond types and conditions, bond liability release criteria for temporary structures, pattern of violation requirements, and enforcement actions for notices of delinquent reclamation.

EFFECTIVE DATE: February 26, 1988.

FOR FURTHER INFORMATION CONTACT: Mr. William J. Kovacic, Director, Office of Surface Mining Reclamation and Enforcement, Kansas City Field Office, 1103 Grand Avenue, Room 502, Kansas City, Missouri 64106, Telephone: (816) 374-5527.

SUPPLEMENTARY INFORMATION:

I. Background

The Secretary of the Interior approved the Missouri program on November 21, 1980 (45 FR 77017). Information pertinent to the general background and revisions to the permanent program submission, as well as the Secretary's findings, the disposition of the comments, and a detailed explanation of the conditions of approval of the Missouri program can be found in the November 21, 1980 **Federal Register** (45 FR 77017). Subsequent actions concerning proposed amendments and the conditions of approval are identified at 30 CFR 925.15, 925.16, and 925.20.

II. Submission of Amendments

By letter dated February 4, 1987 (Administrative Record No. MO-307), Missouri submitted certain proposed revisions to the Missouri regulatory program. These revisions are intended, in part, to satisfy eight required amendments imposed as part of the rulemaking approving an earlier amendment (30 CFR 925.16).

On January 30, 1986, OSMRE sent Missouri a letter under 30 CFR 732.17(d) concerning the adequacy of the State's bonding system (Administrative Record No. MO-351). The proposed amendment includes revisions to the Missouri statute and corresponding regulations to address, in part, concerns in the January 30, 1986 OSMRE letter. In addition to the bonding system changes in this rulemaking, OSMRE requires further bonding system changes under the January 30, 1986 letter. These changes should provide further assurance that sufficient money is available to complete the reclamation plan for any areas which may be in default and that there is a substantial economic incentive for the permittee to comply with all reclamation provisions.

The revisions modify sections of the Revised Statutes of Missouri (RSMo) at 444.950; 444.960; and 444.965, RSMo 1986, as summarized below:

1. Missouri amends 444.950, RSMo 1986, to raise the performance bond to $2,500 from $500 per acre. The increased bond applies to undisturbed acres under existing permits and acres proposed for permit. This change is in response to the January 30, 1986 OSMRE letter written under 30 CFR 732.17(d) concerning the adequacy of the bonding system.

2. Missouri amends 444.960 and 444.965, RSMo 1986, to raise the reclamation bond fund ceiling from $3 million to $7 million. This change is in response to the January 30, 1986 OSMRE letter written under 30 CFR 732.17(d) concerning the adequacy of the bonding system.

The Missouri Land Reclamation Commission (MLRC) has now experienced several bond forfeitures that have placed a liability on the Coal Mine Land Reclamation Fund (CMLRF). When forfeiture proceedings are completed for all presently anticipated forfeiture sites, funds available in the CMLRF will be substantially short of those necessary to complete reclamation in accordance with the approved permit and plan.

The MLRC has issued several reports on the status of both potential and actual bond forfeiture sites within the State and has made substantial progress through its bonding task force to analyze the reclamation liabilities of the various forfeiture sites. The MLRC has not yet, however, been able to develop a plan for resolving the current backlog of forfeiture sites as required in the Director's letter of January 30, 1986.

The revisions also modify sections of the Missouri Code of State Regulations (CSR) at: 10 CSR 40-2.090(5); 10 CSR 40-3.040 (2), (6), and (17); 10 CSR 40-3.110(1); 10 CSR 40-3.120(7); 10 CSR 40-3.200 (2) and (16); 10 CSR 40-3.270(7); 10 CSR 40-7.011(2) and (3); 10 CSR 40-7.021(2); 10 CSR 40-7.031; 10 CSR 40-7.041 (1), (2), and (3); and 10 CSR 40-8.030 (6) and (18) as summarized below:

1. Missouri amends 10 CSR 40-2.090(5)(B) to vest the Director, rather than the Land Reclamation Commission, with the authority to determine when a revegetated area is ready for livestock grazing. This revision would streamline the process of making decisions on requests from operators to graze livestock on areas where the operator's liability for reclamation bond has not been released. This revision would also make this initial rule consistent with the permanent program rules.

2. Missouri amends 10 CSR 40-3.040 and 10 CSR 40-3.200, requirements for protection of the hydrologic balance. Missouri deletes 10 CSR 40-3.040(2)(A)(7) and 10 CSR 40-3.200(2)(A)(7) and adds new subsections 10 CSR 40-3.040(2)(B) and 10 CSR 40-3.200(2)(B) on water quality and effluent limitations for both surface and underground mining to require compliance with applicable State and Federal water quality laws and regulations. Missouri revises subsection 10 CSR 40-3.040(6)(Q) addressing sedimentation ponds to be consistent with OSMRE regulation 30 CFR 816.49(a). Missouri revises subsections 10 CSR 40-3.040(17)(A) and 10 CSR 40-3.200(16)(A) and adds subsection 10 CSR 40-3.040(17)(B) and 10 CSR 40-3.200(16)(B) on stream buffer zones for both surface and underground mining to be consistent with 30 CFR 816.57.

3. Missouri amends 10 CSR 40-3.110(1)(A)3. concerning backfilling and grading requirements to redefine contemporaneous reclamation timeframes.

4. Missouri amends 10 CSR 40-3.120(7)(A)2.A. and 10 CSR 40-3.270(7)(A)2.A. to extend the length of time that revegetation standards must be met for forest land from one growing season to two growing seasons. This revision is in response to condition 925.16(a) that was placed on program amendment 925.15(c).

5. Missouri amends 10 CSR 40-7.011(2)(D). The required bond amount is raised from $500 per acre to $2,500 per acre.

This change is in response, in part, to the January 30, 1986 OSMRE letter written under 30 CFR 732.17(d) concerning the adequacy of the bonding system.

6. Missouri amends 10 CSR 40-7.011(3)(B) to require banks issuing certificates of deposits, posted as bonds, to waive all rights to setoff or liens against those certificates. This revision is in response to condition 925.16(b) that was placed on program amendment 925.15(c).

7. Missouri amends 10 CSR 40-7.011(3)(B) and (C) requiring that notification of the insolvency or bankruptcy of the bank issuing letters of credit be provided to the regulatory authority and the permittee. The regulatory authority is then required to initiate the subsequent chain of events. This revision is in response to condition 925.16(c) that was placed on program amendment 925.15(c).

8. Missouri amends 10 CSR 40-7.021(2)(A) and (C) that deal with release of

Phase I and II bond and reclamation liability for temporary sedimentation structures. This revision is in response to condition 925.16(d) that was placed on program amendment 925.15(c).

9. Missouri amends 10 CSR 40-7.031 concerning permit suspension or revocation, bond forfeiture, and authorization to expend fund monies. The revision of 10 CSR 40-7.031(2) concerning the procedures used to act on a complaint for permit revocation are in response to condition 925.16(e) that was placed on program amendment 925.15(c) The revision of 10 CSR 40-7.031(1) adds a mandatory review of the permittee's history of violations to determine if a pattern of violations exists when a permittee fails to abate a violation or a cessation order.

10. Missouri amends 10 CSR 40-7.041(1) and (2) to raise the reclamation fund ceiling from $3 million to $7 million. Once the fund reaches this ceiling, permittees no longer pay the yearly assessment on the first 100,000 tons of coal sold or otherwise disposed. Should expenditures occur from the fund for reclamation, a surcharge is imposed until the fund reaches the ceiling. This revision also raises the per acre bond from $500 to $2,500 per acre. These revisions are in response to the January 30, 1986 OSMRE letter written under 30 CFR 732.17(d) concerning the adequacy of the bonding system.

11. Missouri amends 10 CSR 40-7.041(3) concerning penalties for delinquent payment of fees to the reclamation fund. This revision requires the Director to assess a 25 cent per ton penalty, in addition to issuing a Notice of Violation (NOV), when payments to the reclamation fund are delinquent. A provision for issuance of a cessation order is also added when this NOV is not abated in the required time. This revision is in response to condition 925.16(f) that was placed on program amendment 925.15(c).

12. Missouri amends 10 CSR 40-8.030(6) and (18) to establish the same cessation order standard for failure to abate a notice of delinquent reclamation as for failure to abate a NOV. Standards are also provided for extension of the 90-day abatement period for notices of delinquent reclamation consistent with 30 CFR 843.12. Language is added clarifying that the penalty of 25 cents per ton of coal may be imposed only in addition to, not in place of, the approved penalty provisions of 10 CSR 40-8.040. These revisions are in response to conditions 925.16(g) and (h) that were placed on program amendment 925.15(c).

On April 30, 1987, OSMRE published a notice in the **Federal Register** (52 FR 15733) announcing receipt of the amendments and inviting public comment on their adequacy. The public comment period ended June 1, 1987. The public hearing, scheduled for May 26, 1987, was not held because no one requested to testify.

III. Director's Findings

Set forth below, pursuant to SMCRA and the Federal regulations at 30 CFR 732.15 and 732.17, are the Director's findings concerning the amendments submitted by Missouri on February 4, 1987. Only those revisions of particular interest are discussed below. Any revisions not specifically discussed below are found to be no less stringent than SMCRA and no less effective than the Federal rules. The director may require further changes in the future as a result of his ongoing review of the Missouri program in light of Federal regulatory revisions and court decisions. Revisions that are not discussed contain language similar to the corresponding Federal rules, concern nonsubstantative wording changes, or involve provisions that lack a Federal counterpart and that do not adversely affect other aspects of the program.

1. Chapter 7—Bond and Insurance Requirements for Surface Coal Mining and Reclamation Operations. On April 13, 1983, Missouri submitted a proposed program amendment consisting of new legislation and rules to implement an alternative bonding system under section 509(c) of the Act (Administrative Record No. MO-253).

The Federal bonding rules at 30 CFR 800.11(e) allow OSMRE to approve an alternative bonding system provided: (1) The alternative must assure that the regulatory authority will have available sufficient money to complete the reclamation plan for any areas that may be in default at any time; and (2) the alternative must provide substantial economic incentive for the permittee to comply with all reclamation provisions.

OSMRE approved Missouri's proposed alternative bonding system on May 8, 1984 (49 FR 19476). On January 30, 1986, OSMRE sent Missouri a letter written under 30 CFR 732.17(d) outlining deficiencies identified in Missouri's alternative bonding system (Administrative Record No. MO-351). This letter was based on a report from the Missouri Land Reclamation Commission (MLRC) dated October 30, 1985, to the Kansas City field office of OSMRE (Administrative Record No. MO-352). The report described conditions indicating that Missouri's alternative bonding system no longer met the requirements of 30 CFR 800.11(e). The MLRC report provided an update on the balance of the Coal Mine Land Reclamation Fund (CMLRF), a report of permits revoked and bonds forfeited, the projected shortcomings of the CMLRF, and a proposed course of action for both strengthening the CMLRF as well as dealing with the necessary reclamation at two defaulted sites.

It was the finding of the Director of OSMRE, based on the above report, that the necessity to phase the reclamation over several years is contrary to the requirement to have available sufficient money to complete the reclamation plan for any areas that may be in default at any time. In accordance with 30 CFR 732.17(d), the Director determined that a State program amendment was necessary to address the adequacy of the alternative bonding system of the Missouri program. The amendment should also outline plans that will resolve the current backlog of forfeiture sites.

Missouri amended sections 444.960 and 444.965 of RSMo 1986 and its regulations at 10 CSR 40-7.041 (1) and (2) to raise the CMLRF ceiling from $3 million to $7 million. This action should have a long term benefit for a more-adequate reclamation fund.

Missouri also amended section 444.950 RSMo 1986 and its regulations at 10 CSR 40-7.011(2) to raise the reclamation performance bond from $500 to $2,500 per acre. The increased bond applies to unbonded acres under new permits, after April 30, 1986, or permits undisturbed as of that date. This five-fold increase in the amount of the reclamation performance bond is a significant improvement to Missouri's alternative bonding system.

The Director finds, based on the above discussion, that the above amendments, as proposed by the State of Missouri, are a significant improvement to Missouri's alternative bonding system. The amendments, as proposed, are an adequate partial response to the OSMRE's letter of January 30, 1986, pursuant to 30 CFR 732.17(d).

IV. Public Comments

The Director solicited public comment on the proposed amendment in the April 30, 1987 **Federal Register** (52 FR 15733). No public comments were received. Since no one made a request to present testimony at the scheduled public hearing, none was held. Pursuant to section 503(b) of SMCRA and § 732.17(h)(10)(i), comments were also solicited from various Federal and State agencies. The U.S. Fish and Wildlife Service (FWS), the U.S. Soil Conservation Service (SCS), and the U.S. Environmental Protection Agency

(EPA) responded to the solicitation but provided no substantive comments on this rule. The EPA concluded (Adminstrative Record No. MO-344) that the proposed amendments to the Missouri program demonstrate the legal authority, administrative capability, and technical conformity to OSMRE regulations necessary to maintain water quality standards promulgated under the authority of the Clean Water Act, as amended (33 U.S.C. 1251 *et seq.*).

V. Director's Decision

The Director, based on the above findings, is approving the proposed amendments submitted by Missouri on February 4, 1987 with respect to the required program amendments placed on the Missouri program at 30 CFR 925.16 (a), (b), (c), (d), (e), (f), (g), and (h) in the May 8, 1984 **Federal Register** (49 FR 19468). OSMRE has determined that the State rules are consistent with the Federal requirements. Accordingly, the Director is eliminating the requirements at 30 CFR 925.16 (a), (b), (c), (d), (e), (f), (g), and (h) for Missouri to amend its program.

The Director is also approving the following proposed amendments at 10 CSR 40-2.090(5)(B); 10 CSR 40-3.040; 10 CSR 40-3.200; and 10 CSR 40-3.110(1)(A)3.

The Director is approving the following proposed amendments as a measure to correct, in part, the deficiencies of Missouri's alternative bonding system at RSMo 1986 444.950; 444.960; 444.965; 10 CSR 40-7.011(2)(D); and 10 CSR 40-7.041 (1) and (2).

VI. Procedural Matters

1. *Compliance with the National Environmental Policy Act.* The Secretary has determined that, pursuant to section 702(d) of SMCRA, 30 U.S.C. 1292(d), no environmental impact statement need be prepared on this rulemaking.

2. *Executive Order No. 12291 and the Regulatory Flexibility Act.* On August 28, 1981, the Office of Management and Budget (OMB) granted OSMRE an exemption from sections 3, 4, 7, and 8 of Executive Order 12291 for action directly related to approval or conditional approval of State regulatory programs. Therefore, for this action OSMRE is exempt from the requirement to prepare a Regulatory Impact Analysis, and this action does not require regulatory review by OMB.

The Director of the Interior has determined that this rule would not have a significant economic effect on a substantial number of small entities under the Regulatory Flexibility Act (5 U.S.C. 601 *et seq.*).

This rule would not impose any new requirements; rather, it would ensure that existing requirements established by SMCRA and the Federal rules would be met by the State.

3. *Paperwork Reduction Act.* This rule does not contain information collection requirements which require approval by the OMB under 44 U.S.C. 3507.

List of Subjects in 30 CFR Part 925

Coal mining, Intergovernmental relations, Surface mining, Underground mining.

James W. Workman,

Deputy Director, Operations and Technical Services, Office of Surface Mining Reclamation and Enforcement.

Date: February 19, 1988.

PART 925—MISSOURI

1. The authority citation of Part 925 continues to read as follows:

Authority: Pub. L. 95-87, Surface Mining Control and Reclamation Act of 1977 (30 U.S.C. 1201 *et seq.*).

2. 30 CFR 925.15 is amended by adding a new paragraph (e) as follows:

§ 925.15 Approval of regulatory program amendments.

* * * * *

(e) The following amendments submitted to OSMRE on February 4, 1987 are approved effective February 26, 1988.

Missouri's rules at 10 CSR 40-2.090(5) concerning methods of revegetation; Missouri's rules at 10 CSR 40-3.040 (2), (6), and (17) concerning water quality standards and effluent limitations, sedimentation ponds, and stream buffer zones; Missouri's rules at 10 CSR 40-3.200 (2) and (16) concerning water quality standards and effluent limitations, and stream buffer zones; Missouri's rules at 10 CSR 40-3.110(1) concerning general backfilling and grading requirements; Missouri's rules at 10 CSR 40-3.120(7) and 10 CSR 40-3.270(7) concerning tree and shrub stocking for forest land, Missouri's rules at 10 CSR 40-7.011 (2) and (3) concerning requirements to file a bond, and types of bond; Missouri's rules at 10 CSR 40-7.021(2) concerning criteria and schedule for release of reclamation liability; Missouri's rules at 10 CSR 40-7.031 concerning permit suspension or revocation, bond forfeiture and authorization to expend reclamation fund monies; Missouri's rules at 10 CSR 40-7.041 (1), (2), and (3) concerning payment of assessments, fund ceiling and reimbursement, and penalties for delinquent payment of fees; Missouri's rules at 10 CSR 40-8.030 (6) and (18) concerning enforcement of cessation orders and delinquency in reclamation; Missouri's statutes at RSMo 1986 444.950, 444.960, and 444.965 concerning the amount of reclamation performance bonds and the reclamation fund ceiling.

§ 925.16 [Amended]

3. 30 CFR 925.16 is amended by removing and reserving paragraphs (a), (b), (c), (d), (e), (f), (g), and (h).

[FR Doc. 88-4118 Filed 2-25-88; 8:45 am]
BILLING CODE 4310-05-M

VETERANS ADMINISTRATION

38 CFR Part 21

Veterans Education; Entitlement Charges for Refresher, Remedial and Deficiency Courses

AGENCY: Veterans Administration.

ACTION: Final regulations.

SUMMARY: Until now Veterans Administration (VA) regulations have not stated how to charge entitlement when a veteran or eligible person is pursuing some courses for which entitlement is charged concurrently with refresher, remedial or deficiency courses for which no charge is made against entitlement. The result has been inconsistent adjudication of cases by the various VA offices. This regulation specifies the manner in which entitlement charges are to be made, thus eliminating the possibility of non-uniform administration of the program.

EFFECTIVE DATE: February 9, 1988.

FOR FURTHER INFORMATION CONTACT: June C. Schaeffer, Assistant Director for Education Policy and Program Administration (225), Vocational Rehabilitation and Education Service, Department of Veterans Benefits, Veterans Administration, 810 Vermont Avenue NW., Washington, DC 20420, (202) 233-2092.

SUPPLEMENTARY INFORMATION: On pages 36280 and 36281 of the **Federal Register** of September 28, 1987, there was published a notice of intent to amend 38 CFR Part 21 to specify the entitlement charge when a veteran receiving benefits under the Vietnam Era GI Bill or an eligible spouse or surviving spouse receiving dependents' educational assistance enrolls in refresher, remedial or deficiency courses concurrently with courses for which entitlement must be charged. Interested people were given 45 days to submit comments, suggestions or objections. The VA received no comments, suggestions or objections. Accordingly,

the agency is making the regulation final.

The VA has determined that this amended regulation does not contain a major rule as that term is defined by E.O. 12291, entitled Federal Regulation. The regulation will not have a $100 million annual effect on the economy, and will not cause a major increase in costs or prices for anyone. It will have no significant adverse effects on competition, employment, investment, productivity, innovation, or on the ability of United States-based enterprises to compete with foreign-based enterprises in domestic or export markets.

The Administrator of Veterans Affairs has certified that this amended regulation will not have a significant economic impact on a substantial number of small entities as they are defined in the Regulatory Flexibility Act (RFA), 5 U.S.C. 601–612. Pursuant to 5 U.S.C. 605(b), the amended regulation, therefore, is exempt from the initial and final regulatory flexibility analyses requirements of sections 603 and 604.

This certification can be made because the regulation affects only individuals. It will have no significant economic impact on small entities, i.e., small businesses, small private and nonprofit organizations and small governmental jurisdictions.

(The Catalog of Federal Domestic Assistance numbers for the programs affected by this regulation are 64.111 and 64.117.)

List of Subjects in 38 CFR Part 21

Civil rights, Claims, Education, Grant programs-education, Loan programs-education, Reporting and recordkeeping requirements, Schools, Veterans, Vocational education, Vocational rehabilitation.

Approved: February 9, 1988.

Thomas K. Turnage,

Administrator.

PART 21—[AMENDED]

In 38 CFR Part 21, Vocational Rehabilitation and Education, § 21.1045 is amended by revising paragraph (c)(1) and by adding paragraph (c)(3) to read as follows:

§ 21.1045 Entitlement charges.

* * * * *

(c) * * *

(1) For all other courses, after making any adjustments required by paragraph (c)(3) of this section, the VA will make a charge against entitlement.

* * * * *

(3) A veteran or eligible spouse or surviving spouse may concurrently enroll in a refresher, remedial or deficiency course or courses for which paragraph (a)(4) of this section requires no charge against entitlement and in a course or courses for which paragraph (b) of this section requires a charge against entitlement. When this occurs, the VA will charge entitlement for the concurrent enrollment based only on pursuit of the course or courses described in paragraph (b) of this section, measured in accordance with §§ 21.4270 through 21.4275 of this part, as appropriate.

(Authority: 38 U.S.C. 1661, 1677(b))

* * * * *

[FR Doc. 88–4153 Filed 2–25–88; 8:45 am]

BILLING CODE 8320-01-M

FEDERAL MARITIME COMMISSION

46 CFR Parts 550 and 580

[Docket No. 85–19]

Tariff Publication of Free Time and Detention Charges Applicable to Carrier Equipment Interchanged With Shippers or Their Agents

AGENCY: Federal Maritime Commission.

ACTION: Final rule.

SUMMARY: The Commission amends its domestic offshore and foreign tariff filing rules to require common carriers to publish in their tariffs the terms and conditions (including free time allowed and detention or similar charges assessed) governing the use of carrier-provided equipment (including cargo containers, trailers and chassis) by shippers or persons acting on the shippers' behalf. Under the rule, if the terms and conditions are fully set forth in an interchange agreement with shippers or their agents, the carrier must publish a specimen copy of the agreement in its tariff. The rule also provides for an exemption from the filing and publication requirements for those interchange agreements that do not affect the terms and conditions governing the use of carrier-provided equipment as stated in the carrier's tariff.

DATE: Effective March 28, 1988.

FOR FURTHER INFORMATION CONTACT:

Robert D. Bourgoin, General Counsel, Federal Maritime Commission, 1100 L Street NW., Washington, DC 20573, (202) 523–5740

Robert G. Drew, Director, Bureau of Domestic Regulation, Federal Maritime Commission, 1100 L Street NW., Washington, DC 20573, (202) 523–5796.

SUPPLEMENTARY INFORMATION: This proceeding was instituted by a Notice of Proposed Rulemaking ("Notice") published in the **Federal Register** (50 FR 32097) in response to a Petition for Rulemaking ("Petition") filed by American President Lines ("APL"). In the Notice, the Commission proposed amendments to 46 CFR 550.5, 580.5 and 580.7 that would require carriers to specify in their tariffs and service contracts the terms and conditions governing the use of carrier-provided equipment by shippers or their agents.[1] The Notice stated that because the terms and conditions for the use of carrier-provided equipment, whether provided directly to the shipper or to inland carriers acting as shippers' agents, affect the ultimate rate paid by the shipper, those terms and conditions appear to fall within the tariff and service contract filing requirements of section 8 of the Shipping Act of 1984 ("1984 Act"), 46 U.S.C. app. 1707, and section 2 of the Intercoastal Shipping Act, 1933 ("1933 Act"), 46 U.S.C. app. 844.

Comments filed in response to the Notice advanced conflicting legal and policy arguments concerning the propriety of the proposed amendments. Specifically, disagreement was voiced over the proposed requirement that negotiated equipment interchange agreements ("EIA's") between ocean common carriers, subject to Commission jurisdiction, be disclosed in ocean common carrier tariffs. Not satisfied that an adequate record had been developed to resolve the legal and policy issues raised, the Commission issued an Amended Notice of Proposed Rulemaking ("Amended Notice"), referring the matter to an Administrative Law Judge to conduct a formal hearing and issue an Initial Decision ("I.D.") recommending a disposition based upon the record developed.

The Amended Notice specified the following issues: (1) Whether the 1984 Act, the Shipping Act, 1916 ("1916 Act"), 46 U.S.C. app. 801, and the 1933 Act require the filing and publication in tariffs of equipment interchange agreements between ocean common carriers and shippers and between ocean common carriers and inland carriers; and (2) if so, whether there exist sufficient policy reasons to exempt such agreements from the Commission's tariff filing requirements pursuant to section 16 of the 1984 Act, 46 U.S.C. app.

[1] The Petition alleged that many carrier tariffs allowed the individual negotiation of free time and detention agreements for carrier-provided equipment. The practice of *ad hoc* negotiation was said to be prevalent in those situations where inland carriers received or tendered cargo on behalf of shippers.

1715, and section 35 of the 1916 Act, 46 U.S.C. app. 833a.

All entities that had filed comments in response to the original Notice were made parties to the proceeding. The Commission's Bureau of Hearing Counsel was also made a party to the proceeding. In addition to the comments filed by the parties in response to the original Notice, further written submissions and responses were filed pursuant to a procedural schedule ordered by presiding Administrative Law Judge Joseph N. Ingolia ("Presiding Officer"). Hearings were held and oral testimony heard, after which briefs were filed.

The Presiding Officer issued a lengthy I.D. finding that the proposed requirements for the inclusion of carrier-provided equipment free time and detention practices in tariffs on file with the Commission were proper as a matter of law and policy. He recommended against any exemption for EIA's. Exceptions to the I.D. and Replies to Exceptions were filed by APL and the Inter-American Freight Conference ("IAFC"). Sea-Land Services, Inc. ("Sea-Land") filed a Reply to Exceptions.

Initial Decision

The Presiding Officer held that the Commission has jurisdiction over the practices of ocean common carriers relevant to the terms and conditions of providing equipment to shippers as part of the common carriers' transportation services. The Commission was also found to have jurisdiction to require the filing and/or publication of EIA's with inland carriers when those agreements affect the rates, charges and practices applied to shippers/consignees.

The Presiding Officer took official notice of free time and detention rules in thirteen conference tariffs. All of these tariffs allow exceptions to the tariff rules for EIA's. The majority of those exceptions provide that the tariffs' free time and detention charges do not apply while the carriers' equipment is under an EIA with an inland carrier. One exception applies at foreign ports and two tariffs require the execution of a "standard" interchange agreement. The practice of ocean carriers entering into EIA's with inland carriers was found to be widespread. The Presiding Officer explained that the specific terms of EIA's are subject to negotiation and often vary widely, depending upon economic factors.

The Presiding Officer recommended that, in order to adequately inform the shipping public of carrier practices that affect shipping terms, the Commission's tariff rules be amended to define "free time and demurrage" and "free time and detention." It was suggested that proposed regulations specify that the terms and conditions of providing the carrier's equipment to shippers/consignees may not be varied by entering into agreements with third parties respecting the same "free time and detention."

The Presiding Officer concluded that no exemption for the filing and publication of EIA's is warranted. However, he suggested that an exemption might be warranted if the carriers' tariffs state that free time and detention rules are not subject to change by EIA's.

Finally, the Presiding Officer agreed with the findings in the Notice that the proposed amendments are not a "major" rule under Executive Order No. 12291, are properly exempted from the Regulatory Flexibility Act, and do not impose excessive burdens as defined by the Paperwork Reduction Act. He noted that alleged errors in the Notice findings were not supported by any sufficient legal or factual matter.

Discussion

The I.D. presents a detailed and comprehensive analysis of the relevant issues in this proceeding and is generally well-reasoned and supported, both as a matter of law and fact. Many of the Exceptions to the I.D. are rearguments of matters raised below that were fully addressed in the I.D. The Commission will not attempt to repeat the analysis of the Presiding Officer beyond that necessary to dispose of these Exceptions. Therefore, for reasons stated below and except as otherwise indicated, the I.D. is adopted by the Commission.

The critical and fundamental issue presented in the Amended Notice is whether an EIA between an ocean common carrier and an inland carrier is a "practice" relating to a "facility under the control of the carrier * * * that in any way change, affect or determine any part or the aggregate of the rates or charges" paid by the shipper within the meaning of section 8(a)(1)(D) of the 1984 Act [2] and section 2 of the 1933 Act. The Presiding Officer correctly found that an EIA is just such a "practice."

IAFC disagrees and again argues on Exceptions that, with the exception of the arrangement between a carrier and a freight forwarder, no arrangement between a carrier and any party other than the shipper need be disclosed in the carrier's tariff. IAFC takes the position that the I.D. did not establish a linkage between an EIA and the amount charged to a shipper or consignee by an ocean or inland carrier, and that, therefore, the cost of these inland transportation charges need not be disclosed in a carrier's tariff.

The record developed by the Presiding Officer establishes that EIA's affect the charges paid by shippers. As was noted in the I.D., many common carrier tariffs on file with the Commission on their face establish a sufficient basis for the proposed regulations. The tariffs specifically provide that stated free time and detention charges for carrier-provided container equipment will differ when such equipment is provided pursuant to an EIA.[3] Because EIA's affect the terms and conditions of transportation provided by the shipper, the Shipping Acts require them to be published in the ocean common carrier's tariff. Accordingly, to the extent they affect shippers, EIA's are subject to the tariff filing requirements of the 1984 Act and the 1933 Act regardless of whether they are primarily agreements with non-shipper third parties.[4]

IAFC also reasserts its argument that the practices of inland carriers that are not the agents of shippers are subject to the jurisdiction of the Interstate Commerce Commission ("ICC"). IAFC concludes that because EIA's cannot be enforced by the Commission, they should not be filed. In reply, APL submits that a finding of an agency relationship with a shipper is not needed so long as the inland carrier is acting on behalf of a shipper. However, to clarify the relationship between the inland carrier and the shipper, APL

[2] The Notice also proposed to amend 46 CFR 580.7(g)(2)(iv) to require the inclusion of free time and detention charges in the "line-haul rate" essential element of service contracts. *See*, section 8(c)(4) of the 1984 Act. However, during the course of this proceeding the Commission amended its service contract regulations in Docket No. 86-6—*Service Contracts*, and adopted language almost identical to section 8(a)(1)(D). *See* 46 CFR 581.5(a)(3)(iii). Accordingly, the Commission's interpretation of section 8(a)(1)(D) of the 1984 Act in this proceeding will also apply to the appropriate provisions of the Commission's service contract regulations. This is also consistent with the legislative history relevant to service contracts under the 1984 Act. That history indicates that with regard to ancillary services and charges, any deviation from the carrier's tariff must be identified in the "line-haul rate" disclosure. *See*, S. Rep. No. 3, 98th Cong., 1st Sess. 31–32 (1983). In light of the foregoing, the Commission does not deem it necessary to amend its existing service contract regulations to specifically include EIA's.

[3] The Presiding Officer took official notice of 13 tariffs on file with the Commission that exempted containers subject to EIA's from otherwise applicable free time and detention rules. (I.D. at 10.)

[4] *Cf., Council of North Atlantic Shipping Associations v. F.M.C.*, 672 F.2d 171, 172 (D.C. Cir.), *cert. denied*, 459 U.S.C. 830 (1982); *United States v. Sea-Land Service, Inc.*, 424 F.Supp. 1008, 1011, 1012 (D.N.J. 1977), *appeal dismissed mem.*, 577 F.2d 730 (3rd Cir. 1978), *cert. denied*, 439 U.S. 1072 (1979).

suggests that the term "or persons acting on behalf of shippers" be substituted for "their agents" in any final rule promulgated in this proceeding.

The Presiding Officer properly held that it does not matter if the inland carrier is technically an "agent" of the shipper or an independent third-party to the transportation arrangement or whether the inland carrier is subject to ICC regulation. The Commission is not asserting jurisdiction over inland carriers or any other third party. The rule proposed in this proceeding is limited to the practices of common carriers subject to Commission jurisdiction.[5] The use of the term "agent" in the proposed rule was intended to apply to situations where carrier-provided equipment is tendered to a third party under an EIA but ultimately is used by a shipper whose freight charges are affected by the terms of the EIA. Accordingly, APL's suggestion that the rule be revised to include within its scope an EIA executed by a person "acting on behalf of a shipper" regardless of whether that person is technically a shipper's agent has merit and will be adopted.

After concluding that EIA's are required to be published as tariff matter, the Presiding Officer proceeded to find that if a carrier's tariff includes terms and conditions applicable to a shipper's use of the carrier's equipment, the carrier may not contract with inland carriers in derogation of those tariff rules. He reasoned that "the ocean carrier cannot purport to rent its equipment to an inland carrier under an EIA or other agreement when in fact that equipment is already part of an agreement between the ocean carrier and the shipper/consignee." (I.D. at 65). Accordingly, he suggested "demurrage" and "detention" definitions that would preclude conflicting equipment rental arrangements and make it unnecessary to file EIA's.

While otherwise supporting the findings and conclusions of the I.D., APL objects to the "demurrage" and "detention" definitions. APL argues that the scope of this proceeding is limited to whether a publication requirement should be imposed and was not intended to include the possible imposition of substantive regulatory requirements. We concur.

The definitions with substantive requirements suggested by the Presiding Officer do go beyond the scope of this proceeding as delineated by the Notice and Amended Notice. While the definitions may be valid, this rulemaking addressed the filing of EIA's and not the contents of the EIA's themselves. Therefore, the regulations proposed in the I.D. that go beyond filing and publication requirements will not be adopted in this proceeding.[6]

The other major issue specified in the Amended Notice is whether EIA's should be exempted from otherwise applicable statutory requirements. IAFC argues that an exemption for EIA's is justified because effective regulation of EIA's would require the filing and publication of massive amounts of information, thereby imposing excessive burdens on the shipping industry and undue governmental interference in commercial transactions. Moreover, the proposed rule is said to be contrary to the underlying purposes of the 1984 Act and other laws declarative of a public policy of minimizing government regulation and burdens on commercial business sectors.[7] We are not persuaned by these challenges.

The Commission agrees with the Presiding Officer that IAFC's allegation of burdensomeness appears to be based upon conclusory arguments unsupported by statistical studies or similar types of substantial evidence.[8] Moreover, general statutory policies of minimizing government regulation should not override the specific statutory requirements stated in sections 8 and 10 of the 1984 Act.[9]

Finally, IAFC argues that exempting EIA's would not "substantially impair effective regulation" or be "unjustly discriminatory" within the meaning of section 16 of the 1984 Act. Although acknowledging that EIA's could be used to confer an advantage or disadvantage on a particular shipper, IAFC maintains that discriminatory use of EIA's is a matter for Commission enforcement activities and should not be addressed by new regulations. We disagree.

Exempting EIA's would not only appear to substantially impair effective regulation but could also result in unjust discrimination. The evidence of actual industry practices reveals that EIA's are negotiated on an individual basis resulting in widely varying terms and conditions affecting shippers.[10] Under these circumstances, the potential for discriminatory treatment between such shippers is high. We therefore concur with the Presiding Officer that public disclosure of these terms and conditions is so basic to the Commission's regulatory responsibilities that it overrides any arguments advanced by proponents of an exemption. For that reason, the Commission cannot make the findings required to support an exemption under section 16.

In summary, the Presiding Officer's conclusion that EIA's should not be exempted from filing and publication requirements is supported by the record. Proponents of an exemption have failed to put forth convincing evidence that would justify an exemption or satisfy the minimum requirements of the statutory exemption provisions.[11] Accordingly, the Commission affirms and adopts the Presiding Officer's finding that an exemption should not be granted in this proceeding except that, to the extent the carriers' tariffs specify that EIA's may not affect the charges to shippers, they need not be filed.

List of Subjects in 46 CFR Parts 550 and 580

Maritime carriers, Rates and fares, Reporting and recordkeeping requirements.

Therefore, pursuant to 5 U.S.C. 553; secs. 8, 9, 10, and 17 of the Shipping Act of 1984 (46 U.S.C. app. 1707, 1708, 1709, and 1716); secs. 18(a) and 43 of the Shipping Act, 1916 (46 U.S.C. app. 817(a) and 841a); and sec. 2 of the Intercoastal Shipping Act, 1933 (46 U.S.C. app. 844), the Federal Maritime Commission amends Parts 550 and 580 of Title 46 of the Code of Federal Regulations as follows:

PART 550—[AMENDED]

1. The authority citation for Part 550 is revised to read:

Authority: 5 U.S.C. 553; 46 U.S.C. app. 812, 814, 815, 817(a), 820, 833a, 841, 843, 844, 845a and 847.

[5] *See, Alabama Great Southern R.R. Co. v. F.M.C.*, 379 F.2d 100 (D.C. Cir. 1967).

[6] IAFC takes issue with the I.D.'s suggestion that EIA's with inland carriers should be prohibited with respect to containers specified for a given shipper. Because the substantive requirements suggested by the Presiding Officer will not be adopted, this challenge is mooted and need not be addressed.

[7] The contentions of the North European Conferences advanced before the Presiding Officer that the proposed rule was inconsistent with section 2 of the 1984 Act, the Regulatory Flexibility Act, 5 U.S.C. 601–612, the Paperwork Reduction Act, 44 U.S.C. 3501–3520, and Executive Order No. 12291, appear to have been abandoned on appeal. Neither the Conferences nor any other party have taken exception to the finding in the I.D. that these authorities were not violated.

[8] *See*, Original Joint Submission of North European Conferences, Affidavit of Mr. Harvey M. Flitter at 31–32; I.D. at 68–70; On Exceptions, IAFC cited no evidence in support of its allegations of burdensomeness.

[9] *See, Association of American Railroads v. Costle*, 562 F.2d 1310, 1316 (D.C. Cir. 1977).

[10] *See*, Original Joint Submission of North European Conferences; Affidavit of Mr. Harvey M. Flitter at 15–18; I.D. at 24, 71.

[11] *See*, section 16 of the 1984 Act, section 35 of the 1916 Act; *see also*, Amended Notice at 3, n.3.

2. In § 550.1 add a new paragraph (h) to read as follows:

§ 550.1 Exemptions.

* * * * *

(h) Equipment-Interchange Agreements between common carriers subject to this part and inland carriers, where such agreements are not referred to in the carriers' tariffs and do not affect the tariff rates, charges or practices of the carriers.

3. In § 550.5 add a new paragraph (b)(8)(xvii) as follows:

§ 550.5 Contents of tariffs.

* * * * *

(b) * * *

(8) * * *

(xvii) *Use of carrier equipment.* Tariffs shall state the terms and conditions (including free time allowed and detention or similar charges assessed) governing the use of carrier-provided equipment (including cargo containers, trailers, and chassis) by shippers. If such terms and conditions are fully set forth in an equipment interchange agreement, either in whole or in part, that the carrier requires be executed by such shippers or persons acting on behalf of such shippers, a copy of such agreement shall be filed in accordance with paragraph (b)(8)(vii) of this section.

* * * * *

4. In § 550.5 change the reference in the first sentence of paragraph (b)(9) to "number 18."

PART 580—[AMENDED]

5. The authority citation for Part 580 continues to read:

Authority: 5 U.S.C. 553; 46 U.S.C. app. 1702–1705, 1707, 1709, 1712, 1714–1716 and 1718.

6. In § 580.1, add a new paragraph (c)(8) to read as follows:

§ 580.1 Exemptions and exclusions.

* * * * *

(c) * * *

(8) Equipment-Interchange Agreements between common carriers subject to this part and inland carriers, where such agreements are not referred to in the carriers' tariffs and do not affect the tariff rates, charges or practices of the carriers.

7. In § 580.5 add a new paragraph (d)(21) to read as follows:

§ 580.5 Tariff contents.

* * * * *

(d) * * *

(21) *Use of carrier equipment.* Tariffs shall state the terms and conditions (including free time allowed and detention or similar charges assessed) governing the use of carrier-provided equipment (including cargo containers, trailers, and chassis) by shippers. If such terms and conditions are fully set forth in an equipment interchange agreement, either in whole or in part, that the carrier requires be executed by such shippers or persons acting on behalf of such shippers, a copy of such agreement shall be filed in accordance with paragraph (d)(8) of this section.

* * * * *

By the Commission.

Joseph C. Polking,

Secretary.

[FR Doc. 88–4166 Filed 2–25–88; 8:45 am]

BILLING CODE 6730-01-M

DEPARTMENT OF COMMERCE

National Oceanic and Atmospheric Administration

50 CFR Part 651

[Docket No. 80223-8023]

Northeast Multispecies Fisheries

AGENCY: National Marine Fisheries Service (NMFS), NOAA, Commerce.

ACTION: Emergency interim rule.

SUMMARY: The Secretary of Commerce has determined that an emergency rule is necessary to establish a regulated mesh area for the Nantucket Shoals by amending the Fishery Management Plan for the Northeast Multispecies Fishery (FMP). The intended effect of this action is to reduce fishing effort and mortality on juvenile Atlantic cod stocks found in high concentrations in this area at this time.

EFFECTIVE DATES: February 23, 1988 through March 31, 1988.

ADDRESS: A copy of the environmental assessment for this rule may be requested from the New England Fishery Management Council, Suntaug Office Park, 5 Broadway (Route 1), Saugus, Massachusetts 01906.

FOR ADDITIONAL INFORMATION CONTACT: Jack Terrill, 617–281–3600 ext. 252.

SUPPLEMENTARY INFORMATION: This notice of emergency action was prepared by NMFS at the request of the New England Fishery Management Council by a vote taken at its January 1988 meeting. This action is being implemented using emergency authority provided to the Secretary under section 305(e)(2)(B) of the Magnuson Fishery Conservation and Management Act, 16 U.S.C 1855(e)(2)(B).

The purpose of this action is to establish a regulated mesh area encompassing an area of Nantucket Shoals, with an allowable mesh of 5.5 inches or greater, until March 31, 1988. The intent is to prevent the harvesting and subsequent mortality of juvenile Atlantic cod stocks which reduce the potential level of spawning stock.

Reports on the high incidence of juvenile cod discards and mortality in the Nantucket Shoals area were brought to the Council by representatives of the Southern New England fishing industry along with a request for establishment of conservation measures in the area. There were similar reports last year for the same area and the same time of year. These reports were verified by State of Massachusetts personnel during February and March 1987 and again in December. For the February-March time period they found up to 30 vessels taking small cod (length 14 to 17 inches) in tows of 5,000 to 10,000 pounds of cod with a discard rate of 70 to 80 percent of the catch. At that time, the minimum legal size for cod was 17 inches. When the State investigated again in December, they found decreased effort with lower catch rates, with a discard percentage of 50 percent. Effective October 1, 1987, regulations implementing Amendment 1 to the FMP raised the minimum size limit for cod to 19 inches. Test tows made by industry during December found significant numbers of cod in the range of 10 to 14 inches on Nantucket Shoals.

A total area closure as an alternative to implementing the 5.5-inch mesh area was discussed and analyzed with the results presented in the environmental assessment prepared by the Council. While a closed area would be easier to enforce, it would not be necessary to achieve the desired results. Test tows conducted by industry with 5.5-inch mesh retained no sublegal cod. The short-term economic loss resulting from a total area closure would be greater than that from the establishment of a regulated mesh area.

The other alternative is a status quo. However, excessive mortality of juvenile cod is anticipated if the pattern of last year repeats itself with intense fishing pressure occurring in late February and part of March. Long term benefit to the fishery is decreased by the mortality of young fish that are potential spawning stock. Excessive mortality of juvenile fish reduces the number of fish that will survive to a harvestable size and that will provide future stock.

The designated area for this emergency rule is adjacent to the Georges Bank regulated mesh area defined in § 651.20(a)(1). It was derived from information provided to the Council by the States of Massachusetts

and Rhode Island and the Southern New England Fishing industry. Based on observations of the occurrence and duration last year of the juvenile cod in this area, the March 31, 1988, ending date was chosen. Traditional small-mesh fisheries for whiting, squid, and winter flounder occur after the ending date and will not be affected by this action.

This final rule does not contain policies with federalism implications sufficient to warrant preparation of a federalism assessment under Executive Order 12612.

Classification

The Assistant Administrator for Fisheries, NOAA, has determined that this rule is necessary to respond to an emergency situation and is consistent with the Magnuson Act and other applicable law.

The Assistant Administrator also finds that, due to the possibility of high mortality of juvenile Atlantic cod in the area, the reasons justifying promulgation of this rule on an emergency basis make it impracticable and contrary to the public interest to provide notice and opportunity for comment, or to delay for 30 days its effective date, under section 553 (b) and (d) of the Administrative Procedure Act.

The Assistant Administrator has determined that this rule does not directly affect the coastal zone of any State with an approved coastal zone management program.

This emergency rule is exempt from normal review procedures of Executive Order 12291 as provided in section 8(a)(1) of that Order. This rule is being reported to the Director of the Office of Management and Budget, with an explanation of why it is not possible to follow the procedures of that order.

The Assistant Administrator finds no potential negative impact on the groundfish resources as a result of this change. An environmental assessment is available at the address above which explains the projected effects of the rule and finds that it has no significant impact on the human environment under the National Environmental Policy Act.

This action does not contain a collection of information requirement subject to the Paperwork Reduction Act.

This emergency action is exempt from the procedures of the Regulatory Flexibility Act because it is being issued without opportunity for prior public comment.

List of Subjects in 50 CFR Part 651

Fisheries.

Dated: February 23, 1988.

James E. Douglas, Jr.,

Deputy Assistant Administrator For Fisheries, National Marine Fisheries Service.

For the reasons stated in the preamble, 50 CFR Part 651 is amended as follows:

PART 651—NORTHEAST MULTISPECIES FISHERY

1. The authority citation for Part 651 continues to read as follows:

Authority: 16 U.S.C. 1801 *et seq.*

2. In § 651.20, paragraph (b)(1) is suspended from February 23, 1988 through March 31, 1988, and new paragraphs (a)(3) and (b)(4) and Figure 5 are added to be effective from February 23, 1988 through March 31, 1988, to read as follows:

§ 651.20 Regulated mesh area and gear limitations.

(a) * * *

(3) *Nantucket Shoals regulated mesh area* (Figure 5):

Bounded by straight lines connecting the following points in the order stated:

Point	Latitude, longitude	Loran C bearings
NS1	41°24.0′ N., 69°59.0′ W.	9960-Y-43850 and 69°59′ W.
NS2	41°28.0′ N., 69°40.0′ W.	9960-Y-43850 and 69°40′ W.
NS3	40°56.5′ N., 69°40.0′ W.	9960-Y-43650 and 69°40′ W.
NS4	40°51.5′ N., 70°14.0′ W.	9960-Y-43650 and 9960-X-25175.
NS5	41°00.0′ N., 70°17.5′ W.	9960-X-25175 and 41°00′ N.
NS6	41°10.0′ W., 70°19.0′ N.	9960-X-25175 and 41°10′ N.
NS7	41°15.5′ N., 70°18.5′ W.	9960-X-25175 and 41°15.5′ N.

and then to NS1 following the seaward limit of the territorial sea.

Note: Loran lines are included for the convenience of fishermen. They are not to be relied upon for determining position for enforcement purposes.

(b) * * *

(4) *Diamond mesh.* Expect as provided for in §§ 651.20(b)(3), 651.20(d), and 651.22, the minimum mesh size for any trawl net, including midwater trawls, or Scottish seine used by a vessel fishing in the mesh areas described in paragraphs (a)(1), (a)(2) and (a)(3) of this section is 5½ inches for at least 75 continuous meshes forward of the terminus of the net (Figure 4).

* * * * *

BILLING CODE 3510-22-M

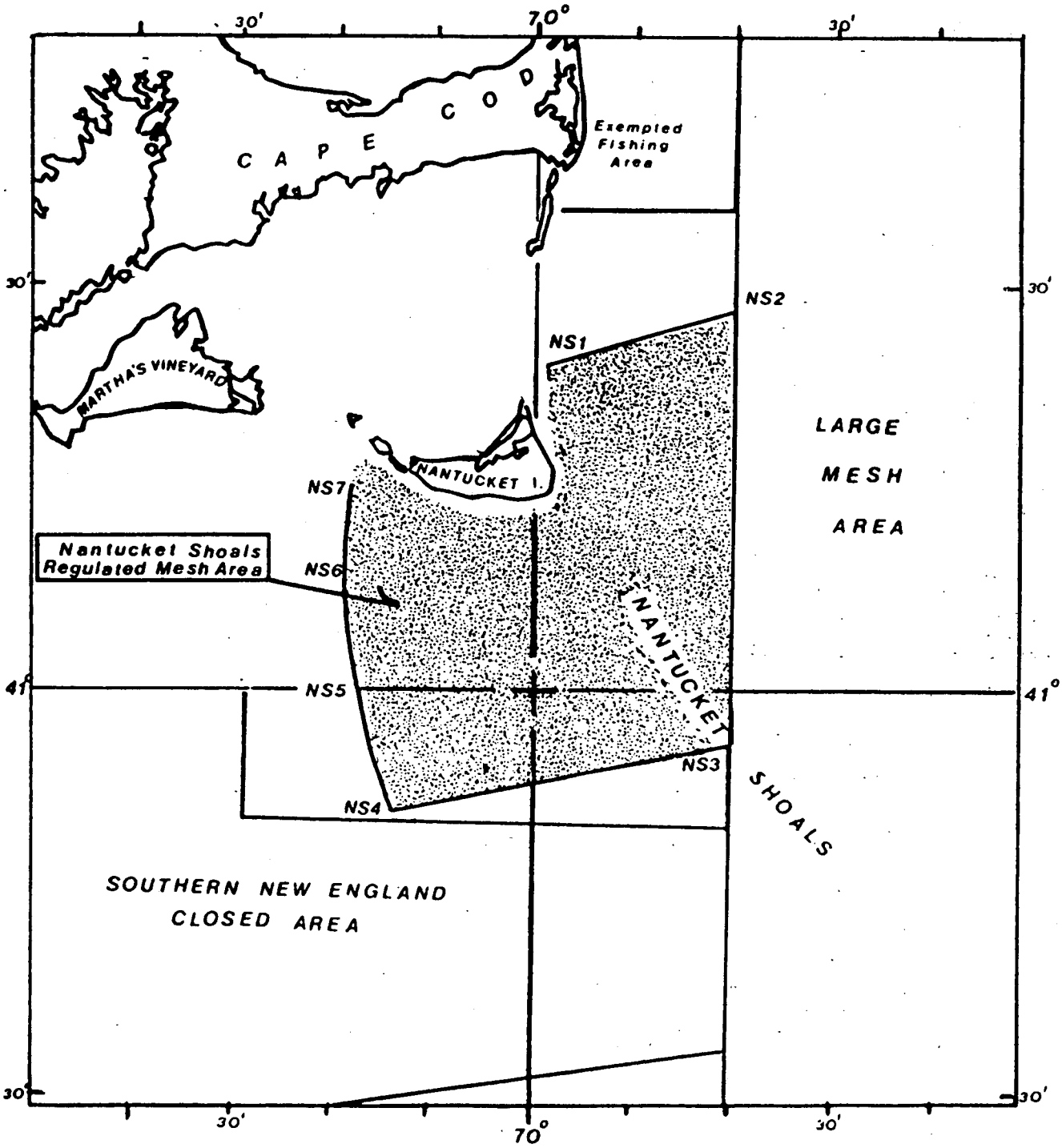

Figure 5. Nantucket Shoals Regulated Mesh Area

[FR Doc. 88-4175 Filed 2-23-88; 4:52 pm]

BILLING CODE 3510-22-C

Proposed Rules

Federal Register
Vol. 53, No. 38
Friday, February 26, 1988

This section of the FEDERAL REGISTER contains notices to the public of the proposed issuance of rules and regulations. The purpose of these notices is to give interested persons an opportunity to participate in the rule making prior to the adoption of the final rules.

DEPARTMENT OF AGRICULTURE

Agricultural Marketing Service

7 CFR Parts 916 and 917

Nectarines, Fresh Pears, Plums, and Peaches Grown in the State of California; Amendments to the Direct Sales Exemption Regulations

AGENCY: Agricultural Marketing Service, USDA.

ACTION: Proposed rule.

SUMMARY: This proposed rule invites comments on changes in the direct home use sales exemption regulations established under the nectarine and the pear, plum, and peach marketing orders. The changes would: (1) Bring the quantities of nectarines, plums, and peaches that can be handled free of certain program requirements under that exemption more in line with the quantities that would normally be used for home use; and (2) clarify the language of the exemption to avoid possible misunderstandings within the affected industries as to the quantities that can be handled under the exemption.

DATES: Comments must be received by March 28, 1988.

ADDRESS: Interested persons are invited to submit written comments concerning this proposal. Comments must be sent in triplicate to the Docket Clerk, Fruit and Vegetable Division, AMS, USDA, P.O. BOX 96456, Room 2085-S, Washington, DC 20090-6456. Comments should reference the date and page number of this issue of the **Federal Register** and will be available for public inspection in the Office of Docket Clerk during regular business hours.

FOR FURTHER INFORMATION CONTACT: Jerry Brown, Marketing Order Administration Branch, Fruit and Vegetable Division, AMS, USDA, P.O. Box 96456, Room 2525-S, Washington, DC 20090-6456; telephone 202-475-5464.

SUPPLEMENTARY INFORMATION: This rule is proposed under Marketing Order Nos. 916 (7 CFR Part 916) and 917 (7 CFR Part 917), regulating the handling of nectarines and fresh pears, plums, and peaches grown in California, respectively. These orders are effective under the Agricultural Marketing Agreement Act of 1937, as amended (7 U.S.C. 601-674), hereinafter referred to as the Act.

This rule has been reviewed under Executive Order 12291 and Department Regulation 1512-1 and has been determined to be a "non-major" rule under criteria contained therein.

Pursuant to requirements set forth in the Regulatory Flexibility Act (RFA), the Administrator of the Agricultural Marketing Service (AMS) has considered the economic impact of this proposed rule on small entities.

The purpose of the RFA is to fit regulatory actions to the scale of business subject to such actions in order that small businesses will not be unduly or disproportionately burdened. Marketing orders issued pursuant to the Act, and rules issued thereunder, are unique in that they are brought about through group action of essentially small entities acting on their own behalf. Thus, both statutes have small entity orientation and compatibility.

There are approximately 649 handlers of nectarines, plums, and peaches subject to regulations under marketing orders, and approximately 2,032 producers in the regulated area. Small agricultural producers have been defined by the Small Business Administration (13 CFR 121.2) as those having annual gross revenues for the last three years of less than $500,000, and small agricultural service firms are defined as those whose gross annual receipts are less than $3,500,000. The majority of handlers and producers may be classified as small entities.

Section 916.110(b) of the nectarine regulations specifies conditions which must be followed to handle nectarines exempt from certain requirements, including grade, size, inspection, container, marking, and assessment regulations. Section 917.143 of the regulations for pears, plums, and peaches specifies similar conditions and exemptions for these three commodities. Among other things, maximum weight limitations are specified. For nectarines, the quantity sold for home use and not for resale to any one person during any one day cannot exceed 200 pounds. For pears, plums, and peaches, the quantity shipped cannot exceed 200 pounds to any one person during any one day. These purchases also must be for home use and cannot be resold.

Under these exemption requirements, a handler could sell a family of four 800 pounds each of nectarines, plums, pears, and peaches in any one day. The Nectarine Administrative Committee, and the Plum and Peach Commodity Committees assert that that amount of fruit is excessive for home use sales in view of the intent of these exemption provisions. The intent is to help small growers by permitting them to sell such fruit directly to the consumers at the premises where the fruit is grown, at a nearly packing house, retail stand, or at certified farmers' markets.

Under the committees' recommendations, the poundage limitation would be determined on a per vehicle rather than on a per person basis. Hence, a family of four using the family car could only purchase 200 pounds of each fruit in a day, rather than 800 pounds each under the current exemption requirements.

For perspective concerning the adequacy of the recommended poundage limitation, it should be noted that the annual per capita consumption (in pounds) in 1985 of fresh nectarines, peaches, and plums and prunes was 1.68, 3.99 and 1.53, respectively. Hence, according to the committees, the recommendation would still provide more than enough fruit to meet the home use needs of local consumers and would not have an adverse impact on those growers who find handling fruit for home use under these exemptions attractive. The proposed change to a poundage limitation of 200 pounds based on one vehicle per day is consistent with the intent of the minimum quantity exemption authority.

This proposal would also clarify the roadside sales rule exemption for plums, and peaches by specifically stating that the maximum poundage of 200 pounds applies to each fruit separately. This action is not necessary for the nectarine regulation since it covers only one commodity. The change was recommended by the peach and plum committees to avoid misinterpretation of the rule to mean that the 200-pound limit is a combined total for all three fruits covered by the regulation.

The basis for the poundage limitation of one person per day for pears will not

be changed. The Department would consider such a change in the event of a recommendation from the Pear Commodity Committee.

Therefore, the Department's view is that the proposed quantity limitations for each of the affected commodities are more than adequate for home usage, they would not lessen the use of the roadside sales exemption by local consumers and growers, and that the proposal would have little, if any, impact on industry operations. Based on the above, the Administrator of the AMS has determined that the issuance of this proposed rule would not have a significant economic impact on a substantial number of small entities.

List of Subjects in 7 CFR Parts 916 and 917

Marketing agreements and orders, Nectarines, Pears, Plums, Peaches, California.

For the reasons set forth in the preamble, 7 CFR Parts 916 and 917 are proposed to be amended as follows:

1. The authority citation for 7 CFR Parts 916 and 917 continues to read as follows:

Authority: Secs. 1–19, 48 Stat. 31, as amended; 7 U.S.C. 601–674.)

PART 916—NECTARINES GROWN IN CALIFORNIA

2. Section 916.110 is amended by revising paragraph (b)(3) to read as follows:

§ 916.110 Exemption.

* * * * *

(b) * * *

(3) The net weight of such nectarines to any one vehicle during any one day does not exceed 200 pounds.

* * * * *

PART 917—FRESH PEARS PLUMS, AND PEACHES GROWN IN CALIFORNIA

3. Section 917.143 is amended by revising paragraph (b)(3) to read as follows:

§ 917.143 Exemption.

* * * * *

(b) * * *

(3) The shipment does not exceed 200 pounds of plums and 200 pounds of peaches to any one vehicle during any one day, and does not exceed 200 pounds of pears to any one person during any one day.

* * * * *

Dated: February 23, 1988.

Robert C. Keeney,

Deputy Director, Fruit and Vegetable Division, Agricultural Marketing Service.

[FR Doc. 88–4114 Filed 225–88; 8:45 am]

BILLING CODE 3410-02-M

---

7 CFR Part 1032

[Docket No. AO-313-A36]

Milk in the Southern Illinois Marketing Area; Decision on Proposed Amendments to Marketing Agreement and to Order

AGENCY: Agricultural Marketing Service, USDA.

ACTION: Proposed rule.

SUMMARY: This decision concludes that the Southern Illinois marketing area should be expanded to include the City of St. Louis, 12 eastern Missouri counties, and part of St. Clair County, Illinois. Expansion to include this territory, which represents the St. Louis portion of the former St. Louis-Ozarks marketing area, reflects structural changes in the market that occurred as a result of the termination of the St. Louis-Ozarks order and is necessary to recognize the primary sales area of the currently regulated plants. Other major changes adopted herein pertain to the pricing of milk in the vicinity of Quincy, Illinois, the standards for regulating plants and the amount and manner in which milk of dairy farmers may be shipped to manufacturing plants and still be priced under the order. Such changes are necessary to promote the orderly and efficient marketing of milk by producers and handlers and are based on the record of a public hearing held on December 9–11, 1986, at Bridgeton, Missouri. Cooperative associations will be polled to determine whether producers favor the issuance of the amended order.

FOR FURTHER INFORMATION CONTACT: John F. Borovies, Marketing Specialist, USDA/AMS/Dairy Division, Order Formulation Branch, Room 2968, South Building, P.O. Box 96456, Washington, DC 20090–6456, (202) 447–2089.

SUPPLEMENTARY INFORMATION: This administrative action is governed by the provisions of Sections 556 and 557 of Title 5 of the United States Code and, therefore, is excluded from the requirements of Executive Order 12291.

The Regulatory Flexibility Act (5 U.S.C. 601–612) requires the Agency to examine the impact of a proposed rule on small entities. Pursuant to 5 U.S.C. 605(b), the Administrator of the Agricultural Marketing Service has certified that this action will not have a significant economic impact on a substantial number of small entities. The amendments are necessary to recognize the sales area of currently regulated plants and to promote orderly and efficient marketing of milk by producers and regulated handlers and are not expected to change the regulatory status of any handler.

Prior documents in this proceeding:

Notice of Hearing: Issued November 18, 1986; published November 21, 1986 (51 FR 42109).

Emergency Partial Decision: Issued January 20, 1987; published January 23, 1987 (52 FR 2537).

Order Amending Order: Issued January 28, 1987; published February 3, 1987 (52 FR 3215).

Recommended Decision: Issued November 9, 1987; published November 13, 1987 (52 FR 43590).

Preliminary Statement

A public hearing was held upon proposed amendments to the marketing agreement and the order regulating the handling of milk in the Southern Illinois marketing area. The hearing was held, pursuant to the provisions of the Agricultural Marketing Agreement Act of 1937, as amended (7 U.S.C. 601–674), and the applicable rules of practice (7 CFR Part 900), at Bridgeton, Missouri, on December 9–11, 1986. Notice of such hearing was issued on November 18, 1986, and published on November 21, 1986 (51 FR 42109).

Upon the basis of the evidence introduced at the hearing and the record thereof, the Administrator, on November 9, 1987, filed with the Hearing Clerk, United States Department of Agriculture, his recommended decision containing notice of the opportunity to file written exceptions thereto.

The material issues, findings and conclusions, rulings, and general findings of the recommended decision are hereby approved and adopted and are set forth in full herein, subject to the following modifications:

1. Under issue number 1, two paragraphs are added after the 39th paragraph.

2. Under issue number 3, two paragraphs are added at the end of the issue.

3. Under issue number 4, one paragraph is added after the 13th paragraph.

4. Under issue number 5, one paragraph is added at the end of the issue.

5. Under issue number 6, one paragraph is added at the end of the issue.

6. Under issue number 7, two paragraphs are added at the end of the issue.

7. Under issue number 8, one paragraph is added after the 8th paragraph.

8. Under issue number 9, the last paragraph is modified and three paragraphs are added:

The material issues on the record of hearing relate to:

1. Expansion of the marketing area.
2. Performance standards for pool plants.
3. Regulation of distributing plants that qualify as pool plants under more than one order.
4. Definition of producer milk.
5. Classification of certain fluid milk products and biscuit mix.
6. Shrinkage and loss product allowance.
7. Location adjustments.
8. Seasonal payment plan for producers.
9. Definition of inventory.
10. Miscellaneous and conforming changes.
11. Omission of a recommended decision and the opportunity to file written exceptions thereto with respect to material issue number 3.

This decision deals with issues 1 through 10. Issues 3 and 11 were previously considered in an emergency partial decision and the order was amended effective February 1, 1987. However, issue 3 is reevaluated herein in view of the expansion of the marketing area considered in issue 1.

Findings and Conclusions

The following findings and conclusions on the material issues are based on evidence presented at the hearings and record thereof:

1. *Expansion of the marketing area.* The Southern Illinois marketing area should be expanded to include adjacent territory in Illinois and Missouri that was included within the marketing area of the St. Louis-Ozarks order that was terminated effective April 1, 1985. This territory includes the city of St. Louis, 12 Missouri counties (Bollinger, Cape Girardeau, Crawford, Franklin, Jefferson, Perry, St. Charles, St. Louis, St. Francois, Ste. Genevieve, Warren, and Washington) and the portion of St. Clair County, Illinois (the city of Belleville, Scott Air Force Base, and Canteen, Centreville, East St. Louis, and Stites Townships) that is not now included in the Southern Illinois marketing area. A proposal to further expand the Southern Illinois marketing area to include additional territory in central Missouri should not be adopted at this time.

The new territory, which has a population in excess of 2.1 million, should be added to the Southern Illinois marketing area since it is a primary sales area of handlers who are currently regulated under the Southern Illinois order and who operate plants located in Illinois and Missouri. Such territory should be included in the Southern Zone of the marketing area for pricing purposes to maintain the current level of pricing that applies at distributing plants in the area under the Southern Illinois order. As a result of the marketing area expansion, the Southern Illinois marketing area should be redesignated as the Southern Illinois-Eastern Missouri marketing area.

Mid-America dairymen, Inc. (Mid-Am), a cooperative association that represents about one-half of the dairy farmers who supply the Southern Illinois market, proposed the marketing area expansion that is adopted herein. Mid-Am testified that the territory should be included in the marketing area since it is a major population center that is a primary sales area of plants that are currently regulated under the order. Mid-Am testified that when the St. Louis-Ozarks order was terminated, five distributing plants in the St. Louis metropolitan area became regulated under the Southern Illinois order. However because the vast majority of the fluidf milk sales of such handlers is in the now unregulated St. Louis area, Mid-Am contends that the potential exists for one or more of these plants to become unregulated or regulated under another order. If any of the plants were to be come unregulated, Mid-Am contends that disorderly marketing conditions would result since any unregulated plant would have a competitive advantage over regulated plants that are subject to classified pricing. To the extent that any of the plants were to become regulated under another order, Mid-Am contends that Class I prices to handlers and blend prices payable to producers would vary significantly among competing plants and jeopardize the ability of certain plants to obtain adequate supplies of milk. (This latter issue of determining where a plant should be regulated if it meets the regulatory standards of more than one order was dealt with on a preliminary basis in an emergency partial decision on the record of this proceeding. The issue is reevaluated under issue number 3 in view of the marketing area expansion recommended in this decision.)

Mid-Am testified that virtually all of the fluid milk sales in its proposed expansion area are made by plants that are regulated under the Southern Illinois order, and that the remaining minor proportion of sales are made by one plant regulated under the Southwest Plains order and one plant regulated under the Paducah, Kentucky order. Thus, Mid-Am testified that all of the sales in the area are made by currently regulated plants and that no additional plants would become regulated under the Southern Illinois order as a result of the adoption of its proposal.

Mid-Am's proposal was generally supported by Associated Milk Producers, Inc. (AMPI) and the National Farmers Organization (NFO), two cooperative associations that also represent producers who supply the market. There was no opposition by any interested party to Mid-Am's proposal.

Packet Dairy, Inc. (Packet), a handler who operates a distributing plant that is regulated under the Southern Illinois order, also supported Mid-Am's proposal. Packet also proposed that the Southern Illinois marketing area be further expanded to include an additional 12 Missouri counties (Audrain, Boone, Callaway, Cole, Gasconade, Lincoln, Maries, Miller, Montgomery, Osage, Phelps, and Pulaski). Packet testified that this area, which has a population of about 400,000, contains the fastest growing population centers in the State. In this regard Packet testified that Boone (Columbia) and Cole (Jefferson City) Counties, which represent about 42 percent of the total 12-county area population, experienced a populatioah growth of about 24 percent between 1970 and 1980.

Packet testified that the fluid milk needs of the area are supplied by handlers who are regulated under the Southern Illinois, Southwest Plains and Greater Kansas City orders and by the Central Dairy Co., an unregulated handler who operates a plant at Jefferson City. Packet estimated that 31 to 51 percent of total fluid milk sales in Boone County are supplied by Southern Ilinois order handlers; 18 to 33 percent by Kansas City order handlers; and the remainder by Central Dairy. In Cole County, Packet estimated that the proportion of total fluid milk sales by handlers are as follows: Southern Illinois, 22–34 percent; Kansas City, 17–28 percent; Southwest Plains, 3–5 percent; and Central Dairy the remainder. In addition, Packet testified that about 10 percent of its total fluid milk sales are made in the 12-county area.

Packet testified that its marketing area expansion proposal should be adopted in order to fully regulate Central Dairy. Packet contends that Central Dairy, who is not required to

pay the Class I price for milk in fluid uses, has a competitive advantage over regulated handlers who are required to pay for milk on the basis of how it is used. Packet contends that, in order to procure a supply of milk, Central Dairy would have to pay dairy farmers prices that are comparable to the Federal order blend price that is applicable to producers who supply the Southern Illinois market. Thus, Packet concludes that Central Dairy's price advantage for milk in Class I (fluid) uses is at least the difference between the Southern Illinois order minimum Class I and blend prices. Assuming an average difference of 60 cents per hundredweight, Packet concludes that Central Dairy's advantage over regulated handlers is between 250 and 290 thousand dollars per year. In addition, Packet notes that such advantage is the amount that would accrue to all dairy farmers who supply the Southern Illinois market if Central Dairy were regulated.

In its brief, Packet contends that Central Dairy's price advantage over regulated handlers averaged $1.11 per hundredweight and ranged from 92 cents to $1.45 over the period from May 1985 to October 1986. According to Packet, such price advantage is a function of both classified pricing and the prices for milk that are charged by Mid-Am in excess of minimum order prices.

Packet also testified that milk that is produced in the 12-county area is used to supply the fluid milk needs of Central Dairy and handlers that are regulated under the Southern Illinois and Southwest Plains orders. Thus, Packet concludes that the 12-county area is further related to the Southern Illinois market because of the overlapping of milk procurement in the area. In addition, Packet contends that the reserve milk supplies that are necessary to balance Central Dairy's fluid milk needs regulated under the Southern Illinois or Southewest Plains orders. Consequently, Packet contends that Federal order producers carry the burden of balancing Central Dairy's fluid milk needs without sharing fully in the benefits that accrue from Central Dairy's fluid milk sales.

NFO supported Packet's proposal on the basis that adoption of the proposal would promote equity among handlers and producers. NFO's primary concern is that Federal order producers balance the fluid milk needs of Central Dairy without receiving the benefit of Central Dairy's fluid milk sales. AMPI testified that it would suport the proposal if Central Dairy's Class I utilization was in excess of the market's Class I utilizatioan. In its brief, Safeway Stores, Inc., a handler regulated under the Greater Kansas City order who has sales in the proposed area, supported Packet's proposal. Safeway concludes that Central Dairy has a competitive advantage over other handlers because of its procurement cost of milk relative to that of regulated handlers and because the Southern Illinois and Southwest Plains Federal order markets carry the reserve supplies of milk for Central Dairy.

Mid-Am testified that it had no position on Packet's marketing area proposal and that Mid-Am was not convinced that there was any marketing problem associated with Central Dairy's unregulated status. Mid-Am testified that competitive and equity problems are inherently present when competition for fluid milk sales occurs between regulated and unregulated plants. However, Mid-Am testified that since Central Dairy's Class I utiliation was not know, the extent to which Central Dairy may have a competitive advantage over regulated handlers cannot be determined. Mid-Am also testified that it supplies the total milk needs of Central Dairy and that it charges Central Dairy the Southern Illinois blend price applicable at St. Louis plus the over-order charge that is applicable to St. Louis area handlers for milk in Class I use. Mid-Am also testified that during the fall months supplemental shipments of milk are made to Central Dairy from Mid-Am plants that are regulated under either the Southern Illinois or Southwest Plains order.

In its brief, Mid-Am supported Packet's marketing area proposal that would result in fully regulating Central Dairy. Mid-Am concludes that Central Dairy has a pricing advantage as a result of information contained in the record relative to Central Dairy's Class I utilization. In addition, Mid-Am notes that a second high-Class-I-use unregulated handler (Deters All-Star Dairy, Inc., at Quincy, Illinois) that purchases milk on the basis of the Southern Illinois blend price has sales in part of the 12-county area. Furthermore, Mid-Am notes that a third unregulated handler (Temple Stevens) is in the process of opening a bottling plant at Columbia, Missouri. Under these circumstances, Mid-Am contends that the only method of providing equity in pricing among competing handlers is to extend Federal regulation to the central Missouri area by adopting Packet's proposal.

Central Dairy testified in opposition to Packet's proposal. Central testified that 85 percent of its total milk sales are in 11 of the 12 counties proposed to be included in the marketing area (Central has no sales in Lincoln County) while 15 percent of the sales are in five other adjacent counties that are not involved in this proceeding. Central estimated that its sales in the 11 counties represent about 53 percent of the total sales of fluid milk products in such counties. Central testified that sales in the area by handlers regulated under the Greater Kansas City and Southwest Plains orders are substantial enough so that it cannot be concluded that the area is more closely aligned with St. Louis than with these other markets.

Central testified that it receives its total milk supply from Mid-Am producers, 56 of which are located within the 12-county area. Central also indicated that milk is received from other Mid-Am members located outside the area and that supplemental supplies are obtained during fall months from Mid-Am's regulated plants. Central also testified that it pays for milk twice a month on the basis of farm weights and butterfat tests that are determined by Mid-Am and at prices determined by Mid-Am. Central also testified that the prices paid to Mid-Am for its total milk needs (between 4.8 and 5.3 million pounds per month) were in excess of the Southern Illinois Class I price. As a result, Central concludes that it is not a disruptive factor in the market and that regulated handlers have been successful in competing for sales in central Missouri. As evidence of this, Central testified that school contracts have been awarded to regulated handlers in the past and that most of the current contracts to serve a number of colleges and universities are held by a Southern Illinois regulated handler, while one is held by a Greater Kansas City regulated handler. Furthermore, Central testified that certain school contracts in the proposed area have been awarded at prices above those that apply to the St. Louis school district. In addition, Central testified that currently milk processed by Packet is priced below milk processed by Central in all outlets that are served by both handlers and that Central had to reduce prices to remain competitive when Packet first entered such outlets.

Central also contends that the 12-county area is not a major source of supply for handlers regulated under the Southern Illinois order and, thus, there is little overlap of procurement competition between regulated and unregulated handlers. In conclusion, Central contends that the 12-county area is not sufficiently associated with the Southern Illinois market, either in terms of sales or procurement, and that there

is no evidence of disruptive or disorderly marketing conditions that would warrant regulation of the area. Central contends that adoption of the proposal would do nothing more than establish an administrative recordkeeping and reporting burden for Central Dairy that is not warranted in view of marketing conditions.

Packet's proposal was also opposed by Deters All-Star Dairy (Deters), an unregulated handler who operates a plant at Quincy, Illinois. Deters testified that it distributes a small amount of dairy products in Lincoln County and possibly in Audrain and Montgomery Counties. Deters testified that if these counties were added to the Southern Illinois marketing area, it would become a partially regulated handler under the order. Deters testified that the added administrative burden of such partial regulation would probably result in Deters withdrawing from the area.

In its brief, Deters contends that Lincoln County should not be added to the marketing area since Packet has no sales in that county. In addition, Deters argues that none of the 12-county area should be regulated since there is no evidence of disorder that would warrant Federal regulation. Deters argues that competition between regulated and unregulated handlers is not, in itself, evidence of a marketing problem.

The objective in defining a marketing area is to encompass that territory within which regulated handlers compete with each other for a major portion of their sales of fluid milk products. If a significant proportion of the major sales area of regulated handlers is excluded from the marketing area definition, the possibility of one or more plants avoiding full regulation is enhanced. Any plant that is able to avoid full regulation has the opportunity to have a significant price advantage, in both the procurement of raw milk supplies and in the distribution of fluid milk products in competition with regulated handlers who are subject to the classified pricing and pooling provisions of an order. This occurs because regulated handlers are required to pay not less than minimum order prices for milk according to its use. Milk in fluid uses (Class I) is priced at the highest level while milk in manufacturing uses (Class II and III) is priced at lower levels. All producers who supply regulated handlers receive a blend price for all of their milk that is a weighted average of all the milk that is priced to all handlers at class prices. Thus, an unregulated handler is theoretically in a position to obtain a supply of milk for fluid use at the blend price paid to producers by regulated handlers since, all other factors being equal, producers would have no additional economic incentive to supply regulated handlers versus unregulated handlers. If an unregulated handler is able to obtain milk at such a price, such handler would have a pricing advantage for milk in fluid use over a regulated handler by the difference between the order Class I and blend prices. To the extent that an unregulated handler has manufacturing uses, the pricing advantage would be eroded since it is likely that such milk would also have to be procured at the blend price that is in excess of the minimum order Class II and Class III prices.

It is not possible or necessary to include within a marketing area definition the entire sales area of each and very regulated plant. It is very likely that there will always be some plants that have fluid sales beyond any defined regulatiory boundary into secondary markets in competition with either unregulated plants or plants regulated under other orders. Resolution of the issue involves a judgment of what area constitutes the primary sales area of regulated plants and whether competition between regulated and unregulated plants in secondary markets is so inequitable that the only reasonable recourse is Federal regulation of such secondary markets.

It is obvious that the current Southern Illinois marketing area does not include a sufficient proportion of the sales area of currently regulated plants. This is a result of structural changes in the distribution sector of the Southern Illinois market that occurred when the St. Louis -Ozarks order was terminated on April 1, 1985. When such order was terminated, five additional distributing plants in the St. Louis area (three in Missouri and two in Illinois) became regulated under the Southern Illinois order by virtue of their sales in the Southern Illinois marketing area. As a result, the amount of producer milk pooled under the Southern Illinois order increased from about 75 million pounds in March to 149 million pounds in April 1985. Also, total Class I sales by distributing plants increased from 47 million pounds in March to about 96 million pounds in April. Of total Class I sales, the amount distributed inside the Southern Illinois marketing areas by pool plants increased from about 25 million pounds in March to 33 million pounds in April. More importantly, the amount of fluid milk sales distributed outside the Southern Illinois marketing area increased from about 23 million pounds in March to over 63 million pounds in April. Thus, as a result of the termination of the St. Louis-Ozarks order and the regulatory change of the five distributing plants, Class I sales outside the marketing area by pool plants are almost twice as much as the total Class I sales made inside the marketing area by pool plants.

During the first quarter of 1985, prior to the termination of the St. Louis-Ozarks order, Southern Illinois order handlers accounted for about 60 percent of all fluid milk sales in the Southern Illinois marketing area, while 40 percent of the sales were made by plants regulated under other orders. Most of the other order sales in the marketing area were made by St. Louis-Ozarks order handlers, about 25 percent of total sales in the marketing area. During the second quarter of 1985, the proportion of total fluid milk sales in the Southern Illinois marketing area accounted for by handlers regulated under the order increased to about 83 percent because of the pooling of the additional plants.

During the first quarter of 1985, about 52 percent of the total fluid milk sales of Southern Illinois regulated plants were made within the Southern Illinois marketing area while 48 percent were outside the marketing area. Also, about 16 percent of total fluid sales were made in nonfederally regulated territory. However, during the second quarter of 1985, the proportion of the total sales of Southern Illinois order handlers within the marketing area had declined to about 34 percent, while the proportion outside the marketing area had increased to 66 percent. More importantly, the proportion of regulated handlers' sales in nonfederally regulated territory increased to about 52 percent.

These dramatic shifts in market sales data were a result of the Southern Illinois marketing area not encompassing much of the sales areas of the five former St. Louis-Ozarks order handlers. This further reflected in fluid milk sales data of such distributing plants. During March 1985, which was the last month of operation of the St. Louis-Ozarks order, about 18 percent of the fluid milk sales of the five plants were made in the Southern Illinois marketing area, 64 percent in the St. Louis-Ozarks marketing area, and about eight percent in nonfederally regulated territory. In April 1985, the proportion of the fluid milk sales of these plants in nonfederally regulated territory had increased to over 76 percent.

The previous data merely indicate that fluid milk sales of the five distributing plants continue to be made in the former St. Louis-Ozarks marketing area, which have been identified as

sales in nonfederally regulated territory since the termination of that order. Prior to April 1, 1985, sales in unregulated territory by Southern Illinois pool plants averaged about 7.5 million pounds per month. Beginning with April 1985, such sales in unregulated territory increased to over 48 million pounds per month. For the April 1985 through March 1986 period, total route sales in unregulated territory were about 593 million pounds.

The unregulated territory in which these fluid milk sales are made is not precisely identified. However, it is reasonable to conclude that the greatest proportion of such sales are made in the St. Louis portion of the former St. Louis-Ozarks marketing area. This area, which is represented in Mid-Am's proposal, is a major consumption center which has a population in excess of 2.1 million, which is slightly in excess of the population of the current Southern Illinois marketing area. Annual fluid milk product consumption estimates for this area indicate that fluid milk sales in the area represent 90 percent or more of the total fluid milk sales made by Souther Illinois order handlers in unregulated territory.

Southern Illinois regulated handlers are by far the major suppliers of the territory proposed by Mid-Am to be added to the Southern Illinois marketing area. At least six handlers operating distributing plants under the Southern Illinois order have sales in the area. Additional relatively minor sales of fluid milk products are made in four of the counties either by one plant regulated under the Southwest Plains order or one plant regulated under the Paducah, Kentucky, order. It is estimated that Southern Illinois handlers account for 100 percent of the fluid sales in St. Clair County, Illinois; the city of St. Louis; and Bollinger, Franklin, Jefferson, Perry, St. Charles, Ste. Genevieve, St. Louis and Warren Counties in Missouri. In Cape Girardeau County, it is estimated that 98 percent of sales are by Southern Illinois order handlers while the remaining two percent are by a handler regulated under the Paducah, Kentucky, order. In the three remaining Missouri counties included in the proposal (Crawford, St. Francois, and Washington) it is estimated that Southern Illinois order handlers account for 75, 90, and 95 percent, respectively, of fluid milk sales with the remainder in each of the counties being supplied by a Southwest Plains order handler.

In view of the previous findings concerning the sales area of regulated plants, all of the territory proposed by Mid-Am which was previously a part of the St. Louis-Ozarks marketing area should be added to the Southern Illinois marketing area. Such action is necessary because the current Southern Illinois marketing area does not reflect the structural and regulatory changes that occurred as a result of the termination of the St. Louis-Ozarks order. The current marketing area excludes a primary population center that is the major sales area of currently regulated plants. The addition of the territory would result in a marketing area definition that encompasses the major sales area of regulated plants and thereby provided greater assurance of a consistency of regulation among plants that compete with each other for the bulk of their fluid milk sales and for supplies of milk.

Packet's proposal to further extend the marketing area to include territory in central Missouri should not be adopted. The primary purpose of the proposal is to regulate Central Dairy. In this regard, it is noted that Central Dairy has no fluid milk sales in the current marketing area or in any of the territory previously discussed that would be added to the marketing area. Thus, Central Dairy is not a competitive factor with respect to fluid milk sales in the major population centers that represent the primary sales area of currently regulated plants.

The population of the 12-county area proposed by Packet (about 400,000) represents about 18 percent of the population in the area proposed by Mid-Am or about 9.3 percent of the total population of the marketing area as it would be expanded by this decision. Although the population of Boone and Cole Counties is rather large, the area in total represents a relatively minor secondary market for regulated handlers that serve other major markets.

Besides Central Dairy, which has sales in 11 of the 12 counties, fluid milk sales are made in the proposed area by six handlers who are regulated under the Southern Illinois order, three handlers who are regulated under the Greater Kansas City order, and by one Southwest Plains order handler. Deters, another unregulated handler, also has some fluid sales in at least one of the counties. However, for all practical purposes, regulated handlers and Central Dairy are the major competitors who sell in the 12-county area.

Sales in the area by Central Dairy represent from 50 to 57 percent of total fluid milk sales in the area based on a number of estimates of the total amount of fluid milk sales in the area. The proportion of sales represented by handlers regulated under the three orders is not revealed very precisely on the record, although it appears that Southern Illinois order handlers represent the greatest proportion of the remaining sales in the area. In Boone County, which has the greatest population, Central Dairy accounts for about 53 percent of total sales and it appears that Southern Illinois and Greater Kansas City order handlers account for about 31 and 18 percent of sales, respectively. In Cole County, Central Dairy accounts for 50–60 percent of sales while Southern Illinois, Greater Kansas City and Southwest Plains order handlers account for about 22 percent, 17 percent, and 3 percent of sales, respectively.

Although the preceding data are not precise, they indicate that Central Dairy is the primary handler serving the area and, furthermore, that such area constitutes Central Dairy's major sales area as about 85 percent of Central's sales are made in the area. Sales by regulated handlers, however, do not represent as great a share of the market and their sales in the area cannot represent a substantial proportion of their total business. Even if Southern Illinois regulated handlers had all of the fluid milk sales in the 12-county area, such sales would have represented from 8.8 to 7.3 percent of their total fluid milk sales. If it is assumed that Southern Illinois order handlers account for 35 percent of the sales in the area, such sales would represent from 3.0 to 2.5 percent of their total sales.

Since not all of the Southern Illinois order handlers have sales in the 12-county area, the sales in the area must represent a somewhat larger proportion of the business of those handlers who do sell in the area than the three percent indicated above. Even so, such sales cannot possibly represent a significant portion of the sales of regulated handlers. During the last three months of the existence of the St. Louis-Ozarks order, the five plants in the St. Louis area had from 7.6 to 8.3 percent of their sales in unregulated territory. However, the proportion of such sales in the 12-county area is not known. It is also noted that Packet has sales in only six of the 12 counties. Packet's total sales in the area during 1985 represented about six percent of the total estimated fluid milk sales in the 12-county area, or less than five percent of Packet's total fluid milk sales.

Packet's major contention is that Central Dairy has a pricing advantage over regulated handlers who are subject to classified pricing and that such handlers are, therefore, unable to compete successfully with Central Dairy for sales of fluid milk products in retail or institutional (schools, hospitals, military bases, etc.) outlets. In this

regard, Packet has not been actively involved in soliciting institutional business, at least with respect to school contracts, in either the 12-county area or the St. Louis area for a number of years. However, a number of regulated handlers have secured school contracts in the 12-county area and one other Southern Illinois handler currently supplies a number of colleges and universities in the area.

As previously stated, Packet estimates that Central Dairy had an average price advantage over regulated handlers that ranged from 92 cents to $1.45 per hundredweight over the period of May 1985 to October 1986. This cost difference was computed by applying an estimate of Central Dairy's Class I, Class II and Class III use to a regulated handler. Based on such uses, an average per hundreweight cost for a regulated handler was computed by applying order minimum class prices plus over-order charges that are paid by regulated handlers to Mid-Am and other cooperative associations. However, with respect to milk in Class I uses, Packet used announced Mid-Am prices, rather than prices paid, since certain monthly credits issued by Mid-Am were not considered in Packet's price comparisons.

Certain credits, up to a maximum of 31 cents, were identified on the record. Such credits relate to uniform daily receipts and to purchases of milk on the basis of farm weights and butterfat tests. However, Packet admitted that certain credits in addition to those that were identified apply to purchases of milk, although the magnitude of such other credits is not specifically contained in the record. Absent such other credits, the over-order charge for milk in Class I use that was used by Packet for the average price comparison ranged from $1.63 to $2.24 per hundredweight.

Mid-Am testified that Central Dairy was charged the St. Louis area blend price plus comparable over-order charges that are paid by regulated handlers for milk in Class I use. Prices that were paid by Central Dairy during May 1985 through October 1986 minus the blend price at St. Louis indicate that such comparable over-order charges applicable to Central Dairy, and presumably to regulated handlers, ranged from 97 cents to $1.22 per hundredweight. On this basis it would appear that the alleged pricing advantage for Central Dairy as computed by Packet is substantially overstated; as much as 52 to 95 cents per hundredweight over the period of the data.

In view of the previous price comparisons, it is obvious that the record is not at all clear as to what price level actually applies to regulated handlers for milk in Class I use. However, regardless of the price that applies to regulated handlers, it is apparent that Packet's computed pricing advantages for Central Dairy are related to factors other than the application of classified pricing to regulated handlers or the lack of classified pricing to Central Dairy.

Mid-Am excepted to the previous conclusion and indicated that, although the record is unclear as to the magnitude of Central Dairy's pricing advantage, Central Dairy does have a pricing advantage that can only be attributed to a lack of the application of classified pricing to Central Dairy. As a result, Mid-Am concludes that the marketing area should be expanded further to include the central Missouri area to regulate Central Dairy to assure equity in pricing among competing handlers.

Mid-Am's exceptions do not provide a basis for altering the previous conclusion or the denial of the proposal to expand the marketing area to include the 12-county central Missouri area. The exceptions fail to recognize the pricing comparisons and the lack of a structural relationship between central Missouri and other portions of the marketing area that are set forth hereafter that do not provide a basis for a further expansion of the marketing area to include the central Missouri area at this time.

During the May 1985 through October 1986 period, the average monthly prices paid by Central Dairy for all of the milk received from Mid-Am producers, absent certain credits, were in excess of the Southern Illinois order Class I price at St. Louis. Such average monthly prices were also subject to identified credits that are available to all handlers that purchase milk from Mid-Am. The maximum credit, 31 cents per hundredweight, consists of three cents for purchasing milk on the basis of producer butterfat tests, three cents for milk purchased on the basis of farm tank weights, and up to 25 cents for uniform receipts.

Central Dairy received the farm weights and tests credits but testimony did not reveal what credit level was received for uniform receipts. However, even if Central received the same volume of milk every day and obtained the maximum credit, the average price paid by Central Dairy would still have been in excess of the order Class I price during 14 of the 18 months. During the 14 months, Central Dairy's average price ranged from 3 to 52 cents over the order Class I price, with the average being almost 29 cents over the Class I price. During four months Central Dairy's average price was less than the order Class I price by 20, 10, 9, and 6 cents per hundredweight.

Central Dairy's average price for milk and the minimum order Class I price are not directly comparable. The Class I price applies to milk in fluid uses while the average price applies to all milk received by Central Dairy whether it is used in fluid milk products or in other dairy products such as cream or ice cream. In addition, the Class I price at St. Louis includes a plus location adjustment that is intended to reflect the additional cost of hauling milk to plants in this major population center from northern supply areas relative to the cost of hauling milk from such areas to plants located in the base zone of the marketing area. (Official notice is taken of the final decision issued by the Deputy Assistant Secretary on October 15, 1985 (50 FR 42549) that considers the pricing of milk in the St. Louis area). Consequently, it is not at all apparent that the location value of milk at Central Dairy's location (Jefferson City) would need to reflect the value that is necessary to attract a supply of milk to St. Louis. In view of these factors, as well as the previous price comparisons, it cannot be concluded that Central Dairy has a substantial pricing advantage over regulated handlers as is contended by Packet.

Central Dairy does rely, to a limited extent, on regulated milk to supplement fluid milk needs during fall months of the year. Such supplemental supplies, representing about 10 pecent of Central Dairy's total fall receipts, are received from two Mid-Am supply plants. One of the supply plants is regulated under the Southern Illinois order while the other plant is regulated under the Southwest Plains order. Such milk is priced as Class I milk under the order that regulates the plant from which the milk is shipped.

Federal order producers who supply the Southwest Plains and Southern Illinois orders benefit from the plant sales that supplement Central Dairy's fluid milk needs during the fall months. However, during other months such producers carry the burden of maintaining the reserve supplies of milk that are necessary to meet Central Dairy's fluid milk needs without sharing in the benefits that accrue from Central Dairy's fluid milk sales. Consequently, there is some inequity between producers who carry the reserve supplies and those producers who supply Central Dairy throughout the

year. Although this is contrary to the concept of marketwide pooling under Federal orders, whereby all producers share equally the benefits from fluid milk sales and the cost of maintaining reserve milk supplies, this is not in itself a sufficient basis under current marketing conditions to regulate Central Dairy under the Southern Illinois order for several reasons.

First of all, as a prelude to the equal sharing concept among producers, there must be some demonstration of a commonality of market from either a handler (sales) or producer (supply) viewpoint. This has not been demonstrated with respect to handlers as previously indicated by the description of the proportions of sales of fluid milk products made in the 12-county area by various handlers. The 12-county area is a relatively minor sales area that is served to a limited degree by Southern Illinois order regulated handlers who are primarily involved in supplying the fluid milk needs of other heavier populated markets. In terms of sources of supply, Mid-Am represents the producers in the 12-county area as well as a large proportion of the producers who supply the Southern Illinois market. However, in terms of the most current data in the record, there is no procurement area overlap between Central Dairy's supply area and the Southern Illinois order supply area.

Another factor of consideration is the extent to which all producers would be expected to benefit as a result of the extension of regulation to Central Dairy. Any potential benefit would be insignificant even if all of Central Dairy's receipts were sold as fluid milk products because of the limited volume of such receipts relative to the amount of milk included in the Southern Illinois order pool. Central Dairy's total receipts in May (4.8 million pounds) and October (5.3 million pounds) of 1986 would have represented 2.3 and 3.1 percent, respectively, of the producer milk that would have been pooled under the order during such months. This would have resulted in a blend price increase of a little over one cent for the two months. To the extent that Central Dairy has milk in other than fluid uses, the impact would have been less.

A third factor is that the fall supplemental supplies represent a very limited proportion (about 10 percent or 500,000 pounds) of Central Dairy's total receipts. More importantly, about 80 percent of such supplemental milk is regulated under the Southwest Plains order, which indicates a greater association with that order than the Southern Illinois order. Furthermore, from the limited amount regulated under the Southern Illinois order (equivalent to less than three tanker loads per month), it cannot be concluded that Southern Illinois order producers are bearing a substantial burden by maintaining reserve milk supplies to meet Central Dairy's fluid milk needs.

In view of the previous findings, the Southern Illinois marketing area should not be expanded to include the 12-county area in central Missouri. Such area is neither a significant sales area of currently regulated plants nor a significant source of supply for regulated handlers. Furthermore, it cannot be concluded that regulated handlers have a significant cost disadvantage in competing for fluid milk sales in the area because of Central Dairy's unregulated status and the resulting lack of application of classified pricing and pooling regulations to Central Dairy.

The marketing area expansion included herein will result in a marketing area definition that more appropriately reflects the sales area of currently regulated plants. The new territory should be included in the Southern Zone of the marketing area for pricing purposes to maintain the current level of pricing that applies at distributing plants in such area under the order. Also, as a result of the expansion, the Southern Illinois marketing area should be redesignated as the Southern Illinois-Eastern Missouri marketing area.

Proponents of the marketing area expansion that is adopted herein testified that the current Southern Illinois order provisions should apply to the expanded marketing area and no other proposed amendments of particular applicability to the added territory were contained in the notice of hearing or testified to at the hearing. Consequently, the regulatory provisions of the order for the expanded Southern Illinois-Eastern Missouri marketing area are those of the current Southern Illinois order, except as modified hereafter in the other material issues identified in the proceeding.

2. *Performance standards for pool plants.* The two proposals to relax the shipping standards for pool supply plants should be adopted. The minimum percentage of a supply plant's receipts that must be transferred to distributing plants to qualify the supply plant as a pool plant is reduced from 50 percent to 40 percent for the month of December. Also, the minimum shipping percentage for a supply plant operated by a cooperative should be reduced to 25 percent if the cooperative delivered 75 percent of its producer milk to pool distributing plants during the immediately preceding 12-month period of September-August. In addition, the receipts of milk at distributing plants and supply plants that are used as a basis to determine whether such plants qualify as pool plants should be modified.

Under the current order provisions, a supply plant must transfer at least 50 percent of its receipts of milk from dairy farmers and cooperative associations to pool distributing plants to qualify as a pool plant. If the supply plant meets such standard for the months of September-January, it is eligible for automatic pool plant status for the following months of February-August.

The two changes in the pooling standards adopted herein for supply plants were proposed by six cooperative associations (AMPI, Land O'Lakes, Mid-Am, Midwest, Prairie Farms, and Wisconsin Dairies), that represent about 90 percent of the dairy farmers who supply the market.

The cooperatives testified that the December shipping standard should be reduced since the market's supply-demand balance is not as tight during December as it is during other months when supply plants must make shipments to distributing plants to qualify for pool plant status. The cooperatives contend that such situation exists because fluid milk demand is less during the last two weeks in December while production is beginning to increase seasonally.

The cooperatives also proposed that a 25-percent shipping standard should be adopted for a supply plant operated by a cooperative association to eliminate certain costly and inefficient movements of milk that are being made for pooling purposes. Testimony concerning the need for the proposal was limited to the marketing situation concerning a supply plant operated by Prairie Farms at Carbondale, Illinois. Prairie Farms testified that the supply plant, which also manufactures a number of Class II products, is located in the southern portion of the marketing area. Prairie Farms testified that a considerable portion of the plant's milk supply is obtained from northern procurement areas while the available distributing plants to which the Carbondale plant makes its qualifying shipments are also located to the north. Consequently, the cooperatives contend that a lower shipping standard would reduce the marketing costs incurred to qualify the Carbondale plant, or any other supply plant in a similar situation, for pooling purposes. The cooperatives also proposed, that as a condition for a lower

shipping standard, cooperatives operating any such supply plants would have to demonstrate a sufficient degree of performance in supplying the fluid milk needs of the market. Thus, in order to qualify for the lower shipping standard, the cooperatives proposed that at least 75 percent of the producer milk of the cooperative association operating the supply plant would have to be received at distributing plants during the immediately preceding 12-month period of September-August.

There was no opposition to the proposed lower shipping standard for December. However, NFO opposed the adoption of the 25-percent shipping standard for supply plants that are operated by cooperative associations. NFO contends that the proposal would provide an economic incentive for the market's deficit milk supplies to be committed to a supply plant for manufacturing uses and thereby jeopardize the availability of milk supplies for fluid uses at distributing plants.

The lower 40-percent shipping standard for December should be adopted. The lower standard is appropriate in view of the fact that the market's supply/demand relationship for December is not as tight as during the other months of the September through January qualifying period for supply plants. In addition, it is apparent that shipments from supply plants are relied on to a lesser extent to furnish the fluid milk needs of the market during December than during the other qualifying months. For example, during September-November 1984 and January 1985, about 69 percent of the producer receipts at the market's supply plants was transferred to distributing plants while about 57 percent was shipped during December 1984. During the next qualifying season (September 1985-January 1986) 53 percent was shipped during December while 57 percent was shipped during the other four months.

Although the above percentages for December 1984 and 1985 are in excess of the 50-percent shipping standard, such percentages also include shipments that were made solely for the purpose of pooling supply plants. Such additional shipments from supply plants require either a redirection of milk that is normally shipped directly from farms to distributing plants or the reloading of milk at distributing plants to be shipped back to supply plants or other manufacturing plants for surplus disposal. Such extra hauling and handling practices result in additional marketing costs, waste energy, adversely affect milk quality and may disrupt the efficient operation of distributing plants.

A lower December shipping standard for supply plants is warranted. The 40-percent standard should be low enough to eliminate most if not all of the uneconomic shipments by supply plants that are made in that month solely to qualify the plants and the milk associated with such plants for pooling. In addition, it should be sufficiently high to assure adequate supplies of milk at distributing plants during the first two-thirds of such month when Class I sales are higher.

The proposed lower shipping standard for supply plants operated by a cooperative association that has furnished a high percentage of its milk supply to the market's distributing plants during the past year should also be adopted. Specifically, a 25-percent shipping standard should apply during September-January for a supply plant operated by a cooperative association, if 75 percent of such cooperative's producer milk was delivered to pool distributing plants during the immediately preceding 12-month period of September-August.

This proposal is designed to alleviate a specific marketing problem that Prairie Farms is encountering under the order's current 50-percent shipping standard for supply plants. It is not clear whether any other cooperative would qualify a supply plant for pooling under the lower performance standard.

Prairie Farms operates a pool supply plant at Carbondale, Illinois, which is in the Southern Zone of the marketing area. In addition to supply plant operations, cottage cheese, sour cream and other Class II uses are manufactured at the plant. The supply plant qualifies on the basis of shipments to the handler's Southern Illinois distributing plants located at Carlinville and Olney, which are located in the market's Base Zone and more than 120 miles north of Carbondale.

Since Carbondale is situated on the southern fringe of the market's procurement area, a considerable portion of the plant's milk supply is received from the farms of producers who are located more than 100 miles to the north. Milk produced on dairy farms in Clinton, Jefferson and St. Clair Counties is received regularly at the supply plant.

Each year during the qualifying season for supply plants (September-January), Prairie Farms ships at least 50 percent of its producer milk associated with the Carbondale plant to pool distributing plants to assure that the supply plant will qualify for pool plant status. At the same time that milk is being shipped north from the supply plant in the Southern Zone to distributing plants in the Base Zone to assure that the supply plant qualifies as a pool plant, milk from the north is being hauled south to supply the Carbondale plant's processing requirements. Consequently, there are some inefficiencies associated with the operation of the plant due to its location relative to the locations of the market's distributing plants, population centers, and milk supplies.

Prairie Farms delivered more than 79 percent of its producer milk to Southern Illinois pool distributing plants during the months of September 1985 through August 1986. For the same 12-month period, only 35 percent of the producer receipts at all of the market's supply plants was moved to pool distributing plants and 59 percent of the market's producer receipts was used for Class I purposes.

Despite the inefficiencies associated with the location of the Carbondale plant, the proposal should be adopted for this and other supply plants that are operated by cooperative associations that are substantially and primarily involved in supplying the fluid milk needs of the market throughout the year. A market supplier's willingness to furnish at least three-fourths of its pooled milk to distributing plants on a year-round basis should be recognized in the performance standards for pool supply plants. A lower qualifying standard is appropriate in view of a cooperative's overall effort in furnishing such a large percentage of its milk to pool distributing plants during the past marketing year for supply plants. Providing the lower standard will give cooperatives the flexibility to move milk supplies as necessary and to operate more effeciently by reducing if not eliminating unnecessary shipments of milk from supply plants solely for pooling purposes.

The 75-percent overall delivery standard that a cooperative would have to meet on an annual basis to be eligible to qualify supply plants under the lower shipping percentage is sufficiently above the marketwide average Class I utilization to maintain the integrity of the order's pooling standards for such plants. Furthermore, a supply plant would not be able to qualify for pool status entirely on the basis of a cooperative's direct deliveries to distributing plants. An eligible supply plant would continue to qualify for pool status on the basis of transfers from such plant to pool distributing plants. However, such a supply plant would

have to transfer only 25 percent rather than 50 percent of its pooling base receipts to fully regulated distributing plants to qualify the supply plants as a pool plant.

NFO's concerns, i.e., that the proposal would provide an economic incentive for the market's deficit milk supplies to be committed to manufacturing uses thus jeopardizing the availability of milk supplies for fluid uses, are unwarranted. Actually, to be eligible to qualify a supply plant for pooling under the lower shipping standard, a cooperative would have to furnish 75 percent of its total pooled milk for the year to distributing plants whereas a supply plant must furnish only 50 percent of the plant's milk receipts to distributing plants each month. Furthermore, the year-round performance standard for a cooperative association to utilize the lower shipping standard is substantially in excess of the market's Class I utilization.

In addition, a modification is incorporated in the order language adopted herein that specifies that the lower shipping standard is applicable only to cooperative associations that have supplied the market during each of the months of the previous September through August period. This will prohibit the possibility of a cooperative association being able to pool additional milk under the order during the next 12 months by associating 75 percent of its supply during only a limited portion of the September through August period. The lower shipping standard is intended to apply only to those cooperative associations that have demonstrated a consistent, year-round, substantial level of performance in supplying the fluid milk needs of the market.

As intended, the provisions for automatic pooling for supply plants would not be changed. Thus, if an eligible supply plant operated by a cooperative met the 25-percent shipping standard during the qualifying months of September–January, such plant would qualify for automatic status in the following months of February–August. A supply plant's eligibility to qualify under the lower shipping percentage during the qualifying season, which begins on September 1 of each subsequent year, would be dependent on the cooperative's deliveries to distributing plants during the preceding 12-month period.

Additional proposed modifications should the made to the pool plant definition for both distributing plants and supply plants. The changes are necessary to clarify the pooling standard for supply plants and to modify what receipts of milk at distributing plants and supply plants should be used as a basis for determining whether such plants are pool plants. Briefly, under current order provisions, a distributing plant attains pool plant status if its route disposition meets specified percentage of receipts of milk from dairy farmers (including milk diverted by an operator of a pool plant) and cooperative associations. A supply plant acquires pool status by shipping a sufficient proportion of its receipts of milk to pool distributing plants. The type of receipts of milk at a supply plant that are used as a measure of performance are the same as those specified for a distributing plant. In addition, the pool supply plant provision requires that pool distributing plants that receive supply plant milk must have at least 50 percent Class I use (40 percent in some months) of the total of supply plant milk and producer milk receipts.

This latter Class I use requirement should be eliminated from the pooling standard for supply plants. The application of this standard is an intrusion in the supply plant pooling provision that, in addition to being confusing and presenting a number of application questions, establishes a totally different pooling criteria than what is required of distributing plants to attain pool plant status. In order to pool a supply plant, it should only be necessary for a supply plant to ship a sufficient proportion of its receipts to distributing plants that are pooled on the basis of sufficient route disposition without the additional intrusion of a Class I use standard.

The supply plant pooling provision should also be modi ied to clarify what receipts of milk should be used as a basis to determine whether a sufficient proportion of receipts have been shipped to pool distributing plants. In addition to the current receipts that are specified (milk from dairy farmers and cooperative associations) all milk diverted from the plant should be included as receipts. Such receipts represent the normal supply of milk that is available for use at or shipment from a supply plant and, thus, should be used as a basis of measuring the plant's performance. However, milk that is received at a supply plant by diversion from another plant should not be considered a receipt for measuring supply plant performance. Such milk is normally received for measuring supply plant performance. Such milk is normally received at some other plant (pooled under this or another order) and would be included in the pooling based receipts of the plant from which the milk was diverted.

As indicated under issue 4, milk may be diverted between pool plants, including from a supply plant to distributing plants. Such milk would be included as a receipt at the supply plant from which diverted since it represents a part of the normal supply of milk at the supply plant. However, any such diverted milk would not be included as a qualifying shipment for supply plant pooling purposes. Only milk that is trasferred from the supply plant to a distributing plant would be included as qualifying shipments. This distinction was made on the record by proponents of the amendments to the supply plant provisions of the order. In this regard, the supply plant definition should also be modified to specify that milk must be "transferred" rather than "moved" to distributing plants.

It is noted that the proposed use of the term "producer milk" in referring to receipts of milk is not incorporated in the pool plant definition for a supply plant. Although such term is essentially the same as the terms used herein (receipts from dairy farmers, cooperative associations and milk diverted from a plant) it is technically incorrect since milk does not become "producer milk" until it is determined that the plant receiving the milk has qualified as a pool plant.

The pool plant definition for distributing plants should be modified to include additional receipts of milk in determining whether such plants are pool plants. Currently, the order does not include in a distributing plant's receipts all milk that may be diverted from the plant or milk that is received from a supply plant. As a result of the exclusion of these receipts, the current pooling standards for distributing plants do not accurately measure a plant's total performance in determining whether such plant should be pooled. For example, if a distributing plant received all of its milk from a supply plant, the distributing plant would have no pooling base (i.e., no receipts) and, technically, the plant could not qualify as a pool plant regardless of the amount of its route disposition. Also, if only a token amount of milk was received from diary farmers or cooperative associations, the plant could be a pool plant regardless of the amount of milk that might be received from supply plants for other than fluid use. The same situation could occur by excluding from a distributing plant's receipts milk that is diverted from the plant to another outlet by other than a plant operator. There would be virtually no limit on the amount of milk that a cooperative association could associate with the market during the months of May, June and July. However, by including all diverted milk as a

receipt at a distributing plant, an indirect diversion limitation is applicable through the pool plant standards.

In order to correct these deficiencies, all bulk fluid milk products physically received at a distributing plant, as well as all milk diverted from such a plant, should be included as receipts in determining whether distributing plants should acquire pool plant status. In addition to providing a better measure of a plant's performance, such action will protect the integrity of the pooling provisions of the order by limiting the amount of additional milk that may be associated with the market for other than fluid uses.

3. *Regulation of distributing plants that qualify as pool plants under more than one order.* The order should be amended to provide that a distributing plant that meets the pooling standards of this and one or more other Federal orders, and which was a pool plant under this order in the immediately preceding month, shall continue to be a pool plant under this order until the third consecutive month in which it has a greater proportion of its route disposition in another Federal milk marketing area.

The order currently provides for essentially the same regulatory provision for plants that meet the pooling standards of more than one order. However, a shift in regulation cannot occur until the third consecutive month in which a plant has more than 50 percent of its route disposition in the marketing area of another Federal order. Such provision was adopted on an expedited basis effective February 1, 1987, on the basis of an emergency partial final decision issued on the record of this proceeding.

The emergency final decision clearly sets forth the basis of the historical policy for regulating plants that have sales in a number of markets under the order in which the greater proportion of sales are made. However, the decision concluded that there should be a deviation from this policy because of the unique marketing conditions that existed as a result of the termination of the St. Louis-Ozarks order. Basically, the reason for such a deviation was that the policy disregards the fact that 75 percent or more of the sales of currently regulated plants are in nonfederally regulated territory that may well have a greater association with the Southern Illinois marketing area than with any other Federal milk marketing area.

In its brief, Mid-Am contends that the February 1, amendment should be continued since an expansion of the marketing area might not resolve a potential shift in plant regulation that the amendment was intended to prevent. Mid-Am contends that the sales pattern of one distributing plant was undergoing a period of adjustment at the time of the hearing and that the handler has continued to make adjustments since the hearing.

As indicated in issue number 1, the Southern Illinois marketing area is being expanded substantially to include all of the St. Louis territory that was included in the former St. Louis-Ozarks marketing area. Such expansion to include this major metropolitan area will result in more than a doubling of the population in the current Southern Illinois marketing area. The major reason for the expansion is to include the primary sales area of currently regulated plants in the marketing area. Consequently, recognition of a concern that a plant may shift regulation because of sales in another market would be in direct conflict with the need and basis for the marketing area expansion to include the major sales area of regulated plants. Therefore, the order should be amended to reestablish the order provision that existed prior to the February 1, 1987, amendment.

Mid-Am filed exceptions to the previous findings and conclusions and requested that the order provisions established on February 1, 1987 be continued. Mid-Am reiterated its previous concern that the marketing area expansion included herein might not prevent a shift in regulation of one distributing plant. Mid-Am maintains that the sales pattern of the Kroger plant (not Heartland Dairy) was in the process of being adjusted at the time of the hearing and has since closed a number of stores in the St. Louis area. Mid-Am concludes that the plant may become regulated under the Memphis, Tennessee order as a result of having a greater proportion of its sales in that marketing area. Thus, Mid-Am contends that the potential for disorderly marketing conditions that were eliminated by the emergency partial final decision would be reestablished by the reinstatement of the provisions that existed prior to February 1. Mid-Am states further that it is likely that a future hearing would have to be held if the plant becomes regulated under the Memphis, Tennessee order. Mid-Am questions the need for such action when the current provisions have served the purpose of continued regulation of the plant under the Southern Illinois order.

The fact that the sales area of the Kroger plant may have changed since the hearing is not evidence that is contained in the record of the proceeding and, thus, cannot be used as a basis for a decision on this issue. Moreover, Mid-Am's exceptions miss the essential points of both the emergency partial final and recommended decisions. The policy of regulating a plant under the order in which it has the most sales was temporarily set aside in view of the substantial proportion of sales made in nonfederally regulated territory by St. Louis area plants. With the substantial addition to the marketing area, it is questionable why a plant should continue to be regulated under this order if in fact it has greater sales in some other marketing area and thus a greater competitive relationship with other order plants. This is particularly relevant with respect to the Memphis, Tennessee order which would establish a higher Class I price, and higher prices to producers, than would be established by the Southern Illinois-Eastern Missouri order at the same location. Under such circumstances it would be difficult to conclude that such a shift in regulation would jeopardize the ability of the plant to attract adequate supplies of milk or that disorderly marketing conditions would nesessarily exist among plants in the St. Louis area. Consequently, the request to continue the current provisions of the order is denied at this time. In the event that a future shift in regulation occurs, the hearing process is the appropriate forum to consider whether disorderly marketing conditions would exist that would warrant possible amendatory action to regulate the plant under this order.

4. *Definition of producer milk.* The producer milk definition, which stipulates the conditions under which milk may be diverted (moved to alternative outlets) and remain pooled and priced under the order, should be revised. The revised definition incorporates the basic features proposed by cooperative associations to provide for greater overall marketing efficiencies in handling reserve supplies of milk associated with the market. Generally, the revised definition contains two major changes from current provisions. Diversions would no longer be limited on an individual producer basis and all milk diverted by handlers (including milk diverted by a cooperative association from another handler's pool plant) would have to be associated with a pool plant.

Specifically, the revised producer milk definition would allow cooperative associations and pool plant operators to divert 45 percent of their total milk supplies to nonpool plants and still be priced under the order during August

and December. During September-November and January-April, 35 percent could be diverted to nonpool plants. In order to be eligible for diversion to nonpool plants, a dairy farmer's milk would have to be physically received at a pool at least once during each of the months of August-April. Also, unlimited amounts of milk could be diverted to other pool plants. All diverted milk would be priced at the location of the plant where it is physically received and guidelines would be provided to exclude any milk that is diverted in excess of prescribed limitations.

Currently, diversions to both pool plants and nonpool plants are limited on an individual producer basis. A dairy farmer's milk may not be diverted to another pool plant during any month for more days of production than such producer's milk is received at a pool plant. The same monthly limit applies to diversions to nonpool plants that are regulated under other Federal orders. With respect to diversions to unregulated nonpool plants, no limits apply in May, June and July. In the months of August and December, not more than 12 days of a dairy farmer's milk production may be diverted to such plants and during the months of September-November and January-April not more than 8 days of a producer's milk production may be so diverted.

The proposal to revise the producer milk definition was submitted by six cooperatives (AMPI, LOL, Mid-Am, Midwest, Prairie Farms, and Wisconsin Dairies) that supply 90 percent of the market's pooled milk. They testified that the changes are needed to give handlers more flexibility to move milk of dairy farmers to manufacturing plants when it is not needed at distributing plants for fluid use.

In order to provide for greater efficiency in marketing reserve supplies of milk, the cooperative associations proposed that the limits on diversions to nonpool plants apply on an aggregate handler basis rather than an individual procedure basis. They proposed that handlers (pool plant operators and cooperative associations) be permitted to divert up to 25 percent of their total milk supply during September-November and January-April and up to 35 percent of their receipts during the months of August and December. The also proposed that the current differentiation in the order between the amount of milk that may be diverted to unregulated plant and other-order plants be eliminated to allow diversions to all nonpool plants on the same basis. The cooperatives also proposed that a dairy farmer's milk must be received at a pool plant at least once during each of the months of August-April in order to be eligible to be diverted to a nonpool plant and that all milk be priced at the plant to which it is diverted. As a further refinement, the cooperatives proposed that guidelines be established to determine the manner in which milk should be excluded from the pool in the event that diversions exceeded the proposed limitations. Also, the cooperatives proposed that the order be amended to provide for unlimited diversions between pool plants that are operated by the same handler.

The cooperatives testified that allowing milk to be diverted to nonpool plants on the basis of a handler's total producer receipts, rather than on an individual producer basis, would provide for greater flexibility and efficiency in marketing milk that is in excess of fluid milk needs. They testified that the proposal would reduce administrative costs associated with tracking the milk of individual producers and that the uneconomic hauling of milk that occurs because of the current provisions would be substantially reduced. The cooperatives testified that under current provisions, milk of different dairy farmers must be shifted between pool plants and nonpool plants because the milk of individual dairy farmers can only be diverted to nonpool plants for a specified number of days. Thus, they contended that significant savings in hauling costs would result under the proposal as the most advantageously located supplies of milk could be shipped to distributing plants while outlying milk could be moved to nonpool plants.

The cooperatives testified that the proposed diversion percentage limitations incorporate the seasonality reflected in the current diversion limitations. The cooperatives also testified that the proposed diversion limits were intended to reduce the amount of milk that could be shipped to nonpool plants and still be priced under the order. In effect, the cooperatives contend that since the proposal would result in greater handler flexibility and marketing efficiency, there is also a relatively greater need to protect the integrity of the pooling standards by limiting the amount of milk for manufacturing uses that could be associated with the market. Thus, they testified that the proposed diversion limitation for August and December (35 percent) is slightly below the current 39 percent diversion limitation on an individual producer basis (12 days of production divided by 31 days). During September-November and January-April, they testified that the proposed 25 percent diversion limitation reflects the need for relatively less milk to be diverted and is also slightly below the current 26 to 29 percent diversion limitation on an individual producer basis (8 days of production divided by 28 to 31 days).

In an effort to further reduce the amount of milk for manufacturing uses that could be associated with the market, the cooperatives also proposed that the same diversion limitations should apply regardless of the type of nonpool plant that receives the milk. They contended that substantial quantities of milk can be diverted during the August-April period when diversions are intended to be limited. They testified that this can occur because different quantities of milk can be diverted to unregulated nonpool plants (eight to 12 days) and nonpool, other-order plants (the same number of days of production that is received at a pool plant). For example, during August and December when 12 days of production can be diverted to unregulated nonpool plants, they testified that pool plants could potentially receive only nine days of production as the remaining milk could be diverted to nonpool, other-order plants. Likewise, they testified that during those months when eight days of production can be diverted to nonpool plants, pool plants could potentially receive only 11 days' worth of milk production during the month.

The cooperatives also proposed that a dairy farmer must be sufficiently associated with the fluid milk needs of the market in order to be eligible for diversion to a nonpool plant. Thus, they proposed that, in order to be eligible for diversion to a nonpool plant, a dairy farmer's milk would have to be received at a pool plant at least once during each of the months of August-April. The cooperatives also testified that guidelines should be established in the order that prescribe a method for dealing with milk that may be diverted in excess of the diversion limitations. They testified that such guidelines are necessary to avoid controversy over what milk should be excluded from the marketwide pool in the event that milk is over-diverted.

With respect to diversions between pool plants, the cooperatives testified that the current order limitations were intended to establish which handlers were responsible for paying producers when their milk is received at more than one pool plant during the month. The cooperatives testified that there should be no limit on such diversions between pool plants that are operated by the

same handler since the same handler would continue to be responsible for the milk. The cooperatives also testified that all diverted milk should be priced at the plant where it is received, regardless of the type of plant that receives the milk.

There was no opposition to the cooperaties' proposal generally. NFO supported the proposal conceptually but testified that the proposed diversion allowances were overly restrictive in terms of NFO's marketing experiences under the order. NFO testified that if the proposed diversion allowances were adopted, it would not be able to pool all of the milk of its producers who have historically been associated with the market, unless uneconomic shipments of milk were made. Thus, NFO claimed that the elimination of the separate diversion allowance for deliveries to plants regulated under other Federal orders, in conjunction with a lower allowance for diversions to all types of nonpool plants, would have an adverse impact on its marketing situation. NFO testified that in October 1986, 26 percent of its producer milk was diverted to nonpool plants (10 percent to plants regulated under other Federal orders and 16 percent to other unregulated plants). In November 1986, 33 percent of its milk supply was diverted (19 percent to other order plants and 14 percent to other nonpool plants). Thus, NFO requested that the separate diversion allowance be continued for nonpool, other order plants, or, in the alternative, that the diversion allowances be increased by 10 percentage points.

When milk in not needed at a fluid milk plant, usually it is moved directly from the farm to a nonpool plant where it is used in manufactured dairy products. Hence, the order currently provides for the milk to be diverted from pool plants to nonpool plants by regulated handlers in recognition of an efficient marketing practice for disposing of the necessary reserve supplies of milk that are associated with the fluid milk needs of the market. Even greater efficiencies, as well as handler flexibility, would result from the adoption of the cooperatives' proposal to limit diversions on the basis of a handler's total receipts. Adoption of the proposal would result in obvious savings in transportation costs as testified to by cooperative associations. The milk of distant producers who are located nearer to nonpool plants could be diverted more frequently than under current provisions while the milk of other dairy farmers who are situated near the market's fluid milk plants could be continuously delivered to such plants. Consequently, the primary thrust of the cooperatives' proposal to limit diversions to nonpool plants during August-April on the basis of a handler's total receipts should be adopted.

However, the proposed limits on the amount of milk that a handler may divert to nonpool plants is overly restrictive in tems of the current diversion limitations. The proposal eliminates the allownace for diversions to plants regulated under other orders and also reduces the percentage allowances from about 27 percent to 25 percent for the months of September–November and January–April and from 39 percent to 35 percent in August and December. Such a reduction in the amount of milk that may be diverted to nonpool plants is not consistent with the changes that occurred in the supply-demand relationship for the market since the St. Louis-Ozarks order was terminated on April 1, 1985. For the 12-month period immediately preceding such termination (April 1984–March 1985), about 72 percent of the producer milk regulated under the Southern Illinois order was used in Class I. For the April 1985–March 1986 period, only about 60 percent of the producer milk was used in Class I. Consequently, the limits on diversions to nonpool plants should be increased by 10 percentage points as proposed by NFO.

Prairie Farms filed exceptions to the previous conclusion and contends that the decrease in the market's Class I utilization does not provide a basis to liberalize the diversion provisions. Contrary to Prairie Farms contention, the market's Class I utilization which is a measure of the market's overall supply/demand relationship, does provide a basis for an increase in the amount of milk that may be diverted to nonpool plants. Furthermore, the increase in the diversion limits is also supported by the removal of the separate diversion limits for different types of nonpool plants.

Diversions to all types of nonpool plants would be accommodated under the higher limits. No separate allowance for diversions to plants regulated under other Federal orders would be provided. Since these outlets are used on a limited basis to dispose of this market's reserve milk supplies and are accommodated under the order broader category of nonpool plants with highter limits, there is no reason to provide a separate allowance for such plants.

Under the current method of limiting diversions to a nonpool plant, each diary farmer's milk must be received frequently at a pool plant during the month. This automatically insures that the milk of each diary farmer is used to supply the fluid milk needs of the market and that such milk is, in fact, eligible to be used in fluid milk products. However, under the revised method of limiting diversions, a dairy farmer's milk could continuously be received at nonpool plants for manufacturing uses and be priced under the order. There would be no assurance that such milk was even eligible for use in fluid milk products, or that it was sufficiently associated with the fluid market. Thus, in order to establish a sufficient association with the market, the order should provide that each dairy farmer's milk must be received at a pool plant at least once during each of the the months of August through April to be eligible for diversion to a nonpool plant.

The order also should include the procedure proposed by the cooperative that would be used in excluding from pool status any milk diverted to a nonpool plant by a pool plant operator or a cooperative association that exceeds the percentage allowances specified in the order. As proposed and adopted herein, the quantity of milk that exceeds the percentage limit would not be considered producer milk and would not be priced under the order. In such cases, the handler diverting the milk may designate the diary farmer deliveries that would not be producer milk. Absent such a designation by the handler, the milk last diverted would be excluded from the pool by the market administrator.

The six cooperative associations proposed that there should be no limit on the amount of milk that could be diverted between nonpool plants operated by the same handler. However, there is no compelling reasons to limit diversions between pool plants operated by different handlers. Consequently, no limitations should apply on milk diverted between pool plants. This will provide handlers with the maximum flexibility possible under the order in accounting and paying for such milk. Absent such a change, a handler who supplied another handler's pool plant, but who wanted to maintain the producer payroll, would have to physically receive the milk of such producers at its pool plant and then transfer the milk to the other handler's pool plant. Such transferring of milk would represent an unnecessary and costly movement of milk. Permitting unlimited diversions between pool plants will eliminate the need for such inefficient milk marketing practices and simplify the accounting and payrolling procedures associated with such producer milk.

In connection with is proposal to provide unlimited diversions between pool plants operated by the same handler, the cooperatives proposed that a handler be defined as a persons who operates one or more pool plants. Since the provisions adopted herein will permit unlimited diversions between pool plants regardless of whether such plants are operated by the same handler or by different handlers, the proposed change in the handler definition is not needed.

As indicated under issue 2 concerning the performance standards for pool plants, all diverted producer milk would be included as a receipt at the pool plant from which the milk was diverted for purposes of determining whether such plant qualifies as a pool plant. Currently, milk diverted by a cooperative from the pool plant of another handler is not included in the plant's receipts to determine whether such plant is a pool plant. Consequently, there is no limit on the amount of milk a cooperative could attach with this market during May, June and July when there are no diversion limits.

Unless all diverted milk is associated with pool plants, the performance standards for such plants are not effective. The inclusion of these movements to nonpool plants as receipts at pool plants will assure the integrity of the performance standards. Also, it will provide a limit on the amount of milk a handler may attach to the market. For the foregoing reason, all diverted producer milk must be reported by the handler diverting such milk as a diversion from a pool plant. Such diverted milk would be included in the plant's receipts in determining whether such plants qualifies as a pool plant for the month.

Most of the time, a cooperative will divert milk from the pool plant of another handler. In such cases, the pool plant operator is not aware of the circumstances involved, i.e., when the milk was diverted or how much milk was diverted from the plant during the month. Since these diversions are not in the operator's control, a mechanism is provided to insure that the plant will not lose its pool status in the event the cooperative's diversions from the plant would result in nonpool status for such plant. Basically, if the cooperative fails to designate what milk should be excluded from the pool, the market administrator would exclude the quantity of diverted milk that causes the plant to lose its pool status. In such cases, the market administrator would use the same procedure adopted herein for excluding over-diversions of milk to nonpool plants.

As proposed by the cooperatives, all diverted milk would be priced at the location of the plant to which the milk was diverted. Such pricing comports with the intent of the Act, which provides for the pricing of milk at the location of the plant where the milk is received.

Since diverted producer milk may be received at a pool plant or a nonpool plant, conforming changes are needed in §§ 1032.52 and 1032.75. The Class I and uniform prices for producer milk received at a plant (pool or nonpool) will be adjusted by the amount that is applicable at the location of the plant where the milk being priced was received.

5. *Classification of certain fluid milk products and biscuit mix.* A Prairie Farms proposal to amend the fluid milk product definition and classification provisions should not be adopted. The proposal would provide a Class II classification for buttermilk used at restaurants to make biscuits as well as a Class II classification for biscuit mix, a product that is similar to buttermilk.

Under current provisions, buttermilk is a fluid milk product. Thus, butterfat and skim milk disposed of as buttermilk are priced in Class I. An exception is made for bulk fluid milk products (including buttermilk) disposed of to any commercial food processing establishments at which food products (other than milk products) are processed and from which there is no disposition of fluid milk products other than those received in consumer-type packages. Bulk buttermilk disposed of to commercial food processing establishments (which do not include restaurants) is classified as Class II. In addition, a biscuit mix product that is similar to buttermilk is classified as Class III because neither a Class I nor a Class II classification can be established for the product. A Class I classification does not apply since the product does not meet the fluid milk product definition because of certain ingredients contained in the product. A Class II classification does not apply because the product is not specified as a Class II use and does not meet the standards or criteria that are applicable to Class II milk.

Prairie Farms testified that the adoption of its proposal is necessary to clarify the classification of buttermilk and biscuit mix products that are used to make buttermilk biscuits. Under current provisions, similar products used to make such biscuits are classified in any of the three classes of use. Buttermilk is classified as Class I or Class II depending on the type of establishment that makes the biscuits, while biscuit mix is classified as Class III regardless of the type of establishment involved.

Prairie Farms testified that the impetus for its proposal stems from circumstances encountered in supplying buttermilk to McDonald's restaurants to be used to make buttermilk biscuits. The McDonald's Corporation notified Prairie Farms that as a result of a Class I classification for such buttermilk, McDonald's was considering the use of biscuit mix containing buttermilk powder in an effort to contain the cost of producing biscuits. As a result, Prairie Farms began producing a biscuit mix that is a modified buttermilk product that does not meet the fluid milk product definition, and which is classified as Class III.

Prairie Farms contends that since a Class II use applies to bulk buttermilk used by commercial food processing establishments to make biscuits, the same classification should apply to restaurants that make biscuits, provided that buttermilk is not sold in other than individualized serving containers. In this regard, Prairie Farms testified that if buttermilk is sold in a glass, a Class I classification would apply to the buttermilk distributed to such restaurant. In addition, Prairie Farms contends that biscuit mix, which is basically the same as buttermilk, should also be Class II. In the event that its proposal is adopted, Prairie Farms testified that it would probably supply buttermilk for use in biscuits rather than the biscuit mix product.

No other interested party testified on Prairie Farms' proposal. However, in their briefs, Mid-Am and NFO opposed the adoption of the proposal on the basis that it would be administratively costly and impractical to determine the use of buttermilk at restaurants to determine classification. In addition, NFO contends that adoption of the proposal would lead to possible classification changes of additional fluid milk products based on use at restaurants and other establishments such as doughnut shops and bakeries in grocery stores and delicatessens. Also NFO contends that the lowering of returns to producers that would result from adopting the proposal cannot be tolerated.

As previously stated, the primary thrust of Prairie Farms' proposal is to include buttermilk and biscuit mix used to make buttermilk biscuits in Class II. To accomplish this, Prairie Farms' proposal would treat restaurants as

commercial food processing establishments. Consequently, the classification of buttermilk disposed of to a restaurant for biscuit making would be changed from Class I to Class II. In addition, biscuit mix, which is currently Class III, would specifically be classified as Class II to agree with the classification of buttermilk for the same use. Prairie Farms contends that the need for the classification changes is to establish greater uniformity of classification of milk products used to make biscuits and to provide dairy farmers with the opportunity to continue to supply a perceived market expansion of dairy product needs for buttermilk biscuits made at restaurants, particularly fast-food eating establishments such as McDonald's.

The Southern Illinois order, as well as a large number of other orders that have essentially uniform classification provisions, does not define a commercial food processing establishment. The order does specify that such establishments cannot be milk plants and that the food products processed cannot be milk products. Also, such establishments are not to be involved in disposing of milk products other than those received in consumer-type packages. In this context, there is a reasonable degree of confidence that such establishments that receive bulk fluid milk products (including buttermilk) would not be involved in supplying milk for fluid use without the supplying handler being required to account for such milk at its fluid milk (Class I) value. This is not true, however, with respect to restaurants which prepare and serve food and dairy products in a variety of forms. Consequently, it would be virtually impossible to determine the ultimate use of fluid milk products at restaurants which are basically multiple-use users of fluid milk products just as consumers. It would be both impractical and costly to verify restaurant use of fluid milk products for order pricing purposes. Therefore, the proposal to treat restaurants as commercial food processing establishments, which extends beyond the making of buttermilk biscuits at fast-food operations, should not be adopted.

In addition to the impractical nature of the proposal, its adoption would result in a classification for buttermilk and biscuit mix under the Southern Illinois order different from the classification applicable under a large number of other orders. In this regard, official notice is taken of two decisions issued by the Assistant Secretary on February 19, 1974, concerning uniform pricing and classification provisions under 32 orders (Georgia, et al., 39 FR 8452, 8712, and 9012) and under seven orders (Chicago Regional, et al., 39 FR 8202). The Southern Illinois order was involved in these proceedings concerning the increasing need for uniform classification and pricing provisions among a large number of orders as a result of sales area expansions by plants into an increasing number of Federal milk marketing areas.

The record of the current proceeding does not demonstrate the existence of a marketing problem that would warrant a different classification for either buttermilk or biscuit mix under the Southern Illinois order than that which is provided under a large number of other orders. Plants regulated under at least seven other orders have sales in the proposed expanded Southern Illinois-Eastern Missouri marketing area while Southern Illinois regulated plants also have sales in at least seven other Federal milk marketing areas. Consequently, to the extent that it may be necessary to consider classification changes or the classification of new products such as biscuit mix, the competitive relationship among handlers and producers over a broad area is necessarily involved that cannot be addressed in an amendatory proceeding involving one market.

Prairie Farms excepted to the denial of its proposal and contended that the proposal was an attempt to alleviate the need for handlers to make a modified buttermilk product for use in biscuits. The exceptions, however, do not provide a basis for altering the conclusions concerning the impractical nature of the proposal and the regional implications involved in classification changes.

6. *Shrinkage and loss product allowance.* A proposal to establish a loss product allowance propvision, in lieu of the current shrinkage provisions, should not be adopted. Under this Prairie Farms proposal, products that are dumped or sold for animal feed, as well as any receipts for which a handler failed to establish a use (shrinkage) would be classified as Class I. In order to compensate a handler for the increase in Class I use, each handler would receive a monetary credit equal to two percent of the Class I differential adjusted for location. Under the proposal, the credit would be split between handlers who assume the loss from farm to plant (½ of 1 percent of the Class I differential) and handlers who assume plant processing and distribution losses (1.5 percent of the Class I differential).

Prairie Farms contends that its proposal would simplify handler accounting as well as the administration of the order with respect to unmarketable products and for receipts of milk for which a disposition cannot be established. Prairie Farms contends that an inordinate amount of time is spent in attempting to account for and verify losses that represent less than two percent of total receipts of milk for the market. Prairie Farms contends that under its proposal only Class II and Class III uses would have to be verified by the market administrator since all remaining receipts would be Class I, including all unaccounted for product, livestock feed, dumpage and route returns. As a result, Prairie Farms testified that handlers would not have to account for milk that is dumped, sold at salvage value for livestock feed, or route returns that ultimately may be dumped or sold at salvage value. Also, with respect to route returns of unmarketable products, Prairie Farms testified that under the proposal, such products would not have to be returned to a plant for verification which would thus eliminate a possible contamination concern. Prairie Farms also testified that the purpose of the credit is to compensate handlers for the increase in Class I use and would leave handlers in approximately the same monetary position that applies under current order provisions. No other interested party offered testimony on the proposal or commented on the proposal in briefs.

The current provisions of the Southern Illinois order pertaining to the classification of skim milk and butterfat that are dumped, disposed of for animal feed, or in shrinkage are generally uniform with those of other orders involved in the uniform classification and pricing decision, of which official notice was previously taken. A specific Class III classification applies to products that are dumped or disposed of for animal feed. With respect to shrinkage, up to two percent of handler's receipts of milk directly from producers may be assigned to Class III. In general terms, the two percent maximum shirnkage allowance is split between receiving operations and processing operations, with up to 0.5 percent permitted for receiving milk and 1.5 percent for processing milk. This division of shrinkage among handlers is necessarily set forth in substantial detail in order provisions to allocate shrinkage among responsible handlers under various buying and selling arrangements. For example, if a handler purchases milk from a cooperative association handler on the basis of scale

weights, the maximum Class III shrinkage allowance for the plant operator is 1.5 percent. The cooperative, as the receiving handler, is responsible for any difference between farm weights and butterfat tests and the weight and test at which the plant operator purchases the milk. Of this difference, up to 0.5 percent of the milk at farm weights is allowed the cooperative as Class III shrinkage. If the plant operator purchases the milk on the basis of farm weights and tests, the plant operator is permitted up to the full two percent Class III shrinkage.

The current order also provides for a method of prorating total plant shrinkage to (1) those receipts of bulk fluid milk products that are generally intended for Class I use, and on which Class III shrinkage limitations apply, and (2) certain other types of receipts generally intended for manufacturing use, such as milk from other order plants or unregulated supply plants for which a Class II or Class III classification is requested. All shrinkage associated with this latter category of receipts is assigned to Class III use, while shrinkage associated with the first category of receipts is asigned to Class I use to the extent that it exceeds the maximum amount permitted a Class III classification.

The concept of the current shrinkage provisions is relatively simple. Shrinkage up to the maximum allowance is paid for at the Class III price while any excess shrinkage is paid for at the Class I price. The additional details that are contained in the provision are necessary to accommodate various marketing arrangements and to recognize that certain receipts are intended for manufacturing uses while other receipts are generally intended for fluid uses.

The concept proposed by Prairie Farms is also relatively simple. All shrinkage, as well as livestock feed and dumped product, would be Class I under the order. A credit at two percent of the Class I differential would, in effect, result in a Class III price for such uses. Theoretically, any handler with two percent or more shrinkage would be treated the same under the proposal as under current provisions, i.e., shrinkage up to two percent would be priced in Class III while any additional shrinkage would be priced in Class I. Handlers with less than two percent shrinkage would receive a monetary gain under the proposal since the maximum credit would always be applied whereas the current privisions recognize actual shrinkage.

The primary reason for the simplicity of the proposal, relative to the current shrinkage provisions, is that the proposed order language ignores the details that are necessary to identify the shrinkage split among the buying and selling handlers who are responsible for shrinkage in receiving and processing operations. In addition, the proposal ignores the initial proration of shrinkage between those receipts that are intended primarily for manufacturing uses and those that are intended for fluid uses. This aspect of the proposal and its application to Southern Illinois handlers was not explored on the record of the proceeding. However, it would appear to be reasonable to establish possible excessive Class I use because of shrinkage at plants that receive milk primarily for manufacturing uses.

Simplification of order provisions because of a perception by Prairie Farms that current provisions are not understood by handlers generally, is not a sufficient basis for an alteration of current provisions. Also, it does not appear that this goal would be realized as modifications to the proposal would be necessary to specify the proration of shrinkage among receipts and the shrinkage split among handlers. Incorporation of these specific factors into the proposal would result in essentially the same provisions that are currently included in the order, except that livestock feed and dumped products would be excluded as Class III uses.

With respect to this latter point, the application of the order to handlers, as well as their responsibilities under the order, would be simplified since milk that is dumped or used for animal feed would be ignored. How this would affect individual handlers and plant experiences that may be encountered in receiving or processing operations is not known since only marketwide data on dumpage and animal feed is contained in the record. For one reason or another, handlers may at times have a need to dump or dispose of significant quantities for salvage value. The proposal would not accommodate any such extraordinary circumstances as these dispositions of milk would not exist under the order. Consequently, implementation of the proposal would reduce the ability of the order to accommodate individual plant experiences encountered in processing and marketing milk.

The issue of possible contamination problems as related to the handling of route returns of unusable product is a matter of serious concern. In this regard, Prairie Farms testified that changes had been made with respect to the accountability of such products under current provisions that lessens such concerns. Although there may well be valid reasons for further consideration of this issue under this and other orders, the record of this proceeding does not demonstrate a particular problem with respect to this issue. The record indicates that contamination concerns can be lessened or rectified under current provisions of the order. In any event, there is no demonstration that an entire revision of elimination of the shrinkage provisions is necessary to further deal with this issue.

In total, there is no demonstration of the existence of a marketing problem under the Southern Illinois order, or any indication that marketing conditions are materially different than under other orders that could warrant a different treatment of shrinkage, approved dumps and animal feed than under most other orders. Consequently, for all of the previous reasons, the proposal is denied.

Prairie Farms excepted to the denial of its proposal contending that it would have simplified handlers accounting and administration of the order. The exceptions, however, fail to recognize that the proposed provisions were so deficient in terms of necessary details as to be unworkable.

7. *Location adjustments.* The location adjustment provisions should be revised to specifiy that a minus 17-cent location adjustment apply in six unregulated Illinois counties that are adjacent to the Northern Zone of the marketing area. Such location adjustment should apply at plants located in the Illinois counties of Adams, Brown, Cass, Pike, Schuyler and Scott. This change in pricing will increase the Class I and blend prices by three cents per hundredweight at one pool distributing plant that is operated by Prairie Farms at Quincy, Illinois (Adams County). This will result in pricing at Quincy being the same as at other plants that are located in the Northern Zone of the marketing area. No other location adjustment changes should be made.

Land O'Lakes, Inc. (LOL), and Prairie Farms, two cooperative associations that represent producers and operate plants under the order, proposed location adjustment changes to the order. Briefly, LOL proposed that a minus 17-cent location adjustment should apply at Quincy. Also, LOL proposed that a minus location adjustment based on mileage should apply at all supply plants located outside the marketing area. Prairie Farms proposed that the current plus 9-cent location adjustment at Carbondale, Illinois (Jackson County) should be increased to 24 cents.

Basically, both cooperatives contend that the changes are necessary to

correct perceived imperfections to location adjustment changes that were initially implemented on August 1, 1986, to conform location adjustment provisions with higher Class I differentials mandated by the Food Security Act of 1985. In addition, the cooperatives contend that certain current location adjustments under the order are not consistent with the findings and conclusions of decisions involving this and other nearby markets that also involve location adjustment issues as a result of mandated changes to Class I differentials. In particular, the cooperatives contend that current provisions are in conflict with recognition given to changes in historical price relationships that occurred as a result of changes to Class I differentials as well as to conclusions concerning the incentive for certain milk supplies that are associated with the Southern Illinois market to become a source of supply for more deficit, higher-priced southern markets. Consequently, as a perspective for consideration of the proposals, official notice is taken of the following decisions issued by the Deputy Assistant Secretary concerning location adjustment changes necessitated by Class I differential changes: (1) Emergency Final Decision, Memphis, Tennessee, issued May 8, 1986, published May 16, 1986 (51 FR 17982); (2) Final Decision, Texas, et al., issued October 30, 1986, published November 5, 1986 (51 FR 40176); and (3) Final Decision, Chicago Regional et al., issued December 5, 1986, published December 11, 1986 (51 FR 44611).

LOL proposed that the minus location adjustment at Quincy should be 17 cents per hundredweight rather than the 20 cents that applies to such plant under the order. LOL notes that the current 20-cent location adjustment results in a three-cent lower price at Quincy than at other plants in the Northern Zone of the marketing area whereas, historically, the location adjustment for the Northern Zone and Quincy has been identical. LOL contends that the three-cent lower price at Quincy, relative to the Northern Zone, presents a hardship to LOL producers who supply the Quincy plant from northern production areas around Spring Valley, Minnesota. LOL also contends that its members have not benefited to the same extent as other Federal order producers from increases in Class I differentials. Consequently, LOL argues that a least the price at Quincy should be increased to the same price level that applies in the Northern Zone.

LOL also proposed that minus location adjustments based on mileage should be applied at all supply plants that are located outside the marketing area. Under current provisions no location adjustments apply in the heavy milk producing areas in southern Missouri, specifically, any Missouri territory that is south and east of Interstate Highway 44. For all other territory outside the marketing area, minus location adjustments are established on the basis of mileage between the plant location and the nearer of three basing points.

As a result, LOL contends that not all distant supply plants and market suppliers are being treated equally under the order. For example, a minus 82-cent location adjustment applies to LOL's Spring Valley, Minnesota supply plant while no location adjustment applies to a Mid-Am supply plant at Cabool, Missouri (Texas County). LOL contends that, based on distance, at least a minus 36-cent location adjustment should apply at Cabool. LOL contends that if a lower value of milk is to be recognized at distant plants relative to distance from the population centers of the market, location adjustments should be applied in all directions from the market, not only in a northerly direction.

LOL testified that the price alignment considerations (establishing essentially the same price at specific locations under a number of Federal orders) are important with respect to distributing plants but that other factors are important with respect to supply plants. LOL testified that supply plant operators decide to pool such plants on those markets where their total returns are greatest, which includes consideration of the blend price applicable at the supply plant for milk which is pooled but not shipped to distributing plants. LOL testified that, as a result of no applicable location adjustment at Cabool, the Southern Illinois order blend price was 15 to 16 cents per hundredweight in excess of the blend price at Cabool under the Southwest Plains order. Consequently, LOL contends that there is an economic incentive for milk supplies in southern Missouri to continue to be associated with the Southern Illinois order. LOL argues that this is contrary to the stated intent of officially noticed decisions, which according to LOL indicate that southern Missoui milk should be used to supply southern markets while the Southern Illinois order should reach to northern production areas for a source of supply. Therefore, LOL concludes that the intent to encourage such procurement arrangements would be accomplished by providing a minus location adjustment at Cabool and all of southern Missouri. LOL concludes that a reduced price in southern Missouri under the Southern Illinois order would discourage such milk from being a source of supply or from being pooled under the Southern Illinois order. Consequently, such milk would have to seek out more southern markets while Southern Illinois order handlers would have to obtain milk from northern procurement areas.

Mid-Am opposed the proposal to establish minus location adjustments in southern Missouri. Mid-Am contends that such action would establish an inappropriate economic signal for Southern Illinois handlers to obtain milk supplies from such area. Mid-Am testified that milk from such area is needed by and is being shipped to more deficit southern markets in Arkansas, Tennessee, Georgia, Florida and Texas. Also, Mid-Am contends that adoption of LOL's proposal would be inconsistent with the overall Federal order pricing structure which provides for increasing prices from north to south. Mid-Am also opposed the location adjustment change at Quincy although no specific reasons for such opposition were presented.

Prairie Farms proposed that a plus 24-cent location adjustment be applied to Jackson County Illinois. Prairie Farms contends that the increase from the current 9-cent adjustment at its Carbondale supply plant is necessary to reflect the location value of milk in the southern portion of the marketing area. Prairie Farms testified that the price at Carbondale (which reflects a $2.01 Class I differential value) is too low relative to prices at such location under other orders. Prairie Farms testified that distance and aligment rates (rates for determining location adjustments at distant plants under Federal orders) easily establish that the location adjustment at Carbondale should be increased. For example, based on the 120 miles between Alton and Carbondale and the 2-cent rate for determining location adjustments, the Class I differential value should be $2.16 at Carbondale. Likewise, Prairie Farms testified that the Class I differential value at Carbondale based on distances from Paducah and Memphis would be $2.215 and $2.308, respectively.

Prairie Farms also testified that the area around Carbondale (as well as the entire State of Illinois) is a deficit supply area. Basically, Prairie Farms contends that the curent price at Carbondale is too low to attract a supply of milk and that the appropriate price at Carbondale should reflect the increase in milk values from north to south under the

Federal order pricing structure. Prairie Farms further testified that the curent blend price at Carbondale is too low relative to other markets and that both Prairie Farms and Mid-Am have lost members in the area to another cooperative association, presumably for use in more southern markets. Prairie Farms further indicated that in the event its proposal was not adopted, consideration would have to be given to pooling the Carbondale plant under the Paducah, Kentucky order or some other southern market. Also, Prairie Farms indicated that consideration would have to be given to operating the Carbondale facility as a distributing plant as it once was. Prairie Farms testified that if such a distributing plant could continue to be regulated under the Southern Illinois order with current pricing provisions, it would have a substantial competitive pricing advantage over distributing plants in more southern markets. Prairie Farms concludes that current and prospective marketing developments represent disorderly marketing conditions as a result of the failure of the order to establish an appropriate location value of milk at Carbondale.

NPO opposed Prairie Farms pricing proposal for Carbondale on the basis that the proposal would reduce the blend price to all producers supplying the market. In its brief, NFO argued that the effect of the proposal, in conjunction with other pooling proposals, would be to draw supplies to milk in a deficit market to a manufacturing plant at Carbondale. Mid-Am took no position on the proposal but indicated in its brief that if the Prairie Farms proposal is adopted, the same plus location adjustment should apply to a Mid-Am supply plant located at Jackson, Missouri (Cape Girardeau County) which is west and south of Carbondale.

Resolution of the location adjustment proposal requires a consideration of the pricing structure employed under the Federal order system. A thorough explanation of the pricing structure, as well as the purpose of location adjustments is clearly set forth in the officially noticed decisions concerning regional hearings that were held to consider proposals to amend location pricing provisions to conform with the Class I differentials mandated by the Food Security Act of 1985. Briefly stated, an alignment of Class I differentials necessarily exists among Federal order markets for economic reasons. The Class I differential in any market, in the long run, cannot exceed the cost of milk in an alternative market plus the cost of hauling bulk milk from such alternative source of supply. Consequently, Class I differentials increase from north to south in recognition of the substantial supplies or relatively lower cost milk in Minnesota and Wisconsin that are an actual and potential source of supply for markets to the south. The Class I price (the specified order Class I differential plus the basic formula price for the second preceding month) is applicable at a specific location and is intended to attract an adequate supply of milk to such location. To the extent that milk is received at other locations, the Class I price and blend price to producers are adjusted to reflect its economic value at such location relative to other locations. Thus, location adjustments reflect the cost of hauling milk from where it is produced to where it is needed for processing. In other words, location adjustments reflect the value of the economic service provided by producers to handlers at varying locations.

The Southern Illinois order provides for a zone pricing system within the current marketing area, which would be expanded to include the additional territory that would be added to the marketing area. The Base Zone, which includes 25 counties in the central portion of the marketing area, extends across the State of Illinois from the Missouri to the Indiana State borders. The order's $1.92 Class I differential applies throughout the Base Zone. There are two distributing plants and two supply plants located within the Base Zone. To the north of the Base Zone, the Class I price is reduced by 17 cents per hundredweight to reflect the fact that such area is nearer to northern production areas. This Northern Zone consists of 13 counties that extend from Morgan County on the west to Vermilion and Edgar counties on the east that border the State of Indiana. There are two distributing plants and one supply plant located in such zone. For plants that are located in the marketing area south of the Base Zone, a plus 9-cent location adjustment applies to reflect increasing value of milk to the south and the greater costs incurred in shipping milk to such area versus plants in the Base Zone. The Southern Zone also includes territory around the St. Louis metropolitan area that is directly west of the Base Zone. There are five distributing plants in the St. Louis area and a distributing plant and supply plant located south of St. Louis (Randolph and Jackson Counties) included in this pricing zone. Consequently, the marketing area pricing structure provides for increasing prices from north to south, and with the exception of the St. Louis area, provides for no change in prices on a west-east axis.

For plants located outside the marketing area, the Base Zone price is reduced on the basis of mileage from the nearest of Alton, Robinson, or Vandalia, Illinois. The location adjustment is minus 20 cents for plants that are 100 miles or more from such basing points and an additional two cents per 10 miles beyond 110 miles. As a result of such provision, a minus 20-cent location adjustment applies to a Prairie Farms pool distributing plant at Quincy that is outside the marketing area in Adams County, Illinois. Also, minus location adjustments of 70 and 82 cents apply at two supply plants that are located at Waukon, Iowa and Spring Valley, Minnesota, which are the two most distant supply plants serving the market.

Such provision for determining location adjustments at distant plants is not applicable for plants located in southern Missouri. Specifically, no location adjustment is applicable for plants located outside the marketing area in the State of Missouri that are located south and east of Interstate Highway 44. As a result no location adjustments are applicable at two Mid-Am supply plants located at Cabool (Texas County), and Jackson (Cape Girardeau County), Missouri. The order also provides for a minus 17-cent location adjustment for any plant located in the Indiana Counties of Fountain, Parke, Vermillion and Warren. Such counties are adjacent to and east of the Northern Zone of the marketing area, although no pool plants are located in such area.

The 3-cent change in the location adjustment at Quincy was supported on the basis of the historical pricing structure under the Southern Illinois order. No emphasis was placed on whether the price at Quincy need be any different than prices at other plants in the Northern Zone in order to attract a supply of milk from northern procurement areas. In this regard, the minus 20-cent location adjustment at Quincy was adopted on the basis that Quincy is nearer to northern supply areas than other plants regulated under the order.

A primary factor in determining the appropriate location adjustment at any plant is whether the resulting price is sufficient to attract supplies of milk from procurement areas that are also necessarily a source of supply for other regulated plants. Thus, with respect to pricing at Quincy, a relevant comparison is the distance between northern procurement areas and Quincy and the distance between the same procurement areas and Bloomington, Illinois, where the northernmost pool distributing plant

is located. Quincy is located nearer to the Spring Valley, Minnesota (near Austin) supply area than is Bloomington. However, other locations in northeastern Iowa, southeastern Minnesota and southwestern Wisconsin are virtually equidistant from Bloomington and Quincy. For this purpose, official notice is taken of Mileage Guide 13 issued by the Household Goods Carriers' Bureau and mileage between cities that represent northern production areas (Lansing, Iowa; Austin, Minnesota; La Crosse and Prairie du Chien, Wisconsin) and Bloomington/Quincy. As a whole, such mileages indicate that prices at Quincy and Bloomington should be approximately the same.

It is noted that the westernmost located distributing plant regulated under the order is at Quincy while the northernmost plant is at Bloomington. As a result, Quincy is nearer to certain supply areas in Minnesota and Iowa while Bloomington is nearer to sources of supply in Wisconsin. However, no recognition should be given to the extent to which Quincy is located to the west of the marketing area. Historically, the Southern Illinois order has provided for no price differentiation on an east/west basis. Such a price structure extended beyond the marketing area boundaries to include Quincy as well as territory in Indiana that is east of the marketing area. In addition, the use of the three basing points that are aligned on an east/west axis has the effect of limiting any east/west price changes in northern procurement areas. Such east/west pricing in this area was further emphasized by the Congressionally mandated Class I differentials that established a $1.92 Class I differential for the Southern Illinois order and the Greater Kansas City order to the west. Consequently, for all of the above reasons, the location adjustment at Quincy should be changed from minus 20 cents to minus 17 cents.

The location adjustment change should not be limited to the counties of Adams and Schuyler as was proposed. Prior to the most recent order amendment, the order specified that the same location adjustment for Quincy should apply to all territory in Illinois that is outside the marketing area and south of the northern boundaries of Adams and Schuyler Counties. Such language, which covered a broader area, was unclear since some territory in the southern part of the State is also outside the marketing area. Consequently, the attached order language specifies that the minus 17-cent location adjustment should apply to the six Illinois counties that are specified at the beginning of the issue.

The proposal to increase the plus location adjustment at Carbondale from nine cents to 24 cents, which would provide for a Class I differential of $2.16, should not be adopted. Basically, Prairie Farms contends that the price at Carbondale is too low (i.e., misaligned) in terms of the increase in milk value from north to south in this region of the country. Basically, Prairie Farms is correct in its claim that the current price of milk is undervalued at Carbondale, although not by as much as the 15-cent increase that is proposed.

The officially noticed decisions concerning the Texas and certain other orders (including the Memphis, Tennessee order) indicate that the mandated Class I differential changes resulted in the greatest increases among Federal order markets in a straight north to south direction with basically no change from east to west from Chattanooga to Oklahoma City. In this region of the country, the north/south alignment rate among Federal order markets approaches three cents per hundredweight per 10 miles, which also represents a conservative estimate of the cost for hauling bulk milk. For example, the difference between the Class I differential at Fulton, Kentucky, Memphis and New Orleans reflect a rate of about three cents per hundredweight per 10 miles. Also the rate between Memphis and St. Louis reflected a rate of 2.7 cents per 10 miles. In this connection, it is noted that the rate between St. Louis and Memphis is about 2.9 cents per 10 miles without regard to the plus 9-cent adjustment at St. Louis that is necessary to attract milk to this major consumption center.

Since location adjustments are intended to reflect the cost of hauling milk from where it is produced to where it is needed, the use of a 3-cent per 10-mile hauling cost would derive an appropriate location value of milk at Carbondale relative to southern markets. Based on the 213 miles (22–10-mile zones) between Carbondale and Memphis, the Class I differential value at Carbondale would be $2.11 ($2.77 Memphis Class I differential minus 66 cents). Based on Fulton, Kentucky, where a distributing plant regulated under the Paducah order is located, the Class I differential value at Carbondale would be approximately $2.09 ($2.39 minus 30 cents for the 100 miles between Fulton and Carbondale).

Any consideration of the location value of milk at a particular plant, such as Carbondale, necessarily involves the relationship between the price at such plant and prices at other nearby plants. Significant price differences between nearby plants could affect the ability of plants to attract adequate supplies of milk for fluid use, which is a primary function of Federal milk marketing orders.

The nearest plant to Carbondale is loated at Chester, Illinois (Randolph County). Such plant is a distributing plant that is currently in the same price zone as Carbondale. Chester is 38 miles northwest of Carbondale. However, as indicated previously, western direction is not a relevant factor in establishing price differences between plants as the order provides for no price variation on an east/west direction. In terms of its northern direction, Chester is about eight miles further north from Memphis than is Carbondale. In terms of north/south alignment, the Class I differential value at Chester based on Memphis would be $2.08. Pricing at Chester, however, was not an issue open for consideration at the hearing.

Both the Chester and Carbondale plants would be expected to procure supplies of milk from the same areas that are characterized as deficit supply areas. Chester Dairy, as a distributing plant, is primarily engaged in supplying the fluid milk needs of the market. Carbondale, while it supplies the fluid milk needs of the market by shipping milk to distributing plants, is primarily engaged in manufacturing Class II products. Also, in conjunction with the revision to the pooling provisions set forth under issue 2, required shipments from the Carbondale plant would be minimal in terms of receipts in the individual plant. Consequently, a location adjustment increase at Carbondale would be inconsistent with a primary objective of Federal milk marketing orders. Establishing a higher price at Carbondale, relative to Chester, would provide an incentive for milk to move to Carbondale for use in manufactured products rather than to the distributing plant for use in fluid milk products.

In addition to the Carbondale supply plant, another supply plant operated by Mid-Am is located in Jackson, Missouri (Cape Girardeau County) which is west and south of Carbondale. Such territory is being added to the Southern Zone of the marketing area which results in the same location adjustment at both of the supply plants. Any increase in the location adjustment at Carbondale would appear to be appropriate for the Jackson supply plant because of the constant east/west price surface. This would result in the highest minimum order prices being applicable at two

supply plants located in the southernmost portion of the marketing area that maintain their association with the market by shipping milk northward to distributing plants. Although establishing a higher price level at such plant would be consistent with the north/south price alignment, it would appear to be unreasonable to provide an economic incentive under the order for milk to be shipped to southern supply plants for ultimate shipments to northern distributing plants.

Although there may have been some loss of membership by Prairie Farms and Mid-Am to southern markets, there is no indication that distributing plants are unable to attract sufficient supplies of milk for fluid use under the current price structure. In addition, it would be expected that producers in the southern portion of the marketing area, and possibly the supply plants, would seek higher-priced markets to the south. Any such changes in milk movements to southern markets would be consistent with the overall pricing structure and are not evidence of disorderly marketing conditions. Consequently, for all the previous reasons, no change should be made to the plus location adjustment at Carbondale.

The LOL proposal to establish a minus location adjustment in southern Missouri based on mileage also should not be adopted. The proposal, which would result in a minus 36-cent location adjustment at Cabool, Missouri (Texas County), is totally inconsistent with the value of milk in such area under the overall Federal order pricing structure that exists.

The value of milk at Springfield, Missouri, as well as across southern Missouri, was considered at a public hearing held to consider location adjustment changes under the Texas and six other Federal order markets. Basically, the officially noticed decision involving these markets concluded that as low a value of milk as possible should be established for such area in recognition of the heavy milk production in the area. Consequently, a 3-cent per 10 mile hauling cost was used to establish the location adjustment at Springfield under the Southwest Plains order. The Class I differential value at Springfield could not be lower than $2.19 because of pricing constraints established by the Congressionally mandated Class I differentials and the existence of distributing plants located south of Springfield. Other southern Federal order markets also recognize such location value of milk at Springfield and southern Missouri and rely on production in the area as a source of supply.

The current Southern Illinois order provides for no location adjustment at Cabool and southern Missouri resulting in a $1.92 Class I differential value. This is already 27 cents below the location value of milk in such area under the Southwest Plains and other southern markets. However, it is not an uncommon practice under Federal orders to provide for no location adjustment in southern areas that are outside the marketing area. Establishing a plus adjustment outside the marketing area to recognize a higher milk value would be inconsistent with the pricing objective to attract supplies of milk to the major population centers of the market. Also, establishing a minus adjustment to the south is in conflict with the increasing value of milk from north to south and provides a pricing incentive for milk to move from south to north rather than from north to south. Consequently, the application of no location adjustment in southern areas outside the marketing area resolves a conflict between the overall pricing structure and the pricing structure of an individual market.

The basic purpose of LOL's proposal is to establish a lower price at Cabool so that Mid-Am would be discouraged from pooling the plant and milk supplies in the area on the Southern Illinois order. LOL's complaint is that the Southern Illinois order blend price exceeds the Southwest Plains order blend price at Cabool which attracts such milk to the Southern Illinois market. In this connection, a blend price is a measure of a market's supply/demand situation at a given point in time that is a response to any number of factors that affect the supply of and demand for milk and dairy products. A blend price comparison among markets, which merely illustrates different varying supply/demand relationships among markets, is not in itself a sufficient basis to change location adjustments. In addition, a blend price comparison at a specific location, does not reflect the additional transportation costs that are incurred in shipping milk to various markets. the 15- to 16-cent blend price advantage under the Southern Illinois order at Cabool may well be absorbed by the cost of hauling milk to Southern Illinois order distributing plants. Furthermore, net returns at Cabool may well be greater if milk is shipped to higher-priced southern markets. This aspect of additional hauling costs to alternative markets was not explored at the hearing.

Milk supplies in southern Missouri are being shipped to higher-priced southern markets. The fact that the Cabool plant is pooled on the Southern Illinois order may reflect a lack of sufficient outlets to the south. Also, significant changes have occurred that have affected marketing conditions in Springfield and southern Missouri. These include the termination of the St. Louis-Ozarks order, the closing of a distributing plant in Springfield, and the changes to the Class I differentials. It may be that sufficient time has not yet elapsed to allow marketing adjustments to reflect these significant developments. In any event, it cannot be concluded that the pooling of the Cabool plant on the Southern Illinois order is inconsistent with the pricing incentive for southward movements of milk in the long run.

LOL contends that milk that is priced at the Cabool supply plant, but which is not shipped to southern Illinois order distributing plants, returns a blend price that encourages the pooling of additional supplies of milk under the order. In this regard, supply plants are pooled under the order only if they perform the service of supplying a sufficient volume of milk to distributing plants. Consequently, to the extent that not all of a supply plant's receipts need be shipped to distributing plants, this is a pooling issue rather than a pricing issue. Such a situation exists with respect to all supply plants that perform adequate service to the fluid milk market.

For all of the previous reasons, LOL's proposal is denied.

Prairie Farms filed exceptions to the denial of proposals to increase the price of milk at Carbondale and to reduce the price of milk at Cabool. Prairie Farms contends that findings with respect to appropriate price levels at the two locations are inconsistent with each other.

With respect to the Carbondale location, the plus 9-cent location adjustment that currently applies does reflect an increasing value of milk from north to south. However, the proposed increase in the location adjustment cannot be adopted for a number of reasons previously set forth in this decision. With respect to the Cabool location, the decision indicates that there is a conflict between the intra-and-inter market pricing structures that is best resolved by providing for no location adjustment at such location.

8. *Seasonal payment plan for producers.* The proposed seasonal payment plan (Louisville plan) to encourage dairy farmers to adjust production to better match consumption

patterns should not be adopted. In addition to other factors, there is basically no producer support for the implementation of such a plan under the order.

Under the proposal, up to 90 cents per hundredweight would be deducted from the uniform prices to producers during the spring months of April-June. The actual amount deducted could not result in the uniform price being less than the Class III price at any location. One-third of the amount deducted would be added to the uniform prices for each of the following fall months of September-November.

Prairie Farms, a cooperative association whose members supply about 20 percent of the market's milk, testified that the proposal was being offered as a first step to provide some type of regional or national seasonal incentive program to level-out the milk production of dairy farmers. Prairie Farms contends that the implementation of such a plan into a national program tailored to regional production patterns would address marketing problems associated with surplus production in the spring and milk shortages in the fall. Prairie Farms testified that tailoring milk production to milk needs by months would result in greater marketing efficiencies in all phases of the milk industry and reduce costs associated with balancing the fluid milk needs of Federal order markets. In its brief, Prairie Farms stated that, because the proposal has regional implications, it should not be implemented under the Southern Illinois order until Federal milk orders covering the states of Illinois, Wisconsin, Minnesota, Iowa, Missouri, Indiana, Kentucky, and Tennessee have similar payment provisions.

No interested party disagreed with the basic intent of the proposal. However, three cooperative associations that supply the market (AMPI, Mid-Am and NFO) and a proprietary handler who operates plants regulated under nearby orders (Kraft, Inc.) opposed the adoption of the proposal. These parties contend that the proposal would create marketing problems for handlers regulated under other orders since the procurement area for the Southern Illinois market overlaps with the procurement areas for a number of other Federal orders. They contend that the proposal would cause milk to shift to the Southern Illinois market during the fall months and away from such market during the spring months, thereby disrupting supply arrangements in other markets. Mid-Am also opposed the proposal because the deduction from the uniform prices during the spring would be limited so that the uniform price would not be less than the Class III price. As a result, Mid-Am notes that producers who supply distant plants would have less deducted from the uniform price during the spring than producers who supply nearby plants while all producers would receive the same addition to the fall uniform prices. Consequently, Mid-Am contends that there would be a disparity in returns to producers as a result of the proposal.

In this connection, LOL testified that it would oppose the proposal if the spring deduction was not specifically limited to prevent uniform prices from being less than the Class III price at distant locations. LOL contends that it would make no sense to produce Grade A milk for the fluid market if the returns to producers were less than what could be obtained from supplying distant manufacturing plants. LOL also testified that it had no position on the seasonal payment plan if the spring deductions were limited as proposed.

Implementation of the seasonal payment plan would result in substantial inequities among producers who supply the market. If the proposal had been in effect during 1986, producers who supply the most distant supply plant on the market would have had their uniform prices reduced by 12 to 28 cents per hundredweight during the April-June period. At the same time, producers who supply plants in the Base Zone of the marketing area would have been subject to a 90-cent reduction in returns. All of the producers would have received the same additions to the uniform price during the following months of September-November. Consequently, there would be a disproportionate sharing among producers of the costs and benefits associated with seasonal pricing that is intended to encourage a different pattern of production.

It is not at all clear that the proposal would stimulate individual producers to change production patterns to produce realtively less milk in the spring and more milk in the fall. In the absence of similar payment plans in nearby orders, it would appear the primary effect of the proposal would be to create a shifting of producers among markets. The supply area for the Southern Illinois market would expand during the fall months, because of higher blend prices relative to other markets, and contract during the spring because of lower blend prices relative to other markets. In effect, as a result of such shifting of supplies, other Federal order markets and their producers would bear the burden of carrying the spring reserve supplies of milk for the Southern Illinois market. Although producers who supply the Southern Illinois market during the spring would likely benefit to some extent by the removal of milk supplies, their returns during the fall would be dissipated by additional milk that would be attracted to the market becasue of the additional funds that would be included in the uniform price. Basically, implementation of the proposal would introduce an inequitable element between those producers who are advantagelously located to shift among markets and those producers who, for one reason or another, continue to supply the same market throughout the year.

The supply area for the Southern Illinois market overlaps with the procurement areas of at least the Central Illinois, Chicago Regional, Iowa, Southwest Plains and Upper Midwest Federal order markets. Seasonal adjustments would result in the Southern Illinois order blend price being substantially higher than the blend price under these orders during the fall months and substantially lower during the spring months. Consequently, implementation of a Southern Illinois seasonal payment plan would disrupt the pricing and procurement activities of handlers regulated under other orders who rely on supplies of milk that are intermingled with milk supplies that are and could become associated seasonally with the Southern Illinois market. The degree to which the order milksheds overlap prohibits any consideration of a seasonal payment plan under the Southern Illinois order.

Prairie Farms filed exceptions to the previous findings. Prairie Farms disagrees with the conclusion that the proposal might not encourage producers to change their production patterns and also contends that other provisions of the order would tend to limit the amount of milk that could shift to the Southern Illinois market during fall months. Nevertheless, Prairie Farms agrees that the proposal needs to encompass a larger area to be effective. Thus, the exceptions do not provide a basis for altering either the previous conclusions or the denial of the proposal.

In addition to not being compatible with other orders, there is no indication that a seasonal payment plan is necessary for the Southern Illinois order. Although milk production and sales vary seasonally, it cannot be concluded that there is a significant seasonal marketing problem. There is no demonstration that the market requires additional milk supplies during certain periods of the year or that the reserve supplies of milk

associated with the market during other times are excessive. Thus, there is no demonstration of the existence of disorderly marketing conditions in handling the milk associated with the market on a seasonal basis. Consequently, the proposal is denied.

9. *Definition of inventory.* The proposal to provide for an "inventory" definition should not be adopted. However, a conforming change should be made in connection with this hearing to clarify the "route disposition" definition of the order.

An inventory definition was proposed by Prairie Farms and five other cooperative associations (AMPI, LOL, Mid-Am, Midwest, and Wisconsin Dairies) that represent about 90 percent of the milk regulated under the order. Since the proposal is relevant only to distributing plant operations, testimony concerning the need for the proposal was limited to experiences encountered by Prairie Farms as none of the other cooperative associations operate distributing plants under the order. No other handlers who operate distributing plants presented testimony on the proposal.

The order contains a "route disposition" definition. Such definition is necessary since the proportion of a distributing plant's receipts of milk that is disposed of as route disposition (sales of fluid milk products) determines whether the plant should be regulated under the order. Under current provisions, route disposition occurs when fluid milk products leave the premises of a distributing plant. Thus, at the end of the month, only products that remain at the plant represent inventory.

Basically, Prairie Farms disagrees with this interpretation of the order and contends that an inventory definition is necessary to recognize the marketing practices employed by Prairie Farms and the distinction that Prairie Farms makes between route disposition and inventory. Under the proposal, inventory would consist of all fluid milk products that are still in the possession and control of the handler regardless of where the products are located (except for retail outlets).

Prairie Farms contends that current provisions cause a problem for handlers in reporting the extent to which sales are made in the marketing area, in other marketing areas, or in nonfederally regulated territory. Prairie Farms contends that it may be several days after products leave a plant before the actual sales area is known, particularly if the product moves through intermediate distribution points for delivery to retail outlets. Prairie Farms contends that the problem can be particularly acute when the regulatory status of the plant under this or another order is at stake.

Prairie Farms also contends that current provisions result in identical products being priced differently depending on whether the product is disposed of or maintained in inventory. In this regard, Prairie Farms considers fluid milk products at its various branches (intermediate distribution points) as well as such products at its processing plants at the end of the month to be inventory. Products at the plant are priced in Class III while products that Prairie Farms considers to be inventory at its branches are priced as Class I since such products at branches represent route disposition under the order. Prairie Farms contends that this is confusing to its personnel and requires the cooperative to have two different prices for its inventory in accordance with accounting procedures to value inventory at costs.

Prairie Farms also contends that current procedures provide an incentive for handlers to use inventories to take advantage of anticipated changes in prices. Prairie Farms contends that handlers will hold as many fluid milk products as possible as Class III inventory at a plant at the end of a month and dispose of such products the next month when the Class I price is lower.

The reasons provided by Prairie Farms do not provide a sufficient basis for adoption of the proposal. Implementation of the proposal would change nothing with respect to a handler incentive to keep products on the premises of a plant to take advantage of a lower price. Also, the contention of the existence of a reporting problem with respect to the ultimate sales area of fluid milk products is not convincing. It would be expected that handlers would know the sales areas of their plants. Also, the significant expansion of the marketing area would mitigate the extent to which there may be a limited degree of difficulty with sales routes that cross marketing area boundaries. Such marketing area expansion also lessens the degree of urgency and precision that may be necessary to determine whether certain plants should be regulated under this or another order.

Under current provisions fluid milk products that Prairie Farms considers to be inventory are priced at two different levels, depending on whether the products are on the premises of a plant (Class III) or at a distribution point (Class I). However, this does not appear to be all that important as an issue since most of the inventories are maintained at plants (80 percent) with relatively little being maintained at branches (20 percent) within the Prairie Farms system of operation. It was also estimated that as little as 1.6 percent of the producer milk on the market is in packaged fluid milk products inventory off plant premises. Furthermore, an expansion of inventories to include products at branches or distribution points would have virtually no impact on the market since such inventories would become route disposition the following month.

Adoption of the proposal to accommodate the limited volume of inventory at branches must be viewed in the context of what is administratively practical under the order. As previously stated, the only purpose of the route disposition definition is its use in determining whether distributing plants are sufficiently associated with the market to be regulated. The current interpretation that disposition occurs when products leave a plant premises is easily determined and is a practical application of the order. Adoption of the proposal would essentially result in an extension of the 11 distributing plants' coolers and warehouses to as many as 30 additional locations. With respect to Prairie Farms, its four distributing plants would be extended to include an additional 15 to 20 locations at which a relatively minor proportion of its inventories are maintained. Thus, an unnecessary administrative burden would be incurred for essentially no apparent useful purpose. Also, a non-uniform application of the order would result relative to handlers who utilize their own branches and those whose milk moves through other distribution points.

The current application of the order is administratively practical and uniform among handlers, thus the proposal is denied. In addition, the route disposition definition should be revised to exclude current order language that, according to Prairie Farms, strongly implies that route disposition occurs when fluid milk products leave a distribution point rather than when such products leave plant premises.

Prairie Farms filed exceptions to the denial of its proposal which was intended to require that product maintained at branches at the end of the month be treated as inventory rather than as route disposition. Prairie Farms reiterated its claim that the proposal would recognize generally accepted accounting practices and eliminate an unnecessary recordkeeping burden for handlers. In its exceptions, Prairie Farms included information that is not contained in the record of the proceeding as well as a policy change

relative to this issue for a number of other Federal order markets that were not involved in this proceeding. Prairie Farms requested that a policy directive be issued to allow handlers regulated under this and other orders a choice of accounting practices with respect to the treatment of inventories.

As previously stated, the basis for the proposal is Prairie Farms disagreement with the current interpretation of the order that route disposition occurs when product leaves the premises of a plant. Thus, the proposal would be a direct contradiction to the current application by requiring that any products that were still in the possession and control of any handler would be inventory regardless of where the products were located, except for retail outlets.

The fact that there are varying applications of similar provisions under other orders does not provide a basis for an amendment to the Southern Illinois order. Such other interpretations and the existing marketing circumstances relevant to the issue are not contained in the record of this proceeding. This record contains evidence of only the economic and marketing conditions existing in the Southern Illinois market that relate to the proposal. As previously stated, the current interpretation and application of the order is reasonable and administratively practical in terms of the identified marketing conditions.

10. *Miscellaneous and conforming changes*— (a) *"Reload point" definition.* The "reload point" definition should be deleted as proposed by cooperative associations that represent 90 percent of the milk pooled under the order. There was no opposition to the proposal.

The current definition provides that a reload station, which is located on the premises of a milk plant that is using equipment to receive, cool, store and process milk during the month, be considered a single operating unit under the order. This definition could cause a reload point to be considered part of a supply plant because the reload station is located adjacent to a plant that is using equipment to receive and process milk.

Removing the provision will allow a handler to utilize the premises of a manufacturing plant to reload milk for delivery to the central market. In some cases, this could be the most favorably located facility to perform the reloading operations. Also, it will allow handlers to avoid the cost associated with locating an appropriate site to construct a separate reload station. In addition, it will facilitate the efficient assembly of milk from distant farms for movement to the market's distributing plants.

Elimination of the "reload point" definition will give the market administrator the flexibility to evaluate each reloading operation individually on the basis of how the milk is handled at that location. The market administrator's determination about whether a reload point should be considered a supply plant would be established on the basis of how the milk actually is handled at the reload station rather than merely because the reloading is done on the premises of a plant. Affording the market administrator this discretion will provide the regulatory flexibility to meet changing marketing conditions.

(b) *Basic formula price.* The last sentence of the basic formula price provision states that for the purpose of computing Class I prices the basic formula price shall not be less than $4.33. This floor under the basic formula price is outdated. Accordingly, the obsolete language should be and hereby is eliminated, as proposed.

Rulings on Proposed Findings and Conclusions

Briefs and proposed findings and conclusions were filed on behalf of certain interested parties. These briefs, proposed findings and conclusions and the evidence in the record were considered in making the findings and conclusions set forth above. To the extent that the suggested findings and conclusions filed by interested parties are inconsistent with the findings and conclusions set forth herein, the requests to make such findings or reach such conclusions are denied for the reasons previously stated in this decision.

General Findings

The findings and determinations hereinafter set forth supplement those that were made when the Southern Illinois order was first issued and when it was amended. The previous findings and determinations are hereby ratified and confirmed, except where they may conflict with those set forth herein.

(a) The tentative marketing agreement and the order, as hereby proposed to be amended, and all of the terms and conditions thereof, will tend to effectuate the declared policy of the Act;

(b) The parity prices of milk as determined pursuant to section 2 of the Act are not reasonable in view of the price of feeds, available supplies of feeds, and other economic conditions which affect market supply and demand for milk in the marketing area, and the minimum prices specified in the tentative marketing agreement and the order, as hereby proposed to be amended, are such prices as will reflect the aforesaid factors, insure a sufficient quantity of pure and wholesome milk, and be in the public interest;

(c) The tentative marketing agreement and the order, as hereby proposed to be amended, will regulate the handling of milk in the same manner as, and will be applicable only to persons in the respective classes of industrial and commercial activity specified in, a marketing agreement upon which a hearing has been held; and

(d) All milk and milk products handled by handlers, as defined in the tentative marketing agreement and the order as hereby proposed to be amended, are in the current of interestate commerce or directly burden, obstruct, or affect interstate commerce in milk or its products.

Rulings on Exceptions

In arriving at the findings and conclusions, and the regulatory provisions of this decision, each of the exceptions received was carefully and fully considered in conjunction with the record evidence. To the extent that the findings and conclusions and the regulatory provisions of this decision are at variance with any of the exceptions, such exceptions are hereby overruled for the reasons previously stated in this decision.

Marketing Agreement and Order

Annexed hereto and made a part hereof are two documents, a Marketing Agreement regulating the handling of milk, and an Order amending the order regulating the handling of milk in the Southern Illinois marketing area, which have been decided upon as the detailed and appropriate means of effectuating the foregoing conclusions.

It is hereby ordered that this entire decision and the two documents annexed hereto be published in the **Federal Register.**

Determination of Producer Approval and Representative Period

November 1987 is hereby determined to be the representative period for the purpose of ascertaining whether the issuance of the order, as amended and as hereby proposed to be amended, regulating the handling of milk in the Southern Illinois marketing area is approved or favored by producers, as defined under the terms of the order (as amended and as hereby proposed to be amended), who during such representative period were engaged in the production of milk for sale within the aforesaid marketing area.

List of Subjects in 7 CFR Part 1032

Milk marketing orders, Milk, Dairy products.

Signed at Washington, DC, on February 18, 1988.

Kenneth A. Gilles,

Assistant Secretary for Marketing and Inspection Services.

Order Amending the Order Regulating the Handling of Milk in the Southern Illinois Marketing Area

(This order shall not become effective unless and until the requirements of § 900.14 of the rules of practice and procedure governing proceedings to formulate marketing agreements and marketing orders have been met.)

Findings and Determinations

The findings and determinations hereinafter set forth supplement those that were made when the order was first issued and when it was amended. The previous findings and determinations are hereby ratified and confirmed, except where they may conflict with those set forth herein.

(a) Findings. A public hearing was held upon certain proposed amendments to the tentative marketing agreement and to the order regulating the handling of milk in the Southern Illinois marketing area. The hearing was held pursuant to the provisions of the Agricultural Marketing Agreement Act of 1937, as amended (7 U.S.C. 601–674), and the applicable rules of practice and procedure (7 CFR Part 900).

Upon the basis of the evidence introduced at such hearing and the record thereof, it is found that:

(1) The said order as hereby amended, and all of the terms and conditions thereof, will tend to effectuate the declared policy of the Act;

(2) The parity prices of milk, as determined pursuant to section 2 of the Act, are not reasonable in view of the price of feeds, available supplies of feeds, and other economic conditions which affect market supply and demand for milk in the said marketing area; and the minimum prices specified in the order as hereby amended are such prices as will reflect the aforesaid factors, insure a sufficient quantity of pure and wholesome milk, and be in the public interest;

(3) The said order as hereby amended regulates the handling of milk in the same manner as, and is applicable only to persons in the respective classes of industrial or commercial activity specified in, a marketing agreement upon which a hearing has been held; and

(4) All milk and milk products handled by handlers, as defined in the order as hereby amended, are in the current of interstate commerce or directly burden, obstruct, or affect interstate commerce in milk or its products.

Order Relative to Handling

It is therefore ordered that on and after the effective date hereof, the handling of milk in the Southern Illinois marketing area shall be in conformity to and in compliance with the terms and conditions of the order, as amended, and as hereby amended, as follows:

The provisions of the proposed marketing agreement and order amending the order contained in the recommended decision issued by the Administrator on November 9, 1987 and published in the **Federal Register** on November 13, 1987 (52 FR 43590), shall be and are the terms and provisions of this order, amending the order, and are set forth in full herein.

PART 1032—MILK IN THE SOUTHERN ILLINOIS MARKETING AREA

1. The authority citation for 7 CFR Part 1032 continues to read as follows:

Authority: Secs. 1–19, 48 Stat. 31, as amended; 7 U.S.C. 601–674.

2. Section 1032.2 is revised to read as follows:

§ 1032.2 Southern Illinois-Eastern Missouri marketing area.

"Southern Illinois-Eastern Missouri marketing area", hereinafter called the "marketing area", means all territory within the boundaries of the following counties and the city of St. Louis, including all municipal corporations therein and all institutions owned or operated by the Federal, State, county or municipal governments located wholly or partially within such territory:

Base Zone—In the State of Illinois

Bond	Jasper
Calhoun	Jefferson
Christian	Jersey
Clark	Lawrence
Clay	Macoupin
Clinton	Madison (Alton Township only)
Coles	Marion
Crawford	Montgomery
Cumberland	Richland
Edwards	Shelby
Effingham	Wabash
Fayette	Washington
Greene	Wayne

Northern Zone—In the State of Illinois

Champaign	Menard
DeWitt	Morgan
Douglas	Moultrie
Edgar	Piatt
Logan	Sangamon
Macon	Vermilion
McLean	

Southern Zone—In the State of Illinois

Franklin	Randolph
Hamilton	Saline
Jackson	St. Clair
Madison (except Alton Township)	White
Monore	Williamson
Perry	

In the State of Missouri

Bollinger	St. Charles
Cape Girardeau	St. Francois
Crawford	St. Louis (City)
Franklin	St. Louis
Jefferson	Ste. Genevieve
Perry	Warren
	Washington

3. Section 1032.3 is revised to read as follows:

§ 1032.3 Route disposition.

"Route disposition" means any delivery to a retail or wholesale outlet (except to a plant) either direct or through any distribution facility of a fluid milk product classified as Class I milk.

§ 1032.6 Supply plant. [Amended]

4. Section 1032.6 is amended by changing the word "moved" to "transferred".

5. In § 1032.7, the introductory text and paragraphs (a), (b) and (d)(2) are revised to read as follows:

§ 1032.7 Pool plant.

Except as provided in paragraph (d) of this section, "pool plant" means:

(a) A distributing plant from which:

(1) Route disposition, except filled milk, in the marketing area during the month is at least the lesser of a daily average of 7,000 pounds or 10 percent of the total quantity of bulk fluid milk products physically received at such plant and diverted therefrom pursuant to § 1032.13; and

(2) Total route disposition, except filled milk, is at least 50 percent of the total quantity of bulk fluid milk products physically received at such plant and diverted therefrom pursuant to § 1032.13 during the months of August through February and 40 percent during the other months.

(b) A supply plant from which during December at least 40 percent, and at least 50 percent in all other months, of the total receipts of milk from dairy farmers (including producer milk diverted from such plant pursuant to § 1032.13 but excluding milk diverted to such plant) and handlers described in § 1032.9(c) is transferred to and physically received at plants described in paragraph (a) of this section, except that the minimum qualifying percentage shall be 25 percent for a plant(s) operated by a cooperative association that delivered producer milk during each

of the immediately preceding months of September through August and at least 75 percent of the total producer milk marketed in that 12-month period by such cooperative association was delivered to and physically received at plants described in paragraph (a) of this section.

* * * * *

(d) * * *

(2) A distributing plant qualified pursuant to paragraph (a) of this section which also meets the pooling requirements of another Federal order and from which during the month there is greater quantity of route disposition, except filled milk, in the marketing area covered by the other order than in this marketing area: *Provided,* That such a distributing plant which was a pool plant under this order in the immediately preceding month shall continue to be subject to all of the provisions of this part until the third consecutive month in which a greater proportion of such plant's total route disposition is made in such other marketing area, unless the other order requires regulation of the plant without regard to its maintaining pool status under this order on the basis of the proviso of this paragraph;

* * * * *

6. Section 1032.13 is revised to read as follows:

§ 1032.13 Producer Milk.

"Producer milk" means the skim milk and butterfat contained in milk of a producer that is:

(a) Received at a pool plant directly from a producer or a handler described in § 1032.9(c);

(b) Received by a handler described in § 1032.9(c) is excess of the quantity delivered to a pool plant(s);

(c) Diverted from a pool plant for the account of the handler operating such plant to another pool plant;

(d) Diverted from a pool plant to a nonpool plant (other than a producer-handler plant) for the account of the handler described in § 1032.9 (a) or (b), subject to the following conditions:

(1) Milk of a dairy farmer shall not be eligible for diversion during the months of August through April unless such producer's milk is delivered to and physically received at a pool plant at least once during each such month;

(2) The total amount of milk diverted by a cooperative association during each of the months of September through November and January through April, shall not exceed 35 percent of the producer milk that such cooperative caused to be delivered to and diverted from pool plants in each such month and 45 percent of such producer milk deliveries and diversions by the cooperative in each of the months of August and December;

(3) The operator of a pool plant (other than a cooperative association) may divert any milk that is not under the control of a cooperative association that is diverting milk during the month pursuant to paragraph (d)(2) of this section. The total amount of milk diverted during each of the months of September through November and January through April shall not exceed 35 percent of such plant operator's producer milk received at any diverted from such pool plant and 45 percent of such plant operator's producer milk receipts and diversions in each of the months of August and December;

(4) The quantity of milk diverted in excess of the applicable percentage limit prescribed in paragraph (d)(2) or (3) of this section shall not be producer milk. In such event, the handler diverting such milk may designate the dairy farmer deliveries that shall not be producer milk. If the handler fails to make such designation, milk diverted on the last day of the month, then the next-to-last day of the month, and so on, shall be excluded until such exclusions cover the excess quantity;

(5) The quantity of milk diverted for the account of a cooperative association from a pool plant of another handler that would cause the pool plant to be a nonpool plant shall not be producer milk. In such event, the diverting handler may designate the dairy farmer deliveries that shall not be producer milk. If the handler fails to make such designation, milk diverted on the last day of the month, then the next-to-last day of the month, and so on, shall be excluded until such exclusions cover the excess quantity; and

(e) Milk diverted pursuant to paragraph (c) or (d) of this section shall be priced at the location of the plant to which diverted.

§ 1032.19 [Removed and Reserved]

7. Section 1032.19, Reload Point, is removed and reserved for future assignment.

§ 1032.51 [Amended]

8. Section 1032.51, Basic formula price, is amended by removing the last sentence.

9. In § 1032.52, the introductory text of paragraph (a) is amended by removing the word "pool" and paragraph (a)(2) is revised to read as follows:

§ 1032.52 Plant location adjustments for handlers.

(a) * * *

(2) For a plant located outside the marketing area but in any of the following territory the adjustment shall be as follows:

(i) *Minus 17 cents.* In counties of Adams, Brown, Cass, Pike, Schuyler and Scott in the State of Illinois or in the counties of Fountain, Parke, Vermillion and Warren in the State of Indiana.

(ii) *No adjustment.* In the State of Missouri south and east of Interstate Highway 44.

§ 1032.75 [Amended]

10. In § 1032.75 Plant location adjustments for producers and on nonpool milk, paragraph (a) is amended by removing the word "pool" in the two places it appears.

Marketing Agreement Regulating the Handling of Milk in the Southern Illinois-Eastern Missouri Marketing Area

The parties hereto, in order to effectuate the declared policy of the Act, and in accordance with the rules of practice and procedure effective thereunder (7 CFR Part 900), desire to enter into this marketing agreement and do hereby agree that the provisions referred to in paragraph I hereof as augmented by the provisions specified in paragraph II hereof, shall be and are the provisions of this marketing agreement as if set out in full herein.

I. The findings and determinations, order relative to handling, and the provisions of §§ 1032.1 to 1032.86, all inclusive, of the order regulating the handling of milk in the Southern Illinois-Eastern Missouri marketing area (7 CFR PART 1032) which is annexed hereto; and

II. The following provisions:

§ 1032.87 Record of milk handled and authorization to correct typographical errors.

(a) Record of milk handled. The undersigned certifies that he handled during the month of November 1987, hundredweight of milk covered by this marketing agreement

(b) Authorization to correct typographical errors. The undersigned hereby authorizes the Director, or Acting Director, Dairy Division, Agricultural Marketing Service, to correct any typographical errors which may have been made in this marketing agreement.

§ 1032.88 Effective date. This marketing agreement shall become effective upon the execution of a counterpart hereof by the Secretary in accordance with Section 900.14(a) of the aforesaid rules of practice and procedure.

In Witness Whereof, The contracting handlers, acting under the provisions of the Act, for the purposes and subject to the limitations herein contained and not otherwise, have hereunto set their respective hands and seals.

_____

(Signature)

By _____

(Name) (Title)

_____

(Address)

(Seal)
Attest
Date

[FR Doc. 88-3879 Filed 2-25-88; 8:45 am]

BILLING CODE 3410-02-M

DEPARTMENT OF TRANSPORTATION

Federal Aviation Administration

14 CFR Part 39

[Docket No. 88-NM-04-AD]

Airworthiness Directives; British Aerospace Model BAC 1-11 Series Airplanes

AGENCY: Federal Aviation Administration (FAA), DOT.

ACTION: Notice of proposed rulemaking (NPRM).

SUMMARY: This notice proposes to revise an existing airworthiness directive (AD), applicable to British Aerospace Model BAC 1-11 series airplanes, which currently requires inspection and repair or replacement of parts or material pertaining to the airframe intake plenum to the auxiliary power unit (APU); placement of a placard on the control panel; and changes in operational procedures in the airplane flight manual (AFM). This action would require a revision of the AFM procedures, and provide an alternate service bulletin, alternate part numbers, and alternate material for the accomplishment of the requirements of the AD. This action is prompted by recent system improvements necessary to prevent heat damage and fire in the APU installation.

DATE: Comments must be received no later than April 21, 1988.

ADDRESSES: Send comments on the proposal in duplicate to Federal Aviation Administration, Northwest Mountain Region, Office of the Regional Counsel (Attn: ANM-103), Attention: Airworthiness Rules Docket No. 88-NM-04-AD, 17900 Pacific Highway South, C-68966, Seattle, Washington 98168. The applicable service information may be obtained from British Aerospace, Inc., Librarian for Service Bulletins, P.O. Box 17414, Dulles International Airport, Washington, DC 20041. This information may be examined at the FAA, Northwest Mountain Region, 17900 Pacific Highway South, Seattle, Washington, or Seattle Aircraft Certification Office, 9010 East Marginal Way South, Seattle, Washington.

FOR FURTHER INFORMATION CONTACT: Robert Huhn, Standardization Branch, ANM-113; telephone (206) 431-1967. Mailing address: FAA, Northwest Mountain Region, 17900 Pacific Highway South, C-68966, Seattle, Washington 98168.

SUPPLEMENTARY INFORMATION:

Comments Invited

Interested persons are invited to participate in the making of the proposed rule by submitting such written data, views, or arguments as they may desire. Communications should identify the regulatory docket number and be submitted in duplicate to the address specified above. All communications received on or before the closing date for comments specified above will be considered by the Administrator before taking action on the proposed rule. The proposals contained in this Notice may be changed in light of the comments received. All comments submitted will be available, both before and after the closing date for comments, in the Rules Docket for examination by interested persons. A report summarizing each FAA/public contact concerned with the substance of this proposal will be filed in the Rules Docket.

Availability of NPRM

Any person may obtain a copy of this Notice of Proposed Rulemaking (NPRM) by submitting a request to the FAA, Northwest Mountain Region, Office of the Regional Counsel (Attn: ANM-103), Attention: Airworthiness Rules Docket No. 88-NM-04-AD, 17900 Pacific Highway South, C-68966, Seattle, Washington 98168.

Discussion

On May 21, 1970, FAA issued AD 68-01-01, Amendment 39-998 (35 FR 104; May 28, 1970), to require inspection, repair, and replacement of certain parts and material, as necessary, on British Aerospace Model BAC 1-11 series airplanes, to prevent heat damage or fire in the airframe plenum of the APW installation. Additionally, that AD requires certain changes in operational procedures, as well as revision to the AFM.

Since issuance of AD 68-01-01, the United Kingdom Civil Airworthiness Authority (CAA) and British Aerospace have notified FAA that, due to various amendments to the airplane flight manual (AFM) over the years, the AFM procedures required by AD 68-01-01 are presently obsolete and inappropriate for safe operation of the APU; a revision to the AFM procedures is therefore, necessary.

Further, there are now available new part numbers and materials (non-return valve Part Numbers 1398B000/1398B999 and 3031B000), and an additional service bulletin (BAC 1-11 Service Bulletin 36-PM4912), that may be used as an alternate method for accomplishing certain requirements of the existing AD.

This airplane model is manufactured in the United Kingdom and type certified in the United States under the provisions of § 21.29 of the Federal Aviation Regulations and the applicable bilateral airworthiness agreement.

Since this condition is likely to exist or develop on other airplanes of this same type design registered in the United States, an AD is proposed which would require revision of the AFM procedures, and provide alternate part numbers, alternate material, and an alternate service bulletin for accomplishment of the requirements of the existing AD.

It is estimated that 70 airplanes of U.S. registry would be affected by this AD, that it would take approximately 2 manhours per airplane to accomplish the required actions, and that the average labor cost would be $40 per manhour. Based on these figures, the total cost impact of the AD on U.S. operators is estimated to be $5,600.

For these reasons, the FAA has determined that this document (1) involves a proposed regulation which is not major under Executive Order 12291 and (2) is not a significant rule pursuant to the Department of Transportation Regulatory Policies and Procedures (44 FR 11034; February 26, 1979); and it is further certified under the criteria of the Regulatory Flexibility Act that this proposed rule, if promulgated, will not have a significant economic impact, positive or negative, on a substantial number of small entities because of the minimal cost of compliance per airplane ($80). A copy of a draft regulatory evaluation prepared for this action is contained in the regulatory docket.

List of Subjects in 14 CFR Part 39

Aviation safety, Aircraft.

The Proposed Amendment

Accordingly, pursuant to the authority delegated to me by the Administrator, the Federal Aviation Administration proposes to amend § 39.13 of Part 39 of the Federal Aviation Regulations (14 CFR 39.13) as follows:

PART 39—[AMENDED]

1. The authority citation for Part 39 continues to read as follows:

Authority: 49 U.S.C. 1354(a), 1421 and 1423; 49 U.S.C. 106(g) (Revised Pub. L. 97-449, January 12, 1983); and 14 CFR 11.89.

§ 39.13 [Amended]

2. By revising AD 68-01-01, Amendment 39-998 (35 FR 104; May 28, 1970), as follows:

British Aerospace: Applies to Model BAC 1-11 200 and 400 series airplanes, certificated in any category. Compliance required within the next 50 hours time in service after the effective date of this AD, unless already accomplished.

To prevent heat damage or fire in the airframe plenum of the auxiliary power unit (APU) installation, accomplish the following:

A. For use of the APU on the ground, accomplish the following:

1. Visually check the fiberglass surround of the APU intake of the fuselage immediately behind the intake grill for evidence of heat discoloration. If the evidene of heat is present, remove the non-return valve located in the APU air delivery duct, Part No. 525180, and replace with a servicable Part No. 525180 or modified Part No. 1398B000, 1398B000/1398B999, or 303180B000.

2. Install a placard adjacent to the APU control panel in clear view of the pilot or amend the airplane flight manual limitations Section 2, to read as follows: "Close APU air delivery valve when starting an engine from an external supply or by cross-feeding air from an operating engine. Close APU air delivery valve and shut down APU for takeoff and flight operations." When all actions required by paragraph B., below, are accomplished, the placard may be removed or the foregoing amendment to the airplane flight manual should be deleted, as appropriate.

3. Remove all APU plenum chamber sound proofing.

B. For operational use of the APU in flight, accomplish the following:

1. Remove non-return valve, Part No. 525180, located in the APU air delivery duct and replace with non-return valve, Part No. 1398B000, 1398B000/1398B999, or 3031B000, in accordance with British Aerospace BAC 1-11 Service Bulletins 36-PM3254 or 36-PM4912.

2. Perform the following modifications in accordance with British Aerospace BAC 1-11 Service Bulletin 53-PM3148:

a. Install additional fire-proof, stainless steel skin over existing light alloy outer skin on top of the fuselage, between Stations 936 and 958 to isolate the APU plenum chamber from the fin structure.

b. Replace the light alloy wall separating the APU plenum chamber from the hydraulic compensator unit compartment by installing a stainless steel wall enlarging the hydraulic compensator box and replacing light alloy structural parts with stainless steel.

c. Install revised spring loaded door in the bulkhead at Station 936 and modify the hydraulic compensator drain box and drain outlet.

3. Install sealing plates around the control guard, located above the rudder power control units, and over the hole in the fin rear spar, to provide restriction to the airflow into the fin, in accordance with British Aerospace BAC 1-11 Service Bulletin 55-PM3177.

4. Install an additional bi-metallic temperature sensor in parallel with the existing mercury sensor in circuitry for controlling the electrically actuated primary temperature valve locad in the low pressure bleed flow duct to the heat exchanger, in accordance with British Aerospace BAC 1-11 Service Bulletin 21-PM2780A, or install Graviner bi-metallic sensor in accordance with BAC 1-11 Modification 21-PM-2545 Part A.

5. Perform a magnetic check to identify "felt metal" jet pipe installed on the APU manufactured from type "430" stainless steel post PM 209 in accordance with British Aerospace BAC 1-11 Service Bulletin 49-A-PM3313. Thoroughly inspect the jet pipes thus identified for cracks adjacent to the weld. Replace cracked pipes with servicable pipes manufactured from 430 or 347 material. Jet pipes identified a manufactured from "430" stainless steel and found by inspection to be in a servicable condition, may continue in operation provided that the inspection is performed thereafter at intervals not to exceed 160 hours' time in service. Type "430" jet pipes must be removed from service upon accumulating 3,000 hours time in service.

6. Add new paragraphs at the end of Section 2, "APU Supply and Air Conditioning," Page 15, of the BAC 1-11 airplane flight manual to read as follows:

"The following limitations on the use of the APU air supply and integrated air system shall be observed to limit the time of exposure of the common duct to the simultaneous delivery of air from the engines and the APU:

a. Whenever an engine is being started by air from an external supply or by cross-feeding air from the other engine, the APU air delivery valve shall be closed.

b. When one or both engines are running and the APU is supply air for both air conditioning systems, the master valve switch for each system must be set to APU.

If the APU is only supplying air for one system, the master valve switch for that system must be set to APU and for the system not in use, the master valve switch must be set to CLOSE and isolation valve switch must be set to CLOSE.

c. After take-off and when changing the source of supply from the APU to the engines, the APU air delivery valve switch must be set to CLOSE immediately on completion of the change-over drill. Refer to Section 4."

C. An alternate means of compliance or adjustment of the compliance time, which provides an acceptable level of safety and which has the concurrence of an FAA Principal Maintenance Inspector, may be used when approved by the Manager, Standardization Branch, ANM-113, FAA, Northwest Mountain Region.

D. Special flight permits may be issued in accordance with FAR 21.197 and 21.199 to operate airplanes to a base for the accomplishment of inspections and/or modifications required by this AD.

All persons affected by this directive who have not already received the appropriate service documents from the manufacturer may obtain copies upon request to British Aerospace, Inc., Librarian for Service Bulletin, P.O. Box 17414, Dulles International Airport, Washington, DC 20041. These documents may be examined at the FAA, Northwest Mountain Region, 17900 Pacific Highway South, Seattle, Washington, or Seattle Aircraft Certification Office, 9010 East Marginal Way South, Seattle, Washington.

Issued in Seattle, Washington, on February 12, 1988.

Frederick M. Isaac,

Acting Director, Northwest Mountain Region.

[FR Doc. 88-4082 Filed 2-25-88; 8:45 am]

BILLING CODE 4810-13-M

DEPARTMENT OF THE INTERIOR

Office of Surface Mining Reclamation and Enforcement

30 CFR Part 917

Kentucky; Proposed Regulatory Program Amendment; Remining

AGENCY: Office of Surface Mining Reclamation and Enforcement (OSMRE), Interior.

ACTION: Reopening of public comment period.

SUMMARY: OSMRE is reopening the public comment period on the substantive adequacy of certain program amendments submitted by the Commonwealth of Kentucky to modify the Kentucky permanent regulatory program [hereinafter referred to as the Kentucky program] under the Surface Mining Control and Reclamation Act of 1977 (SMCRA). The amendments submitted consist of new and revised regulations designed to implement Kentucky Revised Statute (KRS) 350.075, the remining statutes enacted by the 1986 Kentucky General Assembly as Senate Bill No. 374. Due to the numerous comments received on the amendments, a meeting between OSMRE and the Department for Surface Mining Reclamation and Enforcement (DSMRE) was held on January 14, 1988, to discuss these comments and amendments.

This notice sets forth the times and location for public inspection of the Kentucky program, the proposed amendments, and the meeting notes on the proposed regulations. This notice also sets forth the comment period during which interested persons may submit written comments on the proposed amendments or other material in the Administrative Record.

DATES: Written comments relating to Kentucky's proposed modification of its program not received on or before 4:00 p.m. on March 14, 1988, will not necessarily be considered in the decision process.

ADDRESSES: Written comments should be mailed or hand-delivered to: W. Hord Tipton, Director, Lexington Field Office, Office of Surface Mining Reclamation and Enforcement, 340 Legion Drive, Suite 28, Lexington, Kentucky 40504.

Copies of the Kentucky program, the amendments, meeting notes, and all written comments received in response to this notice will be available for public review at the following locations, during normal business hours, Monday through Friday, excluding holidays:

Office of Surface Mining Reclamation and Enforcement, Lexington Field Office, 340 Lexington Drive, Suite 28, Lexington, Kentucky 40504, Telephone: (606) 233-3727

Office of Surface Mining Reclamation and Enforcement, Administrative Record Office, Room 5131, 1100 "L" Street, NW., Washington, DC 20240, Telephone: (202) 343-5492

Office of Surface Mining Reclamation and Enforcement, Eastern Field Operations, Ten Parkway Center, Pittsburgh, Pennsylvania 15220, Telephone: (412) 937-2828

Department for Surface Mining Reclamation and Enforcement, No. 2 Hudson Hollow Complex, Frankfort, Kentucky 40601, Telephone: (502) 564-6940

Each requester may receive, free of charge, one single copy of the proposed amendments by contacting the OSMRE Lexington Field Office.

FOR FURTHER INFORMATION CONTACT: Mr. W. Hord Tipton, Director, Lexington Field Office, Office of Surface Mining Reclamation and Enforcement, 340 Legion Drive, Suite 28, Lexington, Kentucky 40504: Telephone: (606) 233-7327.

SUPPLEMENTARY INFORMATION:

I. Background on the Kentucky Program

On April 13, 1982, the Secretary approved the Kentucky program. The approval was effective upon publication of the notice of conditional approval in the May 18, 1982 **Federal Register** (47 FR 21404-21435). Information pertinent to the general background on the Kentucky State Program, including the Secretary's findings, disposition of comments and a detailed explanation of the conditions of approval of the Kentucky program can be found in the May 18, 1982 notice. Subsequent actions concerning the conditions of approval and program amendments are identified at 30 CFR 917.11, 917.15, 917.16, and 917.17.

II. Discussion of the Proposed Amendments

On August 4, 1987, (Administrative Record No. KY-751), Kentucky resubmitted to OSMRE, pursuant to 30 CFR 732.17, proposed amendments to the Kentucky regulatory program. These amendments were intended to implement Kentucky Senate Bill No. 374 that was approved by the Director, OSMRE, on July 13, 1986 (51 FR 26002). The proposed rules are intended to address the requirement at 30 CFR 917.16(c)(2) which states that Kentucky is required, prior to implementation of Senate Bill No. 374, to submit to the Director proposed regulations to implement the bill and to receive the Director's approval of the regulations. On July 29, 1986, Kentucky submitted regulations to implement Senate Bill No. 374 (Administrative Record No. KY-717) but subsequently withdrew them on October 14, 1986. On November 26, 1986, OSMRE announced that the regulations to implement Senate Bill No. 374 were withdrawn by Kentucky (51 FR 42267).

On September 16, 1987, **Federal Register** (52 FR 34932-34933), OSMRE announced receipt of resubmitted proposed amendments and the procedures for a public comment period and a public hearing (Administrative Record No. 762). Numerous comments were received on the substance of the proposed amendments prior to the close of the public comment on October 16, 1987. No public hearing was requested and none was held.

On January 14, 1988, a meeting was held between OSMRE and the Kentucky Department for Surface Mining Reclamation and Enforcement (DSMRE) to discuss the comments received and to further clarify the proposed amendments.

The proposed amendments modify sections of the Kentucky Administrative Regulations (KAR) at 405 KAR 8:060, 405 KAR 20:090, 405 KAR 8:010, 405 KAR 12:020, and 405 KAR 16:020, and are summarized briefly below.

1. Kentucky proposes to add a new regulation 405 KAR 8:060, to set forth permit application requirements for special reclamation of abandoned mine lands permits. The rule includes sections on applicability; definitions; general provisions; legal, financial, and compliance information; environmental resources information; maps, drawings and cross-sections; mining and reclamation plan; and performance bond. A special reclamation of abandoned mine lands permit is for remining previously mined lands and secondary coal recovery operations.

2. Kentucky proposes to add a new regulation, 405 KAR 20:090, to establish performance standards to apply to operations under a special reclamation of abandoned mine lands permit. The applicability section of the rule proposes that requirements of 405 KAR Chapters 16, 18, and 20 (the approved program performance standards for surface mines, underground mines and special categories) would not apply to such lands except as specifically stated in 405 KAR 20:090. This rule establishes separate hydrologic protection requirements, requirements for backfilling and grading, and revegetation standards for special reclamation of abandoned mine lands permits.

3. Kentucky proposes to modify 405 KAR 8:010, Section 4, to: (1) Require the Division of Abandoned Lands to make a written determination whether the proposed area meets the requirements for a special reclamation of abandoned mine lands permit, (2) assure that preliminary applications will contains sufficient information to qualify the lands, and, (3) Kentucky modified 405 KAR 8:010, Section 5(1)(c) includes a new reference to 405 KAR 8:060 special reclamation of abandoned mine lands permit.

4. Kentucky proposes to add 405 KAR 12:020, Section 3(4)(d), to require that enforcement of orders for cessation and immediate compliance issued on a special reclamation of abandoned mine lands permit effect only that permit

5. Kentucky proposes to modify 405 KAR 16:020, Section 2(7) to permit the Cabinet to waive the time criteria for the removal of refuse material during recovery operations for special reclamation of abandoned mine lands permits.

Due to numerous comments on the submitted amendment, a meeting between OSMRE and DSMRE was held on January 14, 1988, to discuss these comments and the submitted amendments. The comments and meeting minutes are available in the Administrative Record. The Director is, therefore, reopening the public comment period. Comments should specifically address the issues of whether the proposed amendments are in accordance with SMCRA and whether they are as effective as SMCRA's implementing regulations.

III. Public Comment Procedures

In accordance with the provisions of 30 CFR 732.17, OSMRE is now seeking comment on whether the amendments proposed by Kentucky satisfy the

requirements of 30 CFR 732.15 for the approval of State program amendments. If the amendments are deemed adequate, they will become part of the Kentucky program.

Written Comments

Written comments should be specific, pertain only to the issues proposed in this rulemaking, and include explanations in support of the commenter's recommendations. Comments received after the time indicated under "**DATES**" or at locations other than the Lexington, Kentucky Field Office will not necessarily be considered in the final rulemaking, or included in the Administrative Record.

IV. Procedural Determinations

1. *Compliance with the National Environmental Policy Acts.* The Secretary has determined that, pursuant to section 702(d) of SMCRA, 30 U.S.C. 1292(d), no environmental impact statement need be prepared on this rulemaking.

2. *Executive Order No. 12291.* On August 28, 1982, the Office of Management and Budget (OMB) granted OSMRE an exemption from sections 3, 4, 7, and 8 of Executive Order 12291 for actions directly related to approval or conditional approval of State regulatory programs. Therefore, this action is exempt from preparation of a Regulatory Impact Analysis and regulatory review by OMB.

3. *Compliance with the Regulatory Flexibility Act.* The Department of the Interior has determined that this rule will not have a significant economic effect on a substantial number of small entities under the Regulatory Flexibility Act (5 U.S.C. 601 *et seq.*). This rule will not impose any new requirements; rather, it will ensure that existing requirements established by SMCRA and the Federal rules will be met by the State.

4. *Paperwork Reduction Act.* This rule does not contain information collection requirements which require approval by the Office of Management and Budget under 44 U.S.C. 3507.

List of Subjects in 30 CFR Part 917

Coal mining, Intergovernmental relations, Surface mining, Underground mining.

Carl C. Close,

Assistant Director, Eastern Field Operations.

Date: February 16, 1988.

[FR Doc. 88-4117 Filed 2-25-88; 8:45 am]

BILLING CODE 4310-05-M

30 CFR Part 925

Public Comment Period and Opportunity for Public Hearing on an Amendment to the Missouri Permanent Regulatory Program

AGENCY: Office of Surface Mining Reclamation and Enforcement (OSMRE), Interior.

ACTION: Proposed rule.

SUMMARY: OSMRE is announcing procedures for a public comment period and for a public hearing on the substantive adequacy of amendments submitted by the State of Missouri to amend its permanent regulatory program (hereinafter referred to as the Missouri program) under the Surface Mining Control and Reclamation Act of 1977 (SMCRA).

The proposed regulation changes are in the areas of prime farmland, coal exploration, small operator's assistance program (SOAP), 2-acre exemption, inspection and enforcement, experimental practices, definitions, protection of cultural or historic places, revegetation success, alternative bonding system, permit fees, use of explosives, general fund prohibition, and State law stringency. The State is proposing these changes to bring its law into compliance with the Federal regulations and as an effort to improve its own program.

This notice sets forth the times and locations that the Missouri program and proposed amendments to that program are avilable for public inspection, the comment period during which interested persons may submit written comments on the proposed amendments and procedures that will be followed regarding the public hearing, if one is requested.

DATES: Written comments relating to Missouri's proposed modification of its program not recieved on or before 4:00 p.m. c.s.t. on March 28, 1988, will not necessarily be considered in the decision process. A public hearing on the adequacy of the amendments will be held upon request on March 22, 1988. Any person interested in making an oral or written presentation at the public hearing should contact Mr. William J. Kovacic at the Kansas City Field Office by the close of business on or before March 14, 1988. If no one has contacted Mr. Kovacic to express an interest in participating in the hearing by that date, the hearing will not be held. If only one person has so contacted Mr. Kovacic, a public meeting may be held in place of the hearing. If possible, a notice of the meeting will be posted in advance at the locations listed under "ADDRESSES."

ADDRESSES: Written comments should be mailed or hand delivered to Mr. William J. Kovacic, Director, Kansas City Field Office, Office of Surface Mining Reclamation and Enforcement, 1103 Grand Avenue, Room 502, Kansas City, Missouri 64106. Copies of the Missouri program, the proposed modifications to the program, and all written comments received in response to this notice will be available for public review at the Kansas City Field Office, OSMRE Headquarters Office, and the office of the State regulatory authority listed below, Monday through Friday, 9:00 a.m. to 4:00 p.m. c.s.t., excluding holidays. Each requester may receive, free of charge, one copy of the proposed amendments by contacting OSMRE's Kansas City Field Office.

Kansas City Field Office, Office of Surface Mining Reclamation and Enforcement, 1103 Grand Avenue, Room 502, Kansas City, Missouri 64106; Telephone: (816) 374-5527.

Office of Surface Mining Reclamation and Enforcement, 1100 L Street NW., Room 5131, Washington, DC 20240; Telephone: (202) 343-5492.

Missouri Department of Natural Resources, Land Reclamation Program, 205 Jefferson Street, P.O. Box 176, Jefferson City, Missouri 65102; Telephone (314) 751-4041.

FOR FURTHER INFORMATION CONTACT: Mr. William J. Kovacic, Director, Kansas City Field Office, Office of Surface Mining Reclamation and Enforcement, 1103 Grand Avenue, Room 502, Kansas City, Missouri 64106; Telephone: (816) 374-5527.

SUPPLEMENTARY INFORMATION:

I. Background

The Secretary of the Interior approved the Missouri program on November 21, 1980 (45 FR 77017). Information pertinent to the general backgound and revisions to the permanent program submission, as well as the Secretary's findings, the disposition of comments, and a detailed explanation of the conditions of approval of the Missouri program can be found in the November 21, 1980 **Federal Register** (45 FR 77017). Subsequent actions concerning proposed amendments and the conditions of approval are codified at 30 CFR 925.10, 925.15, 925.16 and 925.20.

II. Submission of Amendments

On December 14, 1987 (Administrative Record No. MO-353) and on December 18, 1987 (Administrative Record No. MO-354), the State of Missouri submitted to OSMRE amendments to its approved regulatory program. The

proposed changes are summarized briefly.

Prime Farmland

1. Missouri proposes to amend prime farmland regulations at 10 CSR 40-4.030, 10 CSR 40-6.040(16), 10 CSR 40-6.060(4)(B), (C), and (D) and 10 CSR 40-6.110(16) to respond to a regulatory reform letter (Administrative Record No. MO-295) issued under 30 CFR Part 732 by OSMRE on June 11, 1986. The amendment includes a requirement that: All permit applications include the results of a reconnaissance inspection of the proposed permit area; the U.S. Soil Conservation Service be consulted to determine the nature and extent of the required reconnaissance inspection; other soil materials can only be used in place of A horizon materials if they will create a soil with greater productive capacity; restoration of soil productivity shall be measured by a representative sample using a statistically valid sampling technique at a 90 percent of greater statistical confidence level; actual crop yields be utilized to measure the success of restoration of soil productivity; reference crops used in the comparison shall be selected from crops most commonly produced on the surrounding prime farmland; when row crops are used, the row crop requiring the greatest rooting depth shall be chosen as one of the reference crops; specific sources are to be used in determining reference crop yields and for adjustments to the average reference crop yield.

Coal Exploration

2. Missouri proposes to amend coal exploration regulations at 10 CSR 40-4.010 and 10 CSR 40-6.020 in response to a letter on regulatory reform (Administrative Record No. MO-295) under 30 CFR Part 732 issued by OSMRE dated June 11, 1986. This amendment contains language that requires: That exploration applications include a statement of why extraction of more than 250 tons of coal is necessary; public notice of an application in a newspaper as well as notification of the permit decision; that disturbances be prohibited during coal exploration of habitats of unique or unusually high value for fish, wildlife or other related environmental values; quick, effective vegetative cover for all areas disturbed by coal exploration.

3. Missouri proposes to further amend its coal exploration rule at 40 CSR 6.020 to address specific concerns outlined in a letter (Administrative Record No. MO-364) under 30 CFR Part 732 form OSMRE dated July 9, 1987. The amendment requires that applications for coal exploration include cultural or historic resources listed or known to be eligible for listing on the National Register of Historic Places and all known archaeological resources located within the proposed exploration area.

4. Missouri proposes to introduce a requirement at 40 CSR 6.020 that requires reclamation bonds for all coal exploration permits, and the conditions for release of these bonds. The proposed rule is a partial response to a letter from OSMRE (Administrative Record No. MO-351) under 30 CFR Part 732 dated January 30, 1986.

Small Operators Assistance Program (SOAP)

5. The existing SOAP regulations at 10 CSR 40-8.050 are rescinded and new rules are proposed that more closely parallel the Federal regulations at 30 CFR Part 795 to address specific concerns regarding SOAP applicants as outlined in a letter on regulatory reform (Administrative Record No. MO-295) under 30 CFR Part 732 from OSMRE dated June 11, 1986.

Applicability and General Requirements

6. In response to a letter issued by OSMRE (Administative Record No. MO-295) under 30 CFR Part 732 on regulatory reform dated June 11, 1986, requiring that a written determination be made by the regulatory authority on whether an operation may be exempt from State law and regulations. Missouri proposes to add paragraph (E), to section 10 CSR 40-8.070 (2) to address this concern.

7. Missouri proposes to remove the State regulations at 10 CSR 40-8.070 (2) (B) as required by Pub. L. 100-34 and the OSMRE notice of suspension that repealed the 2-acre exemption from SMCRA, the Federal regulations, and the counterpart State laws and regulations. This notice of suspension is documented in the June 4, 1987 **Federal Register** (52 FR 21228).

As a result of the above actions, some nonsubstantive renumbering and corrections will occur to the above regulations.

Inspection and Enforcement

8. Missouri proposes to add section 10 CSR 40-8.030(3)(B) in response to a letter issued by OSMRE (Adminstrative Record No. MO-295) under 30 CFR part 732, regulatory reform, dated June 11, 1986, requiring that records, reports and inspection materials be made available for the public inspection for a period of at least 5 yeras after bond release.

Bonding

9. Missouri proposes to add a regulation at 10 CSR 40-7.021(b)(B) in response to a letter issued by OSMRE (Administrative Record No. MO-295) under 30 CFR Part 732, regulatory reform, dated June 11, 1986, requiring that any person with an interest in bond release may obtain access to the permit area for the purpose of gathering information relevant to bond release proceedings.

10. Missouri proposes to amend its statute at Section 444.950 RSMo 1986 by repealing the existing section and replacing it with language that adds the requirement of a bond for no more than $10,000 per acre for the coal preparation area. This proposed amendment is a partial response to a letter from OSMRE (Administrative Record No. MO-351) under 30 CFR Part 732 dated January 30, 1986 concerning the adequacy of the Missouri alternative bonding system.

Experimental Practices

11. Missouri proposes to amend section 10 CSR 40-6.060(1)(E) and (6)(J) and (K) in response to a letter issued by OSMRE (Administrative Record No. MO-295) under 30 CFR Part 732, regulatory reform, dated June 11, 1986, requiring that the application contain data as well as descriptions, maps and plans concerning experimental practices; compliance with notice requirements of 30 CFR 774.13; consultation with the USDA Soil Conservation Service when granting variances relating to prime farmlands; and procedures for revising or modifying experimental practices.

Definitions

12. Missouri proposes to amend its definition of "affected area at 10 CSR 10-8.010(1)(A) to include all areas as defined by 30 CFR 701.5 in response to a letter issued by OSMRE (Administrative Record No. MO-295) under 30 CFR Part 732, regulatory reform, dated June 11, 1986. Missouri also proposes to provide definitions of "coal mine waste," "coal preparation area," "coal preparation plant," "cumulative impact area," "impounding structure," "substantially disturb," "coal processing waste bank," "coal processing waste," "impoundment," and "coal preparation area reclamation."

Several nonsubstantive changes to the Missouri regulations at 10 CSR 40-8.010(1)(A) and to Missouri statute at Section 444.805 RSMo 1986 concerning the numbering of definitions have also occurred as a result of the above changes.

Revegetation Success

13. Missouri proposes to respond to a required program amendment at 30 CFR

925.16(j) in the **Federal Register** 52 FR 534, dated January 7, 1987 by amending its initial program regulations at 10 CSR 40–2.090(6)(B). The changes concerning revegetation requirements add a requirement that the revegetation success standard be met for 2 growing seasons.

Program Funding

14. Missouri proposes to amend its regulations at 10 CSR 40–6.010(6)(A) to increase the fee charged for new surface coal mine permits from $35 per acre to $100 per acre.

15. Missouri proposes to amend its statute at Section 444.730 RSMo 1986 to remove item 4. that prohibits State general revenue from being appropriated or expended for the administration or enforcement of the Missouri program.

Use of Explosives

16. Missouri proposes to amend its program at 10 CSR 40–3.050(1)(E) and 10 CSR 40–3.210(1)(E) to remove the requirement for a blasting buffer zone for both surface and underground mining.

State Law Stringency

17. Missouri proposes to amend its statute at Section 444.800 RSMo 1986 to add language to item 4 that directs the Land Reclamation Commission in its adoption of rules and regulations to insure that such rules and regulations shall be no more stringent than the comparable Federal regulations, unless it can be affirmatively shown that greater stringency is essential to the proper administration and enforcement of this law.

III. Public Comment Procedures

In accordance with the provisions of 30 CFR 732.17, OSMRE is now seeking comment on whether the amendments proposed by Missouri satisfy the requirements of 30 CFR 732.15 for the approval of State program amendments. If the amendments are deemed adequate, they will become part of the Missouri program.

Written Comments

Written comments should be specific, pertain only to the issue proposed in this rulemaking, and include explanations in support of the commenter's recommendations. Comments received after the time indicated under "**DATES**" or at locations other than Kansas City, Missouri, will not necessarily be considered in the final rulemaking or included in the Administrative Record.

Public Hearing

Persons wishing to comment at the public hearing should contact the person listed under "**FOR FURTHER INFORMATION CONTACT**" by 4:00 p.m., c.s.t. March 14, 1988. If no one requests an opportunity to comment at a public hearing, the hearing will not be held.

Filing of a written statement at the time of the hearing is requested as it will greatly assist the transcriber. Submission of written statements in advance of the hearing will allow OSMRE officials to prepare adequate and appropriate questions.

The public hearing will continue on the specified date until all persons scheduled to comment and who wish to do so will be heard following those scheduled. The hearing will end after all persons scheduled to comment and persons present in the audience who wish to comment have been heard.

Public Meeting

If only one person requests an opportunity to comment at a hearing, a public meeting, rather than a public hearing, may be held. Persons wishing to meet with OSMRE representatives to discuss the proposed amendments may request a meeting at the OSMRE office listed under "**ADDRESSES**" by contacting the person listed under "**FOR FURTHER INFORMATION CONTACT.**" All such meetings will be open to the public and, if possible, notices of meetings will be posted at the locations listed under "**ADDRESSES.**" A written summary of each meeting will be made a part of the Administrative Record.

List of Subjects in 30 CFR Part 925

Coal Mining, Intergovernmental relations, Surface mining, Underground mining.

Raymond L. Lowrie,

Assistant Director, Western Field Operations.

Date: February 16, 1988.

[FR Doc. 88–4119 Filed 2–25–88; 8:45 am]

BILLING CODE 4310–05–M

VETERANS ADMINISTRATION

38 CFR Part 21

Veterans Education; Clarification of Mitigating Circumstances

AGENCY: Veterans Administration.

ACTION: Proposed regulations.

SUMMARY: The law requires that the Veterans Administration (VA) not pay a veteran for a course from which he or she withdraws without mitigating circumstances. When he or she withdraws without mitigating circumstances, the veteran is paid through the date of withdrawal. In the course of administering the various veterans' education programs the VA has establsihed a policy of considering the circumstances surrounding a withdrawal during a drop-add period to have been mitigating. However, this policy has not appeared in the appropriate regulations. These amended regulations correct this oversight and inform the public of the way in which the VA is administering this provision of law.

DATE: Comments must be received on or before March 29, 1988. Comments will be available for public inspection until April 12, 1988.

ADDRESSES: Send written comments to: Administrator of Veterans Affairs (271A), Veterans Administration, 810 Vermont Avenue, NW., Washington, DC 20420. All written comments received will be available for public inspection only in the Veterans Services Unit, room 132 of the above address between the hours of 8 a.m. to 4:30 p.m., Monday through Friday (except holidays) until April 12, 1988.

FOR FURTHER INFORMATION CONTACT: June C. Schaeffer, Assistant Director for Education Policy and Program Administration, Vocational Rehabilitation and Education Service, Department of Veterans Benefits, (202) 233–2092.

SUPPLEMENTARY INFORMATION: In the course of amending 38 CFR 21.4135 the VA received a comment that the VA's long-standing policy concerning mitigating circumstances surrounding a withdrawal during a drop-add period should be in the Code of Federal Regulations. It was not appropriate to place this policy in 38 CFR 21.4135, but on page 37614 of the **Federal Register** of October 8, 1987 (52 FR 37614), the VA stated that it would consider whether the appropriate regulations should be amended in the manner suggested by the commenter.

The VA has finished its consideration and concluded that the appropriate regulations should be amended. Consequently, it is proposing amendments to 38 CFR 21.4136 and 21.4137 which state the VA's policy concerning withdrawals during drop-add periods. The Agency will propose a similar amendment to 38 CFR 21.5130 at a later date.

The VA has determined that these proposed amended regulations do not contain a major rule as that term is defined by E.O. 12291, entitled Federal Regulation. The regulations will not

have a $100 million annual effect on the economy, and will not cause a major increase in costs or prices for anyone. They will have no significant adverse effects on competition, employment, investment, productivity, innovation, or on the ability of United States-based enterprises to compete with foreign-based enterprises in domestic or export markets.

The Administrator of Veterans Affairs has certified that these proposed amended regulations, if promulgated, will not have a significant economic impact on a substantial number of small entities as they are defined in the Regulatory Flexibility Act (RFA), 5 U.S.C. 601–612. Pursuant to 5 U.S.C. 605(b), the amended regulations, therefore, are exempt from the initial and final regultory flexibility analyses requirements of sections 603 and 604.

This certification can be made because the proposed regulations affect only individuals. They will have no signfiicant economic impact on small entities, i.e., small businesses, small private and nonprofit organizations and small governmental jurisdictions.

The Catalog of Federal Domestic Assistance numbers for the programs affected by these regulations are 64.111 and 64.117.

List of Subjects in 38 CFR Part 21

Civil rights, Claims, Education, Grant programs-education, Loan programs-education, Reporting and recordkeeping requirements, Schools, Veterans, Vocational education, Vocational rehabilitation.

Approved: February 2, 1988.

Thomas K. Turnage,

Administrator.

38 CFR Part 21, Vocational Rehabilitation and Education, is proposed to be amended as follows:

PART 21—[AMENDED]

1. In § 21.4136, paragraph (k)(4) is added to read as follows:

§ 21.4136 Rates; educational assistance allowance; 38 U.S.C. Chapter 34.

* * * * *

(h) *Mitigating circumstances.*

* * * * *

(4) If the student withdraws from a course during a drop-add period, the VA will consider the circumstances which caused the withdrawal to be mitigating. Veterans who withdraw from a course during a drop-add period are not subject to the reporting requirement found in paragraph (k)(1)(ii) of this section.

(Authority: 38 U.S.C. 1780(a))

* * * * *

2. In § 21.4137, paragraph (h)(4) is added to read as follows:

§ 21.4137 Rates; educational assistance allowance; 38 U.S.C. Chapter 34.

* * * * *

(h) *Mitigating circumstances.*

* * * * *

(4) If an eligible person withdraws from a course during a drop-add period, the VA will consider the circumstances which caused the withdrawal to be mitigating. Eligible persons who withdraw from a course during a drop-add period are not subject to the reporting requirement found in paragraph (h)(1)(ii) of this section.

(Authority: 38 U.S.C. 1780(a))

* * * * *

[FR Doc. 88–4154 Filed 2–25–88; 8:45 am]

BILLING CODE 8320-01-M

INTERSTATE COMMERCE COMMISSION

49 CFR Part 1201

[Ex Parte No. 393 (Sub-No. 2)]

Supplemental Reporting of Consolidated Information for Revenue Adequacy Purposes

AGENCY: Interstate Commerce Commission.

ACTION: Decision and supplemental notice of proposed rulemaking.

SUMMARY: This Decision incorporates a Supplemental Notice of Proposed Rulemakaing (SNPR) to revise our proposal included in our original Notice of Proposed Rulemaking in this proceeding. In our original notice, we proposed new reporting requirements for Class I railroads to accommodate revenue adequacy standards changes adopted in Ex Parte No. 393 (Sub-No. 1), Standards for Revenue Adequacy (not printed, served December 31, 1986). The Commission is now proposing changes to adopt the Railroad Accounting Principles Board's Entity Principle. This SNPR proposes calculating Return on Investment (ROI) for revenue adequacy purposes on a combined/consolidated system basis, following the Board's definition of entity, contains a methodology for adding interest income on the working capital allowance to net railway operating income (NROI) and proposes alternatives for excluding income taxes on nonoperating income. The changes will be accomplished by adding a new schedule to railroad Annual Report Form R–1.

DATE: Comments are due on April 11, 1988.

FOR FURTHER INFORMATION CONTACT: Brian A. Holmes, (202) 275–7510. [TDD for hearing imapired: (202) 275–1721]

SUPPLEMENTARY INFORMATION: The Commission proposed to incorporate certain changes adopted in Ex Parte No. 393 (Sub-No. 1) in its Notice of Proposed Rulemaking (NPR) served May 11, 1987 and published in the **Federal Register** on May 12, 1987 (52 FR 17792). Based on the comments received and due to the issuance of the Final Report on Railroad Accounting Principles by the Railroad Accounting Principles Board (RAPB) new issues have been raised since the NPR was issued. We believe additional comments would be useful. Thus, we are issuing this SNPR.

Additional information is contained in the Commission's decision. To obtain a copy of the full decision, write to the Office of the Secretary, Room 2215, Interstate Commerce Commission Building, Washington, DC 20423 or call (202) 275–7428, (assistance for the hearing impaired is available through TDD services (202) 275–1721, or by pick-up from Dynamic Concepts, Inc. in Room 2229 at Commission headquarters).

The information collection requirements contained in this proposal will be submitted to the Office of Management and Budget (OMB) for review under section 3504(h) of the Paperwork Reduction Act of 1980 (44 U.S.C. Chapter 35). Respondents may direct comments on any paperwork burden to OMB by addressing them to the Office of Information and Regulatory Affairs, Office of Management and Budget, Attention: Desk Officer for Interstate Commerce Commission.

List of Subjects in 49 CFR Part 1201

Railroads, Uniform System of Accounts.

Decided: February 16, 1988.

By the Commission, Chairman Gradison, Vice Chairman Andre, Commissioners Sterrett, Simmons, and Lamboley.

Noreta R. McGee,

Secretary.

Title 49 of the Code of Federal Regulations is proposed to be amended as follows:

PART 1201—RAILROAD COMPANIES

Subpart A—Uniform System of Accounts

1. The authority citation for Part 1201, Subpart A would continue to read as follows:

Authority: 49 U.S.C. 11166 and 5 U.S.C. 553, unless otherwise noted.

2. Instruction 1-9, *Transactions with affiliated companies*, is proposed to be amended by adding paragraph (f) as follows:

Instruction 1-9 Transactions with affiliated companies.

* * * * *

(f) Carriers reporting information on a consolidated or combined basis in railroad Annual Report Form R-1 shall maintain a file with appropriate records and supporting data. This should include work sheets showing revenues, expenses, earnings, investments in assets and accumulated depreciation for all rail related affiliated companies. The work sheets should also disclose any eliminations. Carriers need to disclose the methodology used to support segregation of rail related or other items as appropriate.

Ex Parte No. 393 (Sub-No. 2)

250 CONSOLIDATED INFORMATION FOR REVENUE ADEQUACY DETERMINATION

[Dollars in thousands]

Line No.	Item (a)	Amount (b)
	Adjusted Net Railway Operating Income For Reporting Entity	
1	Combined/Consolidated Net Railway Operating Income For Reporting Entity	
2	Add: Interest Income from Working Capital Allowance—Cash Portion	
3	Income Taxes Associated with Non-Rail Income and Deductions	
4	Gain or (loss) from transfer/reclassification to nonrail-status	
5	Adjusted Net Railway Operating Income	
	Adjusted Investment in Railroad Property For Reporting Entity	
6	Combined Investment in Railroad Property Used in Transportation Service	
7	Less: Interest During Construction	
8	Other Elements of Investment (if debit balance)	
9	Add: Net Rail Assets of Rail Related Affiliates	
10	Working Capital Allowance	
11	Net Investment Base before Adjustment for Deferred Taxes	
12	Less: Accumulated Deferred Income Tax Credits	
13	Net Investment Base	
	List of qualifying affiliates and nature of business	

Instructions for Schedule 250

This schedule is to be completed by all railroads unless a consolidated schedule is filed. When a consolidated schedule is filed, only one Class I railroad in the affiliated group need file this schedule. Nonfiling carriers within the group should indicate which affiliated railroad is filing the consolidated schedule.

The following instructions should be followed in completing this schedule:

Line

1—Consolidated Net Railway Operating Income (NROI) should be prepared following the format appearing at the end of Schedule 210 and include all affiliated railroad companies (Classes I, II, III, line-haul and switching and terminal) and all rail-related affiliated companies.

Revenues and expenses from rail-related affiliates should include only rail-related revenues and expenses. If rail-related and nonrail-related revenues and expenses cannot be segregated, or if such segregation is impractical, they may be included in or excluded from NROI in their entirety based on whether the affiliate is predominantly rail-related (i.e., whether the affiliate could exist except for the revenue derived from, or the support provided for, railroad operations).

Consolidation procedures should follow generally accepted accounting principles.

2—Interest Income is the actual interest earned on the portion of cash and temporary cash investments contained in the working capital allowance calculated for the railroad companies in the entity according to the format in Schedule 245. If the cash working capital required is less than the total cash and temporary cash investment accounts, then a ratio of cash working capital required/cash and temporary cash investments may be applied to actual interest earned on these accounts to arrive at interest income associated with the cash working capital allowance.

3—Income taxes (both current and deferred) associated with significant nonrail income and deductions would include items such as the tax impact of the sale of property or income and/or deductions from nonrail sources.

4—Any railroad-related transaction between the railroad entity and others (including affiliates that are not a part of the consolidated entity), or any reclassification of property from carrier to noncarrier status within the entity, shall be reflected at fair market value at the time of the transaction or reclassification. Gain or loss shall be recognized at the same time and reported on this line.

6—This line should include the total investment in railroad property used in transportation service for the consolidated entity, net of accumulated depreciation. Schedule 352A may be used as a guide.

7—This should include total interest during construction for the railroads in the consolidated entity.

8—This should include total account 80 *debit* balances for the railroads in entity.

9—This is the total rail assets, net of accumulated depreciation, of rail-related affiliated companies in the consolidated entity.

10—This line represents the working capital allowance calculated for railroads in the consolidated entity. Procedures in Schedule 245 should be used for this calculation.

12—Self-explanatory.

In the space provided at the bottom of this schedule, please list all railroads and rail-related affiliated companies which are being reported in this consolidation, along with the nature of the business of each company.

[FR Doc. 88-4151 Filed 2-25-88; 8:45 am]

BILLING CODE 7035-01-M

DEPARTMENT OF COMMERCE

National Oceanic and Atmospheric Administration

50 CFR Part 641

[Docket No. 71154-7254]

Reef Fish Fishery of the Gulf of Mexico

AGENCY: National Marine Fisheries Service (NMFS), NOAA, Commerce.

ACTION: Proposed rule; regulatory amendment.

SUMMARY: NOAA issues this proposed rule to amend the implementing regulations for the Fishery Management Plan for the Reef Fish Resources of the Gulf of Mexico (FMP) which currently provide an exemption from the red snapper minimum size limit for persons catching red snapper in trawls. This proposed rule would limit the current exemption from the minimum size limit for red snapper to a person fishing with a trawl for species other than reef fish, provided the total weight of red snapper does not exceed five percent of all other species on board. This proposed rule would also remove expired language exempting undersized red snapper caught by persons fishing from headboats, and make other minor, technical corrections. The intent of the proposed rule is to reduce the mortality of undersized red snapper, to hasten recovery of the fishery stock, and to clarify the regulations.

DATE: Written comments on this proposed rule are invited until March 28, 1988.

ADDRESS: Send comments on this proposed rule to William R. Turner, Southeast Region, National Marine Fisheries Service, 9450 Koger Boulevard, St. Petersburg, FL 33702.

FOR FURTHER INFORMATION CONTACT: William R. Turner, 813-893-3722.

SUPPLEMENTARY INFORMATION: The reef fish fishery of the Gulf of Mexico is managed under the FMP, which was prepared by the Gulf of Mexico Fishery Management Council (Council), and its implementing regulations at 50 CFR Part 641. Section 641.23(b)(3) exempts from the minimum size limit red snapper caught by persons lawfully fishing with trawls from domestic vessels in the exclusive economic zone (EEZ). The rationale in the FMP for this exemption was to prevent wastage of the few undersized red snapper caught in shrimp trawls and to avoid making vessels in the groundfish fishery cull the very small red snapper taken in this mixed species fishery.

Some fishermen who target reef fish species in the Gulf are landing and selling undersized red snapper taken from the EEZ, claiming the fish were caught in trawls. In some cases, undersized red snapper are transferred at sea to trawl vessels. In other cases, trawls are carried aboard hook-and-line vessels merely to support a claim that undersized red snapper were caught by trawl gear. Through these artifices, fishermen are using the current wording of the trawl exemption to frustrate enforcement of the size limit on red snapper.

The language of the trawl exemption is § 641.23(b)(3) goes far beyond the intent of the Council as expressed in the FMP. Accordingly, the exemption for trawl-caught undersized red snapper is proposed to be amended by applying it only to a person who is trawling for species other than reef fish. A person would be considered to be trawling for other species when the total weight of red snapper did not exceed five percent of all other fish on board. In addition, a prohibition on transfer of red snapper from one vessel to another at sea is proposed, in order to deal with the problem of transfer of undersized red snapper from hook-and-line vessels to trawl vessels. The effect of these changes would be to limit the exemption to the purposes expressed for it in the FMP.

This proposed rule would also (1) revise the definition for authorized officer to clarify the participants in an enforcement agreement through which a State or Federal officer becomes an authorized officer, (2) add a phrase to the definition of exclusive economic zone to conform to current usage, (3) revise § 641.3(b) to clarify that the U.S. Coast Guard is not a party to a State/Federal agreement for data collection, and (4) in § 641.23(b), remove the exemption for persons fishing from headboats from the size limit for red snapper, which expired on May 8, 1987.

Classification

The Director, Southeast Region, NMFS, determined that this amendment is necessary for the conservation and management of the reef fish fishery and that it is consistent with the Magnuson Act and other applicable law.

This proposed rule conforms regulatory language to a provision of the existing FMP and makes other technical corrections in the regulations implementing the FMP. It does not result in a significant change in the original environmental impact statement for the FMP and, thus, is categorically excluded from the requirement to prepare an environmental assessment by NOAA Directive 02-10.

The Assistant Administrator for Fisheries, NOAA, determined that this proposed rule is not a major rule requiring a regulatory impact analysis under Executive Order 12291. No cost to the fishing industry or change in fishing practices is likely to result since legitimate shrimp and groundfish trawl vessels do not normally exceed the five percent bycatch limitation proposed in this rule. This rule will contribute to reducing mortality of undersized red snapper as was intended in the FMP. Reduction of mortality and the exemption for trawl-caught red snapper were fully considered in the regulatory impact review prepared when the FMP was implemented. Other aspects of this proposed rule are minor and technical.

The Deputy General Counsel of the Department of Commerce certified to the Small Business Administration that the proposed rule, if adopted, will not have a significant economic impact on a substantial number of small entities. This is because the revised exemption to the minimum size limit, which applies only when the quantity of red snapper is not more than five percent of the total weight of all other fish on board, is not expected to affect a substantial number of small entities. The 14,000 shrimp and groundfish trawl vessels operating in the Gulf of Mexico normally do not have red snapper on board exceeding the five percent catch limit, and would, therefore, continue to be exempt. Thus the rule would affect only those few operators who attempt to subvert the regulations. The revision would close a loophole in the rule for a relatively small number of hook-and-line or other vessels, and will serve to achieve the intended objectives of the FMP. All other proposed changes are technical and would not affect current operating practices or impose costs on the fishermen. As a result, a regulatory flexibility analysis was not prepared.

This rule does not contain a collection of information requirement subject to the Paperwork Reduction Act.

In the final rule that implemented the FMP (49 FR 39553, October 4, 1984), NOAA concluded that, to the maximum extent practicable, the FMP is consistent with the coastal zone management programs of each State adjoining the Gulf of Mexico (except Texas, which does not have an approved program under the Coastal Zone Management Act). Since this rule, if adopted, does not directly affect the coastal zone in a manner not already fully evaluated in the FMP and the initial consistency

determination, a new consistency determination is not required.

List of Subjects in 50 CFR Part 641

Fisheries, Fishing, Reporting and recordkeeping requirements.

Dated: February 22, 1988.

James E. Douglas, Jr.,

Deputy Assistant Administrator For Fisheries, National Marine Fisheries Service.

For the reasons set forth in the preamble, 50 CFR Part 641 is proposed to be amended as follows:

PART 641—REEF FISH FISHERY OF THE GULF OF MEXICO

1. The authority citation for Part 641 continues to read as follows:

Authority: 16 U.S.C. 1801 *et seq.*

2. In § 641.2, under the definition for *Authorized officer*, paragraph (c) is revised and under the definition for *Exclusive economic zone (EEZ)*, a phrase is added between the words "means the" and the word "area" to read as follows:

§ 641.2 Definitions.

* * * * *

Authorized officer means * * *

(c) Any officer designated by the head of any Federal or State agency which has entered into an agreement with the Secretary and the Commandant of the U.S. Coast Guard to enforce the provisions of the Magnuson Act; or

* * * * *

Exclusive economic zone (EEZ) means the zone established by Presidential Proclamation 5030, dated March 10, 1983, and is that area * * *

* * * * *

3. In § 641.3, paragraph (b) is revised to read as follows:

§ 641.3 Relationship to other laws.

* * * * *

(b) Certain responsibilities relating to date collection and enforcement may be performed by authorized State personnel under a State/Federal agreement for data collection and a tripartite agreement among the State, the U.S. Coast Guard, and the Secretary for enforcement.

4. In § 641.7, paragraphs (a)(17) and (18) are redesignated (a)(18) and (19), respectively, and a new paragraph (a)(17) is added to read as follows:

§ 641.7 Prohibitions.

(a) * * *

(17) Transfer at sea in the EEZ any red snapper from any fishing vessel to any other vessel or transfer at sea any red snapper taken from the EEZ;

* * * * *

5. § 641.23, paragraph (b)(2) is removed; paragraph (b)(3) is redesignated (b)(2) and is revised to read as follows:

§ 641.23 Size and incidental catch restrictions.

* * * * *

(b) * * *

(2) A person fishing with a trawl for species other than reef fish is exempt from the minimum size limit for red snapper. For the purposes of this paragraph, a person fishing with a trawl is considered to be fishing for species other than reef fish when the total weight of red snapper does not exceed five percent of all other fish (including shrimp) aboard.

* * * * *

[FR Doc. 88-4173 Filed 2-24-88; 9:29 am]

BILLING CODE 3510-22-M

Notices

Federal Register
Vol. 53, No. 38
Friday, February 26, 1988

This section of the FEDERAL REGISTER contains documents other than rules or proposed rules that are applicable to the public. Notices of hearings and investigations, committee meetings, agency decisions and rulings, delegations of authority, filing of petitions and applications and agency statements of organization and functions are examples of documents appearing in this section.

DEPARTMENT OF AGRICULTURE

Agricultural Research Service

A-76 Cost Comparison Studies

AGENCY: Agricultural Research Service (ARS), USDA.

ACTION: Notice of intent.

SUMMARY: Notice is hereby given that the ARS, is conducting A-76 cost comparison studies of facilities operations, maintenance, and repair functions at various ARS research centers. The following studies are in process and will be synopsized in the Commerce Business Daily with instructions for potential contractors concerning submission deadlines of proposals:

(1) Western Regional Research Center, Albany, CA
Solicitation to be released on or about November 6, 1987
Facilities Operations, Maintenance, and Repair
Administrative Support Services
Internal Mail and Messenger Services

(2) U.S. National Arboretum, Washington, DC & Plant Introduction Station, Glenn Dale, MD
Solicitation to be released on or about December 28, 1987
Facilities Operations, Maintenance, and Repair

(3) National Animal Disease Center, Ames, IA
Study began October 1, 1987
Facilities Operations, Maintenance, and Repair
Administrative Support Services
Internal Mail and Messenger Services
Graphic Illustration Services

(4) Plum Island Animal Disease Center, Long Island, NY
Study will begin October 1, 1988
Facilities Operations, Maintenance, and Repair

(5) Delta States Research Center, Stoneville, MS
Study will begin October 1, 1988
Facilities Operations, Maintenance, and Repair.

FOR FURTHER INFORMATION CONTACT: Anne Campbell, ARS, Special Projects Section, ESB, CAD; 4th Floor, NAL Building, Beltsville, Maryland 20705, (301/344-3126).

T.B. Kinney, Jr.,
Administrator.

[FR Doc. 88-4116 Filed 2-25-88; 8:45 am]

BILLING CODE 3410-03-M

DEPARTMENT OF COMMERCE

Export Administration

[Docket No. 7112-02]

Actions Affecting Export Privileges; United Exporters Co.

Summary

Pursuant to the Decision and Order of the Administrative Law Judge, which Decision and Order is affirmed by me, United Exporters Company, with an address at One Sutter Street, San Francisco, California 99104, is fined the sum of $8,000.00 (payable in annual installments of $2,000.00 each) and denied all export privileges for a period of two (2) years from the date hereof, which denial period is suspended so long as United Exporters Company shall be in compliance with the provisions of the Export Administration Act and the Regulations thereunder.

Order

On January 22, 1988, the Administrative Law Judge entered his recommended Decision and Order in the above referenced matter. That Decision and Order, a copy of which is attached hereto and make a part hereof, has been referred to me for final action. Having examined the record, and based on the facts of this case, I affirm the Decision and Order of the Administrative Law Judge.

This constitutes final agency action in this matter.

Date: February 22, 1988.

Paul Freedenberg,
Acting Under Secretary for the Bureau of Export Administration.

Decision

In the Matter of United Exporters Company, Respondent, Docket No. 7112-02.

Appearance for Respondent: Barbara L. Waite, Esq., Weadon, Dibble & Rehm, 1301 Pennsylvania Ave., NW., Washington, DC 20004.

Appearance for Agency: Joan L. McKenzie, Esq., Attorney-Advisor, Office of the Deputy Chief, Counsel for Export Administration, U.S. Department of Commerce, Room H-3329, Washington, DC 20230.

An administrative proceeding was initiated against United Exporters Company [1] pursuant to section 13(c) of the Export Administration Act of 1979 (50 U.S.C.A. app. 2401-2420, as amended by the Export Administration Amendments Act of 1985, Pub. L. 99-64, 99 Stat. 120 (July 12, 1985)) (Act), and the Export Administration Regulations (currently codified at 15 CFR Parts 368-399 (1987)), (Regulations).[2] The Office of Export Administration issued a charging letter on August 19, 1987, alleging that on or about November 23, 1983, United Exporters violated §§ 387.3, 387.4, and 387.5 of the Regulations, in that Respondent attempted to export from the United States to Hong Kong five U.S.-origin disk drive systems without applying for and obtaining from the Department the validated export license which United Exporters knew or had reason to know was required.

Pursuant to 15 CFR 388.17, the Agency and Respondent have agreed to and submitted a consent proposal to this office whereby Respondent admits the facts alleged in the charging letter, but assets the violations were inadvertent. This matter is being settled by Respondent's payment of a civil penalty in the amount of $8,000 to be paid in four annual installments of $2,000 and a denial of export privileges for 2 years which is to be suspended.

[1] The proceeding was initially initiated against Myra Berkowitz, individually and doing business as United Exporters Company. Agency counsel moved to amend the charging letter to remove Myra Berkowitz as a respondent, which has been granted. The proceeding with respect to her individually, under docket number 7112-01, has been marked as withdrawn and removed from the docket.

[2] Though these proceedings are being conducted under the above cited legislative and regulatory provisions, the violations are alleged to have occurred during a period in 1983 when the Export Administration Act had expired. Presidential Executive Order 12444 (48 FR 13099, October 18, 1983) issued under the International Emergency Economic Powers Act (50 U.S.C 1701-1706 (1982)) continued the same regulatory regime in effect.

I find that the facts set forth in the charging letter are true and constitute violations of the Act and the Regulations. I further find that Respondent, wishing to settle and dispose of the matters alleged in the charging letter has agreed to these terms which are sufficient to achieve effective enforcement of the Act and the Regulations.[3] Therefore, pursuant to the authority delegated to me by Part 388 of the Regulations, *It is ordered that:*

Order

I. Respondent United Exporters Company is assessed a civil penalty of $8,000. Such civil penalty shall be paid to the Agency in four installments of $2,000 each. The first payment is due 30 days from service on Respondent, United Exporters Company, of the final order. The remaining three payments shall be made annually on the last day of the month in which United Exporters Company was served with the final Order. Each payment shall be made in accordance with the attached instructions.

II. For a period of 2 years from the date of the final Agency action, as modified by the suspension set forth in Paragraph III below, Respondent United Exporters Company, One Sutter Street, San Francisco, California 99104 and all successors, assignees, officers, partners, representatives, agents, and employees hereby are denied all privileges of participating, directly or indirectly, in any manner or capacity, in any transaction involving commodities or technical data exported from the United States in whole or in part, or to be exported, or that are otherwise subject to the Regulations.

III. Commencing from the date that this Order becomes effective, the denial of export privileges set forth above shall be suspended, in accordance with § 388.16 of the Regulations, for the 2-year period set forth in Paragraph II above, and shall be terminated at the end of such period, provided that Respondent has committed no further violations of the Act, the Regulations, or the final Order entered in this proceeding. During the 2-year suspension period, Respondent may participate in transactions involving the export of the U.S.-origin commodities or technical data from the United States or abroad in accordance with the requirements of the Act and the regulations. The provisions of Paragraph IV to VII of the Order are also suspended during the 2-year period.

IV. Participation prohibited in any such transaction, either in the United States or abroad, shall include, but not be limited to, participation:

(i) As a party or as a representative of a party to a validated export license application;

(ii) In preparing or filing any export license application or reexport authorization, or any document to be submitted therewith;

(iii) In obtaining or using any validated or general export license or other export control document;

(iv) In carrying on negotiations with respect to, or in receiving, ordering, buying, selling, delivering, storing, using, or disposing of, in whole or in part, any commodities or technical data exported from the United States, or to be exported; and

(v) In the financing, forwarding, transporting, or other servicing of such commodities or technical data.

Such denial of export privileges shall extend to matters which are subject to the Act and the Regulations.

V. After notice and opportunity for comment, such denial of export privileges may be made applicable to any person, firm, corporation, or business organization with which the Respondent is now or hereafter may be related by affiliation, ownership, control, position of responsibility, or other connection in the conduct or export trade or related services.

VI. All outstanding individual validated export licenses in which Respondent appears or participates, in any manner or capacity, are hereby revoked and shall be returned forthwith to the Office of Export Licensing for cancellation. Further, all of Respondent's privileges of participating, in any manner or capacity, in any special licensing procedure, including, but not limited to, distribution licenses, are hereby revoked.

VII. No person, firm corporation, partnership, or other business organization, whether in the United States or elsewhere, without prior disclosure and specific authorization from the Office of Export Licensing, shall, with respect to U.S.-origin commodities and technical data, do any of the following acts, directly or indirectly, or carry on negotiations with respect thereto, in any manner or capacity, on behalf of or in any association with any Respondent or any related person, or whereby any Respondent or related person may obtain any benefit therefrom or have any interest or participation therein, directly or indirectly:

(a) Apply for, obtain, transfer, or use any license, Shipper's Export Declaration, bill of lading, or other export control document relating to any export, reexport, transshipment, or diversion of any commodity or technical data exported in whole or in part, or to be exported by, to, or for any Respondent or related person denied export privileges, or

(b) Order, buy, receive, use, sell, deliver, store, dispose of, forward, transport, finance or otherwise service or participate in any export, reexport, transshipment or diversion of any commodity or technical data exported or to be exported from the United States.

VIII. This Order as affirmed or modified shall become effective upon entry of the Secretary's final action in this proceeding pursuant to the Act (50 U.S.C.A. app. 2412(c)(1)).

Hugh J. Dolan,

Administrative Law Judge.

Date: January 22, 1988.

[FR Doc. 88-4099 Filed 2-25-88; 8:45 am]

BILLING CODE 3510-DT-M

[3] The form and language of the following order varies considerably from that proposed by Agency counsel, but does not vary from the terms of the settlement agreement. The proposed order would be insufficient in the event of a violation during a period of suspension. The language used is that which has recently been utilized to provide standard and complete terms.

Foreign-Trade Zones Board

[Order No. 375]

Resolution and Order Approving the Application of the Economic Development Council for the Peoria Area for a Subzone for Diamond-Star Motors in Normal, IL

Proceedings of the Foreign-Trade Zones Board, Washington, DC.

Resolution and Order

Pursuant to the authority granted in the Foreign-Trade Zones Act of June 18 1934, as amended (19 U.S.C. 81a–81u), the Foreign-Trade Zones Board has adopted the following Resolution and Order:

The Board, having considered the matter, hereby orders:

After consideration of the application of the EDC, Inc., the Economic Development Council for the Peoria Area, grantee of FTZ 114, filed with the Foreign-Trade Zones Board (the Board) on September 2, 1986, requesting special-purpose subzone status for the automobile manufacturing plant of Diamond-Star Motors Corporation in Normal, Illinois, adjacent to the Peoria Customs port of entry, the Board, finding that the requirements of the Foreign-Trade Zones Act, as amended,

and the Board's regulations are satisfied, and that the proposal is in the public interest, approves the application.

The Secretary of Commerce, as Chairman and Executive Office of the Board, is hereby authorized to issue a grant of authority and appropriate Board Order.

Grant of Authority to Establish a Foreign-Trade Subzone at the Diamond-Star Motors Plant in Normal, IL

Whereas, by an Act of Congress approved June 18, 1934, an Act "To provide for establishment, operation, and maintenance of foreign-trade zones in ports of entry of the United States, to expedite and encourage foreign commerce, and for other purposes," as amended (19 U.S.C. 81a–81u) (the Act), the Foreign-Trade Zones Board (the Board) is authorized and empowered to grant to corporations the privilege of establishing, operating, and maintaining foreign-trade zones in or adjacent to ports of entry under the jurisdiction of the United States;

Whereas, the Board's regulations (15 CFR 400.304) provide for the establishment of special-purpose subzones when existing zone facilities cannot serve the specific use involved, and where a significant public benefit will result;

Whereas, the EDC, Inc., the Economic Development Council for the Peoria Area, grantee of Foreign-Trade Zone No. 114, has made application (filed September 2, 1986, Docket 29–86, 51 FR 32504) in due and proper form to the Board for authority to establish a special-purpose subzone at the automobile manufacturing plant of Diamond-Star Motors Corporation in Normal, Illinois, adjacent to the Peoria Customs port of entry;

Whereas, notice of said application has been given and published, and full opportunity has been afforded all interested parties to be heard; and

Whereas, the Board has found that the requirements of the Act and the Board's regulations are satisfied;

Now Therefore, in accordance with the application filed September 2, 1986, the Board hereby authorizes the establishment of a subzone at the Diamond-Star plant in Normal, Illinois, designated on the records of the Board as Foreign-Trade Subzone No. 114C at the location mentioned above and more particularly described on the maps and drawings accompanying the application, said grant of authority being subject to the provisions and restrictions of the Act and the Regulations issued thereunder, to the same extent as though the same were fully set forth herein, and also to the following express conditions and limitations:

Activation of the subzone shall be commenced within a reasonable time from the date of issuance of the grant, and prior thereto, any necessary permits shall be obtained from Federal, state, and municipal authorities.

Officers and employees of the United States shall have free and unrestricted access to and throughout the foreign-trade subzone in the performance of their official duties.

The grant shall not be construed to relieve responsible parties from liability for injury or damage to the person or property of others occasioned by the construction, operation, or maintenance of said subzone, and in no event shall the United States be liable therefor.

The grant is further subject to settlement locally by the District Director of Customs and the District Army Engineer with the grantee regarding compliance with their respective requirements for the protection of the revenue of the United States and the installation of suitable facilities.

In Witness Whereof, the Foreign-Trade Zones Board has caused its name to be signed and its seal to be affixed hereto by its Chairman and Executive Officer or his delegate at Washington, DC, this 19th day of February, 1988, pursuant to Order of the Board.

Gilbert B. Kaplan,

Acting Assistant Secretary of Commerce for Import Administration, Chairman, Committee of Alternates.

Attest:

John J. Da Ponte, Jr.,

Executive Secretary.

[FR Doc. 88–4171 Filed 2–25–88; 8:45 am]

BILLING CODE 3510-DS-M

International Trade Administration

[Docket No. 71152-7252]

Antidumping and Countervailing Duty Proceedings; Proposed Procedures for Review of Calculations and Correction of Clerical Errors

AGENCY: International Trade Administration, Import Administration, Commerce.

ACTION: Notice of temporary procedures for review of calculations and corrections of clerical errors.

SUMMARY: The Department of Commerce is adopting, on a six-month temporary basis, procedures for correcting clerical errors in the final determinations in all antidumping and countervailing duty investigations and in the final results of administrative reviews, after disclosure of all relevant information to parties to the proceeding that request disclosure.

DATES: This procedure will be effective February 26, 1988, and will terminate August 26, 1988.

Comments: Comments on these temporary procedures should be submitted in writing as early as is practicable but not later than six months from February 26, 1988.

ADDRESS: Address written comments (10 copies) to Gilbert B. Kaplan, Acting Assistant Secretary, Import Administration, Room B–099, U.S. Department of Commerce, Washington, DC 20230.

FOR FURTHER INFORMATION CONTACT: Gilbert B. Kaplan, Acting Assistant Secretary, Import Administration, Room B–099, U.S. Department of Commerce, Washington, DC 20230, telephone (202) 377–1780.

SUPPLEMENTARY INFORMATION: Beginning immediately in all antidumping and countervailing duty investigations and administrative reviews under section 303 and Title VII of the Tariff Act of 1930, as amended (19 U.S.C. 1303 and Subtitle IV) ("the Act"), the Department of Commerce will provide to parties to the proceeding that request disclosure within three business days of the relevant final determination or final results of administrative review a full explanation of such final determination or final results. The 30-day delayed effective date is unnecessary because this procedural rule imposes no burden on parties to these cases. The Department will conduct disclosure promptly after receiving a request. Under administrative protective order, if applicable, the Department will disclose at the disclosure meeting a copy of relevant computer print-outs and worksheets to parties that request these documents. A request for a copy of the relevant computer print-outs and worksheets must be made at the time the request for disclosure is made.

All parties to the proceeding that have requested disclosure and have received copies of relevant documents may submit comments concerning any clerical errors in the Department's calculations. Comments must be submitted to the Department not later than five business days after the date of disclosure, unless the Department extends the time limit based on a written request for extension showing cause for such extension submitted by a party to the proceeding to whom the Department has disclosed its final calculations.

Following receipt of comments, if any, the Department will analyze comments received and, if appropriate, correct any clerical errors in the final determination or final results of review. For investigations under Subtitle IV of the Act, the Department will publish notice of its corrections, if any, in the countervailing or antidumping duty order. For countervailing duty investigations under section 303 of the Act and for all countervailing and antidumping duty administrative reviews under section 751 of the Act, the Department will publish in the **Federal Register** an amendment to the published order, or notice of final results of review, to be corrected.

At the end of the six-month period, the Department will review the implementation of these procedures based on its experience and on comments received. The public is invited to submit written comments on the procedures described in this notice.

Gilbert B. Kaplan,

Acting Assistant Secretary for Import Administration.

Date: February 19, 1988.

[FR Doc. 88-4170 Filed 2-25-88; 8:45 am]

BILLING CODE 3510-DS-M

Caribbean Basin Business Promotion Council; Open Meeting

AGENCIES: International Trade Administration, Commerce.

SUMMARY: This is the first meeting of the Council. The Council was established to advise the Secretary of Commerce on matters pertinent to implementation of the Caribbean Basin Initiative (CBI). The Council's advice will be forwarded to the interagency CBI Task Force.

TIME AND PLACE: March 11, 1988 from 9:00 a.m. to 4:00 p.m. The meeting will take place at the Main Commerce Building, Room 6802, 14th Street and Constitution Avenue, NW., Washington, DC. Public entrance to the building is on 14th Street, between Constitution Avenue and E Street NW. Identification is required to gain entrance to the building.

Proposed Agenda:

1. Overview of the CBI program and a review of current legislation regarding enhancement of the CBI program.
2. Discussion of Puerto Rico's 936 finance program as it relates to economic development in the Caribbean Basin.
3. General discussion of topics regarding Council's advisory role to the Secretary.
4. Election of Chairman.
5. Discussion regarding next meeting's agenda.

Public Participation: The meeting will be open to public participation and a 45 minute period will be set aside for oral comments or questions, beginning on or around 2:45 p.m. Any member of the public may submit written comments concerning the committee's affairs at any time before and after the meeting. Approximately 30 seats will be available to the public. Seating will be available on a first-come first-served basis.

FOR FURTHER INFORMATION CONTACT: Paul D. Bucher, Caribbean Basin Information Center, U.S. Department of Commerce, Main Commerce Building, Room 3020, Washington, DC 20230. Telephone (202) 377-0703. Copies of the minutes of the Council's meeting will also be available at the above office 30 days after the meeting.

Date: February 22, 1988.

Lawrence H. Theriot,

Director, CBI Center.

[FR Doc. 88-4070 Filed 2-25-88; 8:45 am]

BILLING CODE 3510-FP-M

National Oceanic and Atmospheric Administration

Marine Mammals; Application for Permit; U.S. Fish and Wildlife Service, Fisheries (P45D)

Notice is hereby given that an Applicant has applied in due form for a permit to take endangered species as authorized by the Endangered Species Act of 1973 (16 U.S. 1513-1543), and the National Marine Fisheries Service regulations governing endangered fish and wildlife permits (50 CFR Parts 217-222).

1. *Applicant:* U.S. Fish and Wildlife Service Fisheries, 75 Spring Street, SW., Richard B. Russell Building, Atlanta, Georgia 30303.
2. *Type of Permit:* Scientific Research.
3. *Name and Number of Marine Mammals:* Shortnose sturgeon (*Acipenser brevirostrum*)—900.
4. *Type of Take:* Field investigations, hormonal spawning of broodfish, culture, rearing, tagging, and stocking of progeny to achieve propagation and restoration objectives for shortnose sturgeon. The fish will be measured and released in native streams each year.
4. *Location of Activity:* South Carolina, Georgia and Florida.
5. *Period of Activity:* 5 years.

Written data or views, or requests for a public hearing on this application should be submitted to the Assistant Administrator for Fisheries, National Marine Fisheries Service, U.S. Department of Commerce, Washington, DC 20235, within 30 days of the publication of this notice. Those individuals requesting a hearing should set forth the specific reasons why a hearing on this particular application would be appropriate. The holding of such hearing is at the discretion of the Assistant Administrator for Fisheries.

All statements and opinions contained in this application are summaries of those of the Applicant and do not necessarily reflect the views of the National Marine Fisheries Service. Documents submitted in connection with the above application are available for review by interested persons in the following offices:

Office of Protected Resources and Habitat Programs, National Marine Fisheries Service, 1825 Connecticut Avenue NW., Rm 805, Washington, DC; and

Director, Southeast Region, National Marine Fisheries Service, 9450 Koger Boulevard, St. Petersburg, Florida 33702.

Nancy Foster,

Director, Office of Protected Resources and Habitat Programs, National Marine Fisheries Service.

Date: February 23, 1988.

[FR Doc. 88-4174 Filed 2-25-88; 8:45 am]

BILLING CODE 3510-22-M

COMMITTEE FOR THE IMPLEMENTATION OF TEXTILE AGREEMENTS

Adjustment of Import Limits for Certain Cotton and Man-Made Fiber Textile Products Produced or Manufactured in the People's Republic of Indonesia

February 23, 1988.

The Chairman of the Committee for the Implementation of Textile Agreements (CITA), under the authority contained in E.O. 11651 of March 3, 1972, as amended, has issued the directive published below to the Commissioner of Customs to be effective on February 29, 1988. For further information contact Jennifer Tallarico, International Trade Specialist, Office of Textiles and Apparel, U.S. Department of Commerce, (202) 377-4212. For information on the quota status of these limits, please refer to the Quota Status Reports which are posted on the bulletin boards of each Customs port or call (202) 535-9480. For information on embargoes and quota re-openings, please call (202) 377-3715.

Summary

In the letter published below, the Chairman of the Committee for the

Implementation of Textile Agreements directs the Commissioner of Customs to increase the current limits for Categories 336, 338/339, 340, 341, 351, 369-S, 638/639, 641, 645/646 and 648 in Group I and Categories 342/642, 350, 636 and 651 in Group II, produced or manufactured in Indonesia and exported to the United States.

Background

A CITA directive dated December 31, 1987 was published in the **Federal Register** (52 FR 49468) which established import restraint limits for certain cotton, wool, man-made fiber, silk blend and other vegetable fiber textiles and textile products, produced or manufactured in Indonesia and exported during the six-month period which began on January 1, 1988 and extends through June 30, 1988.

Under the terms of the Bilateral Cotton, Wool, Man-Made Fiber, Silk Blend and Other Vegetable Fiber Textile Agreement, effected by exchange of notes dated September 25 and October 3, 1985, as amended, between the Governments of the United States and the Republic of Indonesia, the limits for cotton and man-made fiber textile products in Categories 336, 338/339, 340, 341, 351, 369-S, 638/639, 641, 645/646 and 648 in Group I, and Categories 342/642, 350, 636 and 651 in Group II are being increased, variously, for swing, carryforward and carryover for the six-month period January 1, 1988 through June 30, 1988.

A description of the textile categories in terms of T.S.U.S.A. numbers is available in the CORRELATION: Textile and Apparel Categories with Proposed Tariff Schedule of the United States Annotated (see **Federal Register** notice 52 FR 47745 dated December 11, 1987).

The letter to the Commissioner of Customs and the actions taken pursuant to it are not designed to implement all of the provisions of the bilateral agreement, but are designed to assist only in the implementation of certain of its provisions.

James H. Babb,

Chairman, Committee for the Implementation of Textile Agreements.

February 23, 1988.

Committee for the Implementation of Textile Agreements

Commissioner of Customs,

Department of the Treasury, Washington, DC 20229.

Dear Mr. Commissioner: This directive amends, but does not cancel, the directive issued to you on December 28, 1987 by the Chairman, Committee for the Implementation of Textile Agreements, concerning imports into the United States of certain cotton, wool, man-made fiber, silk blend and other vegetable fiber textiles and textile products, produced or manufactured in the Republic of Indonesia and exported during the six-month period which began on January 1, 1988 and extends through June 30, 1988.

Effective on February 29, 1988, the directive of December 28, 1987 is amended to adjust the previously established limits for cotton and man-made fiber textile products in the following categories in Groups I and II, as provided under the terms of the bilateral agreement, effected by exchange of notes dated September 25 and October 3, 1985, as amended [1]:

Category	Adjusted 6-mo limit [1]
Sublevels within Group I:	
336	40,169 doz.
338/339	318,372 doz.
340	220,338 doz.
341	251,686 doz.
351	77,866 doz.
369-S [2]	576,407 pds.
638/639	418, 400 doz.
641	708,820 doz.
645/646	247,754 doz.
648	631,096 doz.
Sublevels within Group II:	
342/642	100,329 doz.
350	33,814 doz.
636	138,012 doz.
651	67,692 doz.

[1] The limits have not been adjusted to account for any imports exported after December 31, 1987.
[2] In Category 369-S, only TSUSA number 366.2840.

The Committee for the Implementation of Textile Agreements has determined that these actions fall within the foreign affairs exception to the rulemaking provisions of 5 U.S.C. 553(a)(1).

Sincerely,

James H. Babb,

Chairman, Committee for the Implementation of Textile Agreements.

[FR Doc. 88-4148 Filed 2-25-88; 8:45 am]

BILLING CODE 3510-DR-M

Announcement of Import Levels for Certain Cotton, Wool, Man-Made Fiber, Silk Blend and Other Vegetable Fiber Textiles and Textile Products Produced or Manufactured in Indonesia; Correction

February 22, 1988.

In the notice and letter to the Commissioner of Customs published in the **Federal Register** on December 31, 1987 (52 FR 49468), Categories 625/626 should be deleted from the limit established for Group II for the six-month period which began on January 1, 1988 and extends through June 30, 1988.

[1] The agreement provides, in part, that: (1) Specific limits may be increased by designated percentages for swing, carryover and carryforward; and (2) administrative arrangements or adjustments may be made to resolve minor problems arising in the implementation of the agreement.

The correct designation for Group II categories should be as follows: 200-218, 220-239, 300, 301, 330, 332, 333, 342/642, 345, 349, 350, 352-354, 359-363, 369-D, 369-O, 400-444, 447/469, 600, 603, 604-O, 606, 607, 611, 618-624, 627-630, 631-O, 632-634, 636, 637, 643-644, 649-654, 659-670 and 831-859, as a group.

James H. Babb,

Chairman, Committee for the Implementation of Textile Agreements.

[FR Doc. 88-4149 Filed 2-25-88; 8:45 am]

BILLING CODE 3510-DR-M

COMMITTEE FOR PURCHASE FROM THE BLIND AND OTHER SEVERELY HANDICAPPED

Procurement List 1988; Additions

AGENCY: Committee for Purchase from the Blind and Other Severely Handicapped.

ACTION: Additions to procurement list.

SUMMARY: This action adds to Procurement List 1988 commodities to be produced by workshops for the blind and other severly handicapped.

EFFECTIVE DATE: March 28, 1988.

ADDRESS: Committee for Purchase from the Blind and Other Severely Handicapped, Crystal Square 5, Suite 1107, 1755 Jefferson Davis Highway, Arlington, Virginia 22202-3509.

FOR FURTHER INFORMATION CONTACT: C.W. Fletcher, (703) 557-1145.

SUPPLEMENTARY INFORMATION: On January 7, 1988 the Committee for Purchase from the Blind and Other Severely Handicapped published a notice (53 FR 436) of proposed additions to Procurement List 1988, December 10, 1987 (52 FR 46926).

After consideration of the relevant matter presented, the Committee has determined that the commodities listed below are suitable for procurement by the Federal Government under 41 U.S.C. 46-48c, 85 Stat. 77 and 41 CFR 51-2.6.

I certify that the following action will not have a significant impact on a substantial number of small entities. The major factors considered were:

a. The action will not result in any additional reporting, recordkeeping or other compliance requirements.

b. The action will not have a serious economic impact on any contractors for the commodities listed.

c. The action will result in authorizing small entities to produce the commodities procured by the Government.

Accordingly, the following commodities are hereby added to Procurement List 1988.

Commodities

8410-01-074-6193
8410-01-074-6194
8410-01-074-6195
8410-01-074-6196
8410-01-074-6197
8410-01-074-6198
8410-01-074-6199
8410-01-074-6200
8410-01-074-7868
8410-01-074-7869
8410-01-074-7870
8410-01-074-7871
8410-01-074-7872
8410-01-074-7873
8410-01-074-7874
8410-01-074-7003
8410-01-074-7004

C.W. Fletcher,

Executive Director.

[FR Doc. 88-4150 Filed 2-25-88; 8:45 am]

BILLING CODE 6820-33-M

DEPARTMENT OF DEFENSE

Department of the Air Force

Intent To Prepare an Environmental Impact Statement and Conduct Scoping Meetings for the Peacekeeper Rail Garrison System

The United States Air Force, Department of Defense, will prepare an Environmental Impact Statement (EIS) for use in decision making regarding the proposed deployment and peacetime operation of the Peacekeeper Intercontinental Ballistic Missile (ICBM) in the Rail Garrison basing mode.

On December 19, 1986, the President announced his decision to develop the Rail Garrison basing mode for the Peacekeeper ICBM, whereby Peacekeeper missiles would be placed on railroad cars and located within garrisons at military installations around the country. The Peacekeeper missiles would be moved on the national rail network based on national need. The President further announced that F.E. Warren AFB, Wyoming would be the main operating base for the system.

The Air Force conducted a comprehensive site-narrowing process to identify other candidate installations that could support garrisons. Ten bases (in addition to F.E. Warren AFB) have been recommended for further evaluation., These are:

Barksdale AFB, Louisiana
Blytheville AFB, Arkansas
Dyess AFB, Texas
Fairchild AFB, Washington
Grand Forks AFB, North Dakota
Little Rock AFB, Arkansas
Malmstrom AFB, Montana
Minot AFB, North Dakota
Whiteman AFB, Missouri
Wurtsmith AFB, Michigan

Each garrison will be capable of accommodating four, five, or six trains with each train transporting two Peacekeeper missiles. Under normal peacetime conditions, these trains would only move on the national rail network when returning to F.E. Warren AFB for major maintenance. The warheads would be removed prior to such movement. Fully launch-ready missiles would move on the rail network only upon direction of the National Command Authority in response to national need. Training trains which simulate the equipment on the Peacekeeper trains would use the national rail network on a regular basis to train missile crews. Such training trains would carry no missiles or warheads.

The Proposed Action is to deploy a total of 50 Peacekeeper missiles on 25 trains, with F.E. Warren AFB as the main operating base and garrisons at F.E. Warren AFB and up to ten other bases, and to build a new facility at F.E. Warren AFB for missile assembly. An Alternative Action is to deploy 100 Peacekeeper missiles on 50 trains.

The Department of the Air Force is planning to conduct a series of scoping meetings in March and April of this year to determine the nature, scope, and extent of the issues and concerns that should be addressed in the EIS. These meetings will be held in a community adjacent to F.E. Warren AFB and each of the ten other candidate deployment bases. Notice of the time and place of the planned scoping meetings will be provided to public officials and announced in the news media in the areas where the meetings will be held. Subsequently, after publication of the Draft EIS, public hearings will be held at the same locations as the scoping meetings.

For further information concerning the Peacekeeper Rail Garrison program and the EIS activities, contact Lt Col Peter Walsh, AFRCE-BMS/DEV, Norton AFB, California 92409-6448.

Patsy J. Conner,

Air Force Federal Register Liaison Officer.

[FR Doc. 88-4105 Filed 2-25-88; 8:45 am]

BILLING CODE 3910-01-M

Department of the Army

Record of Decision; Chemical Stockpile Disposal Program

AGENCY: Department of the Army, DoD.

ACTION: Availability of record of decision.

SUMMARY: This announces the availability of the Record of Decision regarding the Final Programmatic Environmental Impact Statement (FPEIS) for the Chemical Stockpile Disposal Program. The alternative selected as the Record of Decision is on-site destruction at each of the existing eight storage installations within the continental United States.

SUPPLEMENTARY INFORMATION: The Army has selected the on-site disposal alternative as the programmatic Record of Decision for all eight chemical storage sites to dispose of their stocks of chemical munitions and agents. As such, no agents or munitions from the stockpile will be transported to other storage installations or sites for destruction. The eight storage sites are: Aberdeen Proving Ground, Maryland; Anniston Army Depot, Alabama; Lexington-Blue Grass Army Depot, Kentucky; Newport Army Ammunition Plant, Indiana; Pine Bluff Arsenal, Arkansas; Pueblo Army Depot Activity, Colorado; Tooele Army Depot, Utah; and Umatilla Army Depot Activity, Oregon.

In accordance with the Council on Environmental Quality Regulations concerning tiering, the FPEIS was programmatic rather than site specific. The Chemical Stockpile Disposal Program is national in scope and involves a number of complex, interrelated actions. A site-specific National Environmental Policy Act (NEPA) review, which will include the preparation of an Environmental Impact Statement (EIS) or Environmental Assessment (EA), will be conducted for each of the eight chemical storage installations. In addition, the Army is obligated to obtain Resource, Conservation and Recovery Act (RCRA) and Clean Air Act permits from each of the affected status and the Environmental Protection Agency.

The decision to dispose of each stockpile at the installation where it is currently stored is driven by the overriding objective of the army to conduct the disposal program with maximum protection to the public and the environment. In the FPEIS, the following alternatives for destruction of the stockpile were evaluated: (1) At each existing storage installation (on-

site disposal); (2) at two regional destruction centers—Anniston Army Depot for the eastern storage installations and Tooele Army Depot for western storage installations (regional disposal); (3) at a national destruction center—Tooele Army Depot (national disposal); (4) continued storage (no-action alternative).

Also, in response to public comment, another alternative was assessed in the FPEIS, that of moving chemical agents and munitions stored at Aberdeen Proving Ground and Lexington-Blue Grass Army Depot by air to Tooele Army Depot for destruction (partial relocation). Air transport was unacceptable for the relocation of the stockpile of the two sites because it posed greater public health and safety risks than on-site disposal. Barge transportation of stocks from Aberdeen to Johnston Island was also proposed in public comment, but was deemed unsuitable because of the potential for adverse environmental impact on the ecologically sensitive Chesapeake Bay area.

The Record of Decision summarizes the selection of the on-site disposal alternative based on a comparative analysis of human health and environmental impacts, and the feasibility and effectiveness of emergency response measures. The analysis showed a clear advantage in terms of risk for on-site disposal from a national perspective. Also discussed in the Record of Decision is the selection of disassembled incineration as the disposal process to be used for the destruction of the chemical stockpile. Development of an alternative incineration method called "cryofracture" will continue as a backup process. However, this process was not selected because it would impose a significant delay in the program.

The Army is committed to working with local, state and federal officials to enhance off-site emergency preparedness. Site-specific emergency response plans will be developed in coordination with the local communities at each of the storage sites.

Interested individuals may obtain copies of the Record of Decision by contacting the Program Executive Officer-Program Manager for Chemical Demilitarization, ATTN: AMCPEO-CDI (Ms. Marilyn Tischbin), Aberdeen Proving Ground, Maryland 21010-5401, telephone (301) 671-2583.

Lewis D. Walker,

Deputy for Environment, Safety and Occupational Health, OASA (I&L).

[FR Doc. 88-4131 Filed 2-25-88; 8:45 am]

BILLING CODE 3710-08-M

DEPARTMENT OF EDUCATION

Agency Information Collection Activities Under OMB Review

AGENCY: Department of Education.

ACTION: Notice of proposed information collection requests.

SUMMARY: The Director, Information Technology Services, invites comments on the proposed information collection requests as required by the Paperwork Reduction Act of 1980.

DATES: Interested persons are invited to submit comments on or before March 28, 1988.

ADDRESSES: Written comments should be addressed to the Office of Information and Regulatory Affairs, Attention: Jim Houser, Desk Officer, Department of Education, Office of Management and Budget, 726 Jackson Place, NW., Room 3208, New Executive Office Building, Washington, DC 20503. Requests for copies of the proposed information collection requests should be addressed to Margaret B. Webster, Department of Education, 400 Maryland Avenue SW., Room 5624, Regional Office Building 3, Washington, DC 20202.

FOR FURTHER INFORMATION CONTACT: Margaret B. Webster, (202) 732-3915.

SUPPLEMENTARY INFORMATION: Section 3517 of the Paperwork Reduction Act of 1980 (44 U.S.C. Chapter 35) requires that the Office of Management and Budget (OMB) provide interested Federal agencies and the public an early opportunity to comment on information collection requests. OMB may amend or waive the requirement for public consultation to the extent that public participation in the approval process would defeat the purpose of the information collection, violate State or Federal law, or substantially interfere with any agency's ability to perform its statutory obligations.

The Director, Information Technology Services, publishes this notice containing proposed information collection requests prior to submission of these requests to OMB. Each proposed information collection, grouped by office, contains the following: (1) Type of review requested, e.g., new, revision, extension, existing or reinstatement; (2) Title; (3) Frequency of collection; (4) The affected public; (5) Reporting burden; and/or (6) Recordkeeping burden; and (7) Abstract. OMB invites public comment at the address specified above. Copies of the requests are available from Margaret Webster at the address specified above.

Dated: February 22, 1988.

Carlos U. Rice,

Director for Information Technology Services.

Office of Elementary and Secondary Education

Type of Review: New
Title: Stewart B. McKinney Homeless Assistance Program Reporting Requirements
Frequency: Annually
Affected Public: State or local governments
Reporting Burden:
Responses: 104
Burden Hours: 16,640
Recordkeeping:
Recordkeepers: 52
Burden Hours: 520
Abstract: State education agencies under the Stewart B. McKinney Homeless Assistance Act will submit interim and final reports to the Department. The Department uses the information to identify the numbers, locations and specific needs of homeless children and to prepare a report to Congress.

Office of Educational Research and Improvement

Type of Review: New
Title: Application for Star Schools Program
Frequency: Annually
Affected Public: State or local governments; businesses or other for-profit; and non-profit institutions
Reporting Burden:
Responses: 50
Burden Hours: 2,000
Recordkeeping:
Recordkeepers: 0
Burden Hours: 0
Abstract: This form will be used by a public agency or corporation to apply for funding under the Star Schools Program. The Department uses the information to make grant awards. Namm -Folios: 646-649 -Date: 2/24/88 -Subformat:

Office of Educational Research and Improvement

Type of Review: Extension
Title: Financial, Performance and Completion Reports for State-Administered Programs
Frequency: Annually
Affected Public: State or local governments
Reporting Burden:
Responses: 54
Burden Hours: 2160
Recordkeeping:
Recordkeepers: 54
Burden Hours: 54

Abstract: State library administrative agencies that have participated in programs under the Library Services and Construction Act, Title I, II and III, as amended, submit these reports to the Department. The Department uses the information to assess accomplishments of project goals and objectives and to obtain information relating to expenditures of funds.

Office of Postsecondary Education

Type of Review: Extension
Title: Institutional Payment Summary (IPS) and IPS Batch Report
Frequency: Quarterly
Affected Public: Businesses or other for-profit, non-profit institutions, small businesses or organizations
Reporting Burden:
Responses: 64,430
Burden Hours: 64,430
Recordkeeping:
Recordkeepers: 6,443
Burden Hours: 3,222
Abstract: The Higher Education community uses this form to report cumulative payment data for students eligible to receive a Pell Grant. The Department uses this information to determine adjustments to an institution's Pell Grant funding level and to monitor the disbursement of Federal dollars to eligible student applicants.

Office of Postsecondary Education

Type of Review: Revision
Title: Application for Institutional Eligibility and Certification
Frequency: On occasion
Affected Public: State and local governments; businesses or other for-profit; small businesses or organizations
Reporting Burden:
Responses: 4,800
Burden Hours: 14,400
Recordkeeping:
Recordkeepers: 0
Burden Hours: 0
Abstract: This form will be used by postsecondary institutions to apply for funding under the Higher Education Act of 1965, as amended. The Department uses the information to determine the eligibility and the administrative and financial capability of the institution for certification.

Office of Postsecondary Education

Type of Review: Revision
Title: Application and Fiscal Operations Report for Federal Student Financial Aid Programs
Frequency: Annually
Affected Public: State or local governments, non-profit institutions
Reporting Burden:
Responses: 5,300
Burden Hours: 180,905
Recordkeeping:
Recordkeepers: 424
Burden Hours: 5,300
Abstract: Institutions, under the Higher Education Act of 1965, as amended, are required to apply and submit a report to the Department for the Perkins Loan, the Supplemental Educational Opportunity Grant and the Colleage Work-Study Programs. The Department uses the information to determine funding allocations, and to assess program effectiveness, accountability of fund expenditures during the award period, and administrative capability of the applicant and for compliance enforcement.

Office of Postsecondary Education

Type of Review: Extension
Title: State Student Incentive Grant Peformance Report
Frequency: Annually
Affected Public: State or local governments
Reporting Burden:
Responses: 57
Burden Hours: 285
Recordkeeping:
Recordkeepers: 57
Burden Hours: 85.5
Abstract: Stage agencies that have participated in the State Student Incentive Grant Program submit this report to the Department. The Department uses the information to assess the accomplishments of the program goals and objectives, and to aid in effective program management.

Office of Vocational and Adult Education

Type of Review: Extension
Title: Reporting Requirements under the Carl D. Perkins Vocational Education Act of 1984
Frequency: Biennially
Affected Public: State and local governments
Reporting Burden:
Responses: 4,212
Burden Hours: 1,638,712
Recordkeeping:
Recordkeepers: 0
Burden Hours: 0
Abstract: States are required to report on organizations and local educational agencies that participate in the State-administered programs under the Carl D. Perkins Vocational Education Act of 1984, as amended. The Department uses the information to determine compliance with the Act and effectiveness of vocational education programs.

Office of Vocational and Adult Education

Type of Review: Extension
Title: Financial Status and Performance Report for Direct Grants
Frequency: Annually
Affected Public: State or local governments and non-profit institutions
Reporting Burden:
Responses: 150
Burden Hours: 1,200
Recordkeeping:
Recordkeepers: 0
Burden Hours: 0
Abstract: Grantees that have participated in the direct grant programs submit this report to the Department. The Department uses the information to assess the accomplishments of project goals and objectives and to aid in effective program management.

Office of Vocational and Adult Education

Type of Review: Extension
Title: State Plan for Adult Education
Frequency: Triennally
Affected Public: State and local governments
Reporting Burden:
Responses: 54
Burden Hours: 1,500
Recordkeeping:
Recordkeepers: 0
Burden Hours: 0
Abstract: State educational agencies must submit state plans to apply for grants under the Adult Education Act, as amended. The Department uses the information to ensure the proposed activities comply with the requirements of the Act and its implementing regulations.

[FR Doc. 88-4139 Filed 2-25-88; 8:45 am]
BILLING CODE 4000-01-M

[CFDA No. 84.162]

Notice Inviting Applications for New Awards Under the Emergency Immigrant Education Program for Fiscal Year 1988

Purpose: This program provides financial assistance to SEAs for educational services and costs for eligible immigrant children enrolled in elementary and secondary public and nonprofit private schools.

Deadline for Transmittal of Applications: April 22, 1988.

Deadline for Intergovernmental Review Comments: June 21, 1988.

Applications Available: Application packages may be obtained by writing to

the Office of Bilingual Education and Minority Languages Affairs, U.S. Department of Education, 400 Maryland Avenue SW., (Room 421, Reporters Building), Washington, DC 20202. The Office of Bilingual Education and Minority Languages Affairs will mail application forms and program information packages to all SEAs.

Available Funds: $28,722,000.

Project Period: 12 Months.

Programmatic Information: A State educational agency (SEA) may apply for a grant if it meets the eligibility requirements contained in 34 CFR 581.2. This program provides financial assistance to SEAs for educational services and costs for eligible immigrant children enrolled in elementary and secondary public and nonprofit private schools. To be eligible for a grant, an SEA must submit a count of eligible immigrant children conducted during the month of March, 1988.

Applicable Regulations: (a) The regulations governing the Emergency Immigrant Education Program in 34 CFR Part 581, and (b) the Education Department General Administrative Regulations (EDGAR) in 34 CFR Parts 74, 76, 77, 78, and 79.

For Applications or Information: For further information contact Jonathan Chang, Office of Bilingual Education and Minority Languages Affairs, U.S. Department of Education, 400 Maryland Avenue SW. (Room 421, Reporters Building), Washington DC 20202. Telephone: (202) 245-2609.

Program Authority: 20 U.S.C. 4101-4108.

(Catalog of Federal Domestic Assistance Number 84.162, Emergency Immigrant Education Program)

Dated: February 22, 1988.

William J. Bennett,

Secretary of Education.

[FR Doc. 88-4135 Filed 2-25-88; 8:45 am]

BILLING CODE 4000-01-M

[CFDA No.: 84.128G]

Notice Inviting Applications for New Awards Under the Handicapped Migratory Agricultural and Seasonal Farmworker Vocational Rehabilitation Service Projects Program for Fiscal Year 1988

Purpose: This program supports projects conducted by State or local vocational rehabilitation agencies that provide vocational rehabilitation services to migratory agricultural workers with handicaps or seasonal farmworkers with handicaps.

Deadline for Transmittal of Applications: May 16, 1988.

Deadline for Intergovernmental Review Comments: July 16, 1988.

Applications Available: March 15, 1988.

Available funds: $180,000.

Estimated Range of Awards: $80,000 to $100,000.

Estimated Average Size of Awards: $90,000.

Estimated Number of Awards: 2.

Project Period: Up to 36 months.

Applicable Regulations: (a) Regulations governing the Handicapped Migratory and Seasonal Farmworker Vocational Rehabilitation Service Projects Program, 34 CFR Parts 369 and 375, and (b) Education Department General Administative Regulations, 34 CFR Parts 74, 75, 77, 78, and 79.

For Applications or Information Contact: Frank S. Caracciolo, U.S. Department of Education, 400 Maryland Avenue SW., Room 3320 Switzer Building, MS 2312, Washington, DC 20202. Telephone: (202) 732-1340.

Program Authority: 29 U.S.C. 777(b).

Dated: February 23, 1988.

Madeleine Will,

Assistant Secretary for Special Education and Rehabilitative Services.

[FR Doc. 88-4142 Filed 2-25-88; 8:45 am]

BILLING CODE 4000-01-M

[CFDA: 84.146]

Notice Inviting Applications for New Awards Under the Transition Program for Refugee Children for Fiscal Year 1988

Purpose: Provides grants to SEAs to assist LEAs to provide supplemental educational services to meet the special needs of eligible refugee children.

Deadline for Transmittal of Application: April 22, 1988.

Applications Available: Application packages may be obtained by writing to the Office of Bilingual Education and Minority Languages Affairs, U.S. Department of Education, 400 Maryland Avenue, SW., (Room 421, Reporters Building), Washington, DC 20202. The Office of Bilingual Education and Minority Languages Affairs will mail application forms and program information packages to all SEAs.

Funds Available: $15,209,000.

Project Period: 12 months.

Programmatic Information: A State educational agency (SEA) may apply for a grant if it meets the eligibility requirements contained in 34 CFR 538.2. To be eligible for a grant, an SEA must submit a count of refugee children eligible for assistance under the Transition Program for Refugee Children conducted in the month of March, 1988.

A grant is made to an SEA based on the number of eligible children enrolled in public and nonprofit private schools in the State, using the weighting factors announced in this notice. Using the same formula, the SEA awards subgrants to local educational agencies (LEAs) in its State that propose to serve eligible children within their jurisdictions. As provided in 34 CFR 538.20. the SEA makes subgrants to LEAs within 60 days after the State receives the grant award funds. If the LEA does not apply to serve its eligible children, the SEA provides services directly to those children or arranges for provisions of services to those children through subgrants, contracts, or cooperative agreements with other public and private nonprofit organizations, agencies and institutions.

Awards under this program are to provide educational services to eligible children during the 1988-1989 school year.

Weighting factors: Section 538.31 of the program regulations authorizes the Secretary to announce the weighting factors to be used in distributing funds under this program. For the award of fiscal year 1988 funds, the secretary uses the following formula for distributing funds:

Recency of arrival in the United States (in years)	Weighting factors by school level	
	Elementary grade levels	Secondary grade levels
Less than 1 year	10	10
1 to 2 years	3	5
2 to 3 years	0	3
3 to 4 years	0	0
More than 4 years	0	0

Applicable Regulations: (a) The regulations governing the Transition Program for Refugee Children in 34 CFR Part 538, (b) Regulations governing the Refugee Resettlement Program in 45 CFR Part 400, and, to the extent provided in 34 CFR 538.3, (c) the Education Department Administrative Regulations (EDGAR) in 34 CFR Parts 74, 76, 77, and 78.

For Applications or Information Contact: Jonathan Chang, Office of Bilingual Education and Minority Languages Affairs, U.S. Department of Education, 400 Maryland Avenue, SW. (Room 421, Reporters Building), Washington, DC 20202. Telephone: (202) 245-2609.

Program Authority: 8 U.S.C. 1522.

(Catalog of Federal Domestic Assistance Number 84.146, Transition Program for Refugee Children)

Dated: February 22, 1988.

William J. Bennett,

Secretary of Education.

[FR Doc. 88-4136 Filed 2-25-88; 8:45 am]

BILLING CODE 4000-01-M

Office of Special Education and Rehabilitative Services

Arbitration Panel Decision Under the Randolph-Sheppard Act

AGENCY: Department of Education.

ACTION: Notice of Arbitration Panel Decision under the Randolph-Sheppard Act.

SUMMARY: Notice is hereby given that on August 7, 1985, an arbitration panel rendered a decision in the consolidated appeals of Abraham Brotman, Lillian Wyer, and Richard Kreamer, Vendors v. *State of Pennsyvania, Pennsylvania* Department of Public Welfare, State Licensing Agency (R-S/82-9). This panel was convened by the Secretary of Education pursuant to 20 U.S.C. 107d-1(a), upon receipt of complaints filed by petitioners Brotman, Wyer, and Kreamer. Under this section of the Act, a blind licensee who is dissatisfied with the State's operation or administration of the vending facility program may request a full evidentiary hearing from the State licensing agency. If the licensee is dissatisfied with the State agency decision, the licensee may complain to the Secretary, who is then required to convene an arbitration panel to resolve the dispute.

FOR FURTHER INFORMATION CONTACT: George F. Arsnow, Chief, Vending Facility Branch, Division for Blind and Visually Impaired, Rehabilitation Services Administration, Room 3230 Mary E. Switzer Building, Department of Education, 330 C Street SW., Washington, DC 20202, Area Code (202) 732-1317 or TTY (202) 732-1298. The full text of the arbitration panel decision can be obtained from this source.

Dated: February 23, 1988.

Madeleine Will,

Assistance Secretary for Special Edcuation and Rehabitative Services.

Arbitration Panel Decision

Petitioners Brotman, Wyer, and Kreamer contested the decision of the Pennsylvania Department of Public Welfare, Bureau of Blindness and Visual Services (the "State licensing agency"), to award vending facilities to Richard Shaner and Francis Dierfield, blind veterans of the Vietnam and Korean conflicts, respectively. The veterans were chosen from a training roster rather than from a promotion roster which contained more senior vendors, such as the petitioners. The State licensing agency (SLA) made the awards pursuant to a State law providing that Pennsylvania blind veterans will be given a first preference for vending stand locations within the Commonwealth.

The principal argument advanced by petitioners before the panel was that the State veterans preference law was inconsistent with, and therefore preempted by, the Randolph-Sheppard Act which does not expressly authorize SLAs to include such a preference as part of their transfer and promotion policies. Petitioners specifically alleged that Pennsylvania's law and practice violated 20 U.S.C. 107b-1(3), which requires participation of the State Committee of Blind Vendors in SLA development of a transfer and promotion system, and section 107a(a)(1) which obligates the Commissioner of the Rehabilitation Services Administration (RSA) to establish "requirements for the uniform application of [the Act] by each State agency * * *".

In pertinent part, the arbitration panel concluded that Pennsylvania's law did not conflict with the transfer and promotion provisions of the Randolph-Sheppard Act. The panel further concluded that absent a clear conflict with the Act or implementing regulations at 34 CFR Part 395, the Commissioner of RSA did not have the authority to override duly enacted State legislation regarding transfer and promotion in the interest of national uniformity. In reaching its decision, the panel gave "significant weight" to a December 20, 1983 letter from the Commissioner of RSA to the Panel Chairperson which took the position that Pennsylvania's veterans preference was not preempted by the Randolph-Sheppard Act.

For the above reasons, the Arbitration Panel denied Petitioners' requrest to nullify the awards to Shaner and Dierfield. However, the Arbitration Panel found some equitable merit in the claims of the Petitioners as (1) this was the first time that veterans preference had been requested and granted to individuals who had only completed training for vending stand proprietorship, and (2) the Commonwealth had not consulted with the elected Committee of Blind Vendors prior to granting the veterans preference requests of Messrs. Shaner and Dierfield. Therefore, the Arbitration Panel directed that Petitioners, Brotman, Wyer, and Kreamer be given a "one time" opportunity, within one (1) year from the date of the Panel's decision, to bid for and be awarded any vacancy in the Commonwealth which they desired and for which they qualified. This decision was based upon the peculair circumstances of the Petitioners' claims and was not intended to establish a precedent for future cases.

[FR Doc. 88-4141 Filed 2-25-88; 8:45 am]

BILLING CODE 4000-01-M

DEPARTMENT OF ENERGY

Federal Energy Regulatory Commission

[Docket Nos. ER88-256-000 et al.]

Union Electric Co. et al.; Electric Rate and Corporate Regulation Filings

Take notice that the following filings have been made with the Commission:

1. Union Electric Company

[Docket No. ER88-256-000]

February 22, 1988.

Take notice that on February 17, 1988, Union Electric Company (UE) tendered for filing Sixth Amendment & Sixth Revised Schedule II to the Interchange Agreement dated April 11, 1967 between Missouri Public Service Company (UtiliCorp) and Union Electric Company.

Said Agreements provide for the addition of Term Energy and inclusion of the rates therefor and extends the term of the Interchange Agreement.

UE requests that the filing be permitted to become effective October 1, 1987.

A Certificate of Concurrence has been filed by UtiliCorp United Inc., d/b/a Missouri Public Service in lieu of the filing of the Addendum specified.

Comment date: March 7, 1988, in accordance with Standard Paragraph E at the end of this document.

2. Vermont Electric Power Company, Inc.

[Docket No. ER88-255-000]

February 22, 1988.

Take notice that on February 17, 1988, Vermont Electric Power Company, Inc. (VELCO) tendered for filing a change in rate under FERC Rate Schedule No. 10 and FERC Rate Schedule No. 236.

VELCO states that these rate changes are provided for in Paragraph 5 of FERC Rate Schedule No. 10 and Article IV of FERC Rate Schedule No. 236.

VELCO further states that the percentage rate used in computing monthly charges changed from 19.72% to 20.43%.

VELCO requests that the effective date for the proposed change in rate by January 1, 1988.

Comment date: March 7, 1988, in accordance with Standard Paragraph E at the end of this notice.

3. Wisconsin Electric Power Company

[Docket No. ER88-250-000]

February 22, 1988.

Take notice that on February 16, 1988, Wisconsin Electric Power Company tendered for filing revisions to its wholesale rate schedules that provide for a new service option for all or portions of its wholesale customers' requirements. "Curtailable Service" provides the wholesale customer a billing credit in exchange for the company's right to request curtailment to a nominated level of load during periods in which power production costs are high. According to the company, the instant submittal satisfies the requirement of Article 4.3 of the settlement agreement reached between the company and its wholesale customers in Docket No. ER87-67-001. The filing also revises the terms and conditions of wholesale interruptible service.

Wisconsin Electric Power Company requests an effective date of March 1, 1988, for the proffered rate revisions.

Copies of the filing have been served on the company's wholesale customers, the Public Service Commission of Wisconsin, and the Michigan Public Service Commission.

Comment date: March 7, 1988, in accordance with Standard Paragraph E at the end of this notice.

4. Arizona Public Service Company

[Docket No. ER88-238-000]

February 22, 1988.

Take notice that on February 17, 1988, Arizona Public Service Company (APS) tendered for filing pursuant to § 35.1 of the Federal Energy Regulatory Commission's Regulations under the Federal Power Act, Southern California Edison Company's (Edison) Certificate of Concurrence to APS's rate schedule filing dated February 5, 1988 which included the Empire Landing Mutual Standby Transmission Service Agreement executed as of January 6, 1988, between APS and Edison.

A copy of this filing has been served upon all parties affected by this proceeding.

Comment date: March 7, 1988, in accordance with Standard Paragraph E at the end of this notice.

5. Arklahoma Corporation

[Docket No. EC88-11-000]

February 22, 1988.

Take notice that on February 16, 1988, Arklahoma Corporation (Arklahoma) tendered for filing in this docket an application for approval, pursuant to section 203(a) of the Federal Power Act and Part 33 of the Commission's regulations, of the sale by Arklahoma of approximately 28 miles of electric transmission line and an electric substation to Grand River Dam Authority.

Comment date: March 7, 1988, in accordance with Standard Paragraph E at the end of this notice.

6. Boston Edison Company

[Docket No. ER88-253-000]

February 22, 1988.

Take notice that on February 17, 1988, Boston Edison Company (Edison) tendered for filing an agreement for the sale of power to Central Maine Power Company (CMP) and an associated Exhibit A to Edison's non-firm transmission tariff, FERC Electric Tariff Original Vol. III. Pursuant to the power sales agreement on a monthly basis Edison will sell to CMP varying amounts of power, up to a maximum of 20 MW, from certain designated Edison jet turbine units.

Edison requests waiver of the Commission's notice requirements to permit the power sales agreement and the Exhibit A to become effective as of the commencement of the transaction, November 1, 1987.

Copies of the filing have been served upon CMP and on the Department of Public Utilities of the Commonwealth of Massachusetts.

Comment date: March 7, 1988, in accordance with Standard Paragraph E at the end of this document.

7. Dominion Resources, Inc.

[Docket No. EL88-11-000]

Take notice that on February 16, 1988, Dominion Resources, Inc. (DRI) tendered for filing a Petition for a Declaratory Order with respect to the proper interpretation of section 206 of the Commission's Regulations under the Public Utility Regulatory Policies Act of 1978 (PURPA) 18 CFR 292.206.

Comment date: March 7, 1988, in accordance with Standard Paragraph E at the end of this notice.

8. Iowa Power and Light Company

[Docket No. ER88-254-000]

February 22, 1988.

Take notice that on February 17, 1988, Iowa Power and Light Company, Des Moines, Iowa, (Iowa Power) tendered for filing a Notice of Termination of the Generation Services Agreement (GSA); and Special Agency Agreement (SAA) between Iowa Power and Union Electric Company, St. Louis, Missiouri (Union Electric), such notice dated February 10, 1988. The Notice reflects the termination of the GSA and SAA under which Iowa Power provided generation services to Union Electric. The GSA and SAA were effective as of March 18, 1987, was accepted for filing by the Commission on July 22, 1987, and was designated as Iowa Power and Light Company Rate Schedule FERC No. 71.

Iowa Power states a complete copy of the notice of termination filing has been mailed to Union Electric, the Iowa State Utilities Board, the Illinois Commerce Commission, and the Missouri Public Service Commission.

Iowa Power states the GSA provided that Iowa Power would convert coal purchased by Union Electric into electricity at the Council Bluffs generating stations near Council Bluffs, Iowa, and under the SAA Iowa Power would arrange for the transportation and delivery of Union Electric Coal to the Council Bluffs generating stations, both agreements being effective for the period March 18, 1987, to December 31, 1987. Therefore, the agreements have run their course.

Comment date: March 7, 1988, in accordance with Standard Paragraph E at the end of this notice.

9. Pacific Power & Light Company, an assumed business name of PacifiCorp

[Docket No. ER88-251-000

February 22, 1988.

Take notice that on February 16, 1988, Pacific Power & Light Company, an assumed business name of PacifiCorp tendered for filing, in accordance with § 35.12 of the Commission's Regulation's, the Transmission Interconnection and Capacity Exchange Agreement, Contract No. 87-LAO-298, between Pacific and the United States Department of Energy, Western Area Power Administration (Western).

Pacific requests waiver of the Commission's Notice requirements to permit this rate schedule to become effective July 17, 1987, this date being the date on which service commenced.

Copies of this filing were supplied to the Wyoming Public Service Commission and Western.

Comment date: March 7, 1988, in accordance with Standard Paragraph E at the end of this document.

10. Pennsylvania Power & Light Company

[Docket No. ER88-252-000]

February 22, 1988.

Take notice that on February 16, 1988, Pennsylvania Power & Light Company (PP&L) tendered for filing proposed changes in its Rate Schedule FERC Nos. 28, 32, 45, 50, 51, 54, 56, 57, 58, 63, 69, 70, 71, 79, 86, 88, 90, and 61 applicable to the Boroughs of Watsontown, Duncannon, Blakely, Weatherly, Schuylkill Haven, Perkasie, St. Clair, Catawissa, Ephrata, Lehighton, Hatfield, Mifflinburg, Quakertown, Kutztown, Olyphant, Lansdale, and to Sullivan County Rural Electric Cooperative, Inc. and Citizens' Electric Company of Lewisburg respectively. The proposed changes would decrease revenues from jurisdictional sales and service by $207,977 or 0.58%, based on the 12-month period ending June 30, 1987.

The proposed decrease is designed to reflect the reduction in the maximum Federal corporate income tax rate under the Tax Reform Act of 1986. The proposed effective date for the rate schedule changes is July 1, 1987.

Copies of the filing were served upon PP&L's jurisdictional customers named above and upon the Pennsylvania Public Utility Commission.

Comment date: March 7, 1988, in accordance with Standard Paragraph E at the end of this notice.

11. South Carolina Public Service Authority

[Docket No. ES88-29-000]

February 23, 1988.

Take notice that on February 12, 1988, the South Carolina Public Service Authority (Authority) filed an application seeking an order authorizing the issuance of up to $205 Million of Electric System Expansion Revenue Bonds, Refunding series. The Authority asks, in the alternative, an order dismissing the application for lack of jurisdiction. The bonds are to be sold at a competitive sale. The proceeds will be used to refund up to $170,535,000 outstanding Electric System Expansion Revenue Bonds.

Comment date: March 9, 1988, in accordance with Standard Paragraph E at the end of this notice.

12. Texas-New Mexico Power Company

[Docket No. ES88-30-000]

February 23, 1988.

Take notice that on February 16, 1988, Texas-New Mexico Power Company (Applicant) filed an application seeking an order pursuant to section 204 of the Federal Power Act, authorizing the issuance of not more than $80 million of short-term notes to be issued from time to time with a final maturity date of not late than April 1, 1990.

Comment date: March 10, 1988, in accordance with Standard Paragraph E at the end of this notice.

Standard Paragraph

E. Any person desiring to be heard or to protest said filing should file a motion to intervene or protest with the Federal Energy Regulatory Commission, 825 North Capitol Street NE., Washington, DC 20426, in accordance with Rules 211 and 214 of the Commission's rules of practice and procedure (18 CFR 385.211 and 385.214). All such motions or protests should be filed on or before the comment date. Protests will be considered by the Commission in determining the appropriate action to be taken, but will not serve to make protestants parties to the proceeding. Any person wishing to become a party must file a motion to intervene. Copies of this filing are on file with the Commission and are available for public inspection.

Lois D. Cashell,

Acting Secretary.

[FR Doc. 88-4156 Filed 2-25-88; 8:45 am]

BILLING CODE 6717-01-M

Revised Emergency Action Plan Guidelines

February 22, 1988.

Pursuant to the authority in § 12.22(a)(1) of the Commission's Regulations, the Director, Office of Hydropower Licensing, has revised the guidelines for the preparation of emergency action plans (EAP). The guidelines have been revised to facilitate the preparation, annual review and updating of EAP's to ensure their effectiveness and workability. The guidelines should be used in conjunction with the instructions contained in Part 12, Subpart C of the Commission Regulations.

All EAP's except for those at government dams, must comply with the format and criteria established in the revised guidelines. Therefore, all EAP's currently on file are to be revised, as necessary, by December 31, 1988, to comply with these guidelines.

Copies of the revised guidelines are available from the Director, Divison of Inspections or the Regional Director.

Lois D. Cashell,

Acting Secretary.

[FR Doc. 88-4075 Filed 2-25-88; 8:45 am]

BILLING CODE 6717-01-M

[Project Nos. 8073-004 et al.]

Hydroelectric Applications (RedArk Development Authority et al.); Applications Filed With the Commission

Take notice that the following hydroelectric applications have been filed with the Federal Energy Regulatory Commission and are available for public inspection:

1 a. *Type of Application:* Minor License.

b. *Project No.:* 8073-004.

c. *Date Filed:* June 17, 1987.

d. *Applicant:* RedArk Development Authority.

e. *Name of Project:* Sardis Dam Water Power Project.

f. *Location:* On Jackfork Creek in Pushmataha County, Oklahoma.

g. *Filed Pursuant to:* Federal Power Act, 16, U.S.C. 791(a)-825(r).

h. *Contact Person:* Mr. Harvey Bollinger, RedArk Development Authority, First National Center, Suite 103, P.O. Box 1650, McAlester, Oklahoma 74502 (918) 426-1879.

i. *FERC Contact:* Nanzo T. Coley, (202) 376-9416.

j. *Comment Date:* April 11, 1988.

k. *Description of Project:* The applicant proposes to develop a hydroelectric project at the existing U.S. Army Corps of Engineers' dam. The proposed project would consist of: (1) Installing two proposed generating units rated at 530 kW each in the wetwell of the existing Corps' flood control conduit intake tower; (2) proposed transmission lines connecting to the existing Kiamichi Electric Cooperative, Inc's distribution feeder; and (3) appurtenant facilities. The estimated average annual energy output is 4,496,000 kWh.

l. *Purpose of Project:* Energy produced at the project would be sold to Kiamichi Electric Cooperative, Inc.

m. This notice also consists of the following standard paragraphs: A3, A9, B, C, & D1.

2 a. *Type of Application:* Transfer of License.

b. *Project No.:* P-9028-003.

c. *Date filed:* December 10, 1987.

d. *Applicant:* Halifax County, Virginia, Synergics, Inc., and Banister Hydro Associates (Transferors) and Banister Hydro, Inc. (Transferee).

e. *Name of Project:* Halifax Hydropower Project.

f. *Location:* On the Banister River in Halifax County, Virginia.

g. *Filed Pursuant to:* Federal Power Act 16 U.S.C. 791 a-825(r).

h. *Applicant Contact:* Mr. Wayne L. Rodgers, 410 Severn Ave., Suite 313, Annapolis, MD 21403, (301) 268–8820.

i. *FERC Contact:* Eddie Lee, (202) 376–9828.

j. *Comment Date:* March 21, 1988.

k. *Description of Application:* On August 27, 1986, a license was issued to the Transferors for the Halifax Hydropower Project No. 9028. The Transferors intend to sell and transfer all interests to the Transferee. For that reason, the two parties have filed a request for transfer of license.

l. This notice also consists of the following standard paragraphs: B, C.

3 a. *Type of Application:* Preliminary Permit.

b. *Project No.:* 10491–000.

c. *Date filed:* November 17, 1987.

d. *Applicant:* AC Generating, Inc.

e. *Name of Project:* Clayville Waterpower.

f. *Location:* Sauguoit Creek, Oneida County, New York.

g. *Filed Pursuant to:* Federal Power Act, 16 U.S.C. 791(a)–825(r).

h. *Applicant Contact:* Happy J. Acee, AC Generating, Inc., P.O. Box 484, New Hartford, NY 13413, (315) 859–0772.

i. *FERC Contact:* Dawna Leitzke, (202) 376–9820.

j. *Comment Date:* April 11, 1988.

k. *Description of Project:* The proposed project would consist of: (1) An existing dam which is a concrete structure with a water flow width of 25 feet, an overall width of 80 feet, an overall depth of approximately 46 feet and a base to crest height of 24 feet; (2) an existing reservoir of (0') zero normal surface area, (0') zero normal storage capacity according to New York State D.E.C. data. The maximum normal surface elevation of the reservoir (stream at dam crest) is approximately 976 feet m.s.l.; (3) a new conduit type penstock of steel construction 28 inches in diameter and approximately 50 feet in length; (4) a new water intake of concrete construction and approximate envelope dimensions of 6 feet width, 10 feet length and 4 feet in height; (5) a new powerhouse of concrete construction and outside dimensions of 10 feet by 10 feet by 12 feet height and having an estimated average annual energy output of 350,000 kWh and an installed capacity of 55 kW under a head of 25 feet; (6) an open channel tailrace of concrete construction and approximate envelope dimensions of 6 feet width, 20 feet length, and 4 feet height; and (7) a new power transmission line (proposed) of 4,800 volts and approximately 250 feet in length. This line will be connected to the existing Niagara Mohawk Power Corporation power transmission line. The existing dam is owned by the Village of Clayville, Oneida County, New York. The applicant estimated that the cost of the studies under the permit would be $5,000.00.

l. *Purpose of Project:* Project power would be sold to Niagara Mohawk Power Corporation.

m. This notice also consists of the following standard paragraphs: A5, A7, A9, A10, B, C, and D2.

4 a. *Type of Application:* Preliminary Permit.

b. *Project No.:* 10520–000.

c. *Date Filed:* December 1, 1987.

d. *Applicant:* Hobo Hydropower Partnership.

e. *Name of Project:* Hobo Diversion Water Power Project.

f. *Location:* On Kern River and Mill Creek, a tributary of Kern River, near the town of Bakersfield, within the Sequoia National Forest, in Kern County, California.

g. *Filed Pursuant to:* Federal Power Act, 16 U.S.C. 791(a)–825(r).

h. *Applicant Contact:* Mr. K. Thomas Miller, Fluid Energy Systems, Inc., 2210 Wilshire Blvd., #699, Santa Monica, CA 90403, (213) 450–9861.

i. *FERC Contact:* Mr. Ahmad Mushtaq, (202) 376–1900.

j. *Comment Date:* April 13, 1988.

k. *Description of Project:* The proposed project would consist of: (1) A 27-foot-high, 250-foot-long dam on the Kern River creating a reservoir with a gross storage capacity of 88 acre-feet and surface area of 13 acres at elevation 2,265 feet m.s.l.; (2) a 28,100-foot-long, 14-foot-diameter diversion tunnel; (3) a 200-foot-high, 900-foot-long dam on Mill Creek, with a gross storage capacity of 2,200-acre-feet and surface area of 20 acres at elevation 2,266 feet m.s.l.; (4) a 80-foot-high, 14-foot-diameter intake tower shaft; (5) a 17,700-foot-long, 14-foot-diameter penstock; (6) a powerhouse to contain two generating units with a total installed capacity of 44 MW operating under a head of 357 feet; (7) a 70-foot-high, 220-foot-long reregulating dam downstream of the powerhouse creating a reservoir capacity of 930-acre-feet and surface area of 75 acres at elevation 1,940 feet m.s.l.; and (8) a 12-mile long, 12-kVA existing Southern California Edison (SCE) transmission line to be upgraded. The applicant estimated average annual energy generation of 179.1 GWh will be sold to SCE.

l. This notice also consists of the following standard paragraphs: A5, A7, A9, A10, B, C and D2.

5 a. *Type of Application:* Preliminary Permit.

b. *Project No.:* 10530–000.

c. *Date Filed:* December 23, 1987.

d. *Applicant:* Asotin Hydro Company, Inc.

e. *Name of Project:* Lower Asotin.

f. *Location:* On the Snake River in T7 and 8N, R46 and 47E and T10N, R46E Idaho and T32N, R5W Washington, near Asotin, Washington, in Asotin County, Washington, and Nez Perce County, Idaho.

g. *Filed Pursuant to:* Federal Power Act, 16 U.S.C. 791(a)–825(r).

h. *Applicant Contact:* Mr. Jason James, Two Greenwich Plaza, Greenwich, CT 06830, (203) 661–4203.

i. *FERC Contact:* Ms. Julie Bernt, (202) 376–9812.

j. *Comment Date:* April 11, 1988.

k. *Description of Project:* The proposed project would consist of: (1) A 200-foot-high, zoned fill dam at elevation 868 feet MSL; (2) an ogee-shaped, 370-foot-long spillway having six radial gates at elevation 792.5 feet MSL; (3) a reservoir with a normal pool elevation of 842.5 feet MSL, a surface area of 3,900 acres, a gross storage capacity of 200,000 acre-feet and a negligible live storage capacity; (4) a powerhouse-integral intake structure located in the river along the axis of the dam with the integral intake structure forming the upstream water retaining wall of the powerhouse which will contain six generating units each with a rated capacity of 50 MW; and (5) a 1.5-mile-long transmission line. Applicant estimates the average annual energy production to be 1.5 GWh and the cost of the work to be performed under the preliminary permit to be $1,500,000.

l. *Purpose of Project:* The power produced is to be sold to the local power company.

m. This notice also consists of the following standard paragraphs: A5, A7, A9, A10, B, C and D2.

6 a. *Type of Application:* Preliminary Permit.

b. *Project No.:* 10531–000.

c. *Date Filed:* December 23, 1987.

d. *Applicant:* Asotin Hydro Company, Inc.

e. *Name of Project:* Upper Asotin.

f. *Location:* On the Snake River in T31 and 32N, R4 and 5W Idaho, T6 and 7N, R47E Washington, and T6N, R47E Oregon, near Asotin, Washington, in Asotin County, Washington, Nez Perce County, Idaho, and Wallowa County, Oregon.

g. *Filed Pursuant to:* Federal Power Act, 16 U.S.C. 791(a)–825(r).

h. *Applicant Contact:* Mr. Jason James, Two Greenwich Plaza, Greenwich, CT 06830, (203) 661–4203.

i. *FERC Contact:* Ms. Julie Bernt, (202) 376–9812.

j. *Comment Date:* April 11, 1988.

k. *Description of Project:* The proposed project would consist of: (1) A 60-foot-high gravity dam at elevation 880 feet MSL; (2) an ogee-shaped, 525-foot-long spillway having nine radial gates at elevation 850 feet MSL; (3) a reservoir with a normal pool elevation of 870 feet MSL, a surface area of 600 acres, a gross storage capacity of 15,000 acre-feet and a negligible live storage capcity; (4) a powerhouse-integral intake structure located in the river along the axis of the dam with the integral intake structure forming the upstream water retaining wall of the powerhouse which will contain four generating units each with a rated capacity of 18.5 MW; and (5) a 9-mile-long transmission line. Applicant estimates the average annual energy production to be 3.5 GWh and the cost of the work to be performed under the preliminary permit to be $800,000.

l. *Purpose of Project:* The power produced is to be sold to the local power company.

m. This notice also consists of the following standard paragraphs: A5, A7, A9, A10, B, C and D2.

7 a. *Type of Application:* Amendment of License.

b. *Project No.:* 2370–020

c. *Date Filed:* December 29, 1987

d. *Applicant:* Pennsylvania Electric Company

e. *Name of Project:* Deep Creek Project.

f. *Location:* On Deep Crek near the Village of Oakland, Garrett County, Maryland.

g. *Filed Pursuant to:* Federal Power Act, 16 U.S.C. 791(a)–825(r).

h. *Applicant Contact:* Mr. William J. Madden, Jr., Bishop, Cook, Purcell, & Reynolds, 1200 17th Street, NW., Washington, DC 20036, (202) 857–9815.

i. *FERC Contact:* Michael Dees, (202) 376–9830.

j. *Comment Date:* April 1, 1988.

k. *Description of Project:* The proposed amendment to Pennsylvania Electric Company's existing licensed Project No. 2370 would consist of authorization to issue boat docking permits in excess of the number for which the licensee is authorized by article 35 of its license for the Deep Creek Project. Authority to issue the following boat dock permits at the Glenfield development has been requested: Six U shaped docks accommodating a total of 12 boats, five individual slips, and two docks accommodating a total of 16 and 8 boats respectively.

l. This notice also consists of the following standard paragraphs: B, C, and D2.

8 a. *Type of Application:* Minor License.

b. *Project No.:* 10441–000

c. *Date Filed:* July 9, 1987

d. *Applicant:* City of Aspen

e. *Name of Project:* Maroon Creek.

f. *Location:* On Maroon Creek in Pitkin County, Colorado.

g. *Filed Pursuant to:* Federal Power Act, 16 U.S.C. 791(a)–825(r).

h. *Applicant Contact:* Ronald L. Mitchell, Assistant City Manager, City of Aspen, 130 South Galena Street, Aspen, CO 81611 (303) 925–2020.

i. *FERC Contact:* Hector M. Perez, (202) 376–1669.

j. *Comment Date:* April 20, 1988.

k. *Description of Project:* The proposed run-of-river project would consist of: (1) An existing 8-foot-high, 40-foot-long reinforced concrete dam with a crest elevation of 8,233.5 feet; (2) a small impoundment; (3) an existing intake structure at the dam; (4) an existing 39-inch-diameter, 5,380-foot-long buried reinforced concrete penstock section leading to; (5) an existing 27-inch-diamater, 3,000-foot-long buried reinforced concrete penstock leading to; (6) a new 27-inch-diameter, 100-foot-long buried steel penstock; (7) a new powerhouse with one 450-kW turbine-generator unit; (8) a new 200-foot-long trapezoid open channel tailrace returning the water to Maroon Creek; (9) a new 400-foot-long, 14.4–kV transmission line; and (10) other appurtenances.

l. *Purpose of Project:* Generate power for municipal uses.

m. This notice also consists of the following standard paragraphs: A3, A9, B, C, and D1.

9 a. *Type of Application:* Amendment of License.

b. *Project No.:* 8051–003

c. *Date Filed:* December 21, 1987

d. *Applicant:* Summit Hydropower

e. *Name of Project:* Willimantic No. 1.

f. *Location:* On Willimantic River, Windham Co., Connecticut.

g. *Filed Pursuant to:* Federal Power Act, 16 U.S.C. 791(a)–825(r).

h. *Applicant Contact:* Richard G. Mackowiak, Summit Hydropower, P.O. Box 122, Putnam, CT 06260, (203) 928–2002.

i. *FERC Contact:* William Guey-Lee, (202) 376–9827.

j. *Comment Date:* March 18, 1988.

k. *Description of Project:* The project as licensed consisted of an existing dam, reservoir, and powerhouse with a rated capacity of 617 kW. The licensee requests that it be authorized to install a 700-kW generating unit and to lower the tailwater elevation by 2 feet to 158.3 feet msl.

l. This notice also consists of the following standard paragraphs: B, C and D2.

10 a. *Type of Application:* Exemption (less than 5 MW).

b. *Project No.:* 9974–001.

c. *Date Filed:* November 3, 1987.

d. *Applicant:* Rough and Ready Hydro Company.

e. *Name of Project:* Upper Watertown.

f. *Location:* Rock River, Jefferson County, Wisconsin.

g. *Filed Pursuant to:* Energy Security Act of 1980, Section 408, 16 U.S.C. 2705 and 2709.

h. *Applicant Contact:* Ms. Elaine R. Hitchcock, 423 Green Tree Road, Kohler, WI 53044, (414) 452–2624.

i. *FERC Contact:* Dean Wight, (202) 376–9821.

j. *Comment Date:* April 7, 1988.

k. *Description of Project:* The proposed project would consist of (1) an existing reinforced concrete dam 396 feet long, 17 feet high, and incorporating an uncontrolled spillway, sluice gates, stoplogs, and two turbine forebays; (2) an existing reservoir of 64 acres surface area and 550 acre-feet volume at a normal maximum surface elevation of 821 feet msl; (3) an existing four-story masonry powerhouse 74 feet long and 38 feet wide housing two turbine-generators of 300 kW combined capacity, to be refurbished; (4) an existing 8.3–kV transmission line 120 feet long; and (5) appurtenant facilities. The estimated annual energy production is 0.7 GWh. The net hydraulic head is 12 feet. Project power would be sold.

l. This notice also consists of the following standard paragraphs: A3, A9, B, C, and D3a.

11 a. *Type of Application:* Preliminary Permit.

b. *Project No.:* 10395–000.

c. *Date Filed:* April 21, 1987.

d. *Applicants:* City of Augusta, Kentucky.

e. *Name of Project:* Meldahl Hydroelectric Facility.

f. *Location:* Ohio River in Bracken County, Kentucky.

g. *Filed Pursuant to:* Federal Power Act, 16 U.S.C. 791(a)–825(r).

h. *Applicant Contact:* Louis Rosenman, Esq., 1333 New Hampshire Avenue, NW., Suite 1100, Washington, DC 20036, (202) 457–7500.

i. *FERC Contact:* Peter K. Lyse, (202) 376–9479.

j. *Comment Date:* April 25, 1988.

k. *Description of Project:* The proposed project would utilize the existing U.S. Army Corps of Engineers' Captain Anthony Meldahl Locks and Dam, and would consist of: (1) A proposed forebay and intake facility; (2) a proposed powerhouse containing three generating units with a total capacity of 80 MW; (3) a tailrace; (4) a proposed

138-kV transmission line, approximately 4 miles in length; and (5) appurtenant facilities. The estimated average annual generation is 400 GWh. The applicant expects to sell the project power to East Kentucky Power Cooperative, Inc. The approximate cost of the studies under the permit would be $300,000.

l. This notice also consists of the following standard paragraphs: A5, A7, A9, A10, B, C, and D2.

A3. Development Application—Any qualified development applicant desiring to file a competing application must submit to the Commission, on or before the specified comment date for the particular application, a competing development application, or a notice of intent to file such an application. Submission of a timely notice of intent allows an interested person to file the competing development application no later than 120 days after the specified comment date for the particular application. Applications for preliminary permit will not be accepted in response to this notice.

A4. Development Application—Public notice of the filing of the initial development application, which has already been given, established the due date for filing competing applications or notices of intent. In accordance with the Commission's regulations, any competing development applications, must be filed in response to and in compliance with public notice of the initial development application. No competing applications or notices of intent may be filed in response to this notice.

A5. Preliminary Permit—Anyone desiring to file a competing application for preliminary permit for a proposed project must submit the competing application itself, or a notice of intent to file such an application, to the Commission on or before the specified comment date for the particular application (see 18 CFR 4.36 (1985)). Submission of a timely notice of intent allows an interested person to file the competing preliminary permit application no later than 30 days after the specified comment date for the particular application.

A competing preliminary permit application must conform with 18 CFR 4.30(b)(1) and (9) and 4.36.

A7. Preliminary Permit—Any qualified development applicant desiring to file a competing development application must submit to the Commission, on or before the specified comment date for the particular application, either a competing development application or a notice of intent to file such an application. Submission of a timely notice of intent to file a development application allows an interested person to file the competing application no later than 120 days after the specified comment date for the particular application.

A competing license application must conform with 18 CFR 4.30(b)(1) and (9) and 4.36.

A8. Preliminary Permit—Public notice of the filing of the initial preliminary permit application, which has already been given, established the due date for filing competing preliminary permit and development applications or notices of intent. Any competing preliminary permit or development application, or notice of intent to file a competing preliminary permit or development application, must be filed in response to and in compliance with the public notice of the initial preliminary permit application. No competing applications or notices of intent to file competing applications may be filed in response to this notice.

A competing license application must conform with 18 CFR 4.30(b) (1) and (9) and 4.36.

A9. Notice of Intent—A notice of intent must specify the exact name, business address, and telephone number of the prospective applicant, include an unequivocal statement of intent to submit, if such an application may be filed, either (1) a preliminary permit application or (2) a development application (specify which type of application), and be served on the applicant(s) named in this public notice.

A10. Proposed Scope of Studies Under Permit—A preliminary permit, if issued, does not authorize construction. The term of the proposed preliminary permit would be 36 months. The work proposed under the preliminary permit would include economic analysis, preparation of preliminary engineering plans, and a study of environmental impacts. Based on the results of these studies the Applicant would decide whether to proceed with the preparation of a development application to construct and operate the project.

B. Comments, Protests, or Motions to Intervene—Anyone may submit comments, a protest, or a motion to intervene in accordance with the requirements of the Rules of Practice and Procedure, 18 CFR 385.210, 385.211, 385.214. In determing the appropriate action to take, the Commission will consider all protests or other comments filed, but only those who file a motion to intervene in accordance with the Commission's Rules may become a party to the proceeding. Any comments, protests, or motions to intervene must be received on or before the specified comment date for the particular application.

C. Filing and Service of Responsive Documents—Any filings must bear in all capital letters the title "COMMENTS", "NOTICE OF INTENT TO FILE COMPETING APPLICATION", "COMPETING APPLICATION", "PROTEST" or "MOTION TO INTERVENE", as applicable, and the Project Number of the particular application to which the filing is in response. Any of the above named documents must be filed by providing the original and the number of copies required by the Commission's regulations to: Secretary, Federal Energy Regulatory Commission, 825 North Capitol Street, NE., Washington, DC 20426. An additional copy must be sent to: Edward Abrams, Acting Director, Division of Project Management, Federal Energy Regulatory Commission, Room 203-RB, at the above address. A copy of any notice of intent, competing application or motion to intervene must also be served upon each representative of the Applicant specified in the particular application.

D1. Agency Comments—States, agencies established pursuant to federal law that have the authority to prepare a comprehensive plan for improving, developing, and conserving a waterway affected by the project, Federal and state agencies exercising administration over fish and wildlife, flood control, navigation, irrigation, recreation, cultural and other relevant resources of the state in which the project is located, and affected Indian tribes are requested to provide comments and recommendations for terms and conditions pursuant to the Federal Power Act as amended by the Electric Consumers Protection Act of 1986, the Fish and Wildlife Coordination Act, the Endangered Species Act, the National Historic Preservation Act, the Historical and Archeological Preservation Act, the National Environmental Policy Act, Pub. L. 88-29, and other applicable statutes. Recommended terms and conditions must be based on supporting technical data filed with the Commission along with the recommendations, in order to comply with the requirement in section 313(b) of the Federal Power Act, 16 U.S.C. 825*l*(b), that Commission findings as to facts must be supported by substantial evidence.

All other Federal, state, and local agencies that receive this notice through direct mailing from the Commission are requested to provide comments pursuant to the statutes listed above. No other formal requests will be made. Responses should be confined to substantive issues

relevant to the issuance of a license. A copy of the application may be obtained directly from the applicant. If an agency does not respond to the Commission within the time set for filing, it will be presumed to have no comments. One copy of an agency's response must also be set to the Applicant's representatives.

D2. Agency Comments.—Federal, State, and local agencies are invited to file comments on the described application. (A copy of the application may be obtained by agencies directly from the Applicant.) If an agency does not file comments within the time specified for filing comments, it will be presumed to have no comments. One copy of an agency's comments must also be sent to the Applicant's representatives.

D3a. Agency Comments—The U.S. Fish and Wildlife Service, the National Marine Fisheries Service, and the State Fish and Game agency(ies) are requested, for the purpose set forth in section 408 of the Energy Security Act of 1980, to file within 60 days from the date of issuance of this notice appropriate terms and conditions to protect any fish and wildlife resources or to otherwise carry out the provisions of the Fish and Wildlife Coordination Act. General comments concerning the project and its resources are requested however, specific terms and conditions to be included as a condition of exemption must be clearly identified in the agency letter. If an agency does not file terms and conditions within this time period, that agency will be presumed to have none. Other Federal, State, and local agencies are requested to provide any comments they may have in accordance with their duties and responsibilities. No other formal requests for comments will be made. Comments should be confined to substantive issues relevant to the granting of an exemption. If an agency does not file comments within 60 days from the date of issuance of this notice, it will be presumed to have no comments. One copy of an agency's comments must also be sent to the Applicant's representative.

D3b. Agency Comments—The U.S. Fish and Wildlife Service, the National Marine Fisheries Services, and the State Fish and Game agency(ies) are requested, for the purposes set forth in section 30 of the Federal Power Act, to file within 45 days from the date of issuance of this notice appropriate terms and conditions to protect any fish and wildlife resources or otherwise carry out the provisions of the Fish and Wildlife Coordination Act. General comments concerning the project and its resources are requested; however, specific terms and conditions to be included as a condition of exemption must be clearly identified in the agency letter. If an agency does not file terms and conditions within this time period, that agency will be presumed to have none. Other Federal, State, and local agencies are requested to provide comments they may have in accordance with their duties and responsibilities. No other formal requests for comments will be made. Comments should be confined to substantive issues relevant to the granting of an exemption. If an agency does not file comments within 45 days from the date of issuance of this notice, it will be presumed to have no comments. One copy of an agency's comments must also be sent to the Applicant's representatives.

Dated: February 23, 1988.

Lois D. Cashell,

Acting Secretary.

[FR Doc. 4157-Filed 2-25-88; 8:45 am]

BILLING CODE 6717-01-M

[Docket No. TA88-6-20-000]

Algonquin Gas Transmission Co.; Proposed Changes in FERC Gas Tariff

February 22, 1988.

Take Notice that Algonquin Gas Transmission Company ("Algonquin") on February 18, 1988, tendered for filing tariff sheet:

Twenty-fifth Revised Sheet No. 203

Algonquin states that such tariff sheet is being filed pursuant to section 7 of its Rate Schedule F-2, to reflect changes in the underlying rates by its pipeline suppliers, Consolidated Gas Transmission Corporation ("Consolidated").

Twenty-fifth Revised Sheet No. 203 is proposed to be effective March 1, 1988 to coincide with the proposed effective date of Consolidated's filing.

Algonquin notes that a copy of this filing is being served upon each affected party and interested state commissions.

Any person desiring to be heard or to protest said filing should file a motion to intervene or protest with the Federal Energy Regulatory Commission, 825 North Capitol Street NE., Washington, DC 20426, in accordance with Rules 211 and 214 of the Commission's Rules of Practice and Procedure (18 CFR 385.211, 385.214). All such motions or protests should be filed on or before February 29, 1988. Protests will be considered by the Commission in determining the appropriate action to be taken but will not serve to make protestants parties to the proceeding. Any person wishing to become a party must file a motion to intervene. Copies of this filing are on file with the Commission and are available for public inspection.

Lois Cashell,

Acting Secretary.

[FR Doc. 88-4077 Filed 2-25-88; 8:45 am]

BILLING CODE 6717-01-M

[Docket No. GP88-10-000]

The State of Connecticut and others,[1] Complainants, v. ANR Pipeline Co. and Others,[2] Respondents; Complaint and Motion for Order and Expedited Consideration

February 22, 1988.

Take notice that on January 29, 1988, pursuant to Rule 206 of the Commission's Rules of Practice and Procedure, the above-named complainants filed a complaint against the above-named respondents alleging that a certain of respondents' contracts for gas sales have been unjust and unreasonable within the meaning of section 5 of the Natural Gas Act (NGA)[3] since ate least November 1, 1985, which as the effective date of Order No. 436.[4] Complainants request that the Commission initiate an expedited proceeding to find certain of respondents' producer contracts to be in violation of section 5 of the NGA and to reform the contracts to provided just and reasonable terms from the effective date of Order 436.

The complainants allege the respondents have been purchasing and selling gas for ultimate consumption by consumers in their states and that the contracts governing these sales are

---

[1] Public Serivce Commission for the District of Columbia, Illinois Commerce Commission, Maryland Public Service Commission, Massachussets Department of Public Utilities, Michigan Public Service Commission, Montana Consumer Counsel, Montana Public Service Commission, New Jersey Board of Public Utilities, North Carolina Utilities Commission, Pennsylvania Public Utility Commission, South Dakota Public Utilities Commission, and Wisconsin Public Service Commission.

[2] Columbia Gas Transmission Corporation, Natural Gas Pipeline Company of America, Northern Natural Gas Company, Panhandle Eastern Pipe Line Company, Sea Robin Pipeline Company Southern Natural Gas Company, Tennessee Gas Pipeline Company, a Division of Tenneco Inc., Texas Gas Transmmission Company, Transcontinental Gas Pipe Line Corporation, Trunkline Gas Company, United Gas Pipe Line Company, and Williston Basin Interstate Pipeline Company.

[3] FERC Stat. & Regs. ¶ 30,665 (Oct. 9, 1985).

[4] Regulation of Natural Gas Pipelines after Partial Wellhead Decontrol, Order No. 436, [Reg. Preambles 1982-1985] FERC Stat. & Regs. ¶ 30,665 (Oct. 9, 1985).

within the scope of the Commission's jurisdiction under section 5 of the NGA since they are sales for resale in interstate commerce. The complainants contend that these contracts have been unjust and unreasonable within the meaning of section 5 of the NGA since at least November 1, 1985, the effective date of Order 436.

The complainants argue that the Court of Appeal's decision in *Associated Gas Distributors v. FERC*, 824 F.2d 981 (D.C. Cir. 1987) (*AGD v. FERC*) requires the Commission to take action to solve the take-or-pay problems caused by uneconomic producer/pipeline contracts. Complainants contend that the Commission has already found in essence that the producer/pipeline contacts are unjust and unreasonable and therefore that *AGD v. FERC* and other recent court decisions require that the Commission modify those contracts under section 5 of the NGA. The complainants, relying on *Office of Consumers Counsel, State of Ohio v. FERC*, 826 F.2d 1136 (D.C. Cir. 1987), further assert that once a section 5 violation has been found, immediate imposition of a remedy is mandatory. Complainant argue that therefore the Commission erred in failing to take action under section 5 in Order No. 436 and that the relief to be granted should put the parties back in the position in which they would have been had the error not occurred.

Consequently, complainants request that an expeditious determination be made that certain of respondents' contracts have been in violation of section 5 of the NGA since November 1, 1985. Complainant also request that the Commission remedy such contracts by specifying just and reasonable contract terms, and that the Commission order the enforcement of such terms prospectively from November 1, 1985.

Any person desiring to be heard or to protest this complainant should file a motion to intervene or a protest with the Federal Energy Regulatory Commission, 825 North Capitol Street NE., Washington, DC 20426, in accordance with Rules 214 and 211 of the Commission's Rules of Practice and Procedure (18 CFR 385.214 and 385.211 (1987)). All such motions or protests should be filed within thirty days of publication in the **Federal Register**. Protests will be considered by the Commission in determining the appropriate action to be taken, but will not serve to make protestants parties to the proceeding. Any person wishing to become a party must file a motion to intervene. Copies of this filing are on file with the Commission and are available for public inspection. Answers to the complaint shall be due within 30 days of publication in the **Federal Register**.

Lois D. Cashell,

Acting Secretary.

[FR Doc. 88-4074 Filed 2-25-88; 8:45 am]

BILLING CODE 6717-01-M

[Docket No. TA88-4-37-000]

Northwest Pipeline Corp.; Change in Sales Rates Pursuant to Purchased Gas Cost Adjustment Provision and Elimination of Incremental Pricing Provision

February 22, 1988.

Take notice that on February 16, 1988, Northwest Pipeline Corporation ("Northwest") submitted for filing a proposed change in rates applicable to service rendered under rate schedules affected by and subject to Article 16, Purchased Gas Cost Adjustment Provision ("PGA"), of its FERC Gas Tariff, First Revised Volume No. 1. Northwest states that such change in rates is for the purpose of reflecting changes in its estimated cost of purchased gas, and reflecting the change in unrecovered purchased gas costs since its PGA filing dated February 17, 1987.

The current PGA adjustment, for which notice is given herein, aggregates to an increase of .124¢ per therm in the commodity rate for all rate schedules, unless noted above, affected by the subject to the PGA. The demand rate remains unchanged, as reflected in Northwest's out-of-cycle PGA filed November 27, 1987 at Docket Nos. TA88-3-37-000 and RP88-36-000. The annual jurisdictional change in Northwest's rates is an increase of approximately $1,642,918. Northwest proposes to collect through its twelve-month surcharge, the adjusted balance of $17,502,124, which is the balance in FERC Account No. 191 as of December 31, 1987. The proposed rate changes have been reflected on First Amended Thirty-Ninth Revised Sheet No. 10.

Northwest also tendered for filing and acceptance the following tariff sheets:

First Revised Volume No. 1

Sixteenth Revised Sheet No. 10-B
First Revised Sheet No. 42
First Amended First Revised Sheet No. 100
Fifth Revised Sheet No. 122
Sixth Revised Sheet No. 123
Sixth Revised Sheet No. 124
Seventh Revised Sheet No. 125
Ninth Revised Sheet No. 126
Fourth Revised Sheet No. 126-A
Ninth Revised Sheet No. 127
Seventh Revised Sheet No. 127-A
Eighth Revised Sheet No. 128
Third Revised Sheet No. 128-A
Fourth Revised Sheet No. 129
Fourth Revised Sheet No. 130
Fourth Revised Sheet No. 131
Fifth Revised Sheet No. 132
Second Revised Sheet No. 133

Northwest states that the tariff sheets listed above are filed to remove the Incremental Pricing Provision from Northwest's tariff pursuant to Commission Order No. 478 issued on July 27, 1987. Northwest requests an effective date of April 1, 1988, for all tendered tariff sheets.

A copy of the filing has been mailed to all parties of record in Docket No. RP72-154-000, to all jurisdictional customers, and to affected state regulatory commissions.

Any persons desiring to be heard or protest said filing should file a motion to intervene or protest with the Federal Energy Regulatory Commission, 825 North Capitol Street NE., Washington, DC 20426, in accordance with Rules 211 or 214 of the Commission's Rules of Practice and Procedure. All such motions or protests should be filed on or before February 29, 1988. Protests will be considered by the Commission in determining the appropriate action to be taken, but will not serve to make protestants parties to the proceeding. Any person wishing to become a party must file a motion to intervene. Copies of this filing are on file with Commission and are available for public inspeciton.

Lois D. Cashell,

Acting Secretary.

[FR Doc. 88-4078 Filed 2-25-88; 8:45 am]

BILLING CODE 6717-01-M

[Docket Nos. RP82-55-034 and RP87-7-028]

Transcontinental Gas Pipe Line Corp.; Compliance Filing

February 22, 1988.

Take notice that on February 18, 1988, Transcontinental Gas Pipe Line Corporation (Transco) tendered for filing Second Substitute Fiftieth Revised Sheet No. 12 and Second Substitute Forty-sixth Revised Sheet No. 15 to its FERC Gas Tariff, Second Revised Volume No. 1.

Transco states that these tariff sheets revise the rates for Transco's G and OG Rate Schedules in Docket No. RP87-7-000 in order to comply with the terms of the Commission's order issued January 29, 1988 in this proceeding.

Transco requests that the Commission stay the requirement in Ordering

Paragraph (C) of the January 29, 1988 order which would otherwise require Transco to make refund to its G and OG customers within fifteen days of this date based on these tariff sheets. Transco states that good cause exists for such a stay, and a stay will not harm Transco's G and OG customers.

Transco states that copies of this filing will be mailed to its jurisdictional sales customers and interested state commissions.

Any person desiring to be heard or to protest said filing should file a motion to intervene or a protest with the Federal Energy Regulatory Commission, 825 North Capitol Street, NE., Washington, DC 20426 in accordance with Rules 214 and 211 of the Commission's Rules of Practice and Procedure (18 CFR 385.214, 385.211). All such motions or protests should be filed on or before February 29, 1988. Protests will be considered by the Commission in determining the appropriate action to be taken, but will not serve to make protestants parties to the proceeding. Any person wishing to become a party must file a motion to intervene. Copies of this filing are on file with the Commission and are available for public inspection.

Lois D. Cashell,

Acting Secretary.

[FR Doc. 88-4079 Filed 2-25-88; 8:45 am]

BILLING CODE 6717-01-M

[Docket No. RP88-60-000]

Transwestern Pipeline Co.; Filing

February 22, 1988.

Take notice that on February 12, 1988, Transwestern Pipeline Company (Transwestern), tendered for filing to become a part of Transwestern's F.E.R.C. Gas Tariff, Second Revised Volume No. 1 the following tariff sheets:

Original Sheet No. 6B
Original Sheet No. 88
Original Sheet No. 89
Original Sheet No. 90
Fifth Revised Sheet Nos. 91-104, superseding 4th Revised Sheet Nos. 88-104

Transwestern filed the above tariff sheets seeking authority to establish a mechanism to directly bill take-or-pay buyout and buydown payments to its rate schedule CDQ customers as a permanent provision to section 25 of its General Terms and Conditions. Transwestern states that the instant tariff sheets are being submitted concurrent with a Motion to Reopen and Supplement the Record in this proceeding. By Order issued September 28, 1987, the Commission affirmed the initial decision in this proceeding in rejecting Transwestern's proposal to implement a mechanism that would directly bill its CDQ-1 and CDQ-3 customers for their proportionate share of costs incurred by Transwestern in buying out or buying down take-or-pay liabilities. *Transwestern Pipeline Company,* 40 F.E.R.C. (CCH) ¶ 61,324 (1987), *reh'g denied,* 41, F.E.R.C. 61,235 (1987). Transwestern states that because the Commission's decision was grounded, in part, on the lack of record evidence of actually incurred and known take-or-pay buyout or buydown costs, Transwestern seeks in that Motion, without conceding the Commission's claim of inadequacy of evidence, to reopen the record for additional evidence to enable the Commission to evaluate the legal sustainability of its decision under the standards enunciated by the United States Supreme Court in *FPC* v. *Hope Natural Gas Co.,* 320 U.S. 591 (1944), as recently affirmed in *Jersey Central Power & Light Co.* v. *FERC,* 810 F.2d 1168 (D.C. Cir. 1987). Transwestern states that such additional evidence consists of dollar amounts representing take-or-pay buyout or buydown costs actually incurred by Transwestern following the close of the record in this proceeding.

Transwestern states that the absorption by it of as much as one-half of this settlement amount, as the Commission would require under its Order No. 500 policy as applied here, cannot be sustained under the *Hope* and *Jersey Central* standards.

Transwestern thus requests that the Commission accept the instant tariff sheets for filing, enabling Transwestern to place them into effect pending consideration of such additional evidence of take-or-pay buyout and buydown costs that Transwestern seeks to incorporate in this record through the concurrently filed Motion.

Transwestern requests a March 13, 1988, effective date for the above tariff sheets.

Any person desiring to be heard or to protest said filing should file a motion to intervene or a protest with the Federal Energy Regulatory Commission, 825 N. Capital Street NE., Washington, DC 20426, in accordance with the Commission's Rules of Practice and Procedure (18 CFR 385.211, and 385.214). All such motions or protests should be filed on or before February 29, 1988. Protests will be considered by the Commission in determining the appropriate action to be taken, but will not serve to make protestants parties to the proceeding. Any person wishing to become a party must file a motion to intervene.

Copies of this filing are on file with the Commission and are available for public inspection.

Lois D. Cashell,

Acting Secretary.

[FR Doc. 88-4158 Filed 2-25-88; 8:45 am]

BILLING CODE 6717-01-M

ENVIRONMENTAL PROTECTION AGENCY

[FRL 3334-5]

National Air Pollution Control Techniques Advisory Committee; Request for Suggestions for List of Candidates

AGENCY: Environmental Protection Agency (EPA).

ACTION: Notice of list of candidates.

SUMMARY: The EPA is preparing a list of candidates from which nominees will be selected for the National Air Pollution Control Techniques Advisory Committee (NAPCTAC). The EPA invites all interested persons to suggest qualified individuals whose names may be added to this list of candidates. The NAPCTAC was established to advise the Agency on the latest available technology and economic feasibility of alternative methods to prevent and control air pollution to be published in air quality control techniques documents. It also advises on information documents regarding air pollution control techniques and testing and monitoring methodology for categories of new sources and air pollutants subject to the provisions of section 111 and 112 of the Clean Air Act, as amended.

DATE: Submit suggestions for the list of candidates no later than March 28, 1988.

ADDRESS: Submit suggestions for the list candidates to: Jack R. Farmer Director, Emission Standards Division (MD-13), U.S. Environmental Protection Agency, Research Triangle Park, NC 27711.

FOR FURTHER INFORMATION CONTACT: Jack R. Farmer Director, Emission Standards Division (MD-13), U.S. Environmental Protection Agency, Research Triangle Park, NC 27711, (919) 541-5572.

SUPPLEMENTARY INFORMATION: The Charter for the NAPCTAC which describes the authority, organization, and functions of the Committee is available upon request. Individuals whose names are offered should have education or experience in the scientific, engineering, or economic aspects associated with the sources of air pollution and the control of emissions

from the sources. Individuals should be resident in universities, State and local governments, research institutions, public interest organizations, or industry.

Any interested person or organization may submit the names of qualified persons. Suggestions for the list of candidates should be identified by name, occupation, position, address and telephone number; a resume of the individual's background, experience, and qualifications should be included.

Persons selected for membership on the NAPCTAC will receive per diem compensation for travel and nominal daily compensation while attending meetings.

Suggestions for the list of candidates should be submitted no later than March 28, 1988. The Agency will not formally acknowledge or respond to suggestions.

Date: February 19, 1988.

J. Craig Potter,

Assistant Administrator for Air and Radiation.

[FR Doc. 88-4123 Filed 2-25-88; 8:45 am]

BILLING CODE 6560-50-M

[ER-FRL-3334-4]

Environmental Impact Statements and Regulations; Availability of EPA Comments

Availability of EPA comments prepared February 8, 1988 through February 12, 1988 pursuant to the Environmental Review Process (ERP), under section 309 of the Clean Air Act and section 102(2)(c) of the National Environmental Policy Act as amended. Requests for copies of EPA comments can be directed to the Office of Federal Activities at (202) 382-5075/76.

An explanation of the ratings assigned to draft environmental impact statements (EISs) was published in FR dated April 24, 1987 (52 FR 13749).

Draft EISs

ERP No. D-AFS-L65113-00, Rating EC2, Pacific Northwest Region, National Forest System Lands, Competing and Unwanted Vegetation Management Plan, Implementation, Oregon, Idaho, Washington, and California.

Summary: EPA believes that the air quality effects of prescribed burning at residences located immediately downwind of fires are unestimated.

Also, the reference alternative did not include quantification such that all of the alternatives could be adequately compared. Finally, the level of effort in evaluation of environmental risk from herbicide use should be made more comparable to the high quality effort that was done in evaluating human health effects.

ERP No. D-FHW-K40163-CA, Rating EC2, CA-238 Construction, near Industrial Parkway to CA-238/I-580 Interchange, Funding, and 404 Permit, City of Hayward, Alameda County, CA.

Summary: EPA expressed environmental concerns because of the project's potential to induce growth and vehicle trips which could worsen air quality problems in the San Francisco Bay area. EPA requested further information on the alternatives analysis and air quality problems, including the basis of several air quality assumptions which were used in the air quality analysis, as well as a commitment to fully mitigate air quality, noise, water quality, and riparian impacts.

Final EISs

ERP No. F-AFS-F65017-OH, Wayne National Forest, Land and Resource Management Plan, Implementation, Athens, Gallia, Hocking, Jackson, Lawrence, Monroe, Perry, Scioto, Vinton and Washington Counties, OH.

Summary: EPA continues to have concerns with potential adverse environmental impacts to water quality and wetlands from off-road vehicles use, road construction, and other forest activities. EPA requests that these impacts be addressed in the ROD, and that EPA have the opportunity to review upcoming specific projects requiring further environmental documentation.

ERP No. F1-BLM-K65063-NV, Esmeralda-Southern Nye Planning Area WSA's, Wilderness Recommendations, Designation or Nondesignation, Silver Peak Range, Pigeon Spring, Queer Mountain, Grapevine Mountains and Resting Spring WSAs', Nye and Esmeralda Counties, NV.

Summary EPA supports BLM's recommendation to add the Silver Peak Range wilderness study area to the National Wilderness System.

ERP No. F-USA-A21033-00, Continental United States Unitary Lethal Chemical Agents and Munitions Stockpile Disposal Program, Destruction and Implementation.

Summary: EPA believes the Army's analysis is adequate to support a decision among various alternatives, and EPA has no objection to the preferred alternative. EPA submitted a number of comments that are applicable to the program or for use in developing future documents for the specific sites.

Dated: February 23, 1988.

Richard E. Sanderson,

Director, Office of Federal Activities.

[FR Doc. 88-4217 Filed 2-25-88; 8:45 am]

BILLING CODE 65600-50-M

[ER-FRL-3334-3]

Environmental Impact Statements; Availability

Responsible Agency: Office of Federal Activities, General Information (202) 382-5073 or (202) 382-5075.

Availability of Environmental Impact Statements Filed February 15, 1988 Through February 19, 1988 Pursuant to 40 CFR 1506.9.

EIS No. 880042, Draft, FHW, AK, Glenn Highway Improvement, Village of Eklutna to Parks Highway, Funding and Section 404/10 Permit, Muncipality of Anchorage, Matanuska-Susitna Borough, AK, Due: April 21, 1988, Contact: Tom Neunaber (907) 586-7428.

EIS No. 880043, Draft, FHW, LA, Old Metairie Railroad Project, Railroad and Traffic Flow Conflicts Alleviation, Orleans Parish and Jefferson Parish Line to the Airline Highway and Causeway Boulevard Intersection, Funding, Jefferson County, LA, Due: April 29, 1988, Contact: Kenneth Perret (504) 389-0466.

EIS No. 880044, Final, EPA, OH, Cleveland Hilltop Facility Planning Area, Interceptor Sewer Project, Construction Grant, Cuyahoga and Lake Counties, OH, Due: March 28, 1988, Contact: Harlan D. Hirt (312) 353-2315.

EIS No. 880045, Final, FHW, GA, Mansell Road/GA-400 Interchange Extension, Mansell Road and Old Roswell Road Intersection to Old Alabama Road/Turner Road, Funding and 404 Permit, Fulton County, GA, Due: March 28, 1988, Contact: Louis Papet (404) 347-4751.

EIS No. 880046, Draft, FHW, CA, Twin Bridges Replacement across Chorro Creek, South Bay Boulevard, Funding and 404 Permit, City of Morro Bay, San Luis Obispo County, CA, Due: April 11, 1988, Contact: Glenn Clinton (916) 551-1310.

EIS No. 880047, Draft, MMS, ATL, ME, NH, MA, RI, CT, NY, NJ, 1989 North Atlantic Planning Area Outer Continental Shelf (OCS) Oil and Gas Sale No. 96, Lease Offerings, MA, NH, ME, RI, CT, NY and NJ, Due: April 11, 1988, Contact: Barry R. Clark (703) 285-2165.

EIS No. 880048, Draft, BLM, UT, Aptus Industrial and Hazardous Waste Treatment Facility Construction and Operation, Land Exchange, Right-of-Way Grants, Temporary Use Permits and Possible 404 Permit, Tooele County, UT, Due: April 26, 1988, Contact: Margaret Kelsey (801) 524-3128.

Amended Notices

EIS No. 880024, Draft, BLM, Phoenix Resource Area Management Plan, Implementation, Apache, Navajo, Gila, Maricopa, Pima, Pinal, Santa Cruz and Yavapai Counties, AZ, Due: April 29, 1988, Contact: Tim Sanders (602) 863-4464. Published FR 1-29-88—Review period extended.

EIS No. 880039, Draft, FHW, US 45 Bypass Construction around the City of New London, Funding and 404 permit, Outagamie County, WI, Due: April 11, 1988, Contact: R.W. Cooper (608) 264-5395. Publish FR 2-12-88—Review period reestablished.

EIS No. 880041, Draft, DOE, Special Isotope Separtion Production Plant Construction and Operation and the use of Atomic Vapor Laser Isotope Separation Technology, Site Selection and Implementation, Idaho National Engineering Laboratory near Idaho Falls, ID, Hanford Site near Richland, WA and Savannah River Plant near Aiken, SC, Due: April 21, 1988, Contact: Clay Nichol (208) 526-0306. Published FR 2-19-88—Incorrect due date and the Review period has been extended.

Dated: February 23, 1988.

Richard E. Sanderson,

Director, Office of Federal Activities.

[FR Doc. 88-4218 Filed 2-25-88; 8:45 am]

BILLING CODE 6560-50-M

[OPP-00256; FRL-3335-3]

Agricultural Chemicals in Ground Water; Proposed Pesticide Strategy; Availability of Documents and Request for Comment

AGENCY: Environmental Protection Agency (EPA).

ACTION: Notice of availability and request for comments.

SUMMARY: This notice announces the availability of the document "Agricultural Chemicals in Ground Water: EPA's Proposed Pesticide Strategy" (referred below as the "proposed strategy" or "strategy") and the Agency's request for public comment on the policies and approaches proposed by the document. The document is available from the EPA's Public Information Center. A second document, "Agricultural Chemicals in Ground Water: Summary Minutes from the 1987 Pesticide Strategy Workshop" (the "workshop summary") will be distributed with each copy of the proposed strategy.

DATE: Comments must be received by June 27, 1988, for EPA's consideration in the development of a final strategy for addressing the pesticides in ground-water concern.

ADDRESSES: The proposed strategy may be obtained from EPA's Public Information Center at the following address:

U.S. Environmental Protection Agency, Public Information Center (PM-211B), 401 M Street SW., Washington, DC 20460.

Written comments by mail to: Information Services Section, Program Management and Support Division (TS-757C), Environmental Protection Agency, 401 M Street SW., Washington, DC 20460.

In person bring comments to: Rm. 236, Crystal Mall #2, 1921 Jefferson Davis Highway, Arlington, VA.

FOR FURTHER INFORMATION CONTACT: Regional contacts listed in Table 1 or by mail:

Robert Barles, Office of Pesticide Programs (TS-766C), Environmental Protection Agency, 401 M Street SW., Washington, DC 20460.

In person: Rm. 1101B, Crystal Mall #2, 1921 Jefferson Davis Highway, Arlington, VA, (703-557-7102).

SUPPLEMENTARY INFORMATION: In 1986, EPA undertook the development of a strategy to address the increasing concern for pesticide contamination of ground-water resources. In the summer of 1986, EPA sponsored a workshop to discuss which issues should be addressed by the Agency's strategy. A wide range of pesticides and ground-water experts were invited to the workshop including Federal and State managers and staff, scientists, agricultural specialists, representatives of environmental groups and pesticide producers. Utilizing the extensive input received from the workshop, EPA began development of a draft proposed strategy. In the summer of 1987, EPA sponsored a second, larger workshop to review an early draft of the proposed strategy. The Agency has summarized the discussions held at this second workshop and will be distributing this document to the public along with the final version of the proposed strategy. The Agency believes that the perspectives and viewpoints express at the workshop will be as valuable to the reviewer of the proposed strategy as it has been to the Agency.

At this time, the Agency has developed a final version of the proposed strategy and is seeking wide public review and comment. The proposed strategy addresses three major issue areas: the Agency's goal in addressing this ground-water contamination concern; the management approach for preventing ground-water contamination; and the Agency's policy for responding to contamination that has already occurred. In addition to putting forth these proposed policies and management approaches, the document also contains a brief summary assessment of this ground-water contamination concern and a section describing key implementation issues and questions. EPA is seeking comments on all three parts of the document, including: the findings and assumptions of the summary problem assessment; the proposed policies and programs of the Agency's proposed strategy; and the implementation questions and issues raised by the Agency's proposed strategic approach.

Summarized below are the policies and management framework proposed by the strategy document. Also summarized are the key questions found in the document regarding both the conceptual and implementation issues of the proposed strategy. EPA is particularly interested in receiving public comment on these key issues.

1. *EPA's environmental goal is addressing the pesticides in ground-water concern.* As described in the proposed strategy, EPA's goal will be to manage pesticides to protect the groundwater resource. Specific attention will be given to preventing unacceptable contamination of current and potential drinking water supplies. The Agency will use Maximum Contaminant Levels (MCLs), the enforceable drinking water standards under the Safe Drinking Water Act, as reference points for helping to determine unacceptable levels of pesticides in underground sources of drinking water. When an MCL is not yet available for a particular pesticide, EPA will develop interim protection criteria for use as reference points for pesticides management decisions. These interim reference points will be based on EPA's standard toxicological assessment procedures. For pesticides that have carcinogenic potential, the interim reference points will be the level determined to pose a negligible risk. The Agency's defintion of a negligible risk for a carcinogen is that level in drinking water that poses a one in a million (10^{-6}) chance of cancer occurrence should an individual consume that water over a lifetime (70 years).

The Agency's rebuttable presumption will be that the risks posed by pesticides contamination of an underground source of drinking water, at or above and MCL or other reference point, will be more significant than the local benefits derived from the pesticide. Thus, under

the FIFRA mandate, such contamination would pose an unreasonable risk and measures will need to be taken to manage a pesticide's use of prevent such unacceptable levels of contamination including possible prohibitions of use. Furthermore, with its goal focused on prevention, the Agency expects that management measures will be triggered with early indications that a pesticide's use has the potential to reach unacceptable levels and that these measures will become more stringent should the likelihood increase.

The Agency is seeking comment on the appropriateness of its goal. Is prevention of unacceptable contamination an appropriate focus for the Agency? What factors should be considered when determining what levels of contamination are unacceptable? Is it appropriate to use reference points, as described in the strategy, to trigger pesticide management measures? Are the risk levels represented by these reference points appropriate for this purpose? Would a range of levels, coupled with other considerations such as the extent of exposures, be more appropriate reference points?

Should different levels of protection be afforded ground-water resources based on whether they are a current or potential drinking water source? Should protection of potential drinking water differ depending on the degree of likelihood of future use? What factors should be considered when assessing the potential for a ground-water resource to be a future drinking water supply?

2. *EPA's proposed prevention approach.* For prevention efforts, EPA's strategy envisions the possibility of national registrations of pesticides with EPA-directed statewide or countywide restricitons based on ground-water concerns. EPA will also establish ground-water protection measures that will be uniformly applicable across the country such as restricting the use of certain pesticides to trained and certified applicators. Still other EPA-directed management measures will be applicable only at sites with certain conditions (e.g., shallow water tables, location within wellhead protection areas).

While the above EPA-directed measures are possible, the proposed strategy describes the Agency's preferred management approach as being one that is directed by individual States. The proposed strategy provides to interested and qualified States the opportunity to take the lead role in furthering refining the Agency's analysis and designing and implementing a pesticide management plan that would tailor the conditions of pesticide use to specific local ground-water protection needs. If appropriate, a State could permit the use of certain pesticides in areas that under an EPA-directed management approach might not have been allowed. In such cases, EPA would modify the Federal registration to accommodate the State's plan.

The Agency is seeking specific comment on a number of issues raised with the strategy's proposed management framework for preventing unacceptable contamination of ground-water resources. Does the approach allow for a proper balance between national consistency in the environmental protection desired and flexibility for tailoring pesticide management to special local needs? What role should a State have in assessing and balancing pesticide risks and benefits when there are local ground-water concerns? Should a State have the responsibility for determining what ground-waters will receive what level of protection?

To what extent should EPA oversee a State's plan to manage pesticide use to protect its ground-water resources? Under what circumstances should EPA consider cancelling the use of a pesticide in a State even if that State has a plan to manage the pesticide?

To what extent should EPA and the States concentrate on plans to manage specific pesticides? Under what circumstances should a State undertake, and EPA accept, a generic plan for pesticides management in lieu of pesticide-specific plans?

Where a State chooses not to take the lead management role for a pesticide of ground-water contamination concern, should EPA establish one set of management measures for the entire State or should the Agency tailor measures for each country within the State? What type of EPA-directed measures should be considered for nationwide requirements?

3. *EPA proposed policy for response to contamination that has already occurred.* The Agency's proposed strategy for responding to pesticide contamination of ground-water emphasizes Federal-State coordination and statutory enforcement activities. Under its management plan, a State should have the capability to take necessary action to prevent further contamination when unacceptable levels are reported. A State should also take the lead in addressing immediate public health concerns. On a case-by-case basis, EPA may assist the States in short-term efforts to provide alternative water supplies where there are imminent human health threats. The proposed strategy calls for EPA and the States to place greater emphasis on coordinating FIFRA, SDWA, and CERCLA enforcement activities to identify parties responsible for ground-water contamination as a result of the misuse of pesticides, including illegal disposal or leaks and spills. The strategy suggests that either the U.S. Congress or individual State legislatures should address the question of responsibility for clean-up of ground-water contamination resulting from normal, registered use of a pesticide.

The Agency is also seeking public comment on a number of key questions concerning the issues of this section of the proposed strategy. What registration actions should EPA take when there is reported well contamination by a pesticide and the State does not have a management plan that will adequately address the problem? Should EPA consider not registering or reregistering pesticides in an entire State or county where contamination has occurred or should EPA consider site-specific usage bans only in the specific vicinity around the wells that have been contaminated?

Relative to EPA's proposed reference points (i.e., Maximum Contaminant Levels), what levels of contamination should be considered as posing imminent public health threats and the need for provisions of alternative water or treatment? Who should be responsible for addressing these threats pesticide contamination when the cause appears to be a result of normal, registered use of a pesticide? Should such sites be eligible for remedial actions or "clean-up" efforts by EPA under the Comprehensive Emergency Response Compensation and Liability Act (CERCLA or better known as "Superfund")?

TABLE 1.—EPA Regional Contacts

If you reside in	Please contact
Connecticut, Massachusetts, Maine, New Hampshire, Rhode Island, Vermont.	EPA Region 1—Office of Public Affairs, John F. Kennedy Federal Bldg, Room 2203, Boston, Massachusetts 02203. Contact: Chris Jendras, (617) 565-3421
New Jersey, New York, Puerto Rico, Virgin Islands.	EPA Region 2—Office of Ground Water Management, 26 Federal Plaza, New York, New York 10278. Contact: John Malleck, (212) 264-5634
Delaware, District of Columbia, Maryland, Pennsylvania, Virginia, West Virginia.	EPA Region 3—Toxics and Pesticides Branch, 841 Chestnut Street, Philadelphia, Pennsylvania 19107. Contact: Donald J. Lott, (215) 597-9870

TABLE 1.—EPA Regional Contacts—Continued

If you reside in	Please contact
Alabama, Florida, Georgia, Kentucky, Mississippi, North Carolina, South Carolina, Tennessee.	EPA Region 4—Public Affairs Branch, 345 Courtland Street, NE., Atlanta, Georgia 30365. Contact: Hagan Thompson, (404) 347-3004
Illinois, Indiana, Michigan, Minnesota, Ohio, Wisconsin.	EPA Region 5—Pesticides and Toxic Substances Branch, 230 Dearborn Street, Chicago, Illinois 60604. Contact: Sally Schiller, (312) 353-6353
Arkansas, Oklahoma, Louisiana, New Mexico, Texas.	EPA Region 6—Pesticides and Toxic Substances, 1445 Ross Avenue, 12th Floor, Suite 1200, Dallas, Texas 75202. Contact: Van Kozak, (214) 655-7239
Iowa, Kansas, Missouri, Nebraska.	EPA Region 7—Toxics and Pesticides Branch, 726 Minnesota Avenue, Kansas City, Kansas 66101. Contact: James MacDonald, (913) 236-2835
Colorado, Montana, North Dakota, South Dakota, Wyoming, Utah.	EPA Region 8—Toxic Substances Branch, Suite 500, 999 18th Street, Denver, Colorado 80202. Contact: Tim Osag, (303) 293-1741
Arizona, California, Hawaii, Nevada, American Samoa, Guam.	EPA Region 9—Pesticides and Toxic Substances Branch, 215 Fremont Street, San Francisco, California 94105. Contact: Nancy Andrews, (415) 974-7291
Alaska, Idaho, Oregon, Washington.	EPA Region 10—Pesticides and Toxic Substances Branch, 1200 Sixth Avenue, Seattle, Washington 98101. Contact: Garrett Wright, (206) 442-1495

Dated: February 22, 1988.

John A. Moore,

Assistant Administrator for Pesticides and Toxic Substances.

[FR Doc. 88-4124 Filed 2-25-88; 8:45 am]

BILLING CODE 6560-50-M

FEDERAL RESERVE SYSTEM

B/W Bancshares, Inc.; Formation of, Acquisition by, or Merger of Bank Holding Companies

The company listed in this notice has applied for the Board's approval under section 3 of the Bank Holding Company Act (12 U.S.C. 1842) and § 225.14 of the Board's Regulation Y (12 CFR 225.24) to become a bank holding company or to acquire a bank or bank holding company. The factors that are considered in acting on the applications are set forth in section 3(c) of the Act (12 U.S.C. 1842(c)).

The application is available for immediate inspection at the Federal Reserve Bank indicated. Once the application has been accepted for processing, it will also be available for inspection at the offices of the Board of Governors. Interested persons may express their views in writing to the Reserve Bank indicated for that application or to the offices of the Board of Governors. Any comment on an application that requests a hearing must include a statement of why a written presentation would not suffice in lieu of a hearing, identifying specifically any questions of fact that are in dispute and summarizing the evidence that would be presented at a hearing.

Comments regarding this application must be received not later than March 7, 1988.

A. **Federal Reserve Bank of Cleveland** (John J. Wixted, Jr., Vice President) 1455 East Sixth Street, Cleveland, Ohio 44101:

1. *B/W Bancshares, Inc.*, Lexington, Kentucky; to acquire 95 percent of the voting shares of Morehead National Bank, Morehead, Kentucky.

Board of Governors of the Federal Reserve System, February 24, 1988.

James McAfee,

Associate Secretary of the Board.

[FR Doc. 88-4276 Filed 2-25-88; 8:45 am]

BILLING CODE 6210-01-M

Bank Maryland Corp. et al.; Formations of; Acquisitions by; and Mergers of Bank Holding Companies

The companies listed in this notice have applied for the Board's approval under section 3 of the Bank Holding Company Act (12 U.S.C. 1842) and § 225.14 of the Board's Regulation Y (12 CFR 225.14) to become a bank holding company or to acquire a bank or bank holding company. The factors that are considered in acting on the applications are set forth in section 3(c) of the Act (12 U.S.C. 1842(c)).

Each application is available for immediate inspection at the Federal Reserve Bank indicated. Once the application has been accepted for processing, it will also be available for inspection at the offices of the Board of Governors. Interested persons may express their views in writing to the Reserve Bank or to the offices of the Board of Governors. Any comment on an application that requests a hearing must include a statement of why a written presentation would not suffice in lieu of a hearing, identifying specifically any questions of fact that are in dispute and summarizing the evidence that would be presented at a hearing.

Unless otherwise noted, comments regarding each of these applications must be received not later than March 21, 1988.

A. **Federal Reserve Bank of Richmond** (Lloyd W. Bostian, Jr., Vice President) 701 East Byrd Street, Richmond, Virginia 23261:

1. *Bank Maryland Corp.*, Towson, Maryland; to acquire 100 percent of the voting shares of Bank of Maryland—Harford County, Bel Air, Maryland, a *de novo* bank.

B. **Federal Reserve Bank of St. Louis** (Randall C. Sumner, Vice President) 411 Locust Street, St. Louis, Missouri 63166:

1. *Cadiz Bancorp, Inc.*, Cadiz, Kentucky; to become a bank holding company by acquiring 100 percent of the voting shares of Bank of Cadiz and Trust Company Cadiz, Kentucky. Comments on this application must be received by March 18, 1988.

Board of Governors of the Federal Reserve System, February 22, 1988.

James McAfee,

Associate Secretary of the Board.

[FR Doc. 88-4089 Filed 2-25-88; 8:45 am]

BILLING CODE 6210-01-M

John A. Boatner, Jr.; Change in Bank Control; Acquisition of Shares of Banks or Bank Holding Companies

The notificant listed below has applied under the Change in Bank Control Act (12 U.S.C. 1817(j)) and § 225.41 of the Bank's Regulation Y (12 CFR 225-41) to acquire a bank or bank holding company. The factors that are considered in acting on notices are set forth in paragraph 7 of the Act (12 U.S.C. 1817(j)(7)).

The notices are available for immediate inspection at the Federal Reserve Bank indicated. Once the notices have been accepted for processing, they will also be available for inspection at the offices of the Board of Governors. Interested persons may express their views in writing to the Reserve Bank indicated for that notice or to the offices of the Board of Governors. Comments must be received not later than March 14, 1988.

A. **Federal Reserve Bank of Atlanta** (Robert E. Heck, Vice President) 104 Marietta Street, NW, Atlanta, Georgia 30303:

1. *John A. Boatner, Jr.*, Bunkie, Louisiana, to retain 28.16 percent of the voting shares of Bunkie Bancshares, Inc., Bunkie, Louisiana, and thereby indirectly acquire Bunkie Bank & Trust Company, Bunkie, Louisiana.

Board of Governors of the Federal Reserve System, February 22, 1988.

James McAfee,

Associate Secretary of the Board.

[FR Doc. 88-4090 Filed 2-25-88; 8:45 am]

BILLING CODE 6210-01-M

The Chase Manhattan Corp.; Application to Offer Investment Advice and Securities Brokerage Services on a Combined Basis to Institutional Customers

The Chase Manhattan Corporation, New York, New York ("Applicant"), has applied, pursuant to section 4(c)(8) of the Bank Holding Company Act (12 U.S.C. 1843(c)(8)) ("BHC Act") and § 225.23(a)(3) of the Board's Regulation Y (12 CFR 225.23(a)(3)), for permission to expand the authority of its subsidiary, Chase Manhattan Treasury Corporation, New York, New York ("Company"), to offer investment advice and securities brokerage services on a combined basis to institutional customers. In particular, Applicant has applied for permission to expand the authority of Company to offer, in addition to services currently performed by Company for Applicant and its banking subsidiaries pursuant to section 4(c)(1) of the BHC Act, portfolio investment advice and research to institutional customers and affiliates; general economic information and financial advice, general economic statistical forecasting services, and industry studies to institutional customers; and securities brokerage (execution as agents) services, related securities credit activities, and incidental activities for institutional customers under circumstances not involving underwriting or dealing. Company also would, within defined parameters, exercise discretion in buying and selling securities, as agents, for the account of institutional customers.[1] Applicant would conduct the proposed activities from New York offices of the Company for institutional customers located both within the United States and abroad, as well as for affiliates.

The Board previously has determined that the combined offering of investment advice with securities brokerage services to institutional customers from the same bank holding company subsidiary is a permissible nonbanking activity and does not violate the Glass-Stegall Act. *National Westminster Bank PLC*, 72 Federal Reserve Bulletin 584 (1986) ("NatWest"); *Manufacturers Hanover Corporation*, 73 Federal Reserve Bulletin 930 (1987) ("*Manufacturers Hanover*"). That position has been upheld by the U.S. Court of Appeals for the District of Columbia Circuit in its affirmance of the Board's *NatWest* Order. *Securities Industry Ass'n* v. *Board of Governors*, 821 F.2d 810 (D.C. Cir. 1987), *petition for cert. filed*, 56 U.S.L.W. 3303 (U.S. Oct. 5, 1987) (No. 87-562). The provision of discretionary investment management services for institutional customers is an activity previously approved by Board Order in *J.P. Morgan and Co., Incorporated*, 73 Federal Reserve Bulletin 810 (1987) ("J.P. Morgan").

In addition to those classes of institutional customers previously authorized to receive such combined services in the *Manufacturers Hanover* Order, Applicant's proposed definition of institutional customer will encompass corporations, partnerships, proprietorships, organizations, and institutional entities with assets exceeding $1,000,000. It also appears that Applicant's proposal differs from the combined activities authorized by the Board in the *NatWest*, *J.P. Morgan*, and *Manufacturers Hanover* Orders in that Applicant proposes to engage in the cross (or joint) marketing of its various services for institutional customers provided by Company and other affiliates of Applicant.

Section 4(c)(8) of the BHC Act provides that a bank holding company may engage in any activity which the Board has determined to be "so closely related to banking or managing or controlling banks to be a proper incident thereto." A particular activity may be found to meet the "closely related to banking" test if it is demonstrated that banks have generally provided the proposed activity; that banks generally provide services that are operationally or functionally so similar to the proposed activity so as to equip them particularly well to provide the proposed activity; or that banks generally provide services that are so integrally related to the proposed activity as to require their provision in a specialized form. *National Courier Ass'n* v. *Board of Governors*, 516 F.2d 1229, 1237 (D.C. Cir. 1975). In addition, the Board may consider any other basis that may demonstrate that the activity has a reasonable or close connection or relationship to banking or managing and controlling banks. Board Statement Regarding Regulation Y, 49 FR 806 (1984).

Applicant believes that its proposed securities activities are closely related to banking essentially for the reasons previously espoused by the Board concerning the provision of similar activities to institutional customers in the Board's *NatWest*, *Manufacturers Hanover*, and *J.P. Morgan* Orders.

In determining whether an activity meets the second, or proper incident to banking, test of section 4(c)(8), the Board must consider whether the performance of the activity by an affiliate of a holding company "can reasonably be expected to produce benefits to the public, such as greater convenience, increased competition, or gains in efficiency that outweigh possible adverse effects, such as undue concentration of resources, decreased or unfair competition, conflicts of interests, or unsound banking practices."

Applicant contends that Company's conduct of the proposed activities will not result in any significant adverse effects, primarily for the reasons set forth by the Board in its *NatWest* Order, where the Board declined to find significant adverse effects in the conduct of similar activities. To avoid such adverse effects, Applicant states that it intends to conduct the proposed activities subject to certain limitations and commitments that reflect limitations and commitments previously required by the Board in its previous approvals of similar activities. Applicant believes that approval of the proposed activities will result in public benefits because Company will enter the market as a *de novo* competitor. Applicant states that the Board has stipulated in Regulation Y that commencement of activities *de novo* is presumed to result in benefits to the public through increased competition. 12 CFR 225.24. In addition, Applicant asserts that the ability of Company to engage in the combined activities at the same location will result in increased efficiencies for Company as well as increased convenience for its customers.

Applicant also contends that the securities powers moratorium contained in the Competitive Equality Banking Act of 1987 (Pub. L. No. 100-86, 101 Stat. 552 (1987)) does not apply to the activities covered in its application.

Any views or requests for hearing should be submitted in writing and received by William W. Wiles, Secretary, Board of Governors of the Federal Reserve System, Washington,

[1] The Company also has received Board approval to engage to a limited extent in underwriting and dealing in municipal revenue bonds (and certain industrial development bonds), one-to-four-family mortgage-backed securities, and certain types of consumer-related receivables. These activities are currently subject to the securities powers moratorium imposed by the Competitive Equality Banking Act of 1987 and are also the subject of a judicial stay arising from litigation regarding Board approval of such activities. *See Securities Industries Ass'n* v. *Board of Governors*, No. 87-4041 (2nd Cir. May 19, 1987).

DC 20551, not later than March 30, 1988. Any request for a hearing must, as required by § 262.3(e) of the Board's Rules of Procedure (12 CFR 262.3(e)), be accompanied by a statement of why a written presentation would not suffice in lieu of a hearing, identifying specifically any questions of fact that are in dispute, summarizing the evidence that would be presented at a hearing, and indicating how the party commenting would be aggrieved by approval of the proposal.

This application may be inspected at the offices of the Board of Governors or the Federal Reserve Bank of New York.

Board of Governors of the Federal Reserve System, February 22, 1988.

James McAfee,

Associate Secretary of the Board.

[FR Doc. 88-4091 Filed 2-25-88; 8:45 am]

BILLING CODE 6210-01-M

Haviland Bancshares, Inc.; Acquisition of Company Engaged in Permissible Nonbanking Activities

The organization listed in this notice has applied under § 225.23(a)(2) or (f) of the Board's Regulation Y (12 CFR 225.23(a)(2) or (f)) for the Board's approval under section 4(c)(8) of the Bank Holding Company Act (12 U.S.C. 1843(c)(8)) and § 225.21(a) of Regulation Y (12 CFR 225.21(a)) to acquire or control voting securities or assets of a company engaged in a nonbanking activity that is listed in § 225.25 of Regulation Y as closely related to banking and permissible for bank holding companies. Unless otherwise noted, such activities will be conducted throughout the United States.

The application is available for immediate inspection at the Federal Reserve Bank indicated. Once the application has been accepted for processing, it will also be available for inspection at the offices of the Board of Governors. Interested persons may express their views in writing on the question whether consummation of the proposal can "reasonably be expected to produce benefits to the public, such as greater convenience, increased competition, or gains in efficiency, that outweigh possible adverse effects, such as undue concentration of resources, decreased or unfair competition, conflicts of interests, or unsound banking practices." Any request for a hearing on this question must be accompanied by a statement of the reasons a written presentation would not suffice in lieu of a hearing, identifying specifically any questions of fact that are in dispute, summarizing the evidence that would be presented at a hearing, and indicating how the party commenting would be aggrieved by approval of the proposal.

Comments regarding the application must be received at the Reserve Bank indicated or the offices of the Board of Governors not later than March 18, 1988.

A. **Federal Reserve Bank of Kansas City** (Thomas M. Hoenig, Senior Vice President) 925 Grand Avenue, Kansas City, Missouri 64198:

1. *Haviland Bancshares, Inc.*, Haviland, Kansas; to continue to engage in leasing real and personal property pursuant to § 225.25(b)(5) of the Board's Regulation Y.

Board of Governors of the Federal Reserve System, February 22, 198.

James McAfee,

Associate Secretary of the Board.

[FR Doc. 88-4092 Filed 2-25-88; 8:45 am]

BILLING CODE 6210-01-M

DEPARTMENT OF HEALTH AND HUMAN SERVICES

Office of the Secretary

Agency Forms Submitted to the Office of Management and Budget for Clearance

Each Friday the Department of Health and Human Services (HHS) publishes a list of information collection packages it has submitted to the Office of Management and Budget (OMB) for clearance in compliance with the Paperwork Reduction Act (44 U.S.C. Chapter 35). The following are those packages submitted to OMB since the list was published on February 12, 1988.

Social Security Administration

(Call Reports Clearance Officer on 301-965-4149 for copies of package)

1. Joint Checking/Savings Account Rebuttal Statement—NEW—The information collected by use of form SSA-2574 is needed to determine whether funds in a joint bank account belong to the SSI individual and to ensure that the individual's resourced do not exceed the allowable limits. The affected public is comprised of applicants for and recipients of SSI benefits. *Respondents:* Individuals or households. *Number of Respondents:* 200,000; *Frequency of Response:* Occasionally; *Estimated Annual Burden:* 23,300 hours.

2. Vocational Rehabilitation "301" Program Development—0960-0282—This form is used by SSA to collect information which will be used to determine an individual's entitlement to continued payments while in an approved vocational rehabilitation program. *Respondents:* State or local governments. *Number of Respondents:* 8,000; *Frequency of Response:* Occasionally; *Estimated Annual Burden:* 2,000 hours.

OMB Desk Officer: Elaina Norden.

Health Care Financing Administration

(Call Reports Clearance Officer on 301-594-1238 for copies of package)

1. ICF/MR Survey Reporting Form—0938-0062—In order to participate in the Medicaid program ICF/MR providers must meet Federal standards. The survey form is used to record compliance and report it to the Federal government. *Respondents:* State or local governments. *Number of Respondents:* 3,916; *Frequency of Response:* Annually; *Estimated Annual Burden:* 12,648 hours.

2. End Stage Renal Disease Facility Survey Report—0938-0360—These forms are used by Stage agency surveyors to record compliance with ESRD conditions of coverage. *Respondents:* State or local governments. *Number of Respondents:* 1,400; *Frequency of Response:* Annually; *Estimated Annual Burden:* 1,994 hours.

Office of the Secretary

(Call Reports Clearance Officer on 202-245-6511 for copies of package)

1. Program Inspection to Determine the Extent of Client Satisfaction with Social Security Services—NEW—Information will be gathered from Social Security clients to determine their current extent of satisfaction with Social Security Services. *Respondents:* Individuals or households. *Number of Respondents:* 640; *Frequency of Response:* One-time; *Estimated Annual Burden:* 160 hours.

OMB Desk Officer: Shannah Koss-McCallum.

Office of Human Development Services

(Call Reports Clearance Officer on 202-472-4415 for copies of package)

1. Instruction for Grant Application for Head Start—NEW—The instrument will provide Head Start Program staff with a clearer and more detailed description of grantee program design activities and cost data in order to improve services provided to children and families. *Respondents:* State or local governments, Non-profit institutions. *Number of Respondents:* 1,950; *Frequency of Response:* One-time; *Estimated Annual Burden:* 11,700 hours.

OMB Desk Officer: Shannah Koss-McCallum.

Public Health Services

(Call Reports Clearance Officer on 202-245-2100 for copies of package)

Centers for Disease Control

1. NCHS Application for Technical Assistance—Training Form—0937-0124—Applicants for mortality medical coder training and for vital registration methods training complete an application form for use by the instructor in selecting training applicants. An annual survey of medical coder training is conducted among vital registration areas. This training is in support of coverage and quality of national vital statistics data. *Respondents:* Individuals or households, State or local governments. *Number of Respondents:* 180; *Frequency of Response:* One-time; *Estimated Annual Burden:* 49 hours.

Assistant Secretary for Health

1. Study of Physicians' Experiences in Treating Patients with Rare Diseases—NEW—The National Commission on Orphan Diseases will survey physicians about the availability of information on rare diseases, the importance they place on voluntary organizations, the willingness of physicians to use investigational drugs, and barriers for diagnosis, treatment, or prophylaxis of a rare disease. *Respondents:* Individuals or households. *Number of Respondents:* 440; *Frequency of Response:* One-time; *Estimated Annual Burden:* 74 hours.

2. Study of Patients with Rare and Common Diseases: Experience with Research, Diagnosis and Treatments—NEW—To develop recommendations for the Administration and Congress, the National Commission on Orphan Diseases will survey patients with orphan (rare) diseases to identify difficulties they may have had in being diagnosed, accessing information about their illness or learning about ongoing research and new treatments. *Respondents:* Individuals or households. *Number of Respondents:* 800; *Frequency of Response:* One-time; *Estimated Annual Burden:* 533 hours.

3. Study of Researchers Focusing on Rare Disease and on Common Diseases: Barriers to Achieving Research Objectives—NEW—The National Commission on Orphan Diseases will survey researchers applying for grants at NIH, ADAMHA, and FDA to identify difficulties they may have encountered in accomplishing their research goals in the area of rare diseases. Recommendations will be sent to Congress and the Administration. *Respondents:* Individuals or households. *Number of Respondents:* 800; *Frequency of Response:* One-time; *Estimated Annual Burden:* 433 hours.

National Institutes of Health

1. Case-Control Study of Lung Cancer Among Radon Exposed Tin Miners and Residents of Gejiu, China—NEW—Radon is an important determinant of lung cancer among miners. Elevated radon levels have been detected in homes throughout the U.S. These data will permit the most precise modeling to date of the dose response relationship, particularly among young individuals, and of the interaction of radon and tobacco consumption. *Respondents:* Individuals or households. *Number of Respondents:* 1,800; *Frequency of Response:* One-time; *Estimated Annual Burden:* 1,501 hours.

OMB Desk Officer: Shannah Koss-McCallum.

As mentioned above, copies of the information collection clearance packages can be obtained by calling the Reports Clearance Officer, on one of the following numbers:

PHS: 202-245-2100
OS: 202-245-6511
SSA: 301-965-4149
OHDS: 202-472-4415
HCFA: 301-594-1238

Written comments and recommendations for the proposed information collections should be sent directly to the appropriate OMB Desk Officer designated above at the following address: OMB Reports Management Branch, New Executive Office Building, Room 3208, Washington, DC 20503.

ATTN: (name of OMB Desk Officer).

Date: February 22, 1988.

James F. Trickett,

Deputy Assistant Secretary, Administrative and Management Services.

[FR Doc. 88-4111 Filed 2-25-88; 8:45 am]

BILLING CODE 4150-04-M

Food and Drug Administration

[Docket No. 86D-0311]

Preparation of Investigational New Drug Products; Current Good Manufacturing Practice Draft Guideline; Notice of Availability

AGENCY: Food and Drug Administration.

ACTION: Notice.

SUMMARY: The Food and Drug Administration (FDA) is announcing the availability of a draft guideline entitled "Guideline on the Preparation of Investigational New Drug Products." The guideline outlines certain practices and procedures which the agency views as acceptable for the preparation of investigational new drug products for human and animal use. The guideline is intended to inform interested persons of these acceptable practices and procedures to facilitate compliance with the current good manufacturing practice (CGMP) regulations and to help assure the quality of human and animal drug products.

The guideline is being made available for public comment to provide the agency with views to be considered in its development of a final guideline.

DATE: Comments on or before May 26, 1988.

ADDRESS: Written requests for a copy of the draft guideline or comments to the Dockets Management Branch (HFA-305), Food and Drug Administration Rm. 4-62, 5600 Fishers Lane, Rockville, MD 20857. (Send two self-addressed adhesive labels to assist the Branch in processing your requests.)

FOR FURTHER INFORMATION CONTACT: Paul J. Motise, Center for Drug Evaluation and Research (HFN-323), Food and Drug Administration, 5600 Fishers Lane, Rockville, MD 20857, 301-295-8089.

SUPPLEMENTARY INFORMATION: The draft guideline is intended to inform interested persons of certain practices and procedures for the preparation of investigational new drug products for human and animal use that FDA believes constitute acceptable ways of compliance with applicable CGMP regulations. This draft guideline addresses only those areas for which FDA guidance or clarification is most frequently requested, and does not comprehensively cover all aspects of investigational new drug manufacturing operations. Other aspects of investigational new drug manufacturing operations may be addressed in response to comments received on the draft guideline.

The draft guideline is being made available for public comment before being issued as the formal position of the agency. If, following the receipt of comments, the agency concludes that the guidelines reflects acceptable practices and procedures for the preparation of investigational new drug products, the guideline will be made final and its availability will be announced in the **Federal Register** under § 10.90(b) (21 CFR 10.90(b)). That section provides for use of guidelines to establish procedures of general applicability that are not legal requirements but are acceptable to the agency. A person who follows a guideline is assured that his or her conduct will be acceptable to the agency. A person may also choose to

use alternate procedures even though they are not provided for in the guideline. A person who chooses to do so may discuss the matter further with the agency to prevent expenditure of money and effort on an alternate procedure that the agency may later determine to be unacceptable. Manufacturers are encouraged to use this opportunity to submit comments on the draft guideline if they have suggestions for its revision.

Interested persons may, on or before May 26, 1988, submit written comments on the draft guideline to the Dockets Management Branch (address above). These comments will be considered in determining whether further amendments to, or revisions of, the draft guideline are warranted. Comments should be in two copies (except that individuals may submit single copies), identified with the docket number found in brackets in the heading of this document. The draft guideline and received comments may be seen in the Dockets Management Branch between 9 a.m. and 4 p.m., Monday through Friday. Requests for a single copy of the draft guideline should be sent to the dockets Management Branch.

Dated: February 17, 1988.

Frank E. Young,

Commissioner of Food and Drugs.

[FR Doc. 88-4147 Filed 2-23-88; 4:14 pm]

BILLING CODE 4160-01-M

Consumer Participation; Open Meeting

AGENCY: Food and Drug Administration.

ACTION: Notice.

SUMMARY: The Food and Drug Administration (FDA) is announcing the following consumer exchange meeting: **New Orleans District Office,** chaired by Robert O. Bartz, District Director. the topics to be discussed are cholesterol labeling and health claims on food labels.

DATE: Tuesday, March 22, 1988, 1:30 p.m.

ADDRESS: Arkansas State Department of Health Auditorium, 4815 West Markham St., Little Rock, AR 72201.

FOR FURTHER INFORMATION CONTACT: Barbara Lloyd, Consumer Affairs Officer, Food and Drug Administration, 4298 Elysian Fields Ave., New Orleans, LA 70122, 504-589-2420.

SUPPLEMENTARY INFORMATION: The purpose of this meeting is to encourage dialogue between consumers and FDA officials, to identify and set priorities for current and future health concerns, to enhance relationships between local consumers and FDA's District Offices, and to contribute to the agency's policymaking decisions on vital issues.

Dated: February 22, 1988.

John M. Taylor,

Associate Commissioner for Regulatory Affairs.

[FR Doc. 88-4104 Filed 2-25-88; 8:45 am]

BILLING CODE 4160-01-M

[Docket No. 88N-0046]

Vibrio Vulnificus as Related to Shellfish Sanitation and Shellfish-Growing Waters; Workshop

AGENCY: Food and Drug Administration.

ACTION: Notice.

SUMMARY: The Food and Drug Administration (FDA), in cooperation with the Interestate Shellfish Sanitation Conference (ISSC), the National Marine Fisheries Service (NMFS) and the Shellfish Institute of North America (SINA), is sponsoring a workshop to discuss the current state of knowledge on *Vibrio vulnificus* (*V. vulnificus*) as related to shellfish sanitation and shellfish-growing waters. Information from the workshop is to be used by the ISSC at its July 1988 annual meeting. The ISSC develops and adopts model administrative procedures and sanitary guidelines to be voluntarily implemented by participating states.

DATE: The workshop will be held March 15 through 17, 1988, from 8:30 a.m. to 5:30 p.m., Rm. 703A, Hubert H. Humphrey Bldg., 200 Independence Ave. SW., Washington, DC 20201. The workshop will adjourn at 11:30 a.m. on March 17, 1988.

ADDRESS: Interested parties are invited to submit written information to FDA on *V. vulnificus* as it relates to the sanitary control of shellfish, and to contact FDA if they wish to participate in the workshop. A summary of the workshop will be prepared for submission to the ISSC, and will be available from FDA upon request. Written information and comments should be submitted to the Dockets Management Branch (HFA-305), Food and Drug Administration, Rm. 4-62, 5600 Fishers Lane, Rockville, MD 20857.

FOR FURTHER INFORMATION CONTACT: Cynthia C. Leggett, Center for Food Safety and Applied Nutrition (HFF-326), Food and Drug Administration, 200 C St. SW., Washington, DC 20204, 202-485-0251.

SUPPLEMENTARY INFORMATION: There are currently no known sanitation or other public health controls that can limit the harvesting of shellfish to those areas that are free of *V. vulnificus* or control the presence and growth of the organism in the marketplace. *Vibrio vulnificus* is a species of marine bacteria, which appears to be naturally occurring in the estuarine environment and unassociated with federal pollution sources or loads. The organism has been recovered from the shell surfaces of shellfish as well as from internal organs. The organism grows at refrigerated temperatures, and has been shown to multiply during cold storage. However, the *V. vulnificus* organism is relatively new to public health microbiologists, and there is much about the organism that is not known.

The ISSC is composed of State shellfish regulatory officials, industry officials, FDA, and other Federal agencies. The ISSC permits State regulatory officials to establish uniform guidelines and to exchange reliable information on sources of safe shellfish. The ISSC has adopted the National Shellfish Sanitation Program Manual, as well as formal procedures that will enable it to adopt changes in the manual. In March 1984, FDA entered into a Memorandum of Understanding (MOU) with the ISSC and formally established a cooperative relationship with both the states and shellfish industry. The ISSC plays an important role in assuring that uniform shellfish control measures are adopted, and that those measures are enforced consistently by State regulatory authorities.

The intent of the workshop is to bring together experts with experience in the isolation, identification, and determination of the pathogenicity of *V. vulnificus*; with knowledge of environmental conditions affecting the occurrence of *V. vulnificus* in shellfish and the knowledge of the epidemiology of *V. vulnificus* illnesses.

Space is limited to about 60 persons. Technical experts are being invited to participate. The participants will be divided into working groups to address topics of environmental conditions, time/temperature date, epidemiology, and analytical methods. Discussions will focus on determining the most effective microbiological methods of detection currently available, the potential merits of other methods under development, what is known regarding the relationship of time and temperature on the levels of *V. vulnificus* in shellstock, the geographic distribution and seasonal occurrence of *V. vulnificus* in the environment, the factors governing the relationship betweeen the presence of *V. vulnificus* in the environment and its occurrence in shellstock, and the factors leading to actual disease outbreaks. On the final half day, a discussion panel will review and summarize the conclusions from the

working groups. The information will be considered by the ISSC at its July 1988 workshop to determine whether additional sanitary guidelines or other controls are needed to be adopted by the states under their State laws and regulations.

Dated: February 19, 1988.

John M. Taylor,

Associate Commissioner for Regulatory Affairs.

[FR Doc. 88-4102 Filed 2-25-88; 8:45 am]

BILLING CODE 4160-01-M

Public Health Service

Advisory Committees Meeting; Change in Starting Time of Meeting

The **Federal Register** document 87-2608, dated Monday, February 8, 1988, states on page 3642 that the starting time of the Health Care Technology Study Section meeting of March 7, 1988 is 8:30 a.m. This starting time has been changed to 10:00 a.m. All other information is unchanged.

Donald E. Goldstone,

Acting Director, National Center for Health Services Research and Health Care Technology Assessment.

[FR Doc. 88-4113 Filed 2-25-88; 8:45 am]

BILLING CODE 4160-17-M

DEPARTMENT OF THE INTERIOR

Bureau of Indian Affairs

Ely Indian Colony, NV; Acceptance of Retrocession of Jurisdiction

January 25, 1988

Pursuant to the authority vested in the Secretary of the Interior by Executive Order No. 11435 of November 21, 1968 (33 FR 17339) and redelegated to the Assistant Secretary—Indian Affairs by 209 DM 8, I hereby accept as of 12:01 a.m. PST, March 1, 1987, retrocession to the United States of all jurisdiction, civil and criminal, over the Ely Indian Colony which was acquired by the State of Nevada pursuant to Pub. L. 83-280, 67 Stat. 588, 18 U.S.C. 1162, 28 U.S.C. 1360.

The retrocession herein accepted was offered by Assembly Bill 702 of the 1985 session of the Nevada Legislature, Chap. 649, 1985 Nev. Stats., and transmitted to the Secretary by the Secretary of State of Nevada on July 3, 1985. By Resolution No. 85-EC-11 dated February 5, 1985, the Ely Indian Colony requested that the State of Nevada retrocede civil and criminal jurisdiction to the United States.

Ross O. Swimmer,

Assistant Secretary—Indian Affairs.

[FR Doc. 88-4167 Filed 2-25-88; 8:45 am]

BILLING CODE 4310-02-M

Bureau of Reclamation

Intent To Prepare Joint Supplemental Environmental Impact Statement and Report; New Melones Water Supply Project, Tuolumne County, CA

AGENCY: Bureau of Reclamation, Interior.

ACTION: Notice of intent to prepare a joint supplemental environmental impact statement/environmental impact report, New Melones Water Supply Project.

SUMMARY: Pursuant to section 102(2)(C) of the National Environmental Policy Act, and to section 21002 of the California Environmental Quality Act, the Bureau of Reclamation, Department of the Interior, and the County of Tuolumne, California, propose to prepare a joint Supplemental Environmental Impact Statement/Environmental Report (SEIS/EIR) addressing the expected impacts and mitigation measures associated with the New Melones Water Supply Project (NMWSP). The SEIS/EIR will be filed with the Environmental Protection Agency and be available to the public.

DATES: Public scoping meetings will be held at 7:00 p.m. on March 9, 1988, at the Board of Supervisors Chambers, Tuolumne County Administrative Center, 2 South Green Street, Sonora, California, and 10:00 a.m. on March 10, 1988, at the Bureau of Reclamation's second floor conference room, Room W-2142, 2800 Cottage Way, Sacramento, California.

Written comments will also be accepted, and must be submitted on or before March 28, 1988.

FOR FURTHER INFORMATION CONTACT:

Michael Delamore (MP-760), Environmental Specialist, U.S. Bureau of Reclamation, 2800 Cottage Way, Sacramento, CA 95825, Phone: (916) 978-5120

James E. Nuzum, Planning Director, County of Tuolumne, County Administration Office, 2 South Green Street, Sonora, CA 95370, Phone: (209) 533-5511.

SUPPLEMENTARY INFORMATION: The NMWSP is proposed to supply water users in Tuolumne County with water pumped from the Bureau of Reclamation's New Melones Reservoir, a component of the Central Valley Project. The primary water user will be the Sonora Mining Corporation. Other types of water uses that will be supplied by the project include various municipal, industrial, and agricultural uses in the vicinity of Jamestown, Sonora, and Columbia, California. As currently proposed, the Sonora Mining Corporation will finance the project and the water will be delivered pursuant to a contract to be executed by the Bureau of Reclamation and the Tuolumne Regional Water District.

The NMWSP will convey up to 5,000 acre-feet of water annually from New Melones Reservoir via a buried 16-inch diameter pipeline to the existing water delivery ditch system in Tuolumne County. The water would enter the existing ditch system at an elevation of 2,460 feet after being pumped through two pumping stations and the pipeline. The pumping head, when New Melones Reservoir is at its average recreation pool level, would be approximately 1,020 feet. The new pipeline and a proposed siphon will allow water delivered to the project to be conveyed through the existing Matelot, San Diego, Table Mountain, Shaws Flat, and Montezuma Ditches. When there is surplus water in the ditch system, water will be conveyed in reverse down the proposed pipeline to a new 350 kW hydroelectric powerhouse.

The SEIS/EIR will also include an assessment of two alternative project configurations that are also designated to deliver water from New Melones Reservoir to Tuolumne County. The potential impacts of these alternatives will be compared to the proponent's preferred alternative described above, and a No Action Alternative will also be assessed. The analysis of the No Action Alternative will examine the potential impacts associated with Tuolumne County pursuing water supply alternatives that do not involve the delivery of Central Valley Project water from New Melones Reservoir.

The Bureau of Reclamation has determined that a supplement to the original New Melones Reservoir Environmental Impact Statement is needed, because the original document did not include an assessment of water uses in the areas associated with the current NMWSP alternatives. Furthermore, Tuolumne County needs to prepare an Environmental Impact Report to define the potential impacts of the project's pipelines and other features.

Dated: February 12, 1988.

C. Dale Duvall,

Commissioner.

[FR Doc 88-3979 Filed 2-25-88; 8:45 am]

BILLING CODE 4310-09-M

National Park Service

Boundary Change; George Rogers Clark National Historical Park, IN

AGENCY: National Park Service, Interior.

ACTION: Boundary Change, George Rogers Clark.

SUMMARY: The boundary of George Rogers Clark National Historical Park authorized July 23, 1966, 80 Stat. 325, is revised to provide for the addition of 0.68 acres more or less, to allow for the development of an adequate facility to store the park's equipment, materials, supplies and collections, and to conduct its routine maintenance activities.

This boundary change is made pursuant to the authority contained in Pub. L. 95-42, 91 Stat. 211.

The tract of land added is identified as follows:

Part of Parcel No. 1 of Lower Prairie Survey No. 1 Plat dated, November 12, 1820, bounded on the Southeast by the Northwesterly right of way line of Henderson Road, bounded Northeast by the Northeasterly right of way line of Willow Road, bounded on the Southwest by a line 210 feet Southwesterly of the Northeasterly right of way line of Willow Road and being parallel thereto, and bounded on the Northwest by a line 142 feet Northwesterly of the Northwesterly right of way line of Henderson Road and being parallel thereto.

The above described Tract P-1 is part of that land acquired by Vincennes Church by virtue of U.S. Patent No. 1121213 issued by the U.S. Department of the Interior Bureau of Land Management dated September 10, 1946, and recorded September 19, 1946, in Deed Record 114, page 401, in the Office of the Recorder of Knox County, Indiana.

Information regarding this boundary change is available at the following addresses:

Director, National Park Service, Department of the Interior, Washington, DC 20240

Regional Director, Midwest Regional Office, National Park Service, 1709 Jackson Street, Omaha, Nebraska 68102

Superintendent, George Rogers Clark National Historical Park, 401 South Second Street, Vincenes, Indiana 47591

Date: June 21, 1986.

Randall R. Pope,

Acting Regional Director.

[FR Doc. 88-4144 Filed 2-25-88; 8:45 am]

BILLING CODE 4310-70-M

Santa Monica Mountains National Recreation Area; Minor Boundary Change and Addition of Certain Lands

By virtue of the authority contained in section 5(ii) of the Act of June 10, 1977 (91 Stat. 210), as amended and section 507(c)(1) of the Act of November 10, 1978 (92 Stat. 3467), notice is hereby given that the boundaries of Santa Monica Mountains National Recreation Area are modified to include the following described lands:

Parcel 1:

That portion of Lot "A" as designated on the partition map of the Rancho Las Virgenes, in the county of Los Angeles, state of California, filed in Case No. 2898, Superior Court of Los Angeles County, lying northerly of the following described line:

Beginning at a point on the westerly line of said Lot "A", said point being North 14 degrees 00 minutes 35 seconds east 442.21 feet from Station 6 of said Lot "A"; thence south 89 degrees 40 minutes 14 seconds east 335.55 feet to the beginning of a tangent curve concave northwesterly and having a radius of 1850.00 feet; thence easterly and northerly along said curve through a central angle of 61 degrees 30 minutes 13 seconds an arc distance of 1985.87 feet; thence leaving said curve, south 89 degrees 54 minutes 39 seconds east 563.13 feet more or less, to a point on the easterly line of said lot "A", said point being south 3 degrees 03 minutes 26 seconds west 3526.32 feet from the northeasterly corner of said Lot "A".

Parcel 2:

A portion of Lot "A" as designated on the partition map of Las Virgenes, in the County of Los Angeles, State of California, filed in Case No. 2898, Superior Court of Los Angeles County, beginning at a point on the westerly line of said Lot "A", said point being north 14 degrees 00 minutes 35 seconds east 442.21 feet from Station 6 of said Lot "A": thence 89 degrees 40 minutes 14 seconds east 335.55 feet; to the beginning of a tangent curve northwesterly and having a radius of 1840.00 feet; thence easterly and northerly along said curve for an arc length of 511.87 feet to the true point of beginning: thence, continuing north and east along said curve for an arc length of 1475 feet; thence south 89 degrees 54 minutes 39 seconds east 563.13 feet more or less, to a point in the easterly line of said Lot "A", said point being south 3 degrees 03 minutes 26 seconds west 3526.32 feet from the northeast corner of said Lot "A": thence south 3 degrees 03 minutes 26 seconds west along the easterly line of said Lot "A" 925.00 feet; thence in a westerly direction, 1630 feet more or less to the true point of beginning.

Dated: February 10, 1988.

Donald Paul Hodel,

Secretary of the Interior.

[FR Doc. 88-4145 Filed 2-25-88; 8:45 am]

BILLING CODE 4310-70-M

Upper Delaware Citizens Advisory Council; Meeting

AGENCY: National Park Service; Upper Delaware Citizens Advisory Council, Interior.

ACTION: Notice of meeting.

SUMMARY: This notice sets forth the date of the forthcoming meeting of the Upper Delaware Citizens Advisory Council. Notice of this meeting is required under the Federal Advisory Committee Act.

DATE: February 26, 1988, 7:00 p.m.[1]

Inclement Weather Reschedule Date: March 11, 1988.

ADDRESS: Town of Tusten Hall, Narrowsburg, New York.

FOR FURTHER INFORMATION CONTACT: John T. Hutzky, Superintendent; Upper Delaware Scenic and Recreational River, P.O. Box C, Narrowsburg, NY 12764-0159; 717-729-8251.

SUPPLEMENTARY INFORMATION: The Advisory Council was established under section 704(f) of the National Parks and Recreation Act of 1978, Pub. L. 95-625, 16 U.S.C. 1724 note, to encourage maximum public involvement in the development and implementation of the plans and programs authorized by the Act. The Council is to meet and report to the Delaware River Basin Commission, the Secretary of the Interior, and the Governors of New York and Pennsylvania in the preparation and implementation of the management plan, and on programs which relate to land and water use in the Upper Delaware region. The agenda for the meeting will surround establishment of new committees and Council administrative business.

The meeting will open to the public.

[1] Announcements of cancellation due to inclement weather will be made by radio stations WDNH, WDLC, WSUL, and WVOS.

Any member of the public may file with the Council a written statement concerning agenda items. The statement should be addressed to the Upper Delaware Citizens Advisory Council, P.O. Box 84, Narrowsburg, NY 12764. Minutes of the meeting will be available for inspection four weeks after the meeting, at the permanent headquarters of the Upper Delaware Scenic and Recreational River; River Road, 1-3/4 miles north of Narrowsburg, New York; Damascus Township, Pennsylvania.

Anthony M. Corbisiero,

Acting Regional Director, Mid-Atlantic Region.

[FR Doc. 88-4143 Filed 2-25-88; 8:45 am]

BILLING CODE 4310-70-M

INTERSTATE COMMERCE COMMISSION

Intent To Engage in Compensated Intercorporate Hauling Operations

This is to provide notice as required by 49 U.S.C. 10524(b)(1) that the named corporations intend to provide or use compensated intercorporate hauling operations as authorized in 49 U.S.C. 10524(b).

A. Parent corporation and address of principal office: Baldwin Piano & Organ Co. Hwy 63 South Trumann, AR 72472. Wholly-owned subsidiaries which will participate in the operations, and State(s) of incorporation: Wurlitzer Piano Co. Incorporated in Delaware.

B. 1. Parent corporation, address of principal office and State of incorporation: ConAgra, Inc., ConAgra Center, One Central Park Plaza, Omaha, NE 68102 (a Delaware corporation).

2. Wholly-owned subsidiaries which will participate in the operations, addresses of their respective principal offices and State of incorporation:

1. 1050 Sansome Corporation, 1050 Sansome St., Ste 600, San Francisco, CA 94111 (a California corporation).

2. Ag Chem, Inc., Box 67, Girdletree, MD 21829 (a Maryland corporation).

3. AgriBasics Fertilizer Company, One Regency Square, 700 E. Hill Ave., Ste 400, Knoxville, TN 37915 (a Delaware corporation).

4. Agricol Corporation, Inc., 191 Presidential Blvd., Ste 106, Bala Cynwyd, PA 19004 (a Pennsylvania corporation).

5. Alliance Grain, Inc., Fairway Corporate Center, Ste 313, 4300 Haddonfield Road, Pennsauken, NJ 08109 (a Pennsylvania corporation).

6. Alliance Grain Export, Inc., Fairway Corporate Center, Ste 313, 4300 Haddonfield Road, Pennsauken, NJ 08109 (a Delaware corporation).

7. Armour Food Express Company, ConAgra Center, One Central Park Plaza, Omaha, NE 68102 (a Delaware corporation).

8. Atwood Commodities, Inc., 876 Grain Exchange Building, Minneapolis, MN 55415 (a Nebraska corporation).

9. Atwood-Larson Company, 876 Grain Exchange Building, Minneapolis, MN 55415 (a Minnesota corporation).

10. Balcom Chemicals, 4687—18th Street, Greeley, CO 80634 (a Colorado corporation).

11. CAG Company, ConAgra Center, One Central Park Plaza, Omaha, NE 68102 (an Oklahoma corporation).

12. CAG Leasing Company, ConAgra Center, One Central Park Plaza, Omaha, NE 68102 (a Texas corporation).

13. Caribbean Basic Foods Company, GPO Box G-1960, San Juan, PR 00936 (a Nebraska corporation).

14. C & L Grain & Feed Company, Inc., Main Street, Townsend, DE 19734 (a Delaware corporation).

15. Central Valley Chemicals, Inc., P.O. Box 446, Weslaco, TX 78596 (a Texas corporation).

16. ConAgra International Fertilizer Company, One Regency Square, 700 E. Hill Ave., Ste. 400, Knoxville, TN 37915 (a Delaware corporation).

17. ConAgra International, Inc., ConAgra Center, One Central Park Plaza, Omaha, NE 68102 (a Delaware corporation).

18. ConAgra International Netherlands, Inc., ConAgra Center, One Central Park Plaza, Omaha, NE 68102 (a Delaware corporation).

19. ConAgra Lonergan Corporation, ConAgra Center, One Central Park Plaza, Omaha, NE 68102 (a Nebraska corporation).

20. ConAgra Pet Products Company, 3902 Leavenworth Street, Omaha, NE 68105 (a Delaware corporation).

21. ConAgra Poultry Company, 422 N. Washington, Box 1997, El Dorado, AR 71730 (a Delaware corporation).

22. ConAgra Transportation, Inc., One Regency Square, 700 E. Hill Ave., Ste 400, Knoxville, TN 37915 (an Oklahoma corporation).

23. The Cropmate Company, One Regency Square, 700 E. Hill Ave., Ste 400, Knoxville, TN 37915 (a Nebraska corporation).

24. CTC North America, Inc., 730 Second Avenue South, Minneapolis, MN 55402 (a Delaware corporation).

25. Dixie Ag Supply, Inc., 1801 Old Montgomery Road, Selma, AL 36701 (a Alabama corporation).

26. E. A. Miller, Inc., 410 North 200 West, Hyrum, UT 84319 (a Utah corporation).

27. GA AG Chem, Inc., Empire Expressway, PO Box 1260, Swainsboro, GA 30401 (a Georgia corporation).

28. Geldermann Futures Management Corp., 440 LaSalle Street, One Financial Place, 20th Floor, Chicago, IL 60605 (a Illinois corporation).

29. Geldermann Inc., 440 LaSalle Street, One Financial Place, 20th Floor, Chicago, IL 60605 (an Illinois corporation).

30. Geldermann Securities Inc., 440 LaSalle Street, One Financial Place, 20th Floor, Chicago, IL 60605 (a Delaware corporation).

31. Grower Service Corporation (New York), 16713 Industrial Parkway, PO Box 18037, Lansing, MI 48901 (a New York corporation).

32. Heinold Asset Management, Inc., 440 LaSalle Street, One Financial Place, 20th Floor, Chicago, IL 60605 (a Delaware corporation).

33. Heinold Asset Management Service Corp., 440 LaSalle Street, One Financial Place, 20th Floor, Chicago, IL 60605 (a Delaware corporation).

34. Heinold Commodities, Inc., 440 LaSalle Street, One Financial Place, 20th Floor, Chicago, IL 60605 (a Delaware corporation).

35. Hess & Clark, Inc., 7th & Orange Street, Ashland, OH 44805 (an Ohio corporation).

36. Hopkins Agricultural Chemical Company, 537 Atlas Avenue, Madison, WI 53714 (an Illinois corporation).

37. Interstate Feeders, Inc., PO Box 626, Malta, ID 83342 (a Utah corporation).

38. JVL Corporation, 200 VorHees, Terre Haute, IN 47802 (an Indiana corporation).

39. Longmont Transportation Company, Inc., ConAgra Center, One Central Park Plaza, Omaha, NE 68102 (a Colorado corporation).

40. Loveland Industries, Inc., 2307 W. 8th Street, Loveland, CO 80539 (a Colorado corporation).

41. Lynn Transportation Company, Inc., 422 N. Washington, Box 1997, El Dorado, AR 71730 (an Iowa corporation).

42. MHC, Inc., ConAgra Center, One Central Park Plaza, Omaha, NE 68102 (an Oregon corporation).

43. M & R Distributing Company, PO Box E, West Highway 30, Grand Island, NE 68801 (a Minnesota corporation).

44. Mid Valley Chemicals, Inc., PO Box 446, Weslaco, TX 78596 (a Texas corporation).

45. Midwest Agriculture Warehouse Company, 725 S. Schneider Street, Freemont, NE 68025 (a Nebraska corporation).

46. Miller Brothers, Inc., 410 North 200 West, Hyrum, UT 84319 (a Utah corporation).

47. Molinos de Puerto Rico, Inc., GPO Box G—1960, San Juan, PR 00936 (a Nebraska corporation).

48. Monfort Energy Resources, Inc., PO Box G, Greeley, CO 80632 (a Colorado corporation).

49. Monfort Food Distributing Company, PO Box G, Greeley, CO 80632 (a Colorado corporation).

50. Monfort Lamb Company, PO Box G, Greeley, CO 80632 (a Delaware corporation).

51. Monfort of Colorado, PO Box G, Greeley, CO 80632 (a Delaware corporation).

52. Monfort Transportation Company, PO Box G, Greeley, CO 80632 (a Colorado corporation).

53. Northwest Chemical Corporation, 4560 Ridge Road, NW., Salem, OR 97303 (an Oregon corporation).

54. O'Donnell-Usen Fisheries, Inc., 255 Northern Avenue, Boston, MA 02210 (a Massachusetts corporation).

55. Omaha Vaccine Company, Inc., 3030 "L" Street, Omaha, NE 68107 (a Nebraska corporation).

56. Ostlund Chemical Company, 1230–40th Street, NW., Fargo, ND 58102 (a North Dakota corporation).

57. Peavey, Marts, Inc., Country General Stores, 123 S. Webb Road, Grand Island, NE 68802.

58. Platte Chemical Company, 150 S. Main Street, Fremont, NE 68025 (a Nebraska corporation).

59. Public Grain Elevator of New Orleans, Inc., 730 Second Avenue South, Minneapolis, MN 55402 (a Louisiana corporation).

60. Pueblo Chemical & Supply Company, PO Box 1279, Garden City, KS 67846 (a Colorado corporation).

61. The Purchase Holding Company, ConAgra Center, One Central Park Plaza, Omaha, NE 68102 (a Delaware corporation).

62. Scentry, Inc., 11806 E. Riggs Road, Chandler, AZ 85224 (a Delaware corporation).

63. Sheepskin Products, Inc., 145 Factory Road, Eaton, CO 80615 (a Colorado corporation).

64. Snake River Chemicals, Inc., PO Box 1196, Caldwell, ID 83650 (an Idaho corporation).

65. Summit Commodity Advisers, Inc., PO Box G, Greeley, CO 80632 (a Colorado corporation).

66. Summit Trading Company, Inc., 165 S. Union Blvd., 470, Lakewood, CO 80228 (a Colorado corporation).

67. Taco Plaza, Inc., ConAgra Center, One Central Park Plaza, Omaha, NE 68102 (a Texas corporation).

68. To-Ricos, Inc., PO Box 646, Aibonito, PR 00609 (a Nebraska corporation).

69. Trans-Agra International, Inc., 1525 Lockwood Road, Billings, MT 59101 (a Tennessee corporation).

70. Transbas, Inc., 1525 Lockwood Road, Billings, MT 59101 (a Tennessee corporation).

71. The Trekker Company, One Regency Square, 700 E. Hill Avenue, Ste 400, Knoxville, TN 37915 (a Nebraska corporation).

72. Tri-River Chemical Company, Inc., PO Box 2778, Pasco, WA 99302 (a Washington corporation).

73. Tri State Chemicals, Inc., PO Box 1837, Hereford, TX 79045 (a Texas corporation).

74. Tri State Delta Chemicals, Inc., 2673 Old Leland Road, PO Box 5817, Greenville, MS 38704 (a Mississippi corporation).

75. Tropmi Import Company, 5024 Uceta Road, PO Box 2819, Tampa, FL 33619.

76. UAP Special Products, Inc., 13808 "F" Street, Omaha, NE 68137 (a Nebraska corporation).

77. United Agri Products, Inc., 2687—18th Street, Box 1286, Greeley, CO 80634 (a Delaware corporation).

78. United Agri Products, Financial Services, Inc., 4687—18th Street, Box 1287, Greeley, CO 80634 (a Colorado corporation).

79. United Agri Products-Florida, Inc., 3804 Coconut Palm Drive, Ste 170, Tampa, FL 33619 (a Florida corporation).

80. U.S. Tire, Inc., 3443 N. Central Ave., Ste 1205, Phoenix, AZ 80512 (a Florida corporation).

81. Weld Agricultural Credit, Inc., PO Box G, Greeley, CO 80632 (a Colorado corporation).

82. Weld Insurance Company, PO Box G, Greeley, CO 80632 (a Colorado corporation).

83. Westchem Agricultural Chemicals, Inc., 1505 Lockwood Road, Billings, MT 59107 (a Montana corporation).

84. Willow Creek Talc, Inc., 1603 Cooper Road, Anaconda, MT 59711 (a Montana corporation).

85. Woodward & Dickerson, Eurasia, Ltd., Woodward House, 937 Haverford Road, Bryn Mawr, PA 19010 (a Pennsylvania corporation).

86. WVS, Inc., 537 Atlas Avenue, Madison, WI 53714 (an Illinois corporation).

87. Yellowstone Valley Chemicals, Inc., 1525 Lockwood Road, Billings, MT 59101 (a Montana corporation).

C. 1. Parent Corporation and address of principal office: Lafarge Corporation, 11130 Sunrise Valley Drive, Suite 300, Reston, Virginia 22091.

2. Wholly-owed subsidiaries which will participate in the operations, and States of incorporation.

A. Lafarge Corporation/Southern Region—Maryland.

B. Gen-Tex Trucking, Inc.—Texas.

D. 1. The parent corporation, North Coast Container Corporation, an Ohio corporation is located at 8806 Crane Avenue, Cleveland, Ohio 44105.

2. S.T.C. Corporation, an Ohio corporation, shall participate in the operations.

E. 1. Parent corporation and address of principal office: Questar Corporation, 180 East First South, P.O. Box 11150, Salt Lake City, UT 84147.

2. Wholly-owned subsidiaries which will participate in the operations, and State(s) of incorporation:

(i) Mountain Fuel Resources, Inc., Utah

(ii) Wexpro Company, Utah

(iii) Celsius Energy Company, Nevada

(iv) Mountain Fuel Supply Company, Utah

Noreta R. McGee,

Secretary.

[FR Doc. 88–4152 Filed 2–25–88; 8:45 am]

BILLING CODE 7035–01–M

DEPARTMENT OF LABOR

Office of the Secretary

Agency Recordkeeping and Reporting Requirements Under Review by the Office of Management and Budget (OMB)

Background: The Department of Labor, in carrying out its responsibilities under the Paperwork Reduction Act (44 U.S.C. Chapter 35), considers comments on the reporting and recordkeeping requirements that will affect the public.

List of Recordkeeping/Reporting Requirements Under Review: As necessary, the Department of Labor will publish a list of the Agency recordkeeping/reporting requirements under review by the Office of Management and Budget (OMB) since the last list was published. The list will have all entries grouped into new collections, revisions, extensions, or reinstatements. The Departmental Clearance Officer will, upon request, be able to advise members of the public of the nature of the particular submission they are interested in. Each entry may contain the following information:

The Agnecy of the Department issuing this recordkeeping/reporting requirement.

The title of the recordkeeping/reporting requirement.

The OMB and Agency identification numbers, if applicable. How often the recordkeeping/reporting requirement is needed. Who will be required to or asked to report or keep records. Whether small businesses or organizations are affected. An estimate of the total number of hours needed to comply with the recordkeeping/reporting requirements.

The number of forms in the request for approval, if applicable.

An abstract describing the need for and uses of the information collection.

Comments and Questions: Copies of the recordkeeping/reporting requirements may be obtained by calling the Departmental Clearance Officer, Paul E. Larson, telephone (202) 523-6331. Comments and questions about the items on this list should be directed to Mr. Larson, Office of Information Management, U.S. Department of Labor, 200 Constitution Avenue NW., Room N-1301, Washington, DC 20210. Comments should also be sent to the Office of Information and Regulatory Affairs, Attn: OMB Desk Officer for (BLS/DM/ESA/ETA/OLMS/MSHA/OSHA/PWBA/VETS), Office of Managment and Budget, Room 3208, Washington, DC 20503 (Telephone (202) 395-6880).

Any member of the public who wants to comment on a recordkeeping/reporting requirement which has been submitted to OMB should advise Mr. Larson of this intent at the earliest possible date.

New

Employment and Training Administration
Unemployment Insurance Quality Control Evaluation
One-time only
State or local governments
52 respondents; 256 burden hours; no forms

This data collection supports an evaluation of the design, implementation, costs and benefits of the UI QC program. The attached instrument will be used to obtain information on QC implementation and corrective actions from 52 State Employment Security Agencies. In Addition, five SESAs will be visited to study these areas in greater depth.

New

Employment and Training Administration
Systematic Alien Verification for Entitlements (SAVE) Program
Data Collection
One-time
State or local governments
30 respondents; 300 burden hours; no forms

IRCA requires by 10/1/88, States to verify immigration status of aliens applying for UI via INS-developed verification system, unless a waiver is granted by the Secretary. To meet such determination, Secretary needs State UI data/information not currently reported or available to DOL.

Revision

Pension and Welfare Benefits Administration
Annual Return/Report of Employee Benefit Plans (Form 5500 Series)
Annually
Businesses or other for profit; Non-profit institutions; Small businesses or organizations
900,000 responses; 845,727 hours

Section 104(a)(1)(A) of ERISA requires plan administrators to file an annual report containing the information described in section 103 of ERISA. The Form 5500 Series provides a standard format for fulfilling that requirement.

Signed at Washington, DC, this 23rd day of February, 1988.

Paul E. Larson,

Departmental Clearance Officer.

[FR Doc. 88-4160 Filed 2-25-88; 8:45 am]

BILLING CODE 4510-30-M

Employment Standards Administration, Wage and Hour Division

Minimum Wages for Federal and Federally Assisted Construction; General Wage Determination; Decisions

General wage determination decisions of the Secretary of Labor are issued in accordance with applicable law and are based on the information obtained by the Department of Labor from its study of local wage conditions and data made available from other sources. They specify the basic hourly wage rates and fringe benefits which are determined to be prevailing for the described classes of laborers and mechanics employed on construction projects of a similar character and in the localities specified therein.

The determinations in these decisions of prevailing rates and fringe benefits have been made in accordance with 29 CFR Part 1, by authority of the Secretary of Labor pursuant to the provisions of the Davis-Bacon Act of March 3, 1931, as amended (46 Stat. 1494, as amended, 40 U.S.C. 276a) and of other Federal statutes referred to in 29 CFR Part 1, Appendix, as well as such additional statutes as may from time to time be enacted containing provisions for the payment of wages determined to be prevailing by the Secretary of Labor in accordance with the Davis-Bacon Act. The prevailing rates and fringe benefits determined in these decisions shall, in accordance with the provisions of the foregoing statutes, constitute the minimum wages payable on Federal and federally assisted construction projects to laborers and mechanics of the specified classes engaged on contract work of the character and in the localities described therein.

Good cause is hereby found for not utilizing notice and public comment procedure thereon prior to the issuance of these determinations as prescribed in 5 U.S.C. 553 and not providing for delay in the effective date as prescribed in that section, because the necessity to issue current construction industry wage determinations frequently and in large volume causes procedures to be impractical and contrary to the public interest.

General wage determination decisions, and modifications and supersedeas decisions thereto, contain no expiration dates and are effective from their date of notice in the **Federal Register**, or on the date written notice is received by the agency, whichever is earlier. These decisions are to be used in accordance with the provisions of 29 CFR Parts 1 and 5. Accordingly, the applicable decision, together with any modifications issued, must be made a part of every contract for performance of the described work within the geographic area indicated as required by an applicable Federal prevailing wage law and 29 CFR Part 5. The wage rates and fringe benefits, notice of which is published herein, and which are contained in the Government Printing Office (GPO) document entitled "General Wage Determinations Issued Under The Davis-Bacon And Related Acts," shall be the minimum paid by contractors and subcontractors to laborers and mechanics.

Any person, organization, or governmental agency having an interest in the rates determined as prevailing is encouraged to submit wage rate and fringe benefit information for consideration by the Department. Further information and self-explanatory forms for the purpose of submitting this data may be obtained by writing to the U.S. Department of Labor, Employment Standards Administration, Wage and Hour Division, Division of Wage Determinations, 200 Constitution Avenue, Room S-3504, Washington, DC 20210.

New General Wage Determination Decisions

The numbers of the decisions being added to the Government Printing Office document entitled "General Wage Determinations Issued Under the Davis-Bacon and Related Acts" are listed by Volume, State, and page number(s).

Volume I

Virginia:
VA88-17—pp. 1160a-1160d
VA88-18—pp. 1160e-1160h

Volume II

Minnesota:
MN88-15—pp. 580o-580z

Modifications to General Wage Determination Decisions

The numbers of the decisions listed in the Government Printing Office document entitled "General Wage Determinations Issued Under the Davis-Bacon and Related Acts" being modified are listed by Volume, State, and page number(s). Dates of publication in the **Federal Register** are in parentheses following the decisions being modified.

Volume I

District of Columbia:
DC88-1 (January 8, 1988)—pp. 83-84
Kentucky:
KY88-4 (January 8, 1988)—pp. 298-302
New York:
NY88-7 (January 8, 1988)—pp. 739-754
NY88-8 (January 8, 1988)—pp. 756-766
Listing by Location (index)—p. lix

Volume II

Indiana:
IN88-3 (January 8, 1988)—p. 267
IN88-4 (January 8, 1988)—pp. 280-281
Michigan:
MI88-4 (January 8, 1988)—p. 456
Missouri:
MO88-1 (January 8, 1988)—p. 584
MO88-6 (January 8, 1988)—p. 630
Listing by Location (index)—pp. xxxiv-xxxvi
Listing by Decision (index)—pp. lv-lviii

Volume III

None

General Wage Determination Publication

General wage determinations issued under the Davis-Bacon and related Acts, including those noted above, may be found in the Government Printing Office (GPO) document entitled "General Wage Determinations Issued Under The Davis-Bacon And Related Acts". This publication is available at each of the 50 Regional Government Depository Libraries and many of the 1,400 Government Depository Libraries across the country. Subscriptions may be purchased from: Superintendent of Documents, U.S. Government Printing Office, Washington, DC 20402, (202) 783-3238.

When ordering subscription(s), be sure to specify the State(s) of interest, since subscriptions may be ordered for any or all of the three separate volumes, arranged by State. Subscriptions include an annual edition (issued on or about January 1) which includes all current general wage determinations for the States covered by each volume. Throughout the remainder of the year, regular weekly updates will be distributed to subscribers.

Signed at Washington, DC, this 19th day of Feb. 1988.

Alan L. Moss,

Director, Division of Wage Determinations.

[FR Doc. 88-3939 Filed 2-25-88; 8:45 am]

BILLING CODE 4510-27-M

Employment and Training Administration

Determinations Regarding Eligibility To Apply for Worker Adjustment Assistance; Dana Engine Products et al.

In accordance with section 223 of the Trade Act of 1974 (19 U.S.C. 2273) the Department of Labor herein presents summaries of determinations regarding eligibility to apply for adjustment assistance issued during the period February 15, 1988-February 19, 1988.

In order for an affirmative determination to be made and a certification of eligibility to apply for adjustment assistance to be issued, each of the group eligibility requirements of section 222 of the Act must be met.

(1) That a significant number or proportion of the workers in the workers' firm, or an appropriate subdivision thereof, have become totally or partially separated,

(2) That sales or production, or both, of the firm or subdivision have decreased absolutely, and

(3) That increases of imports of articles like or directly competitive with articles produced by the firm or appropriate subdivision have contributed importantly to the separations, or threat thereof, and to the absolute decline in sales or production.

Negative Determinations

In each of the following cases the investigation revealed that criterion (3) has not been met. A survey of customers indicated that increased imports did not contribute importantly to worker separations at the firm.

TA-W-20,343; Dana Engine Products, Hagerstown, IN

TA-W-20,350; Safety Clothing & Equipment, Willoughby, OH

In the following cases the investigation revealed that criterion (3) has not been met for the reasons specified.

TA-W-20,417; T.D. Engine & Pump Service, Inc., Odessa, TX

The workers' firm does not produce an article as required for certification under section 222 of the Trade Act of 1974.

TA-W-20,400; Atlas Wireline Service, Division of Western Atlas International, Prudhoe Bay, AK

The workers' firm does not produce an article as required for certification under section 222 of the Trade Act of 1974.

TA-W-20,446; G.H. Bass & Co., Rumford Distribution Center, Rumford, ME

The workers' firm does not produce an article as required for certification under section 222 of the Trade Act of 1974.

Affirmative Determinations

TA-W-20,345; General Motors Corp., Fisher Guide Division, Columbus, OH

A certification was issued covering all workers of the firm separated on or after December 11, 1986.

TA-W-20,369; Hagales Industries, Inc., Forsyth, MO

A certification was issued covering all workers of the firm separated on or after December 17, 1986.

TA-W-20,346; Green Brook Corp., Hialeah, FL

A certification was issued covering all workers of the firm separated on or after December 9, 1986.

I hereby certify that the aforementioned determinations were issued during the period February 15, 1988-February 19, 1988. Copies of these determinations are available for inspection in Room 6434, U.S. Department of Labor, 601 D Street NW., Washington, DC 20213 during normal business hours or will be mailed to persons who write to the above address.

Dated: February 23, 1988.

Marvin M. Fooks,

Director, Office of Trade Adjustment Assistance.

[FR Doc. 88-4161 Filed 2-25-88; 8:45 am]

BILLING CODE 4510-30-M

[TA-W-19,931, TA-W-20,055 and TA-W-20,184]

General Motors Corp.; Revised Certification Regarding Eligibility To Apply for Worker Adjustment Assistance

In accordance with section 223 of the Trade Act of 1974, the Department of Labor issued Certifications Regarding Eligibility to Apply for Worker Adjustment Assistance on September 25, 1987 for workers at Central Foundry, in Defiance, Ohio (TA-W-19,931); October 15, 1987 for workers at CPC Norwood, Norwood, Ohio (TA-W-20,055) and on December 2, 1987 for workers at CPC Hamilton, Ohio (TA-W-20, 184).

Certifications for workers at the Central Foundry in Defiance, Ohio, (TA-W-19,931); CPC Norwood, Norwood, Ohio (TA-W-20,055) and CPC Hamilton, Hamilton, Ohio (TA-W-20,184) were published in the **Federal Register** on October 6, 1987 (52 FR 37381); October 27, 1987 (52 FR 41336) and December 15, 1987 (52 FR 47646), respectively.

On the basis of additional information that some workers were employed by more than one of the certified plants in the 52 weeks porior to their layoff, the Office of Trade Adjustment Assistance, on its own motion, revised the certifications to put the following plants under a single certification. This permits workers to use their combined time in adversely affected employment for establishing eligibility for trade readjustment allowance (TRA) payments.

The separate certifications applicable to GM workers at the Central Foundry, Defiance, Ohio; CPC Norwood, Norwood, Ohio and CPC Hamilton, Hamilton, Ohio are hereby revised as follows:

All workers at the following facilities of General Motors Corporation who became totally or partially separated from employment on or after the indicated impact dates are eligible to apply for adjustment assistance under Title II, Chapter 2 of the Trade Act of 1974.

TA-W-	Plant	Impact date
19,931	Central Foundry, Defiance, Ohio.	July 16, 1986.
20,055	CPC Norwood, Norwood, Ohio.	Aug. 17, 1986.
20,184	CPC Hamilton, Hamilton, Ohio.	Sept. 23, 1986.

The expiration dates in the original certifications remain unchanged.

Signed at Washington, DC, this 19th day of February 1988.

Robert O. Deslongchamps,

Director, Office of Legislation and Actuarial Services, UIS.

[FR Doc. 88-4162 Filed 2-25-88; 8:45 am]

BILLING CODE 4510-30-M

[TA-W-18,006]

Suttle Apparatus Corp.; Revised Determination on Reconsideration

The Department issued an Affirmative Determination Regarding Application for Reconsideration for former workers of the Suttle Apparatus Corporation, Lawrenceville, Illinois. The notice was published in the **Federal Register** at (52 FR 5215).

The International Association of Machinists' application for administrative reconsideration states, among other things, that the Lawrenceville facility met the decreased production and sales criterion in 1985.

On reconsideration, the Department found that the company had inadvertently submitted the wrong annual sales data for 1984 thereby showing an increase in sales for 1985. New sales data obtained on reconsideration shows a decrease in sales and production at Lawrenceville in 1985. Accordingly, company survey results show that customers who reduced purchases from Lawrenceville and increased their import purchases accounted for a major portion of the 1985 sales decline. The plant ceased production in August 1986.

U.S. imports of telephone switching equipment increased absolutely in 1985 compared to 1984.

Conclusion

After careful review of the additional facts obtained on reconsideration, it is concluded that increased imports of telephone equipment like or directly competitive with that produced at the Lawrenceville facility of Suttle Apparatus Corporation contributed importantly to the decline in production and sales and to the total or partial separation of former workers at the Lawrenceville facility of Suttle Apparatus Corporation. In accordance with the provisions of the Trade Act of 1974, I make the following revised determination:

All workers of Suttle Apparatus Corporation, Lawrenceville, Illinois engaged in employment related to the production of telephone equpment who became totally or partially separated from employment on or after July 2, 1985 and before September 1, 1986, are eligible to apply for adjustment assistance under Section 223 of the Trade Act of 1974.

Signed at Washington, DC, this 19th day of February 1988.

Carolyn M. Golding,

Director, Office of Unemployment Insurance Services.

[FR Doc. 88-4163 Filed 2-25-88; 8:45 am]

BILLING CODE 4510-30-M

Mine Safety and Health Administration

[Docket No. M-87-40-M]

Lamb Construction Co.; Petition for Modification of Application of Mandatory Safety Standard

Lamb Construction Company, P.O. Box N, Torrington, Wyoming 82240 has filed a petition to modify the application of 30 CFR 56.12028 (testing grounding systems) to its Lamb Crusher No. 1 (I.D. No. 48-01310), its Lamb Crusher No. 3 (I.D. No. 48-01312) and its Lamb Crusher No. 4 (I.D. No. 48-01374), all located in Goshen County, Wyoming. The petition is filed under section 101(c) of the Federal Mine Safety and Health Act of 1977.

A summary of the petitioner's statements follows:

1. The petition concerns the requirement that continuity and resistence of grounding systems be tested immediately after installation, repair, and modification, and annually thereafter.

2. Petitioner requests a modification of the standard as it pertains to the testing of the resistance of the grounding electrodes where the portable plants relocate.

3. In support of this request, petitioner states that—

(a) When a grounding electrode system is made, one or more of the electrodes specified below will be used. Made electrodes will be imbedded below the permanent moisture level;

(b) Made electrodes will be free from nonconductive coatings such as paint or enamel;

(c) Where more than one electrode system is used (including those used for lightning rods), each electrode of one system will not be less than 6 feet from the other electrode of another system;

(d) Rod and pipe electrodes will not be less than 8 feet in length;

(e) Electrodes of pipe of conduit will not be smaller than ¾ inch trade size and, where of iron or steel, will have the outer surface galvanized or otherwise metal-coated for corrosion protection;

(f) Electrodes of rods of steel or iron will be at least ⅝ inch in diameter.

Nonferrous rods or their equivalent will not be less than ½ inch in diameter;

(g) Where rock bottom is not encountered, the electrodes will be driven to a depth of 8 feet. Where rock bottom is encountered at a depth of less than 4 feet, electrodes not less than 8 feet long will be buried in a trench;

(h) The ground rods and associated bonds will be visually inspected for physical deterioration and mechanical bonding each time a portable operation is relocated;

(i) Annual ground bed measurements will be performed at the site when any portable plant remains in the same location for more than one calendar year; and

(j) The grounding conductor is most susceptible to breaking due to flexing and disconnecting/reconnecting during these moves. Therefore, equipment groundig conductor continuity measurements will be performed after each relocation of a portable plant.

4. Petitioner states that the proposed alternate method will provide the same degree of safety for the miners affected as that afforded by the standard.

Request for Comments

Persons interested in this petition may furnish written comments. These comments must be filed with the Office of Standards, Regulations and Variances, Mine Safety and Health Administration, Room 627, 4015 Wilson Boulevard, Arlington, Virginia 22203. All comments must be postmarked or received in that office on or before March 28, 1988. Copies of the petition are available for inspection at that address.

Patricia W. Silvey,

Director, Office of Standards, Regulations and Variances.

Date: February 18, 1988.

[FR Doc. 88-4164 Filed 2-25-88; 8:45 am]

BILLING CODE 4510-43-M

Wage and Hour Division

Certificates Authorizing The Employment of Learners at Special Minimum Wages

Notice is hereby given that pursuant to section 14 of the Fair Labor Standards Act (52 Stat. 1062, as amended; U.S.C. 214), Reorganization Plan No. 6 of 1950 (3 CFR 1949-53 Comp., p. 1004), and Administrative Order No. 1-76 (41 FR 18949), the firms listed in this notice have been issued special certificates authorizing the employment of learners at hourly wage rates lower than the minimum wage rates otherwise applicable under section 6 of the Act. The effective and expiration date, number of learners and the principal product manufactured by the establishment are as indicated. Conditions on occupations, wage rates, and learning periods which are provided in certificates issued under the supplemental industry regulations cited in the captions below are as established in those regulations.

The following certificates were issued under the apparel industry learner regulations (28 CFR 522.1 to 522.9, as amended and 522.20 to 522.25, as amended).

Flushing Shirt Mfg. Co., Inc., Frostburg, MD; 10-24-87 to 10-23-88; 10 learners for normal labor turnover purposes. (Men's shirts).

Bland Sportswear, Inc., Bland, VA; 7-24-87 to 7-23-88; 10 learners for normal labor turnover purposes. (Boy's and children's knit shirts).

The learner certificates have been issued upon the representations of the employer which, among other things, were that employment of learners at special minimum rates is necessary in order to prevent curtailment of opportunities for employment and that experienced workers for the learner occupations are not available.

The certificates may be annulled or withdrawn as indicated therein in the manner provided in 29 CFR Part 528. Any person aggrieved by the issuance of these certificates may seek a review or reconsideration thereof on or before March 14, 1988.

Signed at Washington, DC, this 19th day of February 1988.

Paula V. Smith,

Administrator.

[FR Doc. 88-4165 Filed 2-25-88; 8:45 am]

BILLING CODE 4510-27-M

NATIONAL SCIENCE FOUNDATION

Graduate Fellowship Program Review Committee; Meeting

The National Science Foundation announces the following meeting:

Name: Committee to Review the Graduate Fellowship Program.

Date and Time: March 14, 15, and 16, 1988, 8:30 to 5:00 each day.

Place:

March 14, Room 1243

March 15 and 16, Room 540-B

1800 G Street NW.

Type of Meeting: Open.

Contact Person: Dr. James Fred Hays, Senior Science, Advisor, National Science Foundation, 1800 G Street NW., Room 518, Washington, DC 20550 (202) 357-9443.

Minutes: May be obtained from contact person listed above.

Purpose of Meeting: Conduct program review of Graduate Fellowship Program and Minority Graduate Fellowship Program.

Agenda:

Monday: Hear reports from NSF staff and others on goals, history, and operation of programs.

Tuesday and Wednesday: Discussion of issues by Committee, outlining of report, writing assignments.

February 22, 1988.

M. Rebecca Winkler,

Committee Management Officer.

[FR Doc. 88-4106 Filed 2-25-88; 8:45 am]

BILLING CODE 7555-01-M

Physics Advisory Committee; Meeting

The National Science Foundation announces the following meeting:

Name: Advisory Committee for Physics; Subcommittee for the Review of the NSF Nuclear Sciences Programs.

Date and Time:

March 14, 1988, 8:30 a.m. to 6:00 p.m.

March 15, 1988, 8:30 a.m. to 6:00 p.m.

Place: Room 643B, National Science Foundation, 1800 G Street NW., Washington, DC 20550.

Type of Meeting: Closed.

Contact Person: Dr. Gerard M. Crawley, Director, Division of Physics, Room 341, National Science Foundation, Washington, DC 20550, (202) 357-7985.

Minutes: Will be part of the minutes of the full Committee meeting in May 1988.

Purpose of Meeting: To provide oversight concerning NSF support and planning for research in nuclear physics.

Agenda: Oversight review of the Nuclear Scences Programs, including examination of proposals, reviewer comments, and other privileged material.

Reason for Closing: The meeting will consist of a review of grant and declination jackets that contain the names of applicant institutions and principal investigators and privileged information contained in declined proposals. The meeting will also include a review of the peer review documentation pertaining to the applicants. These matters are within exemptions 4 and 6 of the Government in the Sunshine Act.

February 22, 1988.

M. Rebecca Winkler,

Committee Management Officer.

[FR Doc. 88-4107 Filed 2-25-88; 8:45 am]

BILLING CODE 7555-01-M

Physics Advisory Committee; Meeting

The National Science Foundation announces the following meeting:

Name: Advisory Committee for Physics; Subcommittee for the Review of the NSF Elementary Particle Physics Program.

Date and Time:

March 17, 1988, 8:30 a.m. to 6:00 p.m.

March 18, 1988, 8:30 a.m. to 6:00 p.m.

Place: Room 341, National Science Foundation, 1800 G Street NW., Washington, DC 20550

Type of Meeting: Closed.

Contact Person: Dr. Gerard M. Crawley, Director, Division of Physics, Room 341, National Science Foundation, Washington, DC 20550, (202) 357-7985.

Minutes: Will be part of the minutes of the full Committee meeting in May 1988.

Purpose of Meeting: To provide oversight concerning NSF support and planning for research in elementary particle physics.

Agenda: Oversight review of the Elementary Particle Physics Program, including examination of proposals, reviewer comments, and other privileged material.

Reason for Closing: The meeting will consist of a review of grant and declination jackets that contain the names of applicant institutions and principal investigators and privileged information contained in declined proposals. The meeting will also include a review of the peer review documentation pertaining to the applicants. These matters are within exemptions 4 and 6 of the Government in the Sunshine Act.

February 22, 1988.

M. Rebecca Winkler,

Committee Management Officer.

[FR Doc. 88-4108 Filed 2-25-88; 8:45 am]

BILLING CODE 7555-01-M

Alan T. Waterman Committee; Meeting

The National Science Foundation announces the following meeting:

Name: Alan T. Waterman Award Committee.

Date: Wednesday, March 16, 1988.

Time: 9 a.m. to 5 p.m.

Place: Room 543, National Science Foundation, 1800 G Street, NW., Washington, DC 20550.

Type of Meeting: Closed.

Contact Person: Mrs. Lois J. Hamaty, Executive Secretary, Alan T. Waterman Award Committee, National Science Foundation, Washington, DC 20550, Telephone: 202/357-7512.

Purpose of Committee: To provide advice and recommendations in the selection of the Alan T. Waterman Award recipient.

Reason for Closing: The nominations being reviewed include information of a personal nature where disclosure would constitute unwarranted invasions of personal privacy. These matters are within exemption 6 of 5 U.S.C. 552b(c), Government in the Sunshine Act.

Authority to Close Meeting: The determination made on February 1, 1988 by the Director of the National Science Foundation pursuant to the provisions of section 10(d) of Pub. L. 92-463.

M. Rebecca Winkler,

Committee Management Officer.

February 22, 1988.

[FR Doc. 88-4109 Filed 2-25-88; 8:45 am]

BILLING CODE 7555-01-M

NUCLEAR REGULATORY COMMISSION

[Docket Nos. 50-335 and 50-389]

Florida Power and Light Co. et al., St. Lucie Plant, Unit Nos. 1 and 2; Issuance of Environmental Assessment and Finding of No Significant Impact

The Nuclear Regulatory Commission (the Commission) is considering issuance of a license change to Facility Operating License NPF-16, issued to the Florida Power and Light Company, et al. (the licensee), for operation of the St. Lucie Plant, Unit No. 2, located in St. Lucie County, Florida.

Identification of the Proposed Action

The license change for the St. Lucie Plant, Unit No. 2, would permit spent fuel from Unit No. 1 to be stored in the Unit No. 2 spent fuel storage pool. The spent fuel assemblies from Unit No. 1 would be transferred one at a time in an NRC-approved shipping cask between the Unit No. 1 spent fuel pool and the Unit No. 2 spent fuel pool, a distance of approximately 300 feet. The transfer of spent fuel would take place if there is a need to completely off-load the Unit No. 1 reactor core before the licensee re-racks the Unit No. 1 spent fuel pool sometime in mid-1988, the next refueling outage. The transfer of spent fuel would also take place if the licensee cannot re-rack the pool before mid-1988 because additional spent fuel will be in the pool at that time and the licensee is not allowed to carry loads in excess of 2,000 pounds (e.g., rack over spent fuel. The Unit No. 1 spent fuel pool does not have enough space at the present time for a Unit 1 reactor core off-load. The proposed license change is responsive to the licensee's application dated July 2, 1986, as supplemented by letters dated February 6 and 9, March 2 and 27, and April 28, 1987. The Commission's staff has prepared an Environmental Assessment of the proposed action, "Environmental Assessment by the Office of Nuclear Reactor Regulation Relating to the Transfer of Unit No. 1 Spent Fuel between Units No. 1 and No. 2 of the St. Lucie Plant, Facility Operating License Nos. DPR-67 and NPF-16, Florida Power and Light Company, et al., St. Lucie Plant, Unit Nos. 1 and 2, Docket Nos. 50-335 and 50-389," dated February 22, 1988.

Summary of Environmental Assessment

The Commission's staff has reviewed the potential environmental impact of the proposed license change to transfer Unit No. 1 spent fuel between the St. Lucie Plant Units. This evaluation considered the previous environmental studies, including the "Final Environmental Statement Relating to the Operation of St. Lucie Plant, Unit No. 1," dated June 1973, and the "Final Environmental Statement Relating to Operation of the St. Lucie Plant, Unit No. 2," dated April 1982.

The proposed amendment would not alter the type or amount of fuel that can be received, used, and possessed at the site. Limitations on the amount of fuel that may be stored in the Unit No. 2 spent fuel pool and the manner in which it may be stored and handled would also not be changed. Only the Unit No. 1 spent fuel that has been sufficiently aged would be transferred and an NRC-approved shipping cask would be used to transfer the fuel between units. The only potential radiological environmental impacts that are affected deal with occupational and public radiation exposure.

Radiological Impacts

The occupational exposure for the proposed transfer operation is estimated to be less than 0.4 person-rems per spent fuel assembly. Based on present and projected operations, the staff estimated that the proposed transfer of Unit No. 1 spent fuel between the units should only add a small fraction to the total annual occupational radiation dose at the facility. The total occupational dose for 1984 and 1985 at the site was approximately 1304 person-rems per year. Thus, the staff concluded that the proposed transfer of spent fuel will not result in any significant increase in doses received by workers.

10 CFR 71.43 provides that a package (shipping cask) must be designed, constructed, and prepared for shipment so that under specified tests for normal

conditions of operation, there will be no loss or dispersal of radioactive contents, no significant increase in external radiation levels, and no substantial reduction in the effectiveness of the packaging.

10 CFR 71.47 provides that radiation levels external to the package must not exceed 10 millirem/hour at any point two meters beyond the outermost sides of the transporting vehicles. For a cask meeting this criterion, the corresponding dose rate is approximately 0.0001 millirem/hour at the nearest site boundary.

The staff estimated the annual total dose commitment to a maximally exposed individual at the nearest site boundary due to the proposed transfer of spent fuel, and found it to be within the limitation of the plant Technical Specifications which are based on the offsite dose requirements of 10 CFR Parts 20 and 50 and 40 CFR Part 190. Likewise, the staff estimated that the annual population dose to the general public due to the propsed transfer would be a small fraction of the three person-rem population dose estimated in the Unit Nos. 1 and 2 Final Environmental Statements for all transportation of fuel and waste to and from a nuclear power reactor. The estimated annual total population dose including the proposed transfer of spent fuel would be very small compared to the annual dose to this same population from background radiation. Thus, the staff concluded that the proposed transfer of spent fuel would not result in any significant increase in doses received by the public.

The staff has also reviewed the potential consequences of three postulated design basis accidents which involve spent fuel. These accidents are the fuel handling, cask drop, and cask transport accidents. The previous evaluations of the fuel handling and cask drop accidents do not require reevaluation because the operations potentially involved with these accidents are not modified by the proposed license amendment. However, the staff reevalauted the single fuel assembly cask transport accident. The calculated doses are well below the guidelines stated in 10 CFR Part 100. Thus, the staff concluded that the consequences of postulated design basis accidents for the spent fuel transfer are acceptable.

Non-Radiological Impacts

The staff has evaluated the potential non-radiological environmental impacts associated with the proposed spent fuel transfer and concluded that they are not significant. The Commission has concluded that the proposed license change would not cause a significant increase in the impact to the environment and will not change any conclusions reached by the Commission in the Final Environmental Statement for each unit.

Finding of No Significant Impact

The Commission's staff has reviewed the proposed license change to transfer the spent fuel between the units relative to the requirements set forth in 10 CFR Part 51. Based upon the environmental assessment, the staff concluded that there are no significant radiological or non-radiological impacts associated with the proposed action and that the proposed license change would not have a significant effect on the quality of the human environment. Therefore, the Commission has determined, pursuant to 10 CFR 51.31, not to prepare an environmental impact statement for the proposed license change.

For further details with respect to this action, see (1) the application for license change dated July 2, 1986, as supplemented February 6 and 9, March 2 and 27 and April 28, 1987, (2) the "Final Environmental Statement Relating to the Operation of the St. Lucie Plant, Unit No. 1," dated June 1973, (3) the "Final Environmental Statement Relating to the Operation of the St. Lucie Plant, Unit No. 2," dated April 1982, and (4) the Environmental Assessment dated February 22, 1988. These documents are available for public inspection at the Commission's Public Document Room, 1717 H Street, Washington, DC 20555, and at the Indian River Junior College Library, 3209 Virginia Avenue, Ft. Pierce, Florida.

Dated at Rockville, Maryland, this 22nd day of February, 1988.

For the Nuclear Regulatory Commission.

Herbert N. Berkow,

Director, Project Directorate II-2, Division of Reactor Projects-I/II, Office of Nuclear Reactor Regulation.

[FR Doc. 88-4112 Filed 2-25-88; 8:45 am]

BILLING CODE 7590-01-M

SECURITIES AND EXCHANGE COMMISSION

[Release No. 34-25377; File No. SR-NASD-87-50]

Proposed Rule Change by National Association of Securities Dealers, Inc.

In the matter of Self-Regulatory Organizations; National Association of Securities Dealers, Inc.; Proposed Rule Change Relating to a New Registration Category for Corporate Securities Limited Representatives and Specifications and Study Outline for the Corporate Securities Limited Representative Examination.

Pursuant to section 19(b)(1) of the Securities Exchange Act of 1934, 15 U.S.C. 78s(b)(1), notice is hereby given that on November 2, 1987, the National Association of Securities Dealers, Inc. filed with the Securities and Exchange Commission the proposed rule change as described in Items I, II, and III, below, which Items have been prepared by the self-regulatory organization. The Commission is publishing this notice to solicit comments on the proposed rule change from interested persons.

I. Self-Regulatory Organization's Statement of the Terms of Substance of the Proposed Rule Change

The proposed rule change amends Schedule C, Parts II and III, of the NASD By-Laws and creates a new registration category for Corporate Securities Limited Representatives.

The NASD has filed specifications and a study outline for the Corporate Securities Limited Representative (Series 62) examination administered by the NASD.

II. Self-Regulatory Organization's Statement of the Purpose of, and Statutory Basis for, the Proposed Rule Change

In its filing with the Commission, the self-regulatory organization included statements concerning the purpose of and basis for the proposed rule change and discussed any comments it received on the proposed rule change. The text of these statements may be examined at the places specified in Item IV below. The self-regulatory organization has prepared summaries, set forth in sections (A), (B) and (C) below of the most significant aspects of such statements.

(A) *Self-Regulatory Organization's Statement of Purpose of, and Statutory Basis for, the Proposed Rule Change*

It is the NASD's responsibility under section 15A(g)(3) of the Securities Exchange Act of 1934 ("the Act") to prescribe standards of training, experience and competence for persons associated with NASD members. Pursuant to this statutory obligation, the NASD has developed examinations that are administered to ensure that persons associated with NASD members have attained specified levels of competence and knowledge.

The proposed Corporate Securities Limited Representative registration category is a continuation of the existing system of limited representative registrations for investment company

products/variable contracts, direct participation programs, and municipal securities. Under the proposed amendments to Schedule C, a Series 62-Corporate Securities Limited Representative would be able to transact a member's business in the following products: common and preferred stocks, corporate bonds, stock rights, warrants, foreign securities, ADRs, shares of closed-end investment companies and money market funds, privately issued mortgage-backed securities, other asset-backed securities, and REITs. Registration in this category alone would not allow a representative to transact a member's business in municipal securities, direct participation programs, redeemable securities of companies registered under the Investment Company Act of 1940, variable contracts, or options. Representatives seeking to transact business in these latter products would have to register in one or more of the NASD's limited representative categories, or as General Securities Registered Representatives.

NASD members have indicated a need for qualification tests that reflect the various product markets in the industry, and it is expected that a corporate securities registration category will apply broadly to many member firms.

The NASD wishes to point out that nothing in this proposal would affect a member's ability to require its associated persons to qualify as Series 7—General Securities Representatives as a matter of firm policy. The Series 62—Corporate Securities Limited Representative Examination, either alone or in conjunction with other limited representative examinations, is intended to provide greater flexibility to members in qualifying their personnel, while still maintaining the necessary investor protection afforded by the NASD's qualification programs. The Series 62—Corporate Securities Limited Representative Examination, like the other limited examinations, would be administered on a regular basis using an automated testing system.

(B) *Self-Regulatory Organization's Statement on Burden on Competition*

The NASD does not believe that the new registration category, Corporate Securities Limited Representative, specifications, study outline, or Series 62 examination will impose any burden on competition that is not necessary or appropriate in furtherance of the purposes of the Act.

(C) *Self-Regulatory Organization's Statement on Comments on the Proposed Rule Change Received from Members, Participants, or Others*

The NASD solicited comments on the proposed rule change in Notice to Members 87-39. A total of 57 responses were received. Of these 39 (68%) expressed general agreement with the proposed amendment and 18 (32%) expressed opposition. Copies of the Notice to Members and comment letters are attached as Exhibit 1 to this filing.

Those commentators in favor of the proposed rule change supported the proposal for the following reasons:

1. It offers associated persons and their firms more flexibility in choosing which registration category those people will be qualified under;
2. It allows firms to match registration categories with the type of business the firm or the individual does; and
3. Many of these commentators did not believe their new registration category would lessen qualification standards in the securities industry.

Those commentators opposed to the proposed rule change gave the following reasons for their opposition:

1. The new category would lessen qualification standards in the industry;
2. It would make supervision more difficult because certain securities products are difficult to classify between "qualified" and "non-qualified" for this registration category; and
3. The investing public could easily become confused over what products a particular associated person could offer them.

III. Date of Effectiveness of the Proposed Rule Change and Timing for Commission Action

Within 35 days of the date of publication of this notice in the **Federal Register** or within such longer period (i) as the Commission may designate up to 90 days of such date if it finds such longer period to be appropriate and publishes its reasons for so finding or (ii) as to which the self-regulatory organization consents, the Commission will:

(A) By order approve such proposed rule change, or

(b) Institute proceedings to determine whether the proposed rule change should be disapproved.

IV. Solicitation of Comments

Interested persons are invited to submit written data, views and arguments concerning the foregoing. Persons making written submissions should file six copies thereof with the Secretary, Securities and Exchange Commission, 450 Fifth Street NW., Washington, DC 20549. Copies of the submissions, all subsequent amendments, all written statements with respect to the proposed rule change that are filed with the Commission, and all written communications relating to the proposed rule change between the Commission and any person, other than those that may be withheld from the public in accordance with the provisions of 5 U.S.C. 552 will be available for inspection and copying in the Commission's Public Reference Room. Copies of the filing will also be available for inspection and copying at the principal office of the NASD. All submissions should refer to file number SR-NASD-87-50 and should be submitted by March 18, 1988.

For the Commission, by the Division of Market Regulation, pursuant to delegated authority, 17 CFR 200.30-3(a)(12).

Jonathan Katz,

Secretary.

Dated: February 22, 1988.

[FR Doc. 88-4177 Filed 2-25-88; 8:45 am]

BILLING CODE 8010-01-M

[Release No. 34-25378; File No. SR-NASD-87-42]

Proposed Rule Change by National Association of Securities Dealers, Inc.

In the Matter of Self-Regulatory Organizations; Proposed Rule Change by National Association of Securities Dealers, Inc., Relating to Proposed Amendments to Article V, Part A of the NASD's Code of Procedure Establishing Procedures for the Imposition of Remedial Business Limitations for Members Firms in or Approaching Financial or Operational Difficulty.

Pursuant to section 19(b)(1) of the Securities Exchange Act of 1934, 15 U.S.C. 78s(b)(1), notice is hereby given that on October 14, 1987, the National Association of Securities Dealers, Inc. ("NASD" or "Association") filed with the Securities and Exchange Commission the proposed rule change as described in Items I, II, and III below which Items have been prepared by the NASD. The Commission is publishing this notice to solicit comments on the proposed rule change from interested persons.

I. Self-Regulatory Organization's Statement of the Terms of Substance of the Proposed Rule change

Article III, Section 38 of the NASD's Rules of Fair Practice provides for the imposition of remedial business limitations upon member firms in or approaching financial or operational difficulty. The procedures implementing

the substantive provisions of Article III, Section 38 are set forth in Article V, Part A of the NASD's Code of Procedure. The proposed amendments to these procedures would modify the criteria for the selection of members and the composition of District Surveillance Committee ("DSCs"), permit DSCs to appoint subcommittees to hear proceedings, and provide for terms of office of up to three years for DSC members. Whereas Section 2 of Article V now prescribes 5-member DSCs, the proposed amendments would provide for DSCs of *at least* 5 members. Further, the proposed amendments would eliminate the requirement that DSCs be composed of persons who are currently members of a surveillance committee. Under the proposed rule, each DSC will consist of current members of the District Committee and/or persons who have been members of a District Committee of the NASD Board of Governors within the last five years. In addition, the proposed amendments would provide for a hearing prior to the imposition of sanctions for failure to comply with limitations imposed by DSCs.

II. Self-Regulatory Organization's Statement of the Purpose of, and Statutory Basis for, the Proposed Rule Change

In its filing with the Commission, the NASD included statements concerning the purpose of, and basis for, the proposed rule change and discussed any comments it received on the proposed rule change. The text of these statements may be examined at the places specified in Item IV below. The NASD has prepared summaries, set forth in Sections (A), (B), and (C) below, of the most significant aspects of such statements.

A. *Self-Regulatory Organization's Statement of the Purpose of, and Statutory Basis for, the Proposed Rule Change*

Article III, Section 38 of the NASD's Rules of Fair Practice provides for the imposition of remedial business limitations upon member firms in or approaching financial or operational difficulty. The procedures implementing the substantive provisions of Article III, Section 38 are set forth is Article V, Part A of the NASD's Code of Procedure. The proposed amendments to these procedures would modify the criteria of the selection of members and the composition of District Surveillance Committees ("DSCs") in order to draw upon an expanded pool of industry personnel experienced in broker/dealer operations and provide for pre-established terms of office of up to three years for DSC members. The proposed amendments would also permit DSCs to appoint subcommittees of at least two DSC members to hear business limitation proceedings. The amendments require that the DSC hold a hearing within 5 business days of the DSC's receipt of the request for hearing, rather than 5 business days from the member's receipt of the notice of limitations, as the current rule prescribes. Further, the amendments provide that, where a hearing is not requested, the limitations contained in the notice go into effect "3 *business* days" after the member receives the notice, rather than "3 days" after the member receives the notice, as the current rule provides. In addition, the proposed amendments would provide for notice and an opportunity for an affected member broker/dealer to be heard prior to the imposition of sanctions for failure to comply with limitations imposed by DSCs, a procedural improvement intended to enhance the quality of the DSC's decisional process in these matters.

The proposed amendments are consistent with the provisions of section 15A(b)(2) of the Securities Exchange Act of 1934, in that they enable the NASD more effectively to enforce compliance with its rules, on the basis that the proposed amendments clarify minor ambiguities in the present procedural scheme, provide for notice and an opportunity to be hear prior to the imposition of sanctions for failure to comply with previously imposed business limitations, and enhance the DSC's ability to detect and to respond effectively to financial and operational difficulties experienced by member broker/dealers.

B. *Self-Regulatory Organization's Statement on Burden on Competition*

The Association believes that the proposed rule change does not impose any burden on competition not necessary or appropriate in furtherance of the purposes of the Act.

C. *Self-Regulatory Organization's Statement on Comments on the Proposed Rule Change Received from Members, Participants, or Others*

No written comments were either solicited or received.

III. *Date of Effectiveness of the Proposed Rule Change and Timing for Commission Action*

Within 35 days of the date publication of this notice in the **Federal Register** or within such longer period (i) as the Commission may designate up to 90 days of such date if it finds such longer period to be appropriate and publishes its reasons for so finding or (ii) as to which the self-regulatory organization consents, the Commission will:

A. By order approve such proposed rule change, or

B. Institute proceedings to determine whether the proposed rule change should be disapproved.

VI. Solicitation of Comments

Interested persons are invited to submit written data, and arguments concerning the foregoing. Persons making written submissions should file six copies thereof with the Secretary, Securities and Exchange Commission, 450 Fifth Street, NW., Washington, DC 20549. Copies of the submissions, all subsequent amendments, all written statements with respect to the proposed rule change that are filed with the Commission, and all written communications relating to the proposed rule change between the Commission and any person, other than those that may he withheld from the public in accordance with the provisions of 5 U.S.C. 552, will be available for inspection and copying in the Commission's Public Reference Room at the above address. Copies of such filing will also be available for inspection and copying at the principal office of the NASD. All submissions should refer to the file number in the caption above and should be submitted by March 18, 1988.

For the Commission, by the Division of Market Regulation, pursuant to delegated authority, 17 CFR 200.30-3(a)(12).

Jonathan G. Katz,

Secretary.

Dated: February 22, 1988.

[FR Doc. 88-4178 Filed 2-25-88; 8:45 am]

BILLING CODE 8010-01-M

[Release No. IC-16281; 812-6979]

MassMutual Liquid Assets Trust and MML Investors Services, Inc.; Application

February 22, 1988.

AGENCY: Securities and Exchange Commission ("SEC").

ACTION: Notice of Application for Approval of Certain Offers of Exchange under the Investment Company Act of 1940 (the "1940 Act").

Applicants: MassMutual Liquid Assets Trust (the "Trust") and MML Investors Services, Inc. ("MML").

Relevant 1940 Act Section: Approval requested under section 11(a).

Summary of Application: Applicants seek an order to permit certain proposed

offers of exchange of shares among the various series of the Trust ("Fund or Funds") on a basis other than their respective net asset value per share at the time of exchange. Applicants request that any order issued in response to this application be applicable to any series of the Trust and to any other investment company (or series thereof) ("Additional Funds") not yet in existence for which MML in the future may serve as distributor.

Filing Dates: The application was filed on February 1, 1988 and amended on February 19, 1988.

Hearing or Notification of Hearing: If no hearing is ordered, the application will be granted. Any interested person may request a hearing on this application, or ask to be notified if a hearing is ordered. Any requests must be received by the SEC by 5:30 p.m., on March 14, 1988. Request a hearing in writing, giving the nature of your interest, the reason for the request, and the issues you contest. Serve the Applicants with the request, either personally or by mail, and also send it to the Secretary of the SEC, along with proof of service by affidavit, or, for lawyers, by certificate. Request notification of the date of a hearing by writing to the Secretary of the SEC.

Addresses: Secretary, SEC, 450 5th Street NW, Washington, DC 20549. Applicants, 1295 State Street, B233, Springfield, MA 01111.

For Further Information Contact: Paul J. Heaney, Financial Analyst (202) 272-2847 or Brion R. Thompson, Special Counsel (202) 272-3016 (Division of Investment Management).

Supplementary Information: Following is a summary of the application; the complete application is available for a fee from either the SEC's Public Reference Branch in person or the SEC's commercial copier who can be contacted at (800) 231-3282 (in Maryland (301) 258-4300).

Applicants' Representation

1. The Trust is registered as an open-end, diversified management, series investment company under the 1940 Act. MML is the principal underwriter of shares of the Trust and is registered as a broker-dealer under the Securities Exchange Act of 1934. MML may, in the future, serve as distributor for Additional Funds which MML may wish to include in the exchange program.

2. It is proposed that (i) certain series of the Trust will be offered at their relative net asset values without the payment of any sales charge ("No-Load Funds"), (ii) certain series of the Trust will be offered at their relative net asset values plus a sales charge ("Load Funds") and (iii) certain series of the Trust will be offered at their relative net asset values plus a sales charge which is generally less than the corresponding charge for the Load Funds ("Reduced Load Funds").

3. The public offering price for the Load Funds is the net asset value next determined after a purchase order becomes effective plus a proposed sales charge of up to 4.5% of the amount of the purchase. The public offering price for the Reduced Load Funds is the net asset value next determined after a purchase order becomes effective plus a proposed sales charge of up to 2.5% of the amount of the purchase. From time to time, the sales charge applicable to one or more of the Funds may change. MML may from time to time also act as principal underwriter for certain Additional Funds which at such time may be considered Loans Funds, Reduced Load Funds or No-Load Funds, as the case may be. Additional Funds which are Reduced Load Funds may have a sales charge which is generally higher or lower than existing Reduced Load Funds.

4. The terms of the proposed exchange program are as follows:

(a) Shares of a Load Fund may be exchanged for shares of any other Load Fund, any Reduced Load Fund or any No-Load Fund at the relative net asset value per share at the time of the exchange. After the first exchange of shares of a Load Fund for shares of a Reduced Load Fund or a No-Load Fund, the shares in such Reduced Load or No-Load Fund acquired by an exchange from a Load Fund may be exchanged for shares of any Load Fund on the basis of relative net asset values of the shares at the time of the subsequent exchange.

(b) Shares of a Reduced Load Fund may be exchanged for shares of any other Reduced Load Fund or any No-Load Fund at relative net asset values at the time of the exchange. Shares of a Reduced Load Fund may be exchanged for shares of any Load Fund at relative net asset values at the time of the exchange plus a sales charge equal to the difference between the applicable sales charge equal to the difference between the applicable sales charge assessed by the Load Fund and the sales charge already assessed by the Reduced Load Fund, except where the shares of the Reduced Load Fund were themselves acquired by an exchange from a Load Fund.

(c) Shares of a No-Load Fund may be exchanged for shares of any other No-Load Fund at the relative net asset values at the time of the exchange. Shares of a No-Load Fund may be exchanged for shares of a Reduced Load Fund or a Load Fund at the relative net asset values at the time of the exchange plus a sales charge equal to the applicable sales charge assessed by the Reduced Load Fund or the Load Fund, except (i) where the shares of the No-Load Fund were themselves acquired by an exchange from a Reduced Load Fund in which case the exchange will be made at the relative net asset values at the time of the exchange plus a sales charge equal to the difference between the applicable sales charge assessed by the Load Fund and the Reduced Load Fund and (ii) where the shares of the No-Load Fund were themselves acquired by an exchange from a Load Fund in which case the exchange will be made at the relative net asset values at the time of the exchange.

5. In the case of an exchange of shares among the Funds, the sales charge assessed with respect to the acquired Fund will be no greater than the excess, if any, of the sales charge applicable to that Fund in the absence of an exchange over any sales charge previously assessed on the exchanged Fund.

6. In each of the exchanges described above, shares acquired through reinvestment of dividends and capital gains distributions will not be subject to a sales load. The foregoing exchange transactions are subject to the minimum initial investment required by each Fund. In the event that a sales charge is imposed on an exchange, any provisions as described in the prospectus of the Trust allowing for a reduced sales charge will be considered in determining the sales charge, if any, applicable to the exchange.

7. Each exchange of shares will be subject to a nominal administration fee of five dollars payable to the applicable Fund from which the exchange was made which will be applied uniformly to all offerees. The fee is designed to defray administrative expenses in connection with effecting exchanges. Shareholders will be notified of the exchange privilege and the administration fee by means of the prospectus of the Trust and in other communications that describe the exchange program.

Applicants' Legal Conclusions

1. The purpose of the Applicants' proposed exchange program is to permit a shareholder of any Fund to exchange, in a simple transaction, his Fund shares for shares of any other Fund on a fair and equitable basis when market, tax considerations or changes in the shareholder's investment objectives warrant such an exchange. Also, the proposed exchange program is intended

to treat shareholders exchanging into a Fund and its existing shareholders equitably, without disrupting the distribution system of the Applicants.

2. The proposed exchange program is appropriate and in the public interest, is consistent with the protection of investors and is consistent with the purposes fairly intended by the policy and provisions of the 1940 Act.

Applicants' Conditions

If the requested order is granted, Applicants agree to the following conditions:

1. Applicants will comply with the provisions of proposed Rule 11a-3 under the 1940 Act if and when it is adopted by the SEC.

2. Applicants undertake to limit any future offers of exchange involving any Additional Funds to the terms and conditions described in this application.

For the SEC, by the Division of Investment Management, under delegated authority.

Jonathan G. Katz,

Secretary.

[FR Doc. 88-4179 Filed 2-25-88; 8:45 am]

BILLING CODE 8010-01-M

DEPARTMENT OF TRANSPORTATION

Aviation Proceedings; Agreements Filed During the Week Ending February 19, 1988

The following agreements were filed with the Department of Transportation under the provisions of 49 U.S.C. 408, 409, 412, and 414. Answers may be filed within 21 days of date of filing.

Docket No. 45453

Parties: Members of International Air Transport Association
Date Filed: February 19, 1988
Subject: Atlantic Add-on Amounts
Proposed Effective Date: April 1, 1988

Docket No. 45454

Parties: Members of International Air Transport Association
Date Filed: February 19, 1988
Subject: U.S.-Europe Passenger Fares
Proposed Effective Date: April 1, 1988

Docket No. 45455

Parties: Members of International Air Transport Association
Date Filed: February 19, 1988
Subject: Within South America Fares
Proposed Effective Date: April 1, 1988

Docket No. 45456

Parties: Members of International Air Transport Association
Date Filed: February 19, 1988
Subject: Within Africa Fares
Proposed Effective Date: April 1, 1988

Phyllis T. Kaylor,

Chief, Documentary Services Division.

[FR Doc. 88-4180 Filed 2-25-88; 8:45 am]

BILLING CODE 4910-62-M

Applications for Certificates of Public Convenience and Necessity and Foreign Air Carrier Permits Filed Under Subpart Q During the Week Ended February 19, 1988

The following applications for certificates of public convenience and necessity and foreign air carrier permits were filed under Subpart Q of the Department of Transportation's Procedural Regulations (See 14 CFR 302.1701 *et. seq.*). The due date for answers, conforming application, or motion to modify scope are set forth below for each application. Following the answer period DOT may process the application by expedited procedures. Such procedures may consist of the adoption of a show-cause order, a tentative order, or in appropriate cases a final order without further proceedings.

Docket No. 45449

Date Filed: February 16, 1988
Due Date for Answers, Conforming Applications, or Motion to Modify Scope: March 15, 1988
Description: Application of United Air Lines, Inc., pursuant to section 401 of the Act and Subpart Q of the Regulations requests a certificate of public convenience and necessity in order to provide round-trip foreign air transportation of passengers, property, and mail between the United States and Bermuda.

Phyllis T. Kaylor,

Chief, Documentary Services Division.

[FR Doc. 88-4181 Filed 2-25-88; 8:45 am]

BILLING CODE 4910-62-M

Minority Business Resource Center Advisory Committee; Meeting

Pursuant to section 10(a)(2) of the Federal Advisory Committee Act (Pub. L. 92-463; 5 U.S.C. App. 1), notice is hereby given of a meeting of the Minority Business Resource Center Advisory Committee to be held Monday, March 28, 1988, at 5:30 p.m. at the Hyatt Regency at Civic Plaza, Russell Room, 122 N. 2nd St. at Civic Plaza, Phoenix, AZ 85004. The agenda for the meeting is as follows:

—Women Business Enterprise Nationwide Outreach Progam.

—Maritime Program.

—Procurement Goals: FY 1987 Achievements.

—Update on the Short-term Loan & Bonding Assistance Programs.

Attendance is open to the interested public but limited to the space available. With the approval of the Chairman, members of the public may present oral statements at the meeting. Persons wishing to attend and persons wishing to present oral statements should notify the Minority Business Resource Center not later than the day before the meeting. Information pertaining to the meeting may be obtained from Ms. Josie Graziadio, Office of Small and Disadvantaged Business Utilization, 400 7th Street SW., Washington, DC 20590, telephone (202) 366-1930. Any member of the public may present a written statement to the Committee at any time.

Issued in Washington, DC, on February 23, 1988.

Amparo B. Bouchey,

Acting Director, Office of Small and Disadvantaged Business Utilization.

[FR Doc. 88-4182 Filed 2-25-88; 8:45 am]

BILLING CODE 4910-62-M

Federal Aviation Administration

Advisory Circular 25-12, Airworthiness Criteria for the Approval of Airborne Windshear Warning Systems in Transport Category Airplanes

AGENCY: Federal Aviation Administration (FAA), DOT.

ACTION: Notice of issuance of advisory circular.

SUMMARY: This notice announces the issuances of the subject advisory circular which provides guidance concerning the airworthiness approval of airborne windshear warning systems in transport category airplanes.

DATE: Advisory Circular 25-12 was issued by the FAA, Aircraft Certification Division, in Seattle, WA, on November 2, 1987.

How To Obtain Copies: A copy of AC 24-12 may be obtained by writing to the U.S. Department of Transportation, M-443.2, Subsequent Distribution Unit, Washington, DC 20590.

Issued in Seattle, Washington, on February 11, 1988.

Leroy A. Keith,

Manager, Aircraft Certification Division, Northwest Mountain Region.

[FR Doc. 88-4086 Filed 2-25-88; 8:45 am]

BILLING CODE 4910-13-M

Radio Technical Commission for Aeronautics (RTCA) Special Committee 150—Minimum System Performance Standards for Vertical Separation Above Flight Level 290; Eighteenth Meeting

Pursuant to section 10(a) (2) of the Federal Advisory Committee Act (Pub. L. 92–463; 5 U.S.C. App. I) notice is hereby given of a meeting of RTCA Special Committee 150 on Minimum System Performance Standards for Vertical Separation above Flight Level 290 to be held on March 23–25, 1988, in the RTCA Conference Room, One McPherson Square, 1425 K Street, NW., Suite 500, Washington, DC, commencing at 9:30 a.m.

The Agenda for this meeting is as follows: (1) Chairman's remarks; (2) Approval of the 17th meeting minutes; (3) Review and Discuss EUROCAE Working Group 30 activities; (4) Working Group reports; (5) FAA Technical Center data analysis update; (6) Update on related activities; (7) Resolution of MSPS issues; (8) Review of 5th draft of MSPS; (9) Other business; (10) Date and place of next meeting.

Attendance is open to the interested public but limited to space available. With the approval of the Chairman, members of the public may present oral statements at the meeting. Persons wishing to present statements or obtain information should contact the RTCA Secretariat, One McPherson Square, 1425 K Street, NW., Suite 500, Washington, DC 20005; (202) 682–0266. Any member of the public may present a written statement to the committee at any time.

Issued in Washington, DC, on February 19, 1988.

Herbert P. Goldstein,

Designated Officer.

[FR Doc. 88–4076 Filed 2–25–88; 8:45 am]

BILLING CODE 4910–13–M

Saint Lawrence Seaway Development Corporation

Advisory Board; Meeting

Pursuant to section 10(a)(2) of the Federal Advisory Committee Act (Pub. L. 92–463; 5 U.S.C. App. I) notice is hereby given to a meeting of the Advisory Board of the Saint Lawrence Seaway Development Corporation, to be held at 1:00 p.m., March 24, 1988, at the Corporation's Administration Headquarters, Room 5424, 400 Seventh St. SW., Washington, DC. The agenda for this meeting will be as follows: Opening Remarks, Consideration of Minutes of Past Meeting; Review of Programs; Business, Closing Remarks.

Attendance at meeting is open to the interested public but limited to the space available. With the approval of the Administrator, members of the public may present oral statements at the meeting. Persons wishing further information should contact not later than March 18, 1988, Joan C. Hall, Advisory Board Liaison, Saint Lawrence Seaway Development Corporation, 400 Seventh Street SW., Washington, DC 20590; 202/366–0118.

Any member of the public may present a written statement to the Advisory Board at any time.

Issued at Washington, DC, on February 22, 1988.

Joan C. Hall

Advisory Board Liaison.

[FR Doc. 88–4122 Filed 2–25–88; 8:45 am]

BILLING CODE 4910–61–M

DEPARTMENT OF THE TREASURY

Public Information Collection Requirements Submitted to OMB for Review

DATE: February 19, 1988.

The Department of Treasury has submitted the following public information collection requirement(s) to OMB for review and clearance under the Paperwork Reduction Act of 1980, Pub. L. 96–511. Copies of the submission(s) may be obtained by calling the Treasury Bureau Clearance Officer listed. Comments to the OMB reviewer listed and to the Treasury Department Clearance Officer, Department of the Treasury, Room 2224, 15th and Pennsylvania Avenue NW., Washington, DC 20220.

Bureau of Alcohol, Tobacco and Firearms

OMB Number: 1512–0075
Form Number: ATF F 5150.18
Type of Review: Extension
Title: User's Report of Denatured Spirits
Description: The information on ATF F 5150.18 is used to pinpoint unusual activities in the use of specially denatured spirits. The form shows a summary of activities at permits premises. ATF examines and verifies certain entries on these reports to identify unusual activities, errors and omissions.
Respondents: Businesses or other for-profit, Small businesses or organizations
Estimated Burden: 824 hours

OMB Number: 1512–0379
Form Number: ATF REC 5530/2
Type of Review: Extension
Title: Manufacturers of Nonbeverage Products—Records to Support Claims for Drawback
Description: Data required to be maintained by manufacturers of nonbeverage products are used to verify claims for drawback of taxes and hence, protect the revenue. Maintains accountability; allows tracing of spirits by audit.
Respondents: Businesses or other for-profit, Small businesses or organizations
Estimated Burden: 16,497 hours
Clearance Officer: Robert Masarsky, (202) 566–7077, Bureau of Alcohol, Tobacco and Firearms, Room 7011, 1200 Pennsylvania Avenue NW., Washington, DC 20226.
OMB Reviewer: Milo Sunderhauf, (202) 395–6880, Office of Management and Budget, Room 3208, New Executive Office Building, Washington, DC 20503.

Dale A. Morgan,

Departmental Reports Management Officer.

[FR Doc. 88–4100 Filed 2–25–88; 8:45 am]

BILLING CODE 4810–25–M

VETERANS ADMINISTRATION

Commission To Assess Veterans' Education Policy; Open Meeting

The Veterans Administration gives notice that a meeting of the Commission to Assess Veterans' Education Policy, authorized by section 320 of Pub. L. 99–576, will be held in Suite 300 of the Postal Rate Commission, 1333 H Street,

NW., Washington, DC 20268, on March 29, 1988, at 9 a.m. The purpose of this meeting will be to review various aspects of the administration of veterans' education programs for the purposes of making recommendations to the Administrator and the Congress as the Commission determines appropriate.

The meeting will be open to the public. Those wishing to attend should contract Ms. Babette V. Polzer, Executive Director, Commission to Assess Veterans' Education Policy (phone: (202) 233-2026) prior to March 24, 1988.

Interested persons may attend or submit prepared statements for the Commission. Statements may be filed with the Executive Director for the Commission, c/o the Veterans Administration (226D), 810 Vermont Avenue NW., Room 427-D, Washington, DC 20420.

Dated: February 22, 1988.

By direction of the Administrator.

Rosa Maria Fontanez,

Committee Management Officer.

[FR Doc. 88-4155 Filed 2-25-88; 8:45 am]

BILLING CODE 8320-01-M

Sunshine Act Meetings

Federal Register
Vol. 53, No. 38
Friday, February 26, 1988

This section of the FEDERAL REGISTER contains notices of meetings published under the "Government in the Sunshine Act" (Pub. L. 94-409) 5 U.S.C. 552b(e)(3).

EQUAL EMPLOYMENT OPPORTUNITY COMMISSION

"FEDERAL REGISTER" CITATION OF PREVIOUS ANNOUNCEMENT: 53 FR 5343, Monday, February 22, 1988.

PREVIOUSLY ANNOUNCED TIME AND DATE OF MEETING: 2:00 p.m. (eastern time) Monday, February 29, 1988.

CHANGE IN THE MEETING: There will be an Open and Closed Session of the Commission Meeting. The Open Session of the meeting will be for the announcement of Notation Votes.

Open Session:

1. Announcement of Notation Votes

Closed Session:

1. Agency Adjudication and Determination on the Record of Federal Agency Discrimination Complaint Appeals
2. Litigation Authorization: General Counsel Recommendations

CONTACT PERSON FOR MORE INFORMATION: Hilda D. Rodriguez, Executive Officer (Acting), Executive Secretariat, (202) 634-6748.

Date: February 22, 1988.

Hilda D. Rodriguez,

Executive Officer (Acting), Executive Secretariat.

This Notice Issued February 23, 1988.

[FR Doc. 88-4191 Filed 2-24-88; 10:56 am]

BILLING CODE 6750-06-M

FEDERAL DEPOSIT INSURANCE CORPORATION

Pursuant to the provisions of the "Government in the Sunshine Act" (5 U.S.C. 552b), notice is hereby given that the Federal Deposit Insurance Corporation's Board of Directors will meet in open session at 2:00 p.m. on Tuesday, March 1, 1988, to consider the following matters:

Summary Agenda: No substantive discussion of the following items is anticipated. These matters will be resolved with a single vote unless a member of the Board of Directors requests that an item be moved to the discussion agenda.

Disposition of minutes of previous meetings.

Recommendation regarding the liquidation of a bank's assets acquired by the Corporation in its capacity as receiver, liquidator, or liquidating agent of those assets:

Case No. 47,180-SR
Stockmen's Bank and Trust Company
Gillette, Wyoming

Memorandum and Resolution re: (1) Amendments to the Corporation's Pivacy Act systems of records, which amendments (a) retitle the Bank and Proposed Bank Irregularity Records System as the Financial Institutions Investigative and Enforcement Records System and broaden the system to include individuals involved in reported irregularities or the subject of background checks at any financial institution, not just those that are FDIC-insured, (b) reflect that all information in the Changes in Bank Control Ownership Records System is now publicly available, (c) retitle the Municipal Securities Principals and Representatives System as the Municipal Securities Dealers and Government Securities Brokers/Dealers Personnel Records System and expand the system to encompass certain information about associated persons of government securities brokers and dealers which are insured State nonmember banks, which information is required to be collected pursunt to Department of Treasury regulations issued under the Government Securities Act of 1986, and (d) limit disclosure under routine use no. 6 of the Telephone Call Detail Records System to Federal agencies exclusively, when the request for information is made in connection with the hiring or retention of an employee; and (2) Final Amendments to Part 310 of the Corporation's rules and regulations, entitled "Privacy Act Regulations," which amendments make a companion change in nomenclature to the list of systems of records exempt by regulation from certain provisions of the Privacy Act.

Reports of actions approved by the standing committees of the Corporation and by officers of the Corporation pursuant to authority delegated by the Board of Directors.

Discussion Agenda:

Proposed Statement of Policy on risk-based capital.

Presentation re: Preliminary operating results for and financial position of the FDIC as of year-end 1987.

The meeting will be held in the Board Room on the sixth floor of the FDIC Building located at 550-17th Street NW., Washington, DC.

Requests for further information concerning the meeting may be directed to Mr. Hoyle L. Robinson, Executive Secretary of the Corporation, at (202) 898-3813.

Dated: February 23, 1988.

Federal Deposit Insurance Corporation.

Hoyle L. Robinson,

Executive Secretary.

[FR Doc. 88-4187 Filed 2-24-88; 10:12 am]

BILLING CODE 6714-01-M

FEDERAL DEPOSIT INSURANCE CORPORATION

Pursuant to the provisions of the "Government in the Sunshine Act" (5 U.S.C. 552b), notice is hereby given that at 2:30 p.m. on Tuesday, March 1, 1988, the Federal Deposit Insurance Corporation's Board of Directors will meet in closed session, by vote of the Board of Directors, pursuant to sections 552b(c)(2), (c)(4), (c)(6), (c)(8), (c)(9)(A)(ii), and (c)(9)(B) of Title 5, United States Code, to consider the following matters:

Summary Agenda: No substantive discussion of the following items is anticipated. These matters will be resolved with a single vote unless a member of Board of Directors requests that an item be moved to the discussion agenda.

Recommendations with respect to the initiation, termination, or conduct of administrative enforcement proceedings (cease-and-desist proceedings, termination-of-insurance proceedings, suspension or removal proceedings, or assessment of civil money penalties) against certain insured banks or officers, directors, employees, agents or other persons participating in the conduct of the affairs thereof:

Names of persons and names and locations of banks authorized to be exempt from disclosure pursuant to the provisions of subsections (c)(6), (c)(8), and (c)(9)(A)(ii)) of the "Government in the Sunshine Act" (5 U.S.C. 552b(c)(6), (c)(8), and (c)(9)(A)(ii)).

Note: Some matters falling within this category may be placed on the discussion agenda without further public notice if it becomes likely that substantive discussion of those matters will occur at the meeting.

Recommendation regarding the Corporation's assistance agreement with an insured bank.

Discussion Agenda:

Report of the Director, Division of Accounting and Corporate Services:

Memorandum re:
Investment Management Report, Quarter Ending December 31, 1987

Personnel actions regarding appointments, promotions, administrative pay increases, reassignments, retirements, separations, removals, etc.:

Names of employees authorized to be exempt from disclosure pursuant to the provisions of subsections (c)(2) and (c)(6) of the "Government in the Sunshine Act" (5 U.S.C. 552b(c)(2) and (c)(6)).

Matters relating to the possible closing of certain insured banks:

Names and locations of banks authorized to be exempt from disclosure pursuant to the provisions of subsections (c)(8), (c)(9)(A)(ii), and (c)(9)(B) of the "Government in the Sunshine Act" (5 U.S.C. 552b(c)(8), (c)(9)(A)(ii), and (c)(9)(B)).

The meeting will be held in the Board Room on the sixth floor of the FDIC Building located at 550—17th Street, NW., Washington, DC.

Requests for further information concerning the meeting may be directed to Mr. Hoyle L. Robinson, Executive Secretary of the Corporation, at (202) 898–3813.

Dated: February 23, 1988.

Hoyle L. Robinson,

Executive Secretary.

[FR Doc. 88–4188 Filed 2–24–88; 10:12 am]

BILLING CODE 6714-01-M

FEDERAL ENERGY REGULATORY COMMISSION

"FEDERAL REGISTER" CITATION OF PREVIOUS ANNOUNCEMENT: February 22, 1988, 53 FR 5242.

PREVIOUSLY ANNOUNCED TIME AND DATE OF MEETING: February 24, 1988, 10:00 a.m.

CHANGE IN THE MEETING: The following Docket Numbers have been added:

Item No., Docket No., and Company

CAG–13

Docket Nos. CP88–99–000 and CP88–100–000, Transwestern Pipeline Company

Lois D. Cashell,

Acting Secretary.

[FR Doc. 88–4210 Filed 2–24–88; 11:29 am]

BILLING CODE 6717-02-M

FEDERAL ENERGY REGULATORY COMMISSION

February 23, 1988.

The following notice of meeting is published pursuant to section 3(a) of the Government in the Sunshine Act (Pub. L. No. 94–4109), 5 U.S.C. 552b:

AGENCY HOLDING MEETING: Federal Energy Regulatory Commission.

TIME AND PLACE: February 24, 1988, 9:00 a.m.

PLACE: 825 North Capitol Street, NE., Washington, DC 20426, Hearing Room A.

STATUS: Closed.

MATTERS TO BE CONSIDERED: *Kentucky West Virginia Co. v. Penn. Public Service Commission,* No. 87–5052 (3d Cir., Jan. 19, 1988).

CONTACT PERSON FOR MORE INFORMATION: Lois D. Cashell, Acting Secretary Telephone (202) 357–8400.

The following Commissioners voted that agency business requires the holding of a closed meeting on less than the seven days' notice required under the Government in the Sunshine Act: Chairman Hesse, Commissioner Sousa, Commissioner Stalon, Commissioner Trabandt, Commissioner Naeve.

Lois D. Cashell,

Acting Secretary,

[FR Doc. 88–4211 Filed 2–24–88; 11:29 am]

BILLING CODE 6717-01-M

FEDERAL ENERGY REGULATORY COMMISSION

February 23, 1988.

The following notice of meeting is published pursuant to section 3(a) of the Government in the Sunshine Act (Pub. L. No. 94–409), 5 U.S.C. 552B:

AGENCY HOLDING MEETING: Federal Energy Regulatory Commission.

TIME AND PLACE: March 1, 1988, 2:00 p.m. to 4:00 p.m.

PLACE: 825 North Capitol Street, NE., Room 9306, Washington, DC 20426.

STATUS: Open.

MATTERS TO BE CONSIDERED: The Commission will meet with the Electric and Gas Committees of the National Association of Regulatory Utility Commissioners to discuss current regulatory issues.

CONTACT PERSON FOR MORE INFORMATION: Lois D. Cashell, Acting Secretary, Telephone (202) 357–8400.

Lois D. Cashell,

Acting Secretary.

[FR Doc. 88–4212 Filed 2–24–88; 11:29 am]

BILLING CODE 6717-01-M

FEDERAL RESERVE SYSTEM BOARD OF GOVERNORS

TIME AND DATE: 2:30 p.m., Wednesday, March 2, 1988.

PLACE: Marriner S. Eccles Federal Reserve Board Building, C Street entrance between 20th and 21st Streets, NW., Washington, DC 20551.

STATUS: Closed.

MATTERS TO BE CONSIDERED:

1. 1988 audit plan of the Board's Inspector General.
2. Personnel actions (appointments, promotions, assignments, reassignments, and salary actions) involving individual Federal Reserve System employees.
3. Any items carried forward from a previously announced meeting.

CONTACT PERSON FOR MORE INFORMATION: Mr. Joseph R. Coyne, Assistant to the Board; (202) 452–3204. You may call (202) 452–3207, beginning at approximately 5 p.m. two business days before this meeting, for a recorded announcement of bank and bank holding company applications scheduled for the meeting.

Date: February 23, 1988.

James McAfee,

Associate Secretary of the Board.

[FR Doc. 88–4189 Filed 2–24–88; 10:13 am]

BILLING CODE 6210-01-M

Federal Register

Friday
February 26, 1988

Part II

Environmental Protection Agency

40 CFR Part 60

Standards of Performance for New Stationary Sources; New Residential Wood Heaters; Final Rule

ENVIRONMENTAL PROTECTION AGENCY

40 CFR Part 60

[AD-FRL-3304-8]

Standards of Performance for New Stationary Sources; New Residential Wood Heaters

AGENCY: Environmental Protection Agency (EPA).

ACTION: Final rule.

SUMMARY: Standards of performance limiting emissions of particulate matter (PM) from new residential wood heaters were proposed in the **Federal Register** on February 18, 1987 (52 FR 4994). Today's action promulgates these standards. The standards implement section 111 of the Clean Air Act (CAA) and are based on the Administrator's determination that residential wood heaters cause, or contribute significantly to, air pollution which may reasonably be anticipated to endanger public health or welfare. The intended effect of these standards is to require all new residential wood heaters to reduce emissions of PM to levels achievable by the best demonstrated system of continuous emission reduction, considering costs, nonair quality health and environmental impacts, and energy requirements.

EFFECTIVE DATE: February 26, 1988.

Under section 307(b)(1) of the CAA, judicial review of the actions taken by this notice is available *only* by the filing of a petition for review in the U.S. Court of Appeals for the District of Columbia Circuit within 60 days of today's publication of this rule. Under section 307(b)(2) of the CAA, the requirements that are the subject of today's notice may not be challenged later during civil or criminal proceedings to enforce these requirements.

Incorporation by Reference: The incorporation by reference of certain publications in these standards is approved by the Director of the Office of the **Federal Register** as of February 26, 1988.

ADDRESSES: *Background Information Document.* A summary of comments on the proposed regulation and EPA responses may be obtained from the U.S. EPA Library (MD-35), Research Triangle Park, NC 27711, Telephone (919) 541-2777. Refer to "New Residential Wood Heaters: Background Information for Promulgated Standards," EPA-450/3-87-025.

Docket. Docket number A-84-49 is available for public inspection between 8:00 a.m. and 4:00 p.m. Monday through Friday at the Central Docket Section (LE-131), West Tower Lobby, Gallery 1, 401 M Street SW., Washington, DC 20460. A reasonable fee may be charged for copying.

FOR FURTHER INFORMATION CONTACT: For questions concerning regulatory aspects of the standards, please contact Rick Colyer, Standards Development Branch, telephone number (919) 541-5262. For questions concerning technical aspects of the standards, please contact Jeff Telander, Industrial Studies Branch, (919) 541-5427. For questions concerning test methods and laboratory accreditation, please contact George Walsh, Emission Measurement Branch, (919) 541-5544. The address for each is: Emission Standards Division (MD-13), U.S. Environmental Protection Agency, Research Triangle Park, North Carolina 27711. For questions concerning wood heater certification and enforcement, please contact Doreen Cantor, (202) 382-2874, at the following address: Stationary Source Compliance Division (EN-341), U.S. Environmental Protection Agency, 401 M Street SW., Washington, DC 20460.

SUPPLEMENTARY INFORMATION:

Summary of Standards

Standards of performance for new sources established under section 111 of the CAA reflect:

> * * * application of the best technological system of continuous emission reduction which (taking into consideration the cost of achieving such emission reduction, and any nonair quality health and environmental impact and energy requirements) the Administrator determines has been adequately demonstrated [Section 111(a)(1)].

For convenience, this will be referred to as "best demonstrated technology," or BDT.

Applicability

These new source performance standards (NSPS) regulate PM emissions from new residential wood heaters. A "wood heater" is defined as an enclosed, woodburning appliance used for space heating that meets all of the following criteria:

1. An air-to-fuel ratio averaging less than 35-to-1,
2. Firebox volume less than 20 cubic feet,
3. Minimum burn rate less than 5 kg/hr, and
4. Maximum weight of less than 800 kg.

The regulation explicitly excludes furnaces, boilers, cookstoves, and open fireplaces.

PM Standards

The rule has two phases: Wood heaters manufactured on or after July 1, 1988, or sold at retail on or after July 1, 1990, must meet certain PM emission standards (Phase 1); wood heaters manufactured on or after July 1, 1990, or sold at retail on or after July 1, 1992, must meet more stringent PM emission standards (Phase II). For each phase there are separate emission limits for catalytic wood heaters and for noncatalytic wood heaters as specified in Table 1.

TABLE 1.—WOOD HEATER EMISSION LIMITS

[Grams per hour]

	Phase I (July 1, 1988-June 30, 1990)	Phase II (beginning July 1, 1990)
Catalytic	5.5	4.1
Noncatalytic	8.5	7.5

The Phase II standards also limit allowable emissions at any burn rate (i.e., a cap). The 1990 cap for catalytic wood heaters is a function of burn rate (dry basis) and is calculated by the following:

- For burn rates $\leq$2.82 kg/hr, Cap=3.55 g/kg$\times$(burn rate)+4.98 g/hr.
- For burn rates>2.82 kg/hr, Cap=15 g/hr.

The 1990 cap for noncatalytic wood heaters is 15 g/hr for burn rates less than or equal to 1.5 kg/hr and 18 g/hr for burn rates greater than 1.5 kg/hr.

Modification/Reconstruction

Modification or reconstruction, as defined in section 60.14 and section 60.15 of Subpart A, shall not, by itself, make a wood heater an affected facility under this subpart. A "modification" is a physical or operational change to an existing wood heater, in this case built before July 1, 1988, that would result in an increase in the emission rate. "Reconstruction" means the replacement of components of an existing wood heater to the extent that the fixed capital cost of the new components exceeds 50 percent of the fixed capital cost needed to construct a comparable entirely new wood heater. Under the final rule, neither "modification" nor "reconstruction" of a unit built before July 1, 1988, makes that unit subject to the standards. On the other hand, a unit otherwise subject to the standards remains subject even if it is later "modified" or "reconstructed."

Certification and Enforcement Program

As an alternative to having each wood heater be tested for compliance, a manufacturer may elect to have an entire model line certified. To obtain a certificate of compliance the manufacturer must submit for testing a wood heater which is representative of a model line to an EPA-accredited laboratory. If the representative wood heater meets the emission limits, the entire model line will be certified upon approval of a certification application submitted to EPA. Applications for certification may be submitted at any time, but those received before July 1, 1988, will be considered under either the proposed or promulgated requirements, at the applicant's option.

Procedures for loading the test fuel, for setting up the wood heater, for operating the wood heater, and for conducting the emission tests are specified in the regulation. Two equivalent methods for measuring PM are permitted in the regulation.

Certification testing will be conducted by EPA-accredited laboratories. EPA will accredit laboratories based upon their demonstrated proficiency and other specified criteria.

The standards establish an alternative certification procedure for manufacturers who may be unable to obtain timely certification in the event that EPA determines that a certification backlog exceeding six months exists.

Unless exempted, all model lines must be covered by a certificate of compliance, or each wood heater must be individually tested. All wood heaters affected by these standards shall be labeled to indicate their compliance status. Enforcement will include: (1) Inspections at the retail level to ensure that all wood heaters are properly labeled, (2) parameter inspections to ensure that components of the manufactured units conform to the representative wood heater submitted for testing, and (3) emission audit testing to ensure that the model line meets the emission limits.

Other Requirements

All appliances subject to the standards and offered for sale are required to display both a temporary label and a permanent label. In general, the temporary label will help the prospective purchaser select an appliance by providing information on relative pollution levels, efficiency, and heat output. The permanent label will contain information relevant to compliance and applicability. Manufacturers are required to provide operation and maintenance information necessary for good emission control in the owner's manual that accompanies the appliance.

If the wood heater is equipped with a catalyst, the catalyst must be guaranteed in full for at least two years and, beginning July 1, 1990, for at least three years against thermal degradation of the substrate. Also, the catalyst must be easily accessible for inspection and replacement.

Manufacturers are required to conduct a quality assurance (QA) program consisting of both parameter inspections and emission testing.

Manufacturers are required to maintain records of certification testing data, QA program results, production volumes, and information needed to support a request for a waiver or exemption. Accredited laboratories must keep testing records and report periodically certain information required under alternative certification provisions. Commercial owners who sell used stoves must maintain names and addresses of the previous owner. All records must be retained for at least five years.

Environmental Impacts

Particulate emissions from wood heaters are a function of the method of measurement. Emission estimates based on laboratory tests were made for both uncontrolled and controlled wood heaters. Based on a total particulate catch using EPA's Modified Method 5 (MM5) discussed in the Emission Measurement Methods section in the proposal preamble (52 FR 5003) and testing procedures and protocols described in Method 28, a typical conventional wood heater emits about 60 to 70 g/hr of PM. Catalytic and noncatalytic wood heaters complying with the 1988 standards will emit at least 82 and 72 percent less, respectively. Although catalytic wood heaters achieve greater emission reductions initially, presumed deterioration of the catalyst over time is estimated to result in emissions from catalytic wood heaters over their useful lifetimes approximately equal to noncatalytic wood heaters. Catalytic and noncatalytic wood heaters complying with the 1990 standards will emit at least 86 and 75 percent less, respectively, than conventional wood heaters. The numerical emission limits in the regulation, however, are based on PM measurements using the Oregon Method 7, also described in the Emission Measurement Methods section at proposal, which measures roughly half the emissions of MM5.

The EPA projects that the nationwide PM emission reduction in the fifth year will be 395 Gigagrams (Gg) per year (or 436,000 tons per year), as shown in Table 2. It is important to note that all of the fifth year impact data refer only to wood heaters manufactured on or after July 1, 1988, or sold on or after July 1, 1990. Wood heaters manufactured before July 1, 1988, and sold before July 1, 1990, are not affected by this regulation.

Although no emission reduction estimates have been made for pollutants other than PM, the control techniques used to reduce PM emissions are known to reduce carbon monoxide (CO) and polycyclic organic matter (POM) emissions as well. POM is a class of compounds containing carcinogens.

This NSPS is anticipated to have no impacts or only negligible impacts on water quality or quantity, waste disposal, radiation, or noise. The increased wood heater efficiencies are expected to result in reduced wood consumption thereby saving timber and preserving woodlands and vegetation for aesthetics, erosion control, and ecological needs.

Health effects associated with exposure to PM include both mortality and morbidity resulting from respiratory disease, cardiovascular disease, and, in the case of wood heater PM, some risk of carcinogenesis. Welfare effects of PM emissions include soiling and materials damage to residences. Depending on the dispersion characteristics of the PM emissions, soiling and materials damage may also occur to commercial, industrial, governmental, and institutional facilities. PM emissions also adversely affect visibility.

Table 2 includes an approximate estimate of the dollar value benefits of reducing the mortality, morbidity, and household soiling and materials damage associated with the PM emission reduction due to the regulation. In addition to the health benefits of reduced air pollution, these standards are expected to reduce creosote deposition. Creosote deposition is the principal contributor to chimney fires. Thirty percent of the residential fires attributable to wood heat are believed to originate in the chimney.

TABLE 2.—FIFTH YEAR NATIONWIDE IMPACTS SUMMARY

	Costs (savings) (10^6)	Particulate emissions (Gg)	Number of wood heaters sold (10^3)	Cords of wood (10^6)	Health and welfare benefits (10^6)
No regulation (baseline)		549	800	10.1	
NSPS	(29)	154	757	9.4	1,500

Energy, Cost, and Economic Impacts

The increased efficiency of wood heaters is estimated to reduce demand for firewood by about 700,000 cords in the fifth year.

Many consumers will purchase more technically advanced wood heaters than they would have in the absence of the NSPS, and will, therefore, pay up to 25 percent more than they would for a conventional wood heater. Catalytic and noncatalytic wood heaters are, on average, about $200 and $120 more expensive, respectively, than conventional wood heaters. However, on average, this additional expense will be more than offset by cost savings from the need for less firewood and for fewer chimney cleanings over the life of the heater. Nationally, in the fifth year, there is a projected net savings to purchasers of these new woodstoves of $29 million because of these offsetting benefits.

The regulation is projected to result in a 5 percent decrease in sales in the first year when the exemption for the smallest firms is in effect. A 7 percent decrease compared to the "no regulation" case is projected for the second year. In the long run, the decrease is expected to be about 5 percent. This decrease, combined with other factors, is expected to result in some manufacturers ceasing wood heater production, and others reducing production, but it is not possible at this time to quantify this impact. In the long run, the regulation is anticipated to have no appreciable effect on the price of catalytic and noncatalytic low emitting stoves. A potentially significant but unquantified benefit of the regulation is the fostering of new innovative technologies which will result in more efficient and cleaner burning wood heaters.

Public Participation

Because of the way these standards directly affect the public, EPA made an extraordinary effort to inform and involve the public in the early stages of the rulemaking. In addition to the August 2, 1985, Advance Notice of Proposed Rulemaking, EPA established a regulatory negotiating committee to develop these standards. Representatives of all parties affected by the regulation were given the opportunity to participate. This was the first NSPS to be developed by regulatory negotiation. The general public was welcome to attend and was allowed opportunities to make presentations and to comment from the floor during the committee's deliberations. Notice of these meetings was provided in the **Federal Register** and in trade journals.

There was also public comment at each of two National Air Pollution Control Techniques Advisory Committee (NAPCTAC) meetings on these standards. EPA technical staff have been made available to respond by telephone and by mail to interested members of the public and the news media. Finally, in proposing these standards on February 18, 1987, in the **Federal Register**, EPA specifically stated that a hearing would be held if requested. No requests for a public hearing were received either by telephone or letter. The over 60 public comment letters submitted during the comment period have all been individually reviewed by EPA. Some of these comments have resulted in changes to the final rule.

Significant Comments and Changes to the Proposed Standards

Comment letters on the proposed standards were received from industry, trade associations, State and local regulatory agencies, citizens groups, and individuals. The most significant comments and the Agency's responses to those comments are discussed below. A summary of all comments received and EPA's responses can be found in "New Residential Wood Heaters: Background Information for Promulgated Standards," EPA No. 450/3-87-025 (see Addresses section).

Need for Regulation

One commenter stated that no accurate or reliable data base exists to show that emissions from woodstoves are harmful. The commenter also claimed that there was no reasonable assurance that the regulation would improve air quality because it deals with only one of a four-part system, composed of the user, fuel, chimney, and appliance.

Emissions from wood heaters are significant. The national annual PM emission total from all wood heaters is estimated to be about 2.5 million megagrams. Almost all PM emissions from wood heaters are smaller than 10 microns. Exposure to PM of this size can increase coughing and chest discomfort, aggravate cardiovascular diseases, and may increase the adverse health effects of gaseous air pollutants (for further discussion of health effects of PM_{10} emissions, see 52 FR 24634, July 1, 1987).

In addition to PM, wood heaters emit large quantities of CO and POM. POM is a class of compounds containing carcinogens. Wood heaters are estimated to account for most of the POM emitted by stationary sources.

EPA agrees that there are many factors affecting emissions from wood heaters including both stove design and consumer practices. However, the primary factor is the restriction of combustion air and stove design. Consumers have no control over stove design and their control of combustion air is dictated by their heating needs and need for overnight burns. The standards serve to control the design features (i.e., improving combustion either catalytically or noncatalytically) through performance testing, whereas consumer practices cannot be regulated through such a program. However, the regulation requires that labels and owners' manuals address operation and maintenance. The regulation prohibits consumers from operating wood heaters contrary to the owner's manual.

Authority to Regulate

One commenter objected that EPA may not regulate woodstoves as stationary sources under section 111 of the CAA, because woodstoves are mass-produced consumer products.

The definition of "stationary source"—"any building, structure, facility or installation"—is broadly drawn. Congress left it to the Administrator's judgment to apply the definition to particular air pollution problems. "This definition is clearly designed to designate as facilities those units of equipment—be they individual machines, combinations of machines, or even entire plants—*that the Agency*

finds to be appropriate units for separate emission standards." *Asarco, Inc. v. EPA*, 578 F. 2d 319, 324 n.17 (D.C. Cir. 1978) (emphasis added.) Nothing in the text or legislative history of section 111 suggests that a facility, such as a woodstove, cannot be a stationary source because it is mass-produced or a consumer product.

Composition of the Regulatory Negotiation Committee

One commenter questioned the validity of the regulatory negotiation process, contending that the committee was stacked in favor of proponents of catalytic technology and that none of the committee members represented the retail segment of the industry.

In addition to the Wood Heating Alliance (WHA), which represented both catalytic and noncatalytic wood heater manufacturers, there were three wood heater manufacturers represented on the 16-member regulatory negotiation committee. Two of these three were manufacturers of noncatalytic wood heaters. The WHA also represented the distributing and retailing segments of the wood heater industry. The EPA is not aware of organizations or groups specifically representing noncatalytic manufacturers or retailers. No such organizations or individuals responded to EPA's announcement of the formation of the regulatory negotiation committee.

As a result of EPA's various efforts to publicize the development of the rule and personal appearances by EPA staff at industry association meetings, all segments of the industry were very aware of the development of the rule and the negotiation. The planned negotiation, its evolution, and the results were also highlighted in industry trade publications with wide circulation. Following completion of the negotiation, a **Federal Register** notice summarizing the results was mailed to over 1,600 firms and individuals. The proposal was mailed to a like number. Finally, the committee's selection of noncatalyst technology as BDT, along with catalyst technology, is evidence that noncatalyst technology was treated fairly by the committee.

Pollutants Regulated

A municipal health department and a state health agency requested the Agency consider including a CO standard in the woodstoves NSPS because, among other reasons, three of the five areas in the Nation with the highest concentrations of CO have significant CO emissions from woodstoves.

The EPA considered regulating CO as well as PM, but rejected this option. The addition of a CO limit would have unduly complicated development of these standards and likely would have delayed implementation for at least another year. Both catalytic and noncatalytic controls serve to increase combustion efficiency, thereby reducing both CO and PM, both of which are the result of incomplete combustion. Based on the limited data available, EPA does not believe that a separate CO standard could achieve further CO reductions at a reasonable cost.

Affected Facilities

Two commenters recommended that EPA clarify its intent regarding regulation of pellet burners.

Pellet burners have low emissions—typically lower than the best controlled catalytic stoves. However, the committee decided to cover these appliances because they are wood-burning room heaters. Also, for marketing and other reasons, many pellet burner manufacturers prefer to be covered by the regulation. For pellet burners, as with any other wood-burning appliance, where there is a question as to whether the appliance is covered by the regulation, EPA has the authority to require that the manufacturer have the appliance tested at an accredited laboratory using Method 28A to determine minimum burn rates or air-to-fuel ratios.

The EPA has clarified the certification testing of pellet burners by incorporating testing procedures into Method 28 similar to the Oregon DEQ procedures with which pellet burner manufacturers are already familiar. Because pellet burners are a continuously-fed rather than a batch-fed process (and therefore are not characterized by a burn cycle), it is unnecessary to require particulate sampling over a long period of time. The certification test for pellet burners requires a two-hour test run in each of the four burn rates. The only difference between the EPA procedure and that used by Oregon is that EPA specifies fuel qualities in order to ensure a greater degree of standardization. The pellet burner manufacturers support this approach because it is not burdensome and yet it puts them on an equal footing with the conventional wood heaters with which they compete. This procedure is included in the promulgated regulation under Section 6.7 of Method 28. For those appliances that may be fired by either cordwood or pellets, the certification testing shall include both procedures.

One commenter said that an apparent loophole exists in EPA's exclusion of fireplaces from the regulation. He cited the example of a fireplace that is purchased by a consumer and is subsequently enclosed with tight fitting glass doors such that it meets the definition of "wood heater," i.e., low air-to-fuel ratios, low burn rates, etc.

Glass doors and other enclosures designed for masonry and metal pre-fab fireplaces are popular accessories. Some of these have combustion air controls. When added to a fireplace, they may have the effect of creating the air-starved conditions and PM emissions that characterize the appliances this regulation intends to control. The Agency has been contacted by one manufacturer of pre-fab fireplaces who believes that his appliance, when fitted with glass doors sold as an accessory, would meet the burn rate and air-to-fuel ratio criteria that define a "wood heater" under this regulation. On the other hand, EPA believes that most accessories of this type, especially when used with traditional masonry fireplaces, are unable to achieve the degree of combustion air control necessary to meet these criteria.

If a woodburning appliance is designed to accommodate enclosures (or vice versa) which may create air-starved conditions, EPA will require the manufacturer to have it tested using Method 28A with the enclosures in place to determine if it is a facility affected by the regulation. If so, the manufacturer would be subject to the standards. To do otherwise would invite circumvention of the standards. For example, a woodstove manufacturer could sell the stove and the stove door separately, claiming the latter to be an accessory.

The test of whether the appliance is designed to accommodate the enclosure (or vice versa) is based on the obvious intent of the manufacturer and the physical characteristics of the appliance/enclosure combination. If a manufacturer advertises or otherwise purports that the enclosure and the appliance are mutually compatible, or if a physical inspection indicates that they are mutually compatible, EPA will require that the appliance be tested with the enclosures in place. The appliance will be tested according to Method 28A, with the air controls, if any, set at the lowest burn rate to determine if it is affected by the regulation. "Mutually compatible" means that the enclosure can be attached to a fireplace or woodstove in a manner that permits the appliance to be air-tight or capable of being adjusted such that combustion air can be controlled.

Even if it is determined that the fireplace manufacturer did not design his appliance for the addition of accessories that create an enclosed

firebox, EPA believes that it may still be possible for circumvention to occur. In such cases, however, it would be the consumer rather than the fireplace manufacturer who would be held accountable for making an affected facility. For example, if a homeowner installs an enclosure on his new fireplace and if this enclosure results in the facility meeting the four criteria that define a "wood heater," this homeowner has "manufactured" an affected facility. As noted below, homemade or hand-built wood heaters are not exempt from this regulation.

As explained on page 4959 of the proposal preamble, the standards would apply to homemade woodstoves. One commenter stated that homemade woodstoves should be exempt from this regulation because homemade woodstoves are used primarily by the poor to provide inexpensive heat. Several other commenters favored the regulation of these appliances because of the relatively large number of such stoves, their impact on the environment, the potential for future circumvention if they are not controlled, and the potential sales that will be lost by manufacturers of wood heaters who have incurred the additional expense of complying with the regulation.

In response to the comment that homemade stoves should be exempt because they provide inexpensive heat for the poor, EPA believes that although the initial cost of a homemade stove may be less than a mass-produced manufactured woodstove, because it is assembled by the homeowner with some homeowner-supplied parts, it may likely be less durable, less efficient, and less safe—all of which may make it more expensive in the long run. Even if homemade stoves were to have lower life cycle costs, the lowered costs would not outweigh the environmental costs of exempting them from the standards. Finally, it should be noted that for those who cannot afford the initial costs of a new certified wood heater, this regulation does not restrict the sale of second hand stoves. The second hand stove market is a major source of inexpensive wood heating appliances.

The EPA agrees with the commenters affirming that kit stoves be regulated. One estimate indicates that homemade wood heaters comprise 5 percent of the market. Most of these are believed to be kit stoves. A kit stove is a type of wood heater that someone other than the commercial manufacturer completes or alters in a way as suggested by the manufacturer. A kit stove may or may not include all of the components necessary to construct the appliance, but does include plans, designs, and assorted hardware (e.g., door, legs, flue pipe fittings). Often, the consumer supplies a steel drum which becomes the firebox for the stove.

The EPA believes that manufacturers of kit stoves should be subject to the certification requirements as are the manufacturers of fully assembled wood heaters. Therefore, EPA is requiring that kit stove manufacturers have their designs certified. For those designs that are certified, the kit stove manufacturer would include in the kit any necessary hardware for assembling the emission controls (e.g., a catalytic combustor and associated equipment such as flame impingement shields and a temperature monitoring port), appropriate temporary and permanent labels, and the owner's manual.

Because some of the fabrication of the wood heater occurs at the retail or consumer level, EPA requires that kit stove manufacturers submit a kit, rather than a fully assembled wood heater, to the accredited laboratory for certification testing. To approximate more closely the quality of fabrication that occurs among consumers, a laboratory technician, using only the instructions and designs available in the kit, would construct a wood heater using the materials in the kit and the type of firebox (e.g., size and quality of steel drum) specified in the instructions. If the instructions allow the consumer to substitute different components (e.g., different sized steel drums), each variation that could affect emissions would constitute a different model and require separate certification.

The EPA is aware of at least one manufacturer of wood heater kits who sells catalytic combustors as an accessory. This same manufacturer has his stove designs safety tested and provides labels indicating compliance with the U.S. Consumer Product Safety Commission safety testing requirements. Therefore, the approach described above would not represent a significant departure from existing practice. As suggested in the proposal preamble, in view of the emissions impact and the potential for circumvention if kit stoves are exempt from this regulation, EPA believes it is reasonable that kit stoves be covered by the regulation and that the manufacturers of the kits be responsible for having their designs certified.

A commenter asked for clarification of the applicability of the standards to so-called "Russian stoves" or "European tile stoves."

The 800 kg cutoff was established as an easy means of excluding the high-mass fast-burn wood-burning appliances known as "Russian stoves" or "European tile stoves." These devices typically operate at hot, fast burn rates and cannot be damped. It is also likely that they are incapable of meeting the 5 kg/hr minimum burn rate. The intent of the committee was to exempt from the standards these appliances which rely on clean-burning air-rich conditions and which have high combustion efficiencies. It should be noted, however, the exclusion does not apply to appliances which exceed the 800 kg threshold only because of masonry or other materials which are not sold by the manufacturer as integral parts of the appliance.

Two manufacturers of wood-fired cookstoves requested an exemption from the standards for these appliance types because the design principles for room heaters and cookstoves were significantly different and because cookstoves comprise a very small fraction of the wood heater market.

The EPA agrees with the commenters who recommend excluding cookstoves. The operational characteristics of cookstoves have not been shown to be compatible with the demonstrated technologies analyzed in this rulemaking. Also, the number of cookstoves is very small relative to all other wood heaters. Therefore, the promulgated standards exempt cookstoves and include the definition of "cookstove" recommended by the WHA, with one modification as noted below. The design features necessary to be defined as a cookstove include: (1) An oven with an oven rack; (2) a mechanism for measuring the temperature in the oven; (3) a flame path which is routed around the oven; (4) a shaker grate; (5) an ash pan; (6) an ash clean-out door below the oven; and (7) the absence of a fan and/or heat channels to dissipate heat from the appliance. The final standards include one modification not recommended by industry. To qualify, the appliance must have a minimum oven size of 0.028 cubic meters (1.0 cubic foot). This is smaller than the oven sizes of bona fide cookstoves currently on the market, but large enough to discourage circumvention of the standards by simply adding a small cavity and calling it an oven.

One commenter asked whether a company that produced fewer than 2,000 stoves per year could purchase and produce a stove design from a large manufacturer and still be entitled to the 1-year exemption as a small manufacturer. This same commenter asked whether a qualifying small

manufacturer could produce his quota of uncertified stoves in addition to an unlimited number of certified stoves.

The EPA recognizes that it is possible for a large manufacturer to abuse this exemption by "farming out" production of woodstoves to several qualifying small manufacturers. The intent of the 1-year exemption is to give the small manufacturers, who presumably have fewer financial resources, more time to develop a clean-burning model and become certified. The exemption is designed for manufacturers who are not organizationally or financially related to a larger corporate entity. The EPA will evaluate, on a case-by-case basis, claims for such exemptions taking into account whether or not the small manufacturers rely on their own financial resources and ability to raise capital. In the case of a small manufacturer merely purchasing the right to produce a stove design owned by a larger manufacturer, the small manufacturer would be entitled to the 1-year exemption. In response to the second question, a small manufacturer may produce up to his limit (i.e., not to exceed base year production) of uncertified stoves in addition to an unlimited number of certified stoves.

A manufacturer asked if Oregon "grandfathered" stoves are required to be emission tested as part of the quality assurance program and if Oregon stoves are subject to Selective Enforcement Audits.

Oregon "grandfathered" stoves are exempt from the emission limits contained in § 60.532 of the regulation. The EPA recognizes that there may be differences between the test methods, and so an Oregon stove may be "grandfathered" by EPA even though it may not have been able to pass an EPA certification test. For this reason, emission testing as part of the quality assurance or EPA enforcement audit programs would be meaningless because there is no EPA standard with which to compare results. Oregon "grandfathered" stoves are, therefore, not required to perform this part of the quality assurance or audit programs, although they are required to perform parameter inspections.

Definitions

One commenter noted that the proposed definitions of "boiler" and "furnace" which require that boilers and furnaces be "tested and listed as a boiler under accepted American or Canadian safety testing codes," would place a "severe economic burden" on many boiler and furnace manufacturers. The commenter contended that boiler and furnace manufacturers would have to test and list their appliances solely to meet this provision because there are large regions of the country where safety testing is not required for such products.

The purpose of requiring that boilers and furnaces be tested and listed in order to be entitled to an exemption was to discourage appliances which are not bona fide boilers and furnaces from claiming this exemption. Manufacturers of bona fide boilers and furnaces that are not safety tested and listed may apply to EPA for case-by-case consideration. The request for exemption must be accompanied by supporting evidence and must be submitted to: Wood Heater Certification, Stationary Source Compliance Division (EN-341) U.S. Environmental Protection Agency, 401 M Street SW., Washington, DC 20460.

One commenter contended that stoker-fed coal heaters could not meet the requirement contained in the definition of "coal-only heater" because they do not include "a grate or other similar devices for shaking or disturbing the fuel bed."

The EPA agrees with the commenter and has revised the definition of "coal-only heater" in the promulgated regulation to allow a solid fuel appliance to be defined as "coal-only" if it has either a shaker grate (or similar devices) or a power driven mechanical stoker. The appliance would also have to meet the other criteria to qualify as a "coal-only heater" that is exempt from these standards.

Best Demonstrated Technology

Two commenters noted that operator practices greatly influence the effectiveness of a catalytic woodstove. One commenter cited such practices as burning colored newsprint, which can cause catalyst plugging, and burning coal, which can "foul" a catalyst, as examples of poor operator practices.

The EPA agrees with the commenter that operator practices may influence the emission reduction capabilities of a catalytic combustor. Catalysts, regardless of their application, theoretically have the potential to be deactivated due to sintering (agglomeration of active sites) or poisoning (blocking of active sites). For these reasons, the regulation requires that consumers be provided with specific information to encourage good operating practices and to warn against misuse, and requires consumers to operate stoves consistent with the permanent label and the owner's manual.

Available information from catalyst manufacturers indicates that typically less than 1 percent of their total sales are returned due to inoperative combustors. EPA is unaware of any data demonstrating that catalyst sintering occurs at temperatures common to wood heater environments. EPA is aware of only one study that investigates catalytic combustor poisoning. In that study, initial experiments showed that no change in catalyst light-off temperatures occurred as a result of burning gift wrapping and chimney cleaning salts. Following the initial temperature studies, the catalytic combustor was subjected to corrosive acid solutions in an effort to block active catalytic sites. Subsequent emission tests showed particulate levels approximately two times higher than levels reported from an equivalent unpoisoned combustor in the same stove. The catalytic combustor was then removed from the stove, soaked in an acid solution containing metal salts, and retested. The measured emission level was approximately the same as for the unpoisoned combustor. Results from this study suggest that regeneration of active catalytic sites may occur over a period of time. Results also demonstrate that with a fouled or partially poisoned combustor, emissions were approximately one-ninth the levels reported for the same stove without a combustor. Finally, it should be noted that consumers have an economic incentive to avoid practices that would reduce the effectiveness of their catalytic combustors in the form of greater efficiency and less need for chimney cleanings.

Commenters questioned EPA's view that catalytic technology represents BDT because they felt that: (1) Catalytic stoves are no less dependent on operator knowledge and experience for proper operation than are noncatalytic stoves; (2) without the catalyst, a catalytic stove is dirtier than a noncatalytic stove; (3) the standards would discourage the emergence of improved noncatalytic stove designs; and (4) consumers would fail to replace their catalysts and their catalysts would degrade over time.

The EPA agrees that both catalytic and noncatalytic stoves capable of meeting the standards will require some operator knowledge and experience. Regarding the second point, a catalytic stove with a catalyst in place has fewer emissions, but without the catalyst, it may have significantly more emissions, than a noncatalytic stove that meets the standards. However, the catalyst standard is about 40 percent more stringent than the noncatalytic standard. Also, as mentioned above, consumers

have a great economic incentive to operate the stove with the catalyst in place, as significant savings from reduced wood use and less frequent chimney cleanings can be realized. With regard to the third point, the committee explicitly addressed the need to encourage noncatalytic technology by implementing a separate, less stringent emission limit for noncatalytic stoves.

Finally, with respect to the fourth point, the committee did take into account the likelihood that, regardless of the savings, some consumers would fail to replace their catalytic combustors and that emissions from new catalytic stoves could deteriorate over time. Data from one survey were presented indicating that more than 90 percent of the owners of catalytic stoves would voluntarily replace the combustors. After considering a variety of options for addressing the problem of catalyst replacement and deterioration, the committee elected to: (1) Require two-year unconditional warranties; (2) include reminders and warnings on labels and in owner's manuals to monitor catalyst performance and to replace catalysts as necessary; (3) set a more stringent emission limit for catalytic stoves that would offset possible degradation and lack of replacement and would ensure the continuation of noncatalytic technology; and (4) prohibit owners and operators of catalytic stoves from operating the stoves without a catalyst.

The EPA believes that another important element in catalyst performance is public education. If the public is informed of the increased efficiencies resulting from catalyst replacement and the associated cost savings (less fuel consumed and fewer chimney cleanings), the voluntary replacement of catalysts will become an accepted practice for catalytic stove owners. EPA is developing such a public education program for later this year.

Two commenters stated that certified woodstoves should be required to install reliable temperature monitors to improve in-use performance. Another commenter reported that his company manufactures a high temperature catalytic monitor which performs exactly as proposed by EPA.

The committee considered requiring that all catalytic stoves be equipped with a temperature monitor to assist the stove owner in determining when the catalyst is functioning. However, there was concern over the reliability and durability of these devices. Therefore, the committee decided to require only that certified stoves be equipped to provide for a temperature monitor. The EPA plans to require temperature monitors as soon as it can be confirmed that monitors are commercially available at a reasonable price and that these monitors are accurate for periods exceeding the two-year catalyst warranty. The temperature monitor manufacturer that commented provided no supporting data or information for his claims. If data demonstrate that temperature monitors are sufficiently reliable and available at reasonable cost, EPA will propose that these devices be required on future catalytic stoves.

Two commenters stated that owners of catalytic woodstoves should be provided with incentives to encourage the timely replacement of catalysts, including: (1) A description of how to inspect visually a catalyst; (2) retailer reminders to owners about the catalyst's warranty and its need for replacement if found to be inoperative; (3) tax incentives for woodstove owners who replace their catalysts; and (4) a requirement that warranty periods be increased in the future. Another commenter suggested that the problem of catalyst deterioration be met by adopting a program of free catalyst replacement, financed by EPA.

The owner's manual will provide information on how to inspect a catalyst. A requirement that retailers remind stove owners of the need to replace their catalysts is unenforceable. Such a reminder is unnecessary, in part, because it is in the retailer's interest to offer such reminders voluntarily. Also, EPA already requires this reminder on labels and in the owner's manual. With regard to tax incentive programs, some local governments have instituted tax incentive programs for the purchase of clean-burning wood heaters. Nothing in the regulation prohibits this. However, section 111 of the CAA cannot be used to require this. With regard to the fourth point, the regulation accomplishes the extension of warranties by requiring that catalysts in wood heaters produced after July 1, 1990, have three-year warranties against physical degradation due to thermal shock.

A government-subsidized catalyst replacement program would not be free. It would put the cost burden on taxpayers rather than the woodstove owners who are responsible for controlling emissions and who are benefiting from the increased efficiency from catalytic stoves.

A State agency expressed support for the committee's decision to foster noncatalytic technology through the establishment of separate emission limits based on best demonstrated technology for this type of wood heater. On the other hand, a manufacturer of noncatalytic stoves believes that the negotiation committee was biased against noncatalytic stoves because the minimum burn rate requirement will make the standard difficult for noncatalytic stoves to meet.

Tests on several wood heaters have demonstrated that the low burn rate requirement is achievable for noncatalytic wood heaters. The minimum burn rate requirement is based on data showing that homeowners, primarily in New England, but also in Oregon, averaged burn rates less than 1 kg/hr over a third of the time the stove was operating. The data from the cold New England climate suggest that even lower burn rates than these may be selected by owners in areas with milder climates than New England.

Emission Testing: General

One commenter argued that the Oregon Method 41 (OM41) should be allowed as a compliance test method for the wood heater regulation because of being less expensive and easier to use. Eight commenters petitioned the Agency to approve the use of OM41 for QA testing, noting that the method is recognized in Oregon as equivalent to Oregon Method 7. Comments made in support of OM41 included: (1) A significant amount of data from simultaneous tests with OM41 and Oregon Method 7 verifies the high correlation between the results of the two methods; (2) the initial cost of implementing OM41 is half that of either Method 5H or 5G; (3) OM41 uses short-interval sampling and provides instantaneous results, two factors valuable in diagnosis and evaluation of wood heater design; (4) OM41 is easy to prepare, calibrate, and operate with limited technical training; (5) OM41 samplers have been calibrated by the manufacturer to produce a standardized instrument for the industry, as opposed to the EPA methods which must be calibrated frequently on site; and (6) OM41 equipment is compact and portable.

The EPA has considered this test method, but is not approving it for certification or QA testing. There are several reasons for this decision. One reason is that there are a number of technical deficiencies associated with the OM41 test method. The deficiencies that make OM41 unsuitable for a QA test method are primarily in the area of quality assurance and quality control of the data produced. The deficiencies include: (1) The data reported in the literature comparing the OM41 results with other test method results do not include many values in the range

expected for compliance testing of NSPS wood heaters (<10 g/hr); (2) the OM41 sampling rate is not proportional to the flow rate in the wood heater stack, which is necessary for accurate measurement; (3) sample volume is not measured directly, but is calculated from orifice readings; (4) the stack gas flow rate is not determined using a carbon mass balance approach as is used in the Oregon DEQ and the Method 5H procedures; and (5) the dilution temperature in the OM41 sampler is dependent on the temperature of the wood heater and, thus, is a variable.

Another reason is that there was no suggestion or support during the negotiations for the inclusion of OM41 as a third test method for either certification or QA testing purposes. Test methods are an integral part of any regulation and the emission limit is related directly to the method. This is especially true for PM because PM is not an absolute quantity, but rather is defined by the test method. Application of more than one test method to a regulation needlessly complicates enforcement and may even result in unequal enforcement of the standards. Because of these considerations, the regulatory negotiation process for the wood heater regulation resulted in two certification test methods with a correlation factor for comparability of the two methods' results.

Wood heater manufacturers may continue to use OM41 for a number of internal purposes. These include collection of interval emission samples and sampling during field evaluation. For the reasons cited above, the OM41 method is not acceptable for use in QA tests that manufacturers are required to perform.

One commenter stated that the certification and testing requirements of the proposed regulation would result in price increases that are too expensive for consumers, and that alternatives should be considered based on smoke appearance and the presence of a plume.

Certification tests are required only once for each model line and cover 5 years of production. Assuming that the costs of certification testing are passed on to the consumer in the price of a certified stove, EPA believes these costs are reasonable. If, for example, certification costs for a model line are $8,000 and if as few as 2,000 stoves per year are produced in this model line over 5 years, the per stove cost to the consumer is less than $1.

Although smoke appearance and opacity may be indicators of high emissions, these techniques lack the precision of particulate sampling. Also, because of the highly variable emissions over the course of a burn cycle, the smoke appearance at any given time could be very misleading as to the emissions generated over several hours. Moreover, smoke appearance and opacity testing would require the same multi-burn standardized operating approach in order to fairly compare performance among stoves across the burn cycle and at varying burn rates. In short, emission measurement is the only sure way of determining compliance.

A commenter argued that the test methods specified in the regulations have not been examined to determine the correlation between the emissions measured with these methods and wood heater emission performance in the field.

There are many portions of the test procedures that were developed as a result of field experience and data from field use. For example, the wood loads and burn rate categories specified represent the mass per unit volume ratio and burn rates determined from several large scale studies of in-home use of wood heaters. However, there are a large number of variables that will affect performance in the field such as wood type, moisture, load size, and operating procedures. It is expected that a wood heater that meets the standards and that performs well in laboratory tests will perform well in the field relative to a wood heater that showed high emissions in laboratory tests. This correlation will not be precise from wood heater to wood heater or even for the same wood heater in different houses or at different times.

In response to questions received after proposal from accredited laboratories, a provision has been added clarifying the role of wood heater manufacturers during certification testing. This provision limits instructions by the wood heater manufacturer on wood heater operation to written communications prior to the beginning of the certification test. The only exception is for the manufacturer who observes that the test is being improperly conducted. He may then notify in writing laboratory personnel of the problems. All instructions and notifications relating to the certification test shall be reported in the test documentation. Any special instructions are to be consistent with operating instructions in the owner's manual, except to the extent that they address details of the certification test (e.g., achieving specific burn rates) that would not be relevant to homeowner operation. In other words, the wood heater should not be operated during the certification test in a manner significantly different from homeowner operation in order to increase the likelihood of passing.

Method 28

Several commenters opposed various aspects of Method 28, which specifies the fuel loading and operation of the wood heater to be tested. In general, most comments took exception to the standardization imposed by Method 28 in test fuel type and crib design, and in wood loading and heater operations (e.g., air supply adjustments and manipulations).

Standardized test methods are necessary to achieve objective comparison among heaters and comparison of emission performance of individual heaters to a specified regulatory limit. There is an almost infinite number of variables that affect natural draft wood heaters. A standardized test method creates the reproducible test conditions that are necessary for comparing performance of one heater to another. There is also a significant emissions data base that has been generated using Method 28 (i.e., Oregon data base). These data are sufficient, in EPA's judgment, to show that Method 28 is a reasonably reliable test method. The development of the standards using data based on other procedures might have delayed the air quality benefits of the regulation by one or more years. Furthermore, a standardized woodstove testing approach is commonly practiced in industry for safety and efficiency measurements, and the concept of such an approach for emission testing was accepted by all committee members. Finally, available data on consumer wood loading practices indicate that the standardized wood loading specified in Method 28 approximates average consumer wood load densities.

Commenters' objections to Method 28 also included: (1) It does not reflect real world practices of consumers in the field; (2) it does not result in reproducible test results; and (3) it does not allow for innovative and unique designs.

In response to the comments that Method 28 does not reflect "real world" practices, it must be recognized that there is no single set of consumer wood selection, wood loading, and heater operating practices. There may be as many such practices as there are wood heaters in operation. EPA recognizes that neither Method 28 nor any standardized method necessarily reflects each individual loading. In actual use, every loading is different even for the same user. Available data on consumer practices indicate that the

procedures in Method 28 fall well within the range of "real world" practices.

Several commenters noted that despite the effort to create reproducible test results, it cannot be demonstrated that Method 28 achieves this. In response, it is noted that emissions from natural draft wood-burning heaters are known to be affected by a number of variables including burn rates, air settings, draft conditions, fuel characteristics, and fuel quantity and loading arrangements. The extent to which changes in any one or in any combination of these variables affect emission rates is unquantified. Although data are limited, it was the general conclusion of the committee that intralaboratory testing precision (i.e., reproducibility averaged over four test runs) was reasonable—less than 1 g/hr. This value takes into account all elements of the system including run-to-run emission variability and sampling imprecision. The EPA is convinced that requiring reproducible test conditions (such as fuel type and loading arrangements) minimizes testing variables, contributes to higher quality test results, and ensures confidence in emission data comparison.

Finally, in response to the comments that Method 28 discourages unique and innovative designs, EPA is unaware of data that demonstrate that such a standardized testing approach is unable to differentiate well-controlled from poorly controlled wood-burning heaters. EPA is convinced that compliance determinations should be made on a common basis since factors such as wood loading, fuel species, and air supply settings are known to affect emissions. Allowing each wood heater to be tested using unique operating conditions, fuel types and arrangement would preclude the comparison of emissions data collected for regulatory purposes. These standards provide for use of alternative test procedures for truly unique wood heater designs where fuel loading is atypical. To date, however, EPA has identified only one wood heater design that involves unique wood loading procedures (i.e., pellet burners).

Methods 5G and 5H

Several commenters noted that results collected simultaneously with Methods 5G and 5H will often not agree. The commenters argued that this disagreement is a function of the results correction factor and not of the wood heater emission characteristics. Another commenter argued that the supporting data for the equation were produced by three different laboratories and showed that the relationship is laboratory-specific.

The correction factor for relating Method 5G results with Method 5H results is based on a large quantity of direct comparison test data from several laboratories. The large quantity of data used for this determination tends to mask the run-to-run imprecision inherent in the results. It is likely that the results of the two methods for any one test run or even for a series of four test runs will disagree. The Agency recognizes that the equation relating Methods 5G and 5H results represents an average relationship. The regulatory negotiation committee also recognized that, as discussed in the proposal preamble, the actual relationship may not be constant between laboratories and may differ from the relationship defined in the method. It was concluded that small differences would not affect or bias the certification results. The advantages of allowing the use of both methods outweigh any small gain in consistency that may result from the selection of only one method. Unless a clear basis is found for revising the equation used to relate the results of the two methods (e.g., errors in the original data base or in the procedures used by the laboratories supplying the data), the Agency does not intend to revise the equation.

One commenter stated that Section 6.6 of Method 28 needs additional wording on simultaneous emission sampling with two different test methods to prohibit data manipulation of the certification test results. Another commenter recommended that when simultaneous sampling is conducted, the manufacturer should be allowed to select the data to be reported.

The Agency agrees that the simultaneous operation of sampling trains (same or different sampling methods) during certification testing is permissible. However, all data from these tests shall be reported. Results from all trains used for each valid test run shall be averaged, and the average result for each test run must be used in calculating the weighted average. The average result for each test run must be below the applicable cap unless the run is replaced as specified in the method. The manufacturer may use either sampling method for internal quality assurance auditing; however, the manufacturer will be liable for compliance auditing using either method.

A related issue is that of sequential test runs conducted with different sampling methods during the same certification test. This is also allowed with the result for each test run being used to calculate the weighted average. The result of each test run must be below the applicable cap for compliance, and a test run result may be deleted only through replacement with two or more test run results collected with the same sampling method. The requirements for QA and audit testing remain as described above.

Laboratory Accreditation

Four commenters were concerned about the duplication of laboratory accreditation functions by the Agency and the National Voluntary Laboratory Accreditation Program (NVLAP). Because NVLAP has limited emission testing experience and the NVLAP fees increase the costs of business unnecessarily, the commenters recommended that the requirement for NVLAP accreditation be deleted from the regulation.

The Agency agrees with these commenters and has revised the regulation to delete the requirement for NVLAP accreditation as a condition for EPA accreditation.

A supervisor of a laboratory located overseas, noting that § 60.535(b)(6) of the proposed regulation would allow only laboratories located in the continental U.S. to be eligible for accreditation, recommended that in the future there should be some form of recognition of foreign accreditation programs. Also, a trade official of a foreign embassy said that this requirement (no accreditation outside the continental U.S.) constitutes a "technical barrier to trade, since it provides considerable advantages to manufacturers" located in the U.S.

The standards require only that the manufacturer provide one stove out of each model line to an accredited lab for testing. This imposes no greater burden on a foreign firm than on a U.S. firm—except for the cost of shipping, and this cost is no larger proportionally than the cost of shipping stoves for distribution. The manufacturer has no need to be present during the testing (and if on-site, may serve as an observer only). Therefore, there is no added personnel cost for foreign manufacturers. In fact, most or all foreign manufacturers have resident staffs located in the U.S. and these staffs do observe certification tests. The overall effect of the certification requirement is the same for foreign and U.S. firms. Therefore, this requirement provides no advantage to U.S. manufacturers and is not in any way a barrier to trade.

QA Procedures

The proposed QA program was strongly endorsed by one State regulatory agency. Another commenter asked for clarifications: Must a manufacturer perform QA testing on certified model lines before the effective date? Before the promulgation date? Does this answer change if the manufacturer labels and/or advertises stoves as being certified?

The regulation defines "affected facility" as a wood heater manufactured on or after July 1, 1988, or sold on or after July 1, 1990. Thus, the manufacturer of a certified model line is not required to perform a QA program before July 1, 1988. However, an ongoing QA program is a condition of certification. Therefore, if a manufacturer states on a label that a stove complies with EPA certification requirements, an ongoing QA program must be in place. Otherwise, a violation of the reporting requirements would result (§ 60.536(d)). As stated at proposal, the standards do not require routine reporting of test results. However, EPA can request these results under its information gathering authority whenever it deems necessary.

One commenter asked whether manufacturers of Oregon-grandfathered woodstoves (§ 60.530(c)), stoves certified under alternative certification (§ 60.533(h)), or stoves certified on the basis that the model (§ 60.533(1)) are required to comply with the QA provisions in § 60.533(o).

There are two components to the manufacturer's mandatory QA program: parameter inspections to ensure that materials and dimensions of components critical to emissions remain within tolerance limits (§ 60.533(o)(2)) and emission testing requirements (§ 60.533(o)(3)). All certified wood heaters are required to meet the parameter inspection provisions. All certified models, except the Oregon-certified models, are required to meet the emission testing provisions. The rationale for excluding the Oregon-certified wood heaters from the testing provisions is that, since the test method and emission weighting scheme differs slightly between EPA and the Oregon regulations, it would not be appropriate to apply EPA test methods to Oregon-certified models.

A wood heater testing laboratory owner commented that the requirement in § 60.533(o)(3)(ii) that the manufacturer's internal QA emission testing be conducted using the same test method used to obtain certification is unfair and unnecessary.

The EPA agrees with this comment and has deleted from the final regulation the requirement that QA testing be conducted using the same method as used for the certification test.

Several manufacturers requested that EPA allow the use of OM41 for QA testing purposes. The reasons manufacturers prefer OM41 and the reasons EPA rejected the use of OM41 as a QA test method are discussed above under the "Emission Testing: General" section.

In conversations with manufacturers, it is apparent that some manufacturers do not understand the frequency requirement of QA testing and, therefore, believe their obligation to be much greater than it actually is. According to § 60.533(o)(3) of the regulation, the frequency of QA emission testing is a function of both the annual production volume of the model line and the extent to which the certified emission level is less than the applicable emission limit. For example, a model line with annual production of less than 2,500 units and a certified emission level of 70 percent or less of the applicable emission limit will not have to conduct a QA test unless directed to do so by EPA (and even then the maximum frequency is one test per 10,000 stoves or less than one every four years). It should be noted that the 2,500 unit threshold refers to model line production and not total production (as in the small manufacturer exemption). It should also be noted that most model lines have production volumes of less than 2,500 per year. Thus, this provision minimizes QA emission testing frequency for all but the largest model lines and is especially lenient for wood heaters that are cleaner than the emission limits.

Certification Procedures

A State agency, noting the similarity between regulating emissions from woodstoves and from automobiles (numerous, small, moveable sources), wanted clarification regarding EPA's intent for State and local responsibility regarding certification, inspection of retail outlets, laboratory accreditation, emission test auditing, and the manufacturer's QA program.

Many provisions of this NSPS are best implemented by EPA and will, therefore, not be delegated to States. The EPA intends that parameter and labeling inspections will be the only part of the enforcement program which may be delegated to State and local agencies. These consist of inspections of wood heaters at retail outlets to determine if the heaters are built to specification and if labeling requirements are followed. An individual State may choose to either accept or not accept delegation of this program. The EPA intends that certification, laboratory accreditation, and auditing will be conducted through a centralized program. A new section, "60.539a Delegation of Authority," has been added to the regulation to clarify this.

The Agency received an inquiry regarding the need for separate certification of a stove with different exhaust configurations (e.g., top and rear). The following questions were raised: Must a full certification test be run on each configuration? If not, what data would be needed? If one test run is needed, should this be the "dirtiest" test run or the most heavily-weighted test run?

Adequate information is not available to determine which configuration will result in higher emissions, or if a change in the exhaust configuration will have a similar effect for all burn rates. Therefore, different configurations will be considered different model lines and will require separate, complete certification tests.

A manufacturer of a combined wood and natural gas stove asked for clarification as to how the certification procedures would apply to such a product. As with dual-fired coal and wood heaters, an appliance which is intended, and advertised, as being capable of burning wood is covered by the standards and must be tested in a wood-only, not a mixed-fuel, mode. This would also apply to gas and wood mixtures.

A laboratory spokesman raised questions about the following situation: A stove can be fitted with a two-inch combustor, allowing it to meet the 1988 standard, or a three-inch combustor, allowing it to meet the 1990 standard. What tests are required? Can the 1990 certification test be done now even though the stove will not be built until 1990? Are two contributions to the audit pool necessary?

These stoves would be considered two separate models, needing separate certification tests. Although the 1990 certification test may be done at any time, it is not necessary for the manufacturer to be currently producing the stove. Contributions to an audit pool are no longer required.

A State agency commented that it had new test data regarding the acceptable tolerance limits for variations between the stove tested for certification and stoves manufactured within the same model line (§ 60.533(k)(2)). The State said that its test data (which were not provided or summarized) indicate that a gap of 2.26 square centimeters (0.35 square inches) of a catalyst bypass will

result in a more than doubling of emissions.

The EPA agrees that the catalyst bypass mechanism may have a significant effect on emissions. Therefore, by way of clarification, EPA is adding "catalyst bypass gaps" to the list of parameters which are presumed to affect emissions. The term "catalyst bypass gap" is not to be construed as the size of the bypass, but rather is the cross-sectional area of space that remains after the bypass is closed. It is important that EPA know if the manufacturer intends for there to be a gap when the bypass is closed, and, if so, the size of the gap. This should be documented in the engineering drawings.

The EPA does not, however, have sufficient data or information to identify an appropriate tolerance for catalyst bypass gaps. Nor has there been demonstrated a readily available, reliable technique for measuring the catalyst bypass gap. In fact, applicable techniques may differ from stove to stove, depending on the materials in the mechanism, the size of the gap, and its availability. Therefore, EPA is requiring that the manufacturer, in his application for 1990 EPA certification, describe a program that will ensure consistency in the size of any gap in the catalyst bypass mechanism, should such a gap be part of the design of the stove.

The EPA is aware that catalyst bypass gaps cannot always be measured or easily accessed after completion of construction of the wood heater. In such cases, wood heater manufacturers' programs to ensure consistent gaps should take this into account to avoid problems after construction. In addition, EPA, in conjunction with the Coalition of Northeast Governors, is developing a flow-inducing device that can provide a relative measure of leakage associated with catalyst bypass gaps. Manufacturers are encouraged to use such techniques when developed to ensure that this critical parameter remains within specifications.

A manufacturer stated that he typically allows smaller tolerances on stoves than what EPA allows in § 60.533(k). These smaller tolerances appear on all the engineering drawings. For EPA certification applications, this manufacturer intends to note on the drawings that the tolerances should be equal to those which are allowed by EPA. For models which will be "grandfathered," will the manufacturer be held to the smaller tolerances?

EPA tolerances listed in § 60.533(k) will be granted to all manufacturers without penalty for smaller tolerances.

One commenter raised the issue of how EPA would deal with a manufacturer who wanted to have an exempt appliance certified. An appliance that is not an affected facility is not regulated. With limited resources, EPA does not intend to certify appliances which are outside the scope of the regulation's coverage.

Another commenter asked for clarification regarding the manufacturer's responsibility for reporting proposed changes in any of the 11 emissions-related components listed in § 60.533(k).

The manufacturer must obtain approval from EPA prior to producing wood heaters with changes in the dimensions (i.e., beyond the specified tolerances) or materials of these components. For example, different exhaust configurations or outer coverings would require prior approval. In seeking approval, the manufacturer must demonstrate—either on the basis of emissions test data or by other information—that the proposed change may not reasonably be anticipated to cause emissions to exceed the applicable emission limit. To be in compliance, the manufacturer may not produce wood heaters that involve changes affecting any of the eight components until EPA has issued written approval.

One commenter noted that manufacturers may elect to switch catalytic combustor brands during the production life of a certified model. As stated in the preamble accompanying the proposed regulation, prior to July 1, 1990, EPA will allow substitution of catalysts which have been certified by the Oregon DEQ as equivalent for substitution, as long as the proposed substitute catalyst had been used in certifying a wood heater currently certified by EPA. The EPA is considering what procedures to establish for demonstrating equivalency for the period after July 1, 1990.

The EPA received three comments on the requirement that the laboratory "seal the wood heater on which it performed certification tests, upon completion of certification testing" (§ 60.535(g)). A laboratory owner commented that the requirement should be changed to allow subsequent inspection or safety testing by the laboratory rather than requiring immediate sealing. Another laboratory spokesman wanted EPA to clarify that the sealed stove could be returned to the manufacturer for ultimate storage. A trade association commenter agreed with the need for the provision, but requested that the regulation allow an independent laboratory to remove the seals to perform safety testing in order to allow for subsequent safety testing by the same or a different laboratory.

The EPA requires that the stove be sealed immediately after completion of certification testing to ensure that the stove will be available for testing if a problem with a model line surfaces later. No additional testing after the EPA's certification test will be allowed in order to ensure that the stove can be retested in the same condition as the original certification test. The safety test could damage the stove and the stove could also be damaged inadvertently during other emissions testing.

The stove should be sealed in a way which will provide evidence of tampering, e.g., with a lab-specific embossed stamp. The stove must be sealed by the lab, but must be stored at the manufacturer's facility. This is a change from the proposed regulation which allowed either the lab or the manufacturer to store the wood heater. The reason for the change is to allow EPA to compare more easily the tested stove directly with a randomly selected production stove.

The EPA was asked if a manufacturer may make repairs to a stove once it is delivered to the laboratory. Once the stove is released to the laboratory by the manufacturer for testing, no repairs or modification of any kind may be made to the stove. "Release to the laboratory" means the date on which certification testing is scheduled to begin according to the notice sent to EPA.

Audit Procedures

One commenter expressed concern that the Agency has not considered emission rate variability in the implementation of the selective enforcement audit (SEA) and the random compliance audit (RCA). The commenter listed the three components of this variability as stove-to-stove differences, interlaboratory reproducibility, and intralaboratory reproducibility.

The emission limits in the regulation are levels not to be exceeded when emission tests are conducted using the prescribed test methods. These emission limits are based upon emission data obtained with the test methods defined in the regulation. The levels of the standards reflect the judgment of the negotiation committee and the Agency as to the achievable level of wood heater performance, taking into account several sources of variability. This includes differences among wood heater designs and test result imprecision. If these sources of emission rate

measurement variability had not been considered, the emission limits would have been set at lower levels.

The limited amount of data available to the committee about intralaboratory precision (the ability to repeat emission measurements for a single wood heater) indicated that this precision was within 1 g/hr for a four test run average. The Agency is collecting additional data to determine the expected precision before enforcement audits are conducted on an interlaboratory basis. Analyses of these data will be conducted in a statistically sound manner and the results will be published when available. As described in the preamble to the proposal, the interlaboratory precision value assumed during the negotiations was 1 g/hr. If the results of the interlaboratory analysis show a value greater than this is appropriate, the interlaboratory component of precision will be used in evaluating audit data.

Several commenters objected to the requirement that manufacturers deposit 20 percent of the cost of certification testing into an escrow account for use by EPA in conducting RCA.

Random emission testing of production line wood heaters is a crucial part of follow-up enforcement. The negotiation committee created a program for randomly selecting model lines to test for emissions. This RCA emission test would apply equally to all model lines certified to the Phase II emission limits. The total cost of this test, however, would be significant. In order to reduce the cost impact on the industry, the committee agreed to perform RCA tests on only one of every five certified model lines and to provide for sharing the cost of these tests among all certified models. This would have been accomplished by requiring that accredited laboratories establish escrow accounts where all manufacturers of model lines subject to a possible RCA test would contribute one-fifth of the cost to the account for each of their certified model lines. As proposed, these accounts would be set up in trust for the benefit of the Administrator to pay for the cost of the RCA tests.

The proposed method of financing the cost of conducting the RCA tests has been modified to clarify that there was no intent to supplement EPA appropriations. The rule has been revised by eliminating the requirement to establish an escrow account for the benefit of the Administrator. Instead, wood heater manufacturers seeking full EPA Phase II certification, as a condition of certification, would enter into an RCA testing contract with the laboratory that conducts the certification test. Under such a contract, the laboratory would be obligated to the manufacturer for RCA emission testing if one of the manufacturer's stoves is later selected for testing. The manufacturer has legal responsibility for the test. However, the contract with the laboratory provides a means for the manufacturer to shift that responsibility to the laboratory which performs the certification test by requiring them either to perform the RCA test or transfer funds to the laboratory selected by EPA for such testing.

A State agency commented that paper hang tag temporary labels had become their greatest enforcement problem because the labels are frequently damaged or removed by customers. Self-adhesive removable labels were recommended.

The regulation has been revised to permit, but not require, self-adhesive removable labels or laminated tags which could be used for models on dealer showroom floors. Units actually delivered to customers can still include paper tags for sake of economy. The decision of how to ensure that all wood heaters are properly labeled would be up to manufacturers, distributors, and retailers.

The EPA was asked what values should be used for efficiency and heat output range on the temporary label for Oregon "grandfathered" stoves (i.e., should these values be the values approved by Oregon, or should the default value for efficiency be used?).

The EPA has not yet proposed a method to measure efficiency. These standards allow manufacturers to use a default efficiency if they choose not to test efficiency or if they choose to test before a method is available. The default efficiency was included so that consumers can make meaningful distinctions between catalytic and noncatalytic stoves. Efficiency testing by a method other than an EPA method would be confusing to consumers, and inclusion of Oregon efficiency would not provide a useful basis for comparison. Therefore, Oregon "grandfathered" stoves are required to use the default value for efficiency and calculated values for heat output range.

Cost and Economic Impacts

One commenter felt that catalyst replacement costs of $50 to $75 were prohibitive on a two-year replacement basis. This commenter also stated that any regulation promulgated to solve the problem of pollution from woodstoves should not undercut the use of wood as a means of home heating that is extensively used by low-income people.

By promoting more efficient combustion, the standards reduce rather than increase the total cost of wood burning. Catalysts are expected to last at least a total of 10,000 hours of operation. Cost savings over time would more than offset the cost of catalyst replacement. Also, the second-hand stove market will continue to provide an outlet for inexpensive wood heaters for those unable to bear the initial costs of certified stoves.

Another commenter noted the adverse impacts of the proposed standards on small manufacturers. This commenter felt that the type of stove made by his small company would have trouble complying with the standards due to climatic conditions (his customers need very high heat output stoves).

The EPA realizes that many wood heater model lines may have to be modified to meet the standards. The regulation gives small manufacturers (i.e., fewer than 2,000 units per year total production) an additional year to comply, and allows firms who manufacture a stove to the same specifications and design of an already-certified stove to avoid certification testing costs. Also, as discussed earlier (see "Quality Assurance Procedures"), manufacturers of model lines of less than 2,500 units per year and with certified emission levels less than 70 percent of the applicable emission limit, are not required to conduct QA emission testing unless directed by EPA. The committee considers these provisions adequate to enable these manufacturers to compete. Permanent exemptions from the standards on the basis of manufacturer size could be used as a means of circumvention and would be unfair to those firms that are making the effort to comply.

Delegation of Authority

Section 111(c) of the CAA provides that EPA may delegate to any State the authority to implement and enforce NSPS. Delegations are made by EPA regional offices to individual States or local air pollution control agencies.

The policy of EPA has been to encourage delegation of programs to States to the maximum extent practicable. Under the policy, EPA does not delegate authorities which involve equivalency determinations, approval of alternative test methods, decisions where Federal oversight is needed to ensure national consistency, and decisions requiring rulemaking for implementation. Because wood heaters are mass-produced consumer products marketed nationally and affecting many States, wood heater NSPS implementation and enforcement

requires Federal oversight to ensure national consistency.

Therefore, EPA has decided that a centralized program operated by EPA's staff in Washington, DC, and Research Triangle Park, NC, is the most efficient and effective way to meet the Agency's responsibilities for certifying wood heater model lines, accrediting wood heater testing laboratories, conducting emission audit testing, and making applicability determinations.

The EPA is prepared to delegate to State and local agencies the authority to conduct inspections at retail outlets to verify that appliances affected by this regulation are in compliance. This will include, but not necessarily be limited to, inspections to ensure that the labeling requirements have been met and that all wood heaters in a given model line conform to the dimensions (for specified parameters within stated tolerances) and materials of the wood heater submitted for certification testing as required in § 60.533(k).

Local agencies, particularly those where woodsmoke creates serious ambient air quality problems, have authority to adopt additional requirements for wood heaters.

Administrative

The docket is an organized and complete file of all the information considered in the development of this rulemaking. The docket is a dynamic file, since material is added throughout the rulemaking process. The docketing system is intended to allow members of the public and affected industries to identify and locate documents readily and to participate effectively in the rulemaking process. The statements of basis and purpose of the proposed and promulgated standards, the responses to significant comments, and the contents of the docket (except for interagency review materials) will serve as the record in case of judicial review (section 307(d)(7)(A)).

The effective date of the regulation is February 26,1988. Section 111 of the CAA provides that standards of performance or revisions thereto become effective upon promulgation. These standards apply to affected facilities for which construction is commenced after July 1, 1988.

As prescribed by section 111, the promulgation of these standards is based on the Administrator's determination (52 FR 5065; February 18, 1987) that residential wood heaters contribute significantly to air pollution that may reasonably be anticipated to endanger public health or welfare. In accordance with section 117 of the Act, publication of these promulgated standards was preceded by consultation with appropriate advisory committees, independent experts, and Federal departments and agencies.

This regulation will be reviewed 4 years from the date of promulgation as required by the CAA. This review will include an assessment of such factors as the need for integration with other programs, the existence of alternative methods, enforceability, improvements in emission control technology, and reporting requirements.

Section 317 of the CAA requires the Administrator to prepare an economic impact assessment for any new source standard of performance promulgated under section 111(b) of the Act. An economic impact assessment was prepared for this regulation and for other regulatory alternatives. All aspects of the assessment were considered in the formulation of the standards to ensure that cost was carefully considered in determining the BDT. The economic impact assessment is included in the docket.

The information collection requirements contained in this regulation have been approved by OMB under the provisions of the Paperwork Reduction Act of 1980, 44 U.S.C. 3501 *et seq.*, and have been assigned OMB control number 2060-0161.

Under Executive Order 12291, EPA must judge whether a regulation is "major" and therefore subject to the requirement of a Regulatory Impact Analysis. This regulation is considered a major rule because it could result in a significant increase in prices or may have adverse effects on competition or employment. The regulation is projected to cause a shift from the production and sale of conventional wood heaters to the production and sale of cleaner burning heaters that may cost as much as 25 percent more than the conventional ones, and could cause some manufacturers, distributors, and retailers to leave the wood heater market. The EPA has prepared and submitted to OMB "Regulatory Impact Analysis: Residential Wood Heater New Source Performance Standards," and has included it in the docket. This regulation was submitted to the OMB for review as required by Executive Order 12291. Any written comments from OMB to EPA and any EPA responses to those comments are included in Docket A-84-49. This docket is available for public inspection at EPA's Central Docket Section, which is listed under the **ADDRESSES** section of this notice.

The Regulatory Flexibility Act of 1980 requires the identification of potentially adverse impacts of Federal regulations upon small business entities. The Act specifically requires the completion of a Regulatory Flexibility Analysis in those instances where small business impacts are possible. Almost all business entities associated with the wood heater industry are considered small; therefore, this regulation may have a significant economic impact on a substantial number of small business entities. Some production costs may increase by as much as 25 percent and, as stated above, some manufacturers, distributors, and retailers may leave the wood heater market as result of this rule. In light of this potential impact, a regulatory flexibility analysis has been prepared pursuant to 5 U.S.C. 603 and included as part of the Regulatory Impact Analysis.

List of Subjects in 40 CFR Part 60

Air pollution control, Incorporation by references, Intergovernmental relations, Reporting and recordkeeping requirements, Wood heaters.

Date: January 25, 1988.

Lee M. Thomas,

Administrator.

For the reasons set forth in the preamble, 40 CFR Part 60 is amended as follows:

PART 60—NEW SOURCE PERFORMANCE STANDARDS

1. The authority citation for Part 60 continues to read as follows:

Authority: Secs. 101, 111, 114, 301, Clean Air Act as amended (42 U.S.C. 7401, 7411, 7414, 7601).

2. By adding paragraphs (a)(54), (a)(55), (f) and (g) to § 60.17 to read as follows:

§ 60.17 Incorporation by reference.

* * * * *

(a) * * *

(54) ASTM D2016-74 (Reapproved 1983), Standard Test Methods for Moisture Content of Wood * * * for Appendix A, Method 28.

(55) ASTM D4442-84, Standard Test Methods for Direct Moisture Content Measurement in Wood and Wood-base Materials * * * for Appendix A, Method 28.

* * * * *

(f) The following material is available for purchase from the following address: Underwriter's Laboratories, Inc. (UL), 333 Pfingsten Road, Northbrook, Illinois 60062.

(1) UL 103, Sixth Edition revised as of September 3, 1986, Standard for Chimneys, Factory-built, Residential Type and Building Heating Appliance.

(g) The following material is available for purchase from the following address: West Coast Lumber Inspection Bureau, 6980 SW. Barnes Road, Portland, Oregon 97223.

(1) West Coast Lumber Standard Grading Rules No. 16, pages 5–21 and 90 and 91, September 3, 1970, revised 1984.

3. By adding a new Subpart AAA consisting of § 60.530 through § 60.539b to read as follows:

Subpart AAA—Standards of Performance for New Residential Wood Heaters

Sec.
60.530 Applicability and designation of affected facility.
60.531 Definitions.
60.532 Standards for particulate matter.
60.533 Compliance and certification.
60.534 Test methods and procedures.
60.535 Laboratory accreditation.
60.536 Permanent label, temporary label, and owner's manual.
60.537 Reporting and recordkeeping.
60.538 Prohibitions.
60.539 Hearing and appeal procedures.
60.539a Delegation of authority.
60.539b General provisions exclusions.

Subpart AAA—Standards of Performance for New Residential Wood Heaters

§ 60.530 Applicability and designation of affected facility.

(a) The affected facility to which the provisions of this subpart apply is each wood heater manufactured on or after July 1, 1988, or sold at retail on or after July 1, 1990. The provisions of this subpart do not apply to wood heaters constructed prior to July 1, 1988, that are or have been owned by a noncommercial owner for his personal use.

(b) Each affected facility shall comply with the applicable emission limits in § 60.532 unless exempted under paragraph (c), (d), (e), (f), (g) or (h) of this section.

(c)(1) Within a model line, an affected facility manufactured prior to July 1, 1990 is exempt from the emission limits in § 60.532 if that model line has been issued a valid certificate of compliance by the Oregon Department of Environmental Quality prior to January 1, 1988, and meets the Oregon 1988 standards for particulate matter emissions, provided that

(i) The manufacturer requests the exemption in writing from the Administrator and certifies that the information used in obtaining Oregon certification satisfied applicable requirements of the Oregon law;

(ii) The certification test included at least one test run at a burn rate of less than 1.25 kg/hr;

(iii) No changes in components that may affect emissions have been made to the model line that would require recertification under § 60.533(k);

(iv) The manufacturer complies with application requirements contained in § 60.533(b) (1), (2), (5), (6), (9) and (11); (c); (m); and (o)(2); and

(v) The manufacturer submits a copy of the certificate issued by the State of Oregon, a complete set of engineering drawings, and, at a minimum, those portions of the test report that include the emissions summary, the burn rates, and the laboratory's description of how the wood heater operates.

(2) Affected facilities exempted under this paragraph may not be sold at retail on or after July 1, 1992.

(3) Any certificate issued under this paragraph prior to January 1, 1988, shall be modified to reflect any modifications in Oregon certification approved by the Oregon Department of Environmental Quality prior to that date. The manufacturer shall notify the Administrator of any such modifications within 30 days of their approval by the Oregon Department of Environmental Quality.

(4) Upon denying a certificate under this paragraph the Administrator shall give written notice setting forth the basis for his determination to the manufacturer involved.

(5) The Administrator may revoke a certificate issued under this paragraph if he determines that any of the conditions or determinations listed in § 60.533(l)(1) (iii), (iv), (v), and (vi) exists; or if the State of Oregon revokes its certification.

(d) An affected facility is exempt from the applicable emission limits of § 60.532, provided that

(1) It was manufactured between July 1, 1988, and June 30, 1989;

(2) The manufacturer was a manufacturer of wood heaters as of January 1, 1987, and manufactured (or, in the case of a foreign manufacturer, exported to the United States) fewer than 2,000 wood heaters between July 1, 1987, and June 30, 1988;

(3) The manufacturer manufactures no more uncertified wood heaters between July 1, 1988 and June 30, 1989, than he manufactured (or, in the case of a foreign manufacturer, exported to the United States) between July 1, 1987 and June 30, 1988; and

(4) The affected facility is sold at retail before July 1, 1991.

(5) For the purposes of this paragraph, the term "manufacturer" does not include importers of wood heaters.

(e) Affected facilities manufactured in the U.S. for export are exempt from the applicable emission limits of § 60.532 and the requirements of § 60.533.

(f) A wood heater used for research and development purposes that is never offered for sale or sold is exempt from the applicable emission limits of § 60.532 and the requirements of § 60.533. No more than 50 wood heaters manufactured per model line may be exempted for this purpose.

(g) A coal-only heater is exempt from the applicable emission limits of § 60.532 and the requirements of § 60.533.

(h) The following are not affected facilities and are not subject to this subpart:

(1) Open masonry fireplaces constructed on site.

(2) Boilers.

(3) Furnaces. and

(4) Cookstoves.

(i) Modification or reconstruction, as defined in § 60.14 and § 60.15 of Subpart A, shall not, by itself, make a wood heater an affected facility under this subpart.

§ 60.531 Definitions.

As used in this subpart, all terms not defined herein shall have the meaning given them in the Act and Subpart A of this part.

"At retail" means the sale by a commercial owner of a wood heater to the ultimate purchaser.

"Boiler" means a solid fuel burning appliance used primarily for heating spaces, other than the space where the appliance is located, by the distribution through pipes of a gas or fluid heated in the appliance. The appliance must be tested and listed as a boiler under accepted American or Canadian safety testing codes. A manufacturer may request an exemption in writing from the Administrator by stating why the testing and listing requirement is not practicable and by demonstrating that his appliance is otherwise a boiler.

"Coal-only heater" means an enclosed, coal-burning appliance capable of space heating, or domestic water heating, which has all of the following characteristics:

(a) An opening for emptying ash that is located near the bottom or the side of the appliance,

(b) A system that admits air primarily up and through the fuel bed,

(c) A grate or other similar device for shaking or disturbing the fuel bed or power-driven mechanical stoker,

(d) Installation instructions that state that the use of wood in the stove, except for coal ignition purposes, is prohibited by law, and

(e) The model is listed by a nationally recognized safety-testing laboratory for use of coal only, except for coal ignition purposes.

"Commercial owner" means any person who owns or controls a wood heater in the course of the manufacture, importation, distribution, or sale of the wood heater.

"Cookstove" means a wood-fired appliance that is designed primarily for cooking food and that has the following characteristics:

(a) An oven, with a volume of 0.028 cubic meters (1 cubic foot) or greater, and an oven rack,

(b) A device for measuring oven temperatures,

(c) A flame path that is routed around the oven,

(d) A shaker grate,

(e) An ash pan,

(f) An ash clean-out door below the oven, and

(g) The absence of a fan or heat channels to dissipate heat from the appliance.

"Furnace" means a solid fuel burning appliance that is designed to be located outside of ordinary living areas and that warms spaces other than the space where the appliance is located, by the distribution of air heated in the appliance through ducts. The appliance must be tested and listed as a furnace under accepted American or Canadian safety testing codes unless exempted from this provision by the Administrator. A manufacturer may request an exemption in writing from the Administrator by stating why the testing and listing requirement is not practicable and by demonstrating that his appliance is otherwise a furnace.

"Manufactured" means completed and ready for shipment (whether or not packaged).

"Manufacturer" means any person who constructs or imports a wood heater.

"Model line" means all wood heaters offered for sale by a single manufacturer that are similar in all material respects.

"Representative affected facility" means an individual wood heater that is similar in all material respects to other wood heaters within the model line it represents.

"Sale" means the transfer of ownership or control, except that transfer of control shall not constitute a sale for purposes of § 60.530(f).

"Similar in all material respects" means that the construction materials, exhaust and inlet air system, and other design features are within the allowed tolerances for components identified in § 60.533(k).

"Wood heater" means an enclosed, woodburning appliance capable of and intended for space heating and domestic water heating that meets all of the following criteria:

(a) An air-to-fuel ratio in the combustion chamber averaging less than 35-to-1 as determined by the test procedure prescribed in § 60.534 performed at an accredited laboratory,

(b) A usable firebox volume of less than 20 cubic feet,

(c) A minimum burn rate less than 5 kg/hr as determined by the test procedure prescribed in § 60.534 performed at an accredited laboratory, and

(d) A maximum weight of 800 kg. In determining the weight of an appliance for these purposes, fixtures and devices that are normally sold separately, such as flue pipe, chimney, and masonry components that are not an integral part of the appliance or heat distribution ducting, shall not be included.

§ 60.532 Standards for particulate matter.

Unless exempted under § 60.530, each affected facility:

(a) Manufactured on or after July 1, 1988, or sold at retail on or after July 1, 1990, shall comply with the following particulate matter emission limits as determined by the test methods and procedures in § 60.534:

(1) An affected facility equipped with a catalytic combustor shall not discharge into the atmosphere any gases which contain particulate matter in excess of a weighted average of 5.5 g/hr.

(2) An affected facility not equipped with a catalytic combustor shall not discharge into the atmosphere any gases which contain particulate matter in excess of a weighted average of 8.5 g/hr.

(b) Manufactured on or after July 1, 1990, or sold at retail on or after July 1, 1992, shall comply with the following particulate matter emission limits as determined by the test methods and procedures in § 60.534:

(1) An affected facility equipped with a catalytic combustor shall not discharge into the atmosphere any gases which contain particulate matter in excess of a weighted average of 4.1 g/hr. Particulate emissions during any test run at any burn rate that is required to be used in the weighted average shall not exceed the value calculated for "C" (rounded to 2 significant figures) calculated using the following equation:

(i) At burn rates less than or equal to 2.82 kg/hr,

$C = 3.55\ g/kg \times BR + 4.98\ g/hr$, where

BR = burn rate in kg/hr

(ii) At burn rates greater than 2.82 kg/hr, $C = 15\ g/hr$.

(2) An affected facility not equipped with a catalytic combustor shall not discharge into the atmosphere any gases which contain particulate matter in excess of a weighted average of 7.5 g/hr. Particulate emissions shall not exceed 15 g/hr during any test run at a burn rate less than or equal to 1.5 kg/hr that is required to be used in the weighted average, and particulate emissions shall not exceed 18 g/hr during any test run at a burn rate greater than 1.5 kg/hr that is required to be used in the weighted average.

§ 60.533 Compliance and certification.

(a) For each model line, compliance with applicable emission limits may be determined based on testing of representative affected facilities within the model line.

(b) Any manufacturer of an affected facility may apply to the Administrator for a certificate of compliance for a model line. The application shall be in writing to: Stationary Source Compliance Division (EN-341), U.S. EPA, 401 M Street, SW., Washington, DC, 20460, Attention: Wood Heater Program. The manufacturer must submit two complete copies of the application and attachments. The application must be signed by the manufacturer, or an authorized representative, and shall contain the following:

(1) The model name and/or design number,

(2) Two color photographs of the tested unit (or, for models being certified under § 60.530(c), photographs of a representative unit), one showing a front view and the other, a side view,

(3)(i) Engineering drawings and specifications of components that may affect emissions (including specifications for each component listed in paragraph (k) of this section). Manufacturers may use complete assembly or design drawings that have been prepared for other purposes, but should designate on the drawings the dimensions of each component listed in paragraph (k) of this section. Manufacturers shall identify tolerances of components of the tested unit listed in paragraph (k)(2) of this section that are different from those specified in that paragraph, and show that such tolerances may not reasonably be anticipated to cause wood heaters in the model line to exceed the applicable emission limits.

(ii) A statement whether the firebox or any firebox component (other than one listed in paragraph (k)(3) of this section) will be composed of different material from the material used for the firebox or firebox component in the wood heater on which certification testing was performed and a description of any such differences.

(iii) For applications to certify a model line of catalytic wood heaters to meet the emission limits in § 60.532(b), a

statement describing the manufacturer's program to ensure consistency in the size of any gap in the catalyst bypass mechanism. The statement shall describe, in narrative form, the components of the system that affect the size of the gap, any specifications for critical dimensions of any such components, and the procedure the manufacturer will use to ensure consistency in the size of the catalyst bypass gap.

(4) All documentation pertaining to a valid certification test, including the complete test report and, for all test runs: Raw data sheets, laboratory technician notes, calculations, and test results. Documentation shall include the items specified in the applicable test methods. Recommended formats and guidance materials are available from the Administrator.

(5) For catalytic wood heaters, a copy of the catalytic combustor warranty,

(6) A statement that the manufacturer will conduct a quality assurance program for the model line which satisfies the requirements of paragraph (o) of this section,

(7) A statement describing how the tested unit was sealed by the laboratory after the completion of certification testing, and

(8) A statement that the manufacturer will notify the accredited laboratory if the application for certification is granted, within thirty days of receipt of notification from EPA.

(9) Statements that the wood heaters manufactured under this certificate will be—

(i) Similar in all material respects to the wood heater submitted for certification testing, and

(ii) Will be labeled as prescribed in § 60.536,

(10) For catalytic wood heaters, a statement that the warranty, access and inspection, and temperature monitoring provisions in paragraphs (c), (d), and (m) of this section will be met,

(11) A statement that the manufacturer will comply with the recordkeeping and reporting requirements in § 60.537,

(12) A written estimate of the number of wood heaters that the manufacturer anticipates that he will produce annually for the first two production years. Compliance with this provision may be obtained by designating one of the following ranges:

(i) Less than 2,500,

(ii) 2,500 to 4,999,

(iii) 5,000 to 9,999,

(iv) 10,000 to 49,999, and

(v) 50,000 or greater; and

(13) At the beginning of each test run in a certification test series, two photographs of the fuel load: One before and one after it is placed in the wood heater. One of the photographs shall show the front view of the wood load and the other shall show the side view.

(14) For manufacturers seeking certification of model lines under § 60.533(e) to meet the emission limits in § 60.532(b), a statement that the manufacturer has entered into a contract with an accredited laboratory which satisfies the requirements of paragraph (g) of this section.

(c) If the affected facility is a catalytic wood heater, the warranty for the catalytic combustor shall include the replacement of the combustor and any prior replacement combustor without charge to the consumer for:

(1) 2 years from the date the consumer purchased the heater for any defects in workmanship or materials that prevent the combustor from functioning when installed and operated properly in the wood heater, and

(2) 3 years from the date the consumer purchased the heater for thermal crumbling or disintegration of the substrate material for heaters manufactured after July 1, 1990.

(d) The manufacturer of an affected facility equipped with a catalytic combustor shall provide for a means to allow the owner to gain access readily to the catalyst for inspection or replacement purposes and shall document in his application for certification how the catalyst is replaced.

(e)(1) The Administrator shall issue a certificate of compliance for a model line if he determines, based on all information submitted by the applicant and any other relevant information available to him, that:

(i) A valid certification test has demonstrated that the wood heater representative of the model line complies with the applicable particulate emission limits in § 60.532,

(ii) Any tolerances or materials for components listed in paragraph (k) (2) or (3) of this section that are different from those specified in those paragraphs may not reasonably be anticipated to cause wood heaters in the model line to exceed the applicable emission limits, and

(iii) The requirements of paragraphs (b), (c), (d), and (m) of this section have been met. The program described under paragraph (b)(3)(iii) of this section shall be deemed a tolerance specified in the certified design.

(2) For the period between proposal of this subpart through June 30, 1988, an applicant may elect to have his application determined under the requirements of Subpart AAA proposed on February 18, 1987 (52 FR 4994).

(3) Upon denying certification under this paragraph, the Administrator shall give written notice to the manufacturer setting forth the basis for his determination.

(f) To be valid, a certification test must be:

(1) Announced to the Administrator in accordance with § 60.534(e),

(2) Conducted by a testing laboratory accredited by the Administrator pursuant to § 60.535,

(3) Conducted on a wood heater similar in all material respects to other wood heaters of the model line that is to be certified, and

(4) Conducted in accordance with the test methods and procedures specified in § 60.534.

(g) To have a wood heater model certified under § 60.533(e) to meet the emission limits in § 60.532(b), a manufacturer must enter into a contract with the accredited laboratory that performed the certification test, under which the laboratory will:

(1) Conduct the random compliance audit test at no cost to the manufacturer if EPA selects that laboratory to conduct the test, or

(2) Pay the manufacturer the reasonable cost of a random compliance audit test (as determined by EPA) if EPA selects any other laboratory to conduct the test.

(h)(1)(i) The Administrator on a monthly basis between April 1, 1987, and July 1, 1990, shall determine whether an undue certification delay exists, pursuant to paragraph (h)(2) of this section. Such determinations shall be made on or about the 20th day of the month.

(ii) Any failure of the Administrator to make a required determination under paragraph (h)(1)(i) of this section by the 30th day of any month shall constitute a determination that an undue certification delay exists.

(iii) Any determination under paragraph (h)(1) (i) or (ii) of this section shall remain in effect until superseded by a subsequent determination; except that a determination under paragraph (h)(1)(ii) shall remain in effect for at least thirty (30) days.

(iv) The Administrator shall mail notice of all determinations under paragraph (h)(1) (i) or (ii) of this section to all persons who have requested in writing to receive notification.

(2) An undue certification delay exists when the sum of the average testing lead time and the certification lead time is greater than six months.

(i) The average testing lead time shall be determined from the information submitted by accredited laboratories pursuant to § 60.537(b). The average testing lead time is the simple average of lead times reported under § 60.537(b)(2) for the current month.

(ii) The certification lead time shall be an estimate, as of the date of the determination, of the time likely to be required to determine whether to issue a certificate of compliance for a complete application received on that date. This estimate shall be based on factors such as past experience, the number of applications to be processed, and the resources available for processing.

(3)(i) While any determination under paragraph (h)(1) of this section that an undue certification delay exists is in effect, a manufacturer may submit an application for alternative certification.

(ii) An application for alternative certification shall be in writing to: Stationary Source Compliance Division (EN-341), U. S. EPA, 401 M Street, SW., Washington, DC 20460, Attention: Wood Heater Program. The application must be in duplicate copies and signed by the manufacturer, or an authorized representative, and contain the following:

(A) The documentation required under paragraphs (b) (1) through (6) and (b) (9) through (12) of this section, except that in applying paragraph (b)(4), paragraphs (f) (1) and (2) shall not apply,

(B) Evidence of compliance with paragraphs (c), (d) and (m) of this section,

(C) A statement that a representative affected facility for the model line in question has been tested in accordance with § 60.534(a), and meets applicable emission limits in § 60.532. Such testing may be conducted in any laboratory of the manufacturer's choice,

(D) A statement identifying the month which will be the end of the manufacturer's production year for that model,

(E) Evidence that the manufacturer has scheduled with an accredited laboratory the testing required for full certification under this subpart at the earliest feasible date,

(F) Evidence that the manufacturer has notified the accredited laboratory that he intends to apply for alternative certification, and

(G) A commitment to report the results of all valid certification tests to the Administrator.

(iii) Test results not obtained under pressurized conditions may be adjusted for altitude according to the following formula:

$$E_A = \frac{E}{AAF}, \text{ where}$$

E_A = adjusted emissions in g/hr
E = measured emissions in g/hr at ALT_L
AAF = altitude adjustment factor where,

$$AAF = \frac{ALT_L - 300}{6{,}600} + 1.0$$

ALT_L = altitude above mean sea level of laboratory in feet

(4)(i) Submission of an application for alternative certification pursuant to paragraph (h)(3) of this section automatically renders a model line certified 30 days after receipt of the application for alternative certification by the Administrator, unless alternative certification is denied sooner, on the basis that the application is not complete, or that the test results do not show compliance with the applicable emission limits in § 60.532. Except as provided in paragraphs (h)(4)(ii) through (h)(4)(iv) of this section, alternative certification shall expire on the earlier of:

(A) The completion of the manufacturer's production year during which the Administrator takes action under paragraph (e) of this section on an application for certification, or

(B) Twelve months after such action.

(ii) If, in any certification tests performed pursuant to the commitment in paragraph (h)(3)(ii)(E) of this section, emissions from the affected facility exceed the applicable emission limits in § 60.532 by greater than 50 percent, alternative certification pursuant to this paragraph shall expire 72 hours after the manufacturer receives notification from the laboratory of the test results, in accordance with paragraph (h)(4)(v) of this section.

(iii) If, in any certification test performed under paragraph (h)(3)(ii) of this section, emissions from the affected facility exceed the applicable emission limits in § 60.532, alternative certification pursuant to this paragraph shall expire 72 hours after the manufacturer receives notification satisfying paragraph (h)(4)(v) of this section from the laboratory of the test results, if such notification is received within 100 days of the date on which the manufacturer scheduled the certification test.

(iv) Alternative certification shall expire 72 hours after the manufacturer receives notification from the Administrator that the manufacturer has—

(A) Failed to meet a scheduled commitment for certification testing,

(B) Failed to complete the testing, or

(C) Delayed completion of the testing by more than 14 days after certification testing began by ordering additional testing.

(v) Any notification under paragraph (h)(4)(ii) or (h)(4)(iii) of this section shall include a copy of a preliminary test report from the accredited laboratory. The accredited laboratory shall provide a preliminary test report to the manufacturer and to the Administrator within 10 days of the completion of testing, if a wood heater exceeds the applicable emission limits in § 60.532 in certification testing.

(i) An applicant for certification may apply for a waiver of the requirement to submit the results of a certification test pursuant to paragraph (b)(4) of this section, if the wood heaters of the model line are similar in all material respects to another model line that has already been issued a certificate of compliance. A manufacturer that seeks a waiver of certification testing must identify the model line that has been certified, and must submit a copy of an agreement with the owner of the design permitting the applicant to produce wood heaters of that design.

(j)(1) Unless revoked sooner by the Administrator, a certificate of compliance shall be valid:

(i) Through June 30, 1990, for a model line certified as meeting emissions limits in § 60.532(a), and

(ii) For five years from the date of issuance, for a model line certified as meeting emission limits in § 60.532(b).

(2) Upon application for renewal of certification by the manufacturer, the Administrator may waive the requirement for certification testing upon determining that the model line continues to meet the requirements for certification in paragraph (e) of this section, or that a waiver of certification is otherwise appropriate.

(3) Upon waiving certification testing under paragraph (j)(2) of this section, the Administrator shall give written notice to the manufacturer setting forth the basis for his determination.

(k)(1) A model line must be recertified whenever any change is made in the design submitted pursuant to § 60.533(b)(3) that is presumed to affect the particulate emission rate for that model line. The Administrator may waive this requirement upon written request by the manufacturer, if he determines that the change may not reasonably be anticipated to cause wood heaters in the model line to exceed the applicable emission limits.

The grant of such a waiver does not relieve the manufacturer of any compliance obligations under this subpart.

(2) Any change in the indicated tolerances of any of the following components (where such components are applicable) is presumed to affect particulate emissions if that change exceeds ±¼ inch for any linear dimension and ±5 percent for any cross-sectional area relating to air introduction systems and catalyst bypass gaps unless other dimensions and cross-sectional areas are previously approved by the Administrator under paragraph (E)(1)(ii) of this section:

(i) Firebox: Dimensions,

(ii) Air introduction systems: Cross-sectional area of restrictive air inlets, outlets, and location, and method of control,

(iii) Baffles: Dimensions and locations,

(iv) Refractory/insulation: Dimensions and location,

(v) Catalyst: Dimensions and location,

(vi) Catalyst bypass mechanism and, for model lines certified to meet the emissions limits in § 60.532(b), catalyst bypass gap tolerances (when bypass mechanism is in closed position): Dimensions, cross-sectional area, and location,

(vii) Flue gas exit: Dimensions and location,

(viii) Door and catalyst bypass gaskets: Dimensions and fit,

(ix) Outer shielding and coverings: Dimensions and location,

(x) Fuel feed system: For wood heaters that are designed primarily to burn wood pellets and other wood heaters equipped with a fuel feed system, the fuel feed rate, auger motor design and power rating, and the angle of the auger to the firebox, and

(xi) Forced air combustion system: For wood heaters so equipped, the location and horsepower of blower motors and the fan blade size.

(3) Any change in the materials used for the following components is presumed to affect emissions:

(i) Refractory/insulation or

(ii) Door and catalyst bypass gaskets.

(4) A change in the make, model, or composition of a catalyst is presumed to affect emissions, unless the change has been approved in advance by the Administrator, based on test data that demonstrate that the replacement catalyst is equivalent to or better than the original catalyst in terms of particulate emission reduction.

(l)(1) The Administrator may revoke certification if he determines that the wood heaters being produced in that model line do not comply with the requirements of this section or § 60.532. Such a determination shall be based on all available evidence, including:

(i) Test data from a retesting of the original unit on which the certification test was conducted,

(ii) A finding that the certification test was not valid,

(iii) A finding that the labeling of the wood heater does not comply with the requirements of § 60.536,

(iv) Failure by the manufacturer to comply with reporting and recordkeeping requirements under § 60.537,

(v) Physical examination showing that a significant percentage of production units inspected are not similar in all material respects to the representative affected facility submitted for testing, or

(vi) Failure of the manufacturer to conduct a quality assurance program in conformity with paragraph (o) of this section.

(2) Revocation of certification under this paragraph shall not take effect until the manufacturer concerned has been given written notice by the Administrator setting forth the basis for the proposed determination and an opportunity to request a hearing under § 60.539.

(3) Determination to revoke certification based upon audit testing shall be made only in accordance with paragraph (p) of this section.

(m) A catalytic wood heater shall be equipped with a permanent provision to accommodate a commercially available temperature sensor which can monitor combustor gas stream temperatures within or immediately downstream [within 2.54 centimeters (1 inch)] of the combustor surface.

(n) Any manufacturer of an affected facility subject under § 60.530(b) to the applicable emission limits of this subpart that does not belong to a model line certified under this section shall cause that facility to be tested in an accredited laboratory in accordance with paragraphs (f)(1), (f)(2), and (f)(4) of this section before it leaves the manufacturer's possession and shall report the results to the Administrator.

(o)(1) For each certified model line, the manufacturer shall conduct a quality assurance program which satisfies the following requirements:

(2) Except as provided in paragraph (o)(5) of this section, the manufacturer or his authorized representative shall inspect at least one from every 150 units produced within a model line to determine that the wood heater is within applicable tolerances for all components that affect emissions as listed in paragraph (k)(2) of this section.

(3)(i) Except as provided in paragraph (o)(3)(iii) or (o)(5) of this section, the manufacturer or his authorized representative shall conduct an emission test on a randomly selected affected facility produced within a model line certified under § 60.533(e) or § 60.533(h), on the following schedule:

If weighted average certification test results were—	If yearly production per model is—	
	<2500	>2500
70% or less of std	When directed by EPA, not to exceed once every 10,000 stoves.	Every 10,000 stoves or triennially (whichever is more frequent).
Within 30% of std	Every 5,000 stoves.	Every 5,000 stoves or annually (whichever is more frequent).

(ii) Emission tests shall be conducted in conformity with § 60.534(a), using either approved method for measuring particulate matter (as provided in § 60.534). The manufacturer shall notify EPA by U.S. mail that an emissions test required pursuant to this paragraph will be conducted within one week of the mailing of the notification.

(iii) If the manufacturer stated pursuant to paragraph (b)(3) of this section that the firebox or any firebox component would be composed of a different material than the material used in the wood heater on which certification testing was performed, the first test shall be performed before 1,000 wood heaters are produced. The manufacturer shall submit a report of the results of this emission test to the Administrator within 45 days of the completion of testing.

(4) The manufacturer shall take remedial measures, as appropriate, when inspection or testing pursuant to paragraph (o) of this section indicate that affected facilities within the model line are not within applicable tolerances or do not comply with applicable emission limit. Manufacturers shall record the problem identified, the extent of the problem, the remedial measures taken, and the effect of such remedial measures as projected by the manufacturer or determined by any additional testing.

(5)(i) If two consecutive passing tests are conducted under either paragraph

(o) (2) or (3) of this section, the required frequency of testing under the applicable paragraph shall be modified as follows: Skip every other required test.

(ii) If five consecutive passing tests are conducted under the modified schedule provided for in Paragraph (o)(5)(i) of this section, the required frequency of testing under the applicable paragraph shall be further modified as follows: Skip three consecutive required tests after each required test that is conducted.

(iii) Testing shall resume on the frequency specified in the paragraph (o) (2) or (3), as applicable, if a test failure results during any test conducted under a modified schedule.

(6) If emissions tests under paragraph (o) of this section are conducted at an altitude different from the altitude at which certification tests were conducted, and are not conducted under pressurized conditions, the results shall be adjusted for altitude in accordance with paragraph (h)(3)(iii) of this section.

(p)(1)(i) The Administrator shall after July 1, 1990, select for random compliance audit testing certified wood heater model lines that have not already been subject to a random compliance audit under this paragraph. The Administrator shall not select more than one model line under this program for every five model lines for which certification is granted under § 60.533(e) to meet the emission limits in § 60.532(b). No accredited laboratory shall test or bear the expense of testing, as provided in the contract described in paragraph (g) of this section, more than one model line from every five model lines tested by the laboratory for which certification was granted. The Administrator shall use a procedure that ensures that the selection process is random.

(ii) The Administrator may, by means of a neutral selection scheme, select model lines certified under § 60.533(e) or § 60.533(h) for selective enforcement audit testing under this paragraph. Prior to July 1, 1990, the Administrator shall only select a model line for a selective enforcement audit on the basis of information indicating that affected facilities within the model line may exceed the applicable emission limit in § 60.532.

(2) The Administrator shall randomly select for audit testing five production wood heaters from each model line selected under paragraph (p)(1) of this section. These wood heaters shall be selected from completed units ready for shipment from the manufacturer's facility (whether or not the units are in a package or container). The wood heaters shall be sealed upon selection and remain sealed until they are tested or until the audit is completed. The wood heaters shall be numbered in the order that they were selected.

(3)(i) The Administrator shall test, or direct the manufacturer to test, the first of the five wood heaters selected under paragraph (p)(2) of this section in a laboratory accredited under § 60.535 that is selected pursuant to paragraph (p)(4) of this section.

(ii) The expense of the random compliance audit test shall be the responsibility of the wood heater manufacturer. A manufacturer may require the laboratory that performed the certification test to bear the expense of a random compliance audit test by means of the contract required under paragraph (g) of this section. If the laboratory with which the manufacturer had a contract has ceased business due to bankruptcy or is otherwise legally unable to honor the contract, the Administrator will not select any of that manufacturer's model lines for which certification testing has been conducted by that laboratory for a random compliance audit test.

(iii) The test shall be conducted using the same test method and procedure used to obtain certification. If the certification test consisted of more than one particulate sampling test method, the Adminstrator may use either one of these methods for the purpose of audit testing. If the test is performed in a pressure vessel, air pressure in the pressure vessel shall be maintained within 1 percent of the average of the barometric pressures recorded for each individual test run used to calculate the weighted average emission rate for the certification test. The Administrator shall notify the manufacturer at least one week prior to any test under this paragraph, and allow the manufacturer and/or his authorized representatives to observe the test.

(4)(i) Except as provided in this paragraph, the Administrator may select any accredited laboratory for audit testing.

(ii)(A) The Administrator shall select the accredited laboratory that performed the test used to obtain certification for audit testing, until the Administrator has amended this subpart, based upon a determination pursuant to paragraph (p)(4)(ii)(B) of this section, to allow testing at another laboratory. If another laboratory is selected pursuant to this paragraph, and the overall precision of the test method and procedure is greater than ± 1 gram per hour of the weighted average at laboratories below 304 meters (1,000 feet) elevation (or equivalent), the interlaboratory component of the precision shall be added to the applicable emissions standard for the purposes of this paragraph.

(B) With respect to each test method and procedure set out in § 60.534(a), the Administrator shall, by July 1, 1990, publish a decision, after notice of an opportunity for comment, which either

(1) Amends this subpart based on a determination of the overall precision of the method and procedure, and the interlaboratory component thereof, or

(2) Sets forth a determination that the available data are insufficient to determine the overall precision of the method and procedure, and the interlaboratory component thereof.

(iii) The Administrator shall not select an accredited laboratory that is located at an elevation more than 152 meters (500 feet) higher than the elevation of the laboratory which performed the test used to obtain certification, unless the audit test is performed in a pressure vessel.

(5)(i) If emissions from a wood heater tested under paragraph (p)(3) of this section exceed the applicable weighted average emission limit by more than 50 percent, the Administrator shall so notify the manufacturer that certification for that model line is suspended effective 72 hours from the receipt of the notice, unless the suspension notice is withdrawn by the Administrator. The suspension shall remain in effect until withdrawn by the Administrator, or 30 days from its effective date (if a revocation notice under paragraph (p)(5)(ii) of this section is not issued within that period), or the date of final agency action on revocation, whichever occurs earlier.

(ii)(A) If emissions from a wood heater tested under paragraph (p)(3) of this section exceed the applicable weighted average emission limit, the Administrator shall notify the manufacturer that certification is revoked for that model line.

(B) A revocation notice under paragraph (p)(5)(ii)(A) shall become final and effective 60 days after receipt by the manufacturer, unless it is withdrawn, a hearing is requested under § 60.539, or the deadline for requesting a hearing is extended.

(C) The Administrator may extend the deadline for requesting a hearing for up to 60 days for good cause.

(D) A manufacturer may extend the deadline for requesting a hearing for up to six months, by agreeing to a voluntary suspension of certification.

(iii) Any notification under paragraph (p)(5)(i) or (p)(5)(ii) of this section shall include a copy of a preliminary test

report from the accredited laboratory. The accredited laboratory shall provide a preliminary test report to the Administrator within 10 days of the completion of testing, if a wood heater exceeds the applicable emission limit in § 60.532. The laboratory shall provide the Administrator and the manufacturer, within 30 days of the completion of testing, all documentation pertaining to the test, including the complete test report and raw data sheets, laboratory technician notes, and test results for all test runs.

(iv) Upon receiving notification of a test failure under paragraph (p)(5)(ii) of this section, the manufacturer may submit some or all of the remaining four wood heaters selected under paragraph (p)(2) of this section for testing at his own expense, in the order they were selected by the Administrator, at the laboratory that performed the emissions test for the Administrator.

(v) Whether or not the manufacturer proceeds under paragraph (p)(5)(iv) of this section, the manufacturer may submit any relevant information to the Administrator, including any other test data generated pursuant to this subpart. The manufacturer shall pay the expense of any testing performed for him.

(vi) The Administrator shall withdraw any notice issued under paragraph (p)(5)(ii) of this section if tests under paragraph (p)(5)(iv) of this section show either—

(A) That all four wood heaters tested for the manufacturer met the applicable weighted average emission limits, or

(B) That the second and third wood heaters selected met the applicable weighted average emission limits and the average of all three weighted averages (including the original audit test) was below the applicable weighted average emission limits.

(vii) The Administrator may withdraw any proposed revocation, if the Administrator finds that an audit test failure has been rebutted by information submitted by the manufacturer under paragraph (p)(5)(iv) of this section and/or (p)(5)(v) of this section or by any other relevant information available to him.

(viii) Any withdrawal of a proposed revocation shall be accompanied by a document setting forth its basis.

§ 60.534 Test methods and procedures.

Test methods and procedures in Appendix A of this part, except as provided under § 60.8(b), shall be used to determine compliance with the standards and requirements for certification under § 60.532 and § 60.533 as follows:

(a) Method 28 shall be used to establish the certification test conditions and the particulate matter weighted emission values.

(b) Emission concentrations may be measured with either:

(1) Method 5G, if a dilution tunnel sampling location is used, or

(2) Method 5H, if a stack location is used.

(c) Method 28A shall be used to determine that a wood combustion unit qualifies under the definition of wood heater in § 60.531(a). If such a determination is necessary, this test shall be conducted by an accredited laboratory.

(d) Appendix J is used as an optional procedure in establishing the overall thermal efficiency of wood heaters. (To be proposed separately.)

(e)(1) The manufacturer of an affected facility shall notify the Administrator of the date that certification testing is scheduled to begin. (A notice from the testing lab containing the information required in § 60.533(f)(1) may be used to satisfy this requirement.) This notice shall be at least 30 days before the start of testing. The notification of testing shall be in writing, and include the manufacturer's name and address, the testing laboratory's name, the model name and number (or, if unavailable, some other way to distinguish between models), and the dates of testing.

(2) Any emission testing conducted on the wood heater for which notice was delivered shall be presumed to be certification testing if such testing occurs on or after the scheduled date of testing and before a test report is submitted to the Administrator. If certification testing is interrupted for more than 24 hours, the laboratory shall notify the Administrator by telephone, as soon as practicable, and also by letter, stating why the testing was interrupted and when it is expected to be resumed.

(3) A manufacturer or laboratory may change the date that testing is scheduled to begin by notifying the Administrator at least 14 days before the start of testing. Notification of schedule change shall be made at least two working days prior to the originally scheduled test date. This notice of rescheduling shall be made by telephone or other expeditious means and shall be documented in writing and sent concurrently.

(4) A model line may be withdrawn from testing before the certification test is complete, provided the wood heater is sealed in accordance with § 60.535(g). The manufacturer shall notify the Administrator 30 days before the resumption of testing.

(5) The manufacturer or laboratory shall notify the Administrator if a test is not completed within the time allotted as set forth in the notice of testing. The notification shall be made by the end of the allotted testing period by telephone or other expeditious means, and documented in writing sent concurrently, and shall contain the dates when the test will be resumed. Unless otherwise approved by the Administrator, failure to conduct a certification test as scheduled without notifying the Administrator of any schedule change 14 days prior to the schedule or revised test dates will result in voiding the notification. In the case of a voided notification, the manufacturer shall provide the Administrator with a second notification at least 30 days prior to the new test dates. The Administrator may waive the requirement for advance notice for test resumptions.

(f) The testing laboratory shall allow the manufacturer to observe certification testing. However, manufacturers shall not involve themselves in the conduct of the test after the pretest burn (as defined by EPA Method 28) has begun. Communications between the manufacturer and laboratory personnel regarding operation of the wood heater shall be limited to written communications transmitted prior to the first pretest burn of the certification series. Written communications between the manufacturer and laboratory personnel may be exchanged during the certification test only if deviations from the test procedures are observed that constitute improper conduct of the test. All communications shall be included in the test documentation required to be submitted under § 60.533(b)(4) and shall be consistent with instructions provided in the owner's manual required under § 60.536(k), except to the extent that they address details of the certification tests that would not be relevant to owners.

§ 60.535 Laboratory accreditation.

(a)(1) A laboratory may apply for accreditation by the Administrator to conduct wood heater certification tests pursuant to § 60.533. The application shall be in writing to: Emission Measurement Branch (MD-13), U.S. EPA, Research Triangle Park, North Carolina 27711, Attn: Wood Heater Laboratory Accreditation.

(2) For the period between proposal of this subpart through June 30, 1988, an applicant may elect to have his application determined under the

requirements of Subpart AAA proposed on February 18, 1987 (52 FR 4994).

(3) If accreditation is denied under this section, the Administrator shall give written notice to the laboratory setting forth the basis for his determination.

(b) In order for a test laboratory to qualify for accreditation the laboratory must:

(1) Submit its written application providing the information related to laboratory equipment and management and technical experience of laboratory personnel. Applications from laboratories shall establish that:

(i) Laboratory personnel have a total of one year of relevant experience in particulate measurement, including at least three months experience in measuring particulate emissions from wood heaters,

(ii) The laboratory has the equipment necessary to perform testing in accordance with either § 60.534(b) (1) or (2), and

(iii) Laboratory personnel have experience in test management or laboratory management.

(2) Have no conflict of interest and receive no financial benefit from the outcome of certification testing conducted pursuant to § 60.533,

(3) Agree to enter into a contract as described in § 60.533(g) with each wood heater manufacturer for whom a certification test has been performed.

(4) [Reserved],

(5) Demonstrate proficiency to achieve reproducible results with at least one test method and procedure in § 60.534(b), by:

(i) Performing a test consisting of at least eight test runs (two in each of the four burn rate categories) on a wood heater identified by the Administrator,

(ii) Providing the Administrator at least 30 days prior notice of the test to afford the Administrator the opportunity to have an observer present, and

(iii) Submitting to the Administrator all documentation pertaining to the test, including a complete test report and raw data sheets, laboratory technical notes, and test results for all test runs,

(6) Be located in the continental United States,

(7) Agree to participate annually in a proficiency testing program conducted by the Administrator,

(8) Agree to allow the Administrator access to observe certification testing,

(9) Agree to comply with a reporting and recordkeeping requirements that affect testing laboratories, and

(10) Agree to accept the reasonable cost of an RCA test (as determined by the Administrator) if it is selected to conduct the RCA test of a model line originally tested for certification at another laboratory.

(c) Laboratories accredited by the State of Oregon prior to January 1, 1988, may be accredited by the Administrator without regard to the requirements in paragraphs (b)(1) and (b)(5) of this section, provided that the laboratory requests the accreditation in writing and, in addition to other applicable requirements, certifies under penalty of law that the information used in obtaining Oregon accreditation satisfied applicable requirements of Oregon law.

(d) [Reserved]

(e)(1) The Administrator may revoke EPA laboratory accreditation if he determines that the laboratory:

(i) No longer satisfies the requirements for accreditation in paragraph (b) or (c),

(ii) Does not follow required procedures or practices,

(iii) Had falsified data or otherwise misrepresented emission data,

(iv) [Reserved]

(v) Failed to participate in a proficiency testing program, in accordance with its commitment under paragraph (b)(5) of this section, or

(vi) Failed to seal the wood heater in accordance with paragraph (g) of this section.

(2) Revocation of accreditation under this paragraph shall not take effect until the laboratory concerned has been given written notice by the Administrator setting forth the basis for the proposed determination and an opportunity for a hearing under § 60.539. However, if revocation is ultimately upheld, all tests conducted by the laboratory after written notice was given may, at the discretion of the Administrator, be declared invalid.

(f) Unless revoked sooner, a certificate of accreditation granted by the Administrator shall be valid:

(1) For five years from the date of issuance, for certificates issued under paragraph (b) of this section, or

(2) Until July 1, 1990, for certificates issued under paragraph (c) of this section.

(g) A laboratory accredited by the Administrator shall seal any wood heater on which it performed certification tests, immediately upon completion or suspension of certification testing, by using a laboratory-specific seal.

§ 60.536 Permanent label, temporary label, and owner's manual.

(a)(1) Each affected facility manufactured on or after July 1, 1988, or offered for sale at retail on or after July 1, 1990, shall have a permanent label affixed to it that meets the requirements of this section.

(2) Except for wood heaters subject to § 60.530 (e), (f), or (g), the permanent label shall contain the following information:

(i) Month and year of manufacture,

(ii) Model name or number, and

(iii) Serial number.

(3) The permanent label shall:

(i) Be affixed in a readily visible or accessible location,

(ii) Be at least 3½ inches long and 2 inches wide,

(iii) Be made of a material expected to last the lifetime of the wood heater,

(iv) Present required information in a manner so that it is likely to remain legible for the lifetime of the wood heater, and

(v) Be affixed in such a manner that it cannot be removed from the appliance without damage to the label.

(4) The permanent label may be combined with any other label, as long as the required information is displayed, and the integrity of the permanent label is not compromised.

(b) If the wood heater belongs to a model line certified under § 60.533, and has not been found to exceed the applicable emission limits or tolerances through quality assurance testing, one of the following statements, as appropriate, shall appear on the permanent label:

U.S. ENVIRONMENTAL PROTECTION AGENCY

Certified to comply with July, 1988, particulate emission standards.

Not approved for sale after June 30, 1992.

or

U.S. ENVIRONMENTAL PROTECTION AGENCY

Certified to comply with July, 1990, particulate emission standards.

(c)(1) If compliance is demonstrated under § 60.530(c), the following statement shall appear on the permanent label:

U.S. ENVIRONMENTAL PROTECTION AGENCY

Certified under 40 CFR 60.530(c). Not approved for sale after June 30, 1992.

(2) If compliance is demonstrated under § 60.533(h), one of the following statements, as appropriate, shall appear on the permanent label:

U.S. ENVIRONMENTAL PROTECTION AGENCY

Certified under 40 CFR 60.533(h) to comply with July, 1988 particulate emissions standards. Not approved for sale after June 30, 1992.

or

U.S. ENVIRONMENTAL PROTECTION AGENCY

Certified under 40 CFR 60.533(h), to comply with July, 1990 particulate emissions standards.

(d) Any label statement under paragraph (b) or (c) of this section constitutes a representation by the manufacturer as to any wood heater that bears it:

(1) That certification was in effect at the time the wood heater left the possession of the manufacturer,

(2) That the manufacturer was, at the time the label was affixed, conducting a quality assurance program in conformity with § 60.533(o),

(3) That as to any wood heater individually tested for emissions by the manufacturer under § 60.533(o)(3), that it met the applicable emissions limits, and

(4) That as to any wood heater individually inspected for tolerances under § 60.533(o)(2), that the wood heater is within applicable tolerances.

(e) If an affected facility is exempt from the emission limits in § 60.532 under the provisions of § 60.530(d), the following statement shall appear on the permanent label:

U.S. ENVIRONMENTAL PROTECTION AGENCY

Not certified. Approved for sale until June 30, 1991.

(f)(1) If an affected facility is manufactured in the U.S. for export, the following statement shall appear on the permanent label:

U.S. ENVIRONMENTAL PROTECTION AGENCY

Export stove. May not be operated within the United States.

(2) If an affected facility is manufactured for use for research and development purposes as provided in § 60.530(f), the following statement shall appear on the permanent label:

U.S. ENVIRONMENTAL PROTECTION AGENCY

Not certified. Research Stove. Not approved for sale.

(3) If an affected facility is a coal-only heater as defined in § 60.530, the following statement shall appear on the permanent label:

U.S. ENVIRONMENTAL PROTECTION AGENCY

This heater is only for burning coal. Use of any other solid fuel except for coal ignition purposes is a violation of Federal law.

(g) Any affected facility that does not qualify for labeling under any of paragraphs (b) through (f) of this section shall bear one of the following labels:

(1) If the test conducted under § 60.533(n) indicates that the facility does not meet applicable emissions limits:

U.S. ENVIRONMENTAL PROTECTION AGENCY

Not certified. Does not meet EPA particulate emission standards. IT IS AGAINST THE LAW TO OPERATE THIS WOOD HEATER.

(2) If the test conducted under § 60.533(n) indicates that the facility does meet applicable emissions limits:

U.S. ENVIRONMENTAL PROTECTION AGENCY

Not certified. Meets EPA particulate emission standards.

(3) If the facility has not been tested as required by § 60.533(e):

U.S. ENVIRONMENTAL PROTECTION AGENCY

Not certified. Not tested. Not approved for sale. IT IS AGAINST THE LAW TO OPERATE THIS WOOD HEATER.

(h) For affected facilities equipped with catalytic combustors, the following statement shall appear on the permanent label:

This wood heater contains a catalytic combustor, which needs periodic inspection and replacement for proper operation. Consult owner's manual for further information. It is against the law to operate this wood heater in a manner inconsistent with operating instructions in the owner's manual, or if the catalytic element is deactivated or removed.

(i) An affected facility permanently labeled under paragraph (b) or (c) of this section shall have attached to it a temporary label that shall contain only the following:

(1) A statement indicating the compliance status of the model. The statement shall be one of the statements provided in Appendix I, Section 2.2.1. Instructions on the statement to select are provided in Appendix I.

(2) A graphic presentation of the composite particulate matter emission rate as determined in the certification test, or as determined by the Administrator if the wood heater is certified under § 60.530(c). The method for presenting this information is provided in Appendix I, Section 2.2.2.

(3) A graphic presentation of the overall thermal efficiency of the model. The method for presenting this information is provided in Appendix I, Section 2.2.3. At the discretion of the manufacturer, either the actual measured efficiency of the model or its estimated efficiency may be used for purposes of this paragraph. The actual efficiency is the efficiency measured in tests conducted pursuant to § 60.534(d). The estimated efficiency shall be 72 percent if the model is catalyst-equipped and 63 percent if the model is not catalyst equipped, and 78 percent if the model is designed to burn wood pellets for fuel. Wood heaters certified under § 60.530(c) shall use these estimated efficiencies.

(4) A numerical expression of the heat output range of the unit, in British thermal units per hour (Btu/hr) rounded to the nearest 100 Btu/hr.

(i) If the manufacturer elects to report the overall efficiency of the model based on test results pursuant to paragraph (i)(3) of this section, he shall report the heat output range measured during the efficiency test. If an accessory device is used in the certification test to achieve any low burn rate criterion specified in this subpart, and if this accessory device is not sold as a part of the wood heater, the heat output range shall be determined using the formula in paragraph (i)(4)(ii) of this section based upon the lowest sustainable burn rate achieved without the accessory device.

(ii) If the manufacturer elects to use the estimated efficiency as provided in paragraph (i)(3) of this section, he shall estimate the heat output of the model as follows:

$HO_E = (19{,}140) \times (\text{Estimated overall efficiency}/100) \times BR$, where

HO_E = Estimated heat output in Btu/hr

BR = Burn rate in dry kilograms of test fuel per hour

(5) Statements regarding the importance of operation and maintenance. (Instructions regarding which statements must be used are provided in Appendix I, Section 2.), and

(6) The manufacturer and the identification of the model.

(j) The removable label of an affected facility permanently labeled under paragraph (e), (f)(3) or (g) of this section shall:

(1) Contain only the information provided for in Appendix I, Section 2;

(2) Be affixed to a location on the wood heater that is readily seen and accessible when the wood heater is offered for sale to consumers by any commercial owner;

(3) Not be combined with any other label or information;

(4) Be attached to the wood heater in such a way that it can be easily removed by the consumer upon purchase;

(5) Be printed on 90 pound bond paper in black ink with a white background except that models that are not otherwise exempted which do not meet the applicable emission limits, or have not been tested pursuant to this subpart, shall be on a red background as described in Appendix I, Section 2.5;

(6) Have dimensions of five inches by seven inches as described in Appendix I, Section 2.1;

(7) Have adhesive backings and other means to preserve the label to prevent the removal or destruction of temporary labels on wood heaters displayed by retailers; and

(8) Have wording, presentation of the graphic data, and typography as presented in Appendix 1.

(k)(1) Each affected facility offered for sale by a commercial owner must be accompanied by an owner's manual that shall contain the information listed in paragraph (k)(2) of this section (pertaining to installation), and paragraph (k)(3) of this section (pertaining to operation and maintenance) of this section. Such information shall be adequate to enable consumers to achieve optimal emissions performance. Such information shall be consistent with the operating instructions provided by the manufacturer to the laboratory for operating the wood heater during certification testing, except for details of the certification test that would not be relevant to the ultimate purchaser.

(2) Installation information: Requirements for achieving proper draft.

(3) Operation and maintenance information:

(i) Wood loading procedures, recommendations on wood selection, and warnings on what fuels not to use, such as treated wood, colored paper, cardboard, solvents, trash and garbage,

(ii) Fire starting procedures,

(iii) Proper use of air controls,

(iv) Ash removal procedures,

(v) Instructions on gasket replacement,

(vi) For catalytic models, information on the following pertaining to the catalytic combustor: Procedures for achieving and maintaining catalyst activity, maintenance procedures, procedures for determining deterioration or failure, procedures for replacement, and information on how to exercise warranty rights, and

(vii) For catalytic models, the following statement—

This wood heater contains a catalytic combustor, which needs periodic inspection and replacement for proper operation. It is against the law to operate this wood heater in a manner inconsistent with operating instructions in this manual, or if the catalytic element is deactivated or removed.

(4) Any manufacturer using EPA model language contained in Appendix I to satisfy any requirement of this paragraph shall be in compliance with that requirement, provided that the particular model language is printed in full, with only such changes as are necessary to ensure accuracy for the particular model line.

(l) Wood heaters that are affected by this subpart, but that have been owned and operated by a noncommercial owner, are not subject to paragraphs (j) and (k) of this section when offered for resale.

§ 60.537 Reporting and recordkeeping.

(a)(1) Each manufacturer who holds a certificate of compliance under § 60.533(e) or § 60.533(h) for a model line shall maintain records containing the information required by this paragraph with respect to that model line. Each manufacturer of a model line certified under § 60.530(c) shall maintain the information required by paragraphs (a)(3) and (a)(5) of this section for that model line.

(2)(i) All documentation pertaining to the certification test used to obtain certification, including the full test report and raw data sheets, laboratory technician notes, calculations, and the test results for all test runs.

(ii) Where a model line is certified under § 60.533(h) and later certified under § 60.533(e), all documentation pertaining to the certification test used to obtain certification in each instance shall be retained.

(3) For parameter inspections conducted pursuant to § 60.533(o)(2), information indicating the extent to which tolerances for components that affect emissions as listed in § 60.533(k)(2) were inspected, and at what frequency, the results of such inspections, remedial actions taken, if any, and any follow-up actions such as additional inspections,

(4) For emissions tests conducted pursuant to § 60.533(o)(3), all test reports, data sheets, laboratory technician notes, calculations, and test results for all test runs, the remedial actions taken, if any, and any follow-up actions such as additional testing,

(5) The number of affected facilities that are sold each year, by certified model line,

(b)(1) Each accredited laboratory shall maintain records consisting of all documentation pertaining to each certification test, including the full test report and raw data sheets, technician notes, calculations, and the test results for all test runs.

(2) Each accredited laboratory shall report to the Administrator by the 8th day of each month between April 1, 1987 and July 1, 1990:

(i) The number and identification of wood heaters scheduled for testing and the type of testing (e.g., EPA certification, Oregon certification, research and development testing),

(ii) The estimated date on which certification testing could commence for a wood heater, if such a test were requested on the first day of that month

(iii) The identification of the wood heaters tested during the previous month.

(3) Each accredited laboratory shall report to the Administrator within 24 hours whenever a manufacturer which has notified the laboratory that it intends to apply for alternative certification for a model line fails to submit on schedule a representative unit of that model line for certification testing.

(c) Any wood heater upon which certification tests were performed based upon which certification was granted under § 60.533(e) shall be retained (sealed and unaltered) at the manufacturer's facility for as long as the model line in question is manufactured. Any such wood heater shall be made available upon request to the Administrator for inspection and testing.

(d) [Reserved]

(e) Any manufacturer seeking exemption under § 60.530(d) shall:

(1) Report to the Administrator by August 1, 1988, the number of wood heaters manufactured between July 1, 1987 and June 30, 1988, and evidence that he was a manufacturer of wood heaters as of January 1, 1987,

(2) Report to the Administrator by September 1, 1989, the number of uncertified wood heaters manufactured that were subject to paragraph § 60.530(d), between July 1, 1988, and June 30, 1989,

(3) Maintain wood heater production records covering the period July 1, 1987 to July 1, 1989,

(4) Report to the Administrator by July 1, 1988, that the manufacturer intends to apply for this exemption.

(f) Each manufacturer of an affected facility certified under § 60.533 shall submit a report to the Administrator every 2 years following issuance of a certificate of compliance for each model line. This report shall certify that no changes in the design or manufacture of this model line have been made that require recertification under § 60.533(k).

(g) Each manufacturer shall maintain records of the model and number of wood heaters exempted under § 60.530(f).

(h) Each commercial owner of a wood heater previously owned by a noncommercial owner for his personal use shall maintain records of the name and address of the previous owner.

(i)(1) Unless otherwise specified, all records required under this section shall be maintained by the manufacturer or

commercial owner of the affected facility for a period of no less than 5 years.

(2) Unless otherwise specified, all reports to the Administrator required under this subpart shall be made to: Stationary Source Compliance Division (EN-341), U.S. EPA, 401 M Street SW., Washington, DC, 20460 Attention: Wood Heater Program.

(3) A report to the Administrator required under this subpart shall be deemed to have been made when it is properly addressed and mailed, or placed in the possession of a commercial courier service.

§ 60.538 Prohibitions.

(a) No person shall operate an affected facility that does not have affixed to it a permanent label pursuant to § 60.536 (b), (c), (e), (f)(2), (f)(3), or (9)(2).

(b) No manufacturer shall advertise for sale, offer for sale, or sell an affected facility that—

(1) Does not have affixed to it a permanent label pursuant to § 60.536, and

(2) Has not been tested when required by § 60.533(n).

(c) On or after July 1, 1990, no commercial owner shall advertise for sale, offer for sale, or sell an affected facility that does not have affixed to it a permanent label pursuant to § 60.536 (b), (c), (e), (f)(1), (f)(3), (g)(1) or (g)(2). No person shall advertise for sale, offer for sale, or sell an affected facility labeled under § 60.536(f)(1) except for export.

(d)(1) No commercial owner shall advertise for sale, offer for sale or sell an affected facility permanently labeled under § 60.536 (b) or (c) unless:

(i) The affected facility has affixed to it a removable label pursuant to § 60.536 of this subpart,

(ii) He provides any purchaser or transferee with an owner's manual pursuant to § 60.536(k) of this subpart, and

(iii) He provides any purchaser or transferee with a copy of the catalytic combustor warranty (for affected facilities with catalytic combustors).

(2) No commercial owner shall advertise for sale, offer for sale, or sell an affected facility permanently labeled under § 60.536 (e), (f)(3), or (g), unless the affected facility has affixed to it a removable label pursuant to § 60.536 of this subpart. This prohibition does not apply to wood heaters affected by this subpart that have been previously owned and operated by a noncommercial owner.

(3) A commercial owner other than a manufacturer complies with the requirements of paragraph (d) of this section if he—

(i) Receives the required documentation from the manufacturer or a previous commercial owner and

(ii) Provides that documentation unaltered to any person to whom the wood heater that it covers is sold or transferred.

(e) In any case in which the Administrator revokes a certificate of compliance for the knowing submission of false or inaccurate information, or other fraudulent acts, he may give notice of that revocation and the grounds for it to all commercial owners. From and after the date of receipt of that notice no commercial owner may sell any wood heater covered by the revoked certificate (other than to the manufacturer) unless:

(1) The wood heater has been tested as required by § 60.533(n) and labeled as required by § 60.536(g) or

(2) The model line has been recertified in accordance with this subpart.

(f) No person shall install or operate an affected facility except in a manner consistent with the instructions on its permanent label and in the owner's manual pursuant to § 60.536(l) of this subpart.

(g) No person shall operate an affected facility which was originally equipped with a catalytic combustor if the catalytic element is deactivated or removed.

(h) No person shall operate an affected facility that has been physically altered to exceed the tolerance limits of its certificate of compliance.

(i) No person shall alter, deface, or remove any permanent label required to be affixed pursuant to § 60.536 of this subpart.

§ 60.539 Hearing and appeal procedures.

(a)(1) In any case where the Administrator—

(i) Denies an application under § 60.530(c) or § 60.533(e),

(ii) Issues a notice of revocation of certification under § 60.533(l),

(iii) Denies an application for laboratory accreditation under § 60.535, or

(iv) Issues a notice of revocation of laboratory accreditation under § 60.535(e), the manufacturer or laboratory affected may request a hearing under this section within 30 days following receipt of the required notification of the action in question.

(2) In any case where the Administrator issues a notice of revocation under § 60.533(p), the manufacturer may request a hearing under this section with the time limits set out in § 60.533(p)(5).

(b) Any hearing request shall be in writing, shall be signed by an authorized representative of the petitioning manufacturer or laboratory, and shall include a statement setting forth with particularity the petitioner's objection to the Administrator's determination or proposed determination.

(c)(1) Upon receipt of a request for a hearing under paragraph (a) of this section, the Administrator shall request the Chief Administrative Law Judge to designate an Administrative Law Judge as Presiding Officer for the hearing. If the Chief Administrative Law Judge replies that no Administrative Law Judge is available to perform this function, the Administrator shall designate a Presiding Officer who has not had any prior responsibility for the matter under review, and who is not subject to the direct control or supervision of someone who has had such responsibility.

(2) The hearing shall commence as soon as practicable at a time and place fixed by the Presiding Officer.

(3)(i) A motion for leave to intervene in any proceeding conducted under this section must set forth the grounds for the proposed intervention, the position and interest of the movant and the likely impact that intervention will have on the expeditious progress of the proceeding. Any person already a party to the proceeding may file an answer to a motion to intervene, making specific reference to the factors set forth in the foregoing sentence and paragraph (c)(3)(iii) of this section within ten (10) days after service of the motion for leave to intervene.

(ii) A motion for leave to intervene in a proceeding must ordinarily be filed before the first prehearing conference or, in the absence of a prehearing conference, prior to the setting of a time and place for a hearing. Any motion filed after that time must include, in addition to the information set forth in paragraph (c)(3)(i) of this section, a statement of good cause for the failure to file in a timely manner. The intervenor shall be bound by any agreements, arrangements and other matters previously made in the proceeding.

(iii) A motion for leave to intervene may be granted only if the movant demonstrates that his presence in the proceeding would not unduly prolong or otherwise prejudice the adjudication of the rights of the original parties, and that movant may be adversely affected by a final order. The intervenor shall become a full party to the proceeding upon the granting of leave to intervene.

(iv) Persons not parties to the proceeding may move for leave to file amicus curiae briefs. The movant shall state his interest and the reasons why the proposed amicus brief is desirable. If the motion is granted, the Presiding Officer or Administrator shall issue an order setting the time for filing such brief. An amicus curia may participate in any briefing after his motion is granted, and shall be served with all briefs, reply briefs, motions, and orders relating to issues to be briefed.

(4) In computing any period of time prescribed or allowed in this subpart, the day of the event from which the designated period begins to run shall not be included. Saturdays, Sundays, and Federal legal holidays shall be included. When a stated time expires on a Saturday, Sunday or legal holiday, the stated time period shall be extended to include the next business day.

(d)(1) Upon his appointment the Presiding Officer shall establish a hearing file. The file shall consist of the notice issued by the Administrator under §§ 60.530(c), 60.533(e), 60.533(l), 60.533(p), 60.535(a), or 60.535(e), together with any accompanying material, the request for a hearing and the supporting data submitted therewith, and all documents relating to the request for certification or accreditation, or the proposed revocation of either.

(2) The hearing file shall be available for inspection by any party, to the extent authorized by law, at the office of the Presiding Officer, or other place designated by him.

(e) Any party may appear in person, or may be represented by counsel or by any other duly authorized representative.

(f)(1) The Presiding Officer upon the request of any party, or at his discretion, may order a prehearing conference at a time and place specified by him to consider the following:

(i) Simplification of the issues,

(ii) Stipulations, admissions of fact, and the introduction of documents,

(iii) Limitation of the number of expert witnesses,

(iv) Possibility of agreement disposing of all or any of the issues in dispute,

(v) Such other matters as may aid in the disposition of the hearing, including such additional tests as may be agreed upon by the parties.

(2) The results of the conference shall be reduced to writing by the Presiding Officer and made part of the record.

(g)(1) Hearings shall be conducted by the Presiding Officer in an informal but orderly and expeditious manner. The parties may offer oral or written evidence, subject to the exclusion by the Presiding Officer of irrelevant, immaterial and repetitious evidence.

(2) Witnesses will not be required to testify under oath. However, the Presiding Officer shall call to the attention of witnesses that their statements may be subject to penalties under title 18 U.S.C. 1001 for knowingly making false statements or representations or using false documents in any matter within the jurisdiction of any department or agency of the United States.

(3) Any witness may be examined or cross-examined by the Presiding Officer, the parties, or their representatives.

(4) Hearings shall be recorded verbatim. Copies of transcripts of proceedings may be purchased by the applicant from the reporter.

(5) All written statements, charts, tabulations, and similar data offered in evidence at the hearings shall, upon a showing satisfactory to the Presiding Officer of their authenticity, relevancy, and materiality, be received in evidence and shall constitute a part of the record.

(h)(1) The Presiding Officer shall make an initial decision which shall include written findings and conclusions and the reasons or basis therefor on all the material issues of fact, law, or discretion presented on the record. The findings, conclusions, and written decision shall be provided to the parties and made a part of the record. The initial decision shall become the decision of the Administrator without further proceedings unless there is an appeal to the Administrator or motion for review by the Administrator. Except as provided in paragraph (h)(3) of this section, any such appeal shall be taken within 20 days of the date the initial decision was filed.

(2) On appeal from or review of the initial decision the Administrator shall have all the powers which he would have in making the initial decision including the discretion to require or allow briefs, oral argument, the taking of additional evidence or the remanding to the Presiding Officer for additional proceedings. The decision by the Administrator shall include written findings and conclusions and the reasons or basis therefor on all the material issues of fact, law, or discretion presented on the appeal or considered in the review.

(3) In any hearing requested under paragraph (a)(2) of this section the Presiding Officer shall render his initial decision within 60 days of that request. Any appeal to the Administrator shall be taken within 10 days of the initial decision, and the Administrator shall render his decision in that appeal within 30 days of the filing of the appeal.

§ 60.539a Delegation of Authority

(a) In delegating implementation and enforcement authority to a State under section 111(c) of the Act, the authorities contained in paragraph (b) of this section shall be retained by the Administrator and not transferred to a State.

(b) Authorities that shall not be delegated to States:

(1) Section 60.530(c), granting of exemptions for Oregon-certified wood heaters,

(2) Section 60.531, Determinations of applicability,

(3) Section 60.533, Compliance and certification,

(4) Section 60.534, Test methods and procedures,

(5) Section 60.535, Laboratory accreditation,

(6) Section 60.536(i)(2), determination of emission rates for purposes of labeling wood heaters certified under § 60.530(c),

(7) Section 60.537, Reporting and recordkeeping,

(8) Section 60.538(e), revocation of certification, and

(9) Section 60.539, Hearings and appeals procedures.

§ 60.539b General provisions exclusions.

The following provisions of Subpart A of Part 60 do not apply to this subpart:

(a) Section 60.7,

(b) Section 60.8(a), (c), (d), (e), and (f), and

(c) Section 60.15(d).

3. By adding four new Reference Methods (Method 5G, 5H, 28, and 28A) to Appendix A to read as follows:

Appendix A—Reference Methods

Method 5G—Determination of Particulate Emissions From Wood Heaters From a Dilution Tunnel Sampling Location

1. Applicability and Principle

1.1 Applicability. This method is applicable for the determination of particulate matter emissions from wood heaters.

1.2 Principle. Particulate matter is withdrawn proportionally at a single point from a total collection hood and sampling tunnel that combines the wood heater exhaust with ambient dilution air. The particulate matter is collected on two glass fiber filters in series. The filters are maintained at a temperature of no greater than 32 °C (90 °F). The particulate mass is determined gravimetrically after removal of uncombined water.

There are three sampling train approaches described in this method: (1) One dual-filter dry sampling train operated at about 0.015 m^3/min, (2) One dual-filter plus impingers sampling train operated at about 0.015 m^3/min, and (3) two dual-filter dry sampling trains operated simultaneously at any flow

rate. Options (2) and (3) are referenced in Section 7 of this method. The dual-filter sampling train equipment and operation, option (1), are described in detail in this method.

2. Apparatus

2.1 Sampling Train. The sampling train configuration is shown in Figure 5G–1 and consists of the following components:

2.1.1 Probe. Stainless steel (e.g., 316 or grade more corrosion resistant) or glass about 95 mm (⅜ in.) I.D., 0.6 m (24 in.) in length. If made of stainless steel, the probe shall be constructed from seamless tubing.

2.1.2 Pitot Tube. Type S, as described in Section 2.1 of Method 2. The Type S pitot tube assembly shall have a known coefficient, determined as outlined in Method 2, Section 4.

Alternatively, a standard pitot may be used as described in Method 2, Section 2.1.

2.1.3 Differential Pressure Gauge. Inclined manometer or equivalent device, as described in Method 2, Section 2.2. One manometer shall be used for velocity head (Δp) readings and another (optional) for orifice differential pressure readings (ΔH).

2.1.4 Filter Holders. Two each made of borosilicate glass, stainless steel, or Teflon, with a glass frit or stainless steel filter support and a silicone rubber, Teflon, or Viton gasket. The holder design shall provide a positive seal against leakage from the outside or around the filters. The filter holders shall be placed in series with the backup filter holder located 25 to 100 mm (1 to 4 in.) downstream from the primary filter holder. The filter holder shall be capable of holding a filter with a 100 mm (4 in.) diameter, except as noted in Section 7.

Note: Mention of trade names or specific product does not constitute endorsement by the Environmental Protection Agency.

2.1.5 Filter Temperature Monitoring System. A temperature gauge capable of measuring temperature to within 1.5 percent of absolute temperature. The gauge shall be installed at the exit side of the front filter holder so that the sensing tip of the temperature gauge is in direct contact with the sample gas or in a thermowell as shown in Figure 5G–1. The temperature gauge shall comply with the calibration specifications in Method 2, Section 4. Alternatively, the sensing tip of the temperature gauge may be installed at the inlet side of the front filter holder.

2.1.6 Dryer. Any system capable of removing water from the sample gas to less than 1.5 percent moisture (volume percent) prior to the metering system. System includes monitor for demonstrating that sample gas temperature is less than 20 °C (68 °F).

2.1.7 Metering System. Same as Method 5, Section 2.1.8.

2.1.8 Barometer. Mercury, aneroid, or other barometer capable of measuring atmospheric pressure to within 2.5 mm Hg (0.1 in. Hg).

2.1.9 Dilution Tunnel Gas Temperature Measurement. A temperature gauge capable of measuring temperature to within 1.5 percent of absolute temperature.

2.2 Dilution Tunnel. The dilution tunnel apparatus is shown in Figure 5G–2 and consists of the following components:

2.2.1 Hood. Constructed of steel with a minimum diameter of 0.3 m (1 ft) on the large end and a standard 0.15 to 0.3 m (0.5 to 1 ft) coupling capable of connecting to standard 0.15 to 0.3 m (0.5 to 1 ft) stove pipe on the small end.

2.2.2 90° Elbows. Steel 90° elbows, 0.15 to 0.3 m (0.5 to 1 ft) in diameter for connecting mixing duct, straight duct and damper (optional) assembly. There shall be at least two 90° elbows upstream of the sampling section (see Figure 5G–2).

2.2.3 Straight Duct. Steel, 0.15 to 0.3 m (0.5 to 1 ft) in diameter to provide the ducting for the dilution apparatus upstream of the sampling section. Steel duct, 0.15 m (0.5 ft) in diameter shall be used for the sampling section. In the sampling section, at least 1.2 m (4 ft) downstream of the elbow, shall be two holes (velocity traverse ports) at 90° to each other of sufficient size to allow entry of the pitot for traverse measurements. At least 1.2 m (4 ft) downstream of the velocity traverse ports, shall be one hole (sampling port) of sufficient size to allow entry of the sampling probe. Ducts of larger diameter may be used for the sampling section, provided the specifications for minimum gas velocity and the dilution rate range shown in Section 4 are maintained. The length of duct from the hood inlet to the sampling ports shall not exceed 9.1 m (30 ft).

2.2.4 Mixing Baffles. Steel semicircles (two) attached at 90° to the duct axis on opposite sides of the duct midway between the two elbows upstream of sampling section. The space between the baffles shall be about 0.3 m (12 in.).

2.2.5 Blower. Squirrel cage or other fan capable of extracting gas from the dilution tunnel of sufficient flow to maintain the velocity and dilution rate specifications in Section 4 and exhausting the gas to the atmosphere.

2.3 Sample Recovery. Probe brushes, wash bottles, sample storage containers, petri dishes, and a funnel as described in Method 5, Section 2.2.1 through 2.2.4, and 2.2.8, respectively, are needed.

2.4 Analysis. Glass weighing dishes, desiccator, analytical balance, beakers (250 ml or smaller), hygrometer, and temperature gauge as described in Method 5, Sections 2.3.1 through 2.3.3 and 2.3.5 through 2.3.7, respectively, are needed.

3. Reagents

3.1 Sampling. The reagents used in sampling are as follows:

3.1.1 Filters. Glass fiber filters with a minimum diameter of 100 mm (4 in.), without organic binder, exhibiting at least 99.95 percent efficiency (<0.05 percent penetration) on 0.3-micron dioctyl phthalate smoke particles. Gelman A/E 61631 has been found acceptable for this purpose.

3.1.2 Stopcock Grease. Same as Method 5, Section 3.1.5.

3.2 Sample Recovery. Acetone-reagent grade, same as Method 5, Section 3.2.

3.3 Analysis. Two reagents are required for the analysis:

3.3.1 Acetone. As in Section 3.2.

3.3.2 Desiccant. Anhydrous calcium sulfate, calcium chloride, or silica gel, indicating type.

4. Procedure

4.1 Dilution Tunnel. A schematic of a dilution tunnel is shown in Figure 5G–2. The dilution tunnel dimensions and other features are described in Section 2.2. Assemble the dilution tunnel sealing joints and seams to prevent air leakage. Clean the dilution tunnel with an appropriately sized, wire chimney brush before each certification test.

4.1.1 Draft Determination. Prepare the wood heater as in Method 28, Section 6.2.1. Locate the dilution tunnel hood centrally over the wood heater stack exhaust. Operate the dilution tunnel blower at the flow rate to be used during the test run. Measure the draft imposed on the wood heater by the dilution tunnel (i.e., the difference in draft measured with and without the dilution tunnel operating) as described in Method 28, Section 6.2.3. Adjust the distance between the top of the wood heater stack exhaust and the dilution tunnel hood so that the dilution tunnel induced draft is less than 1.25 Pa (0.005 in. H_2O). Have no fire in the wood heater, close the wood heater doors, and open fully the air supply controls during this check and adjustment.

4.1.2 Smoke Capture. During the pretest ignition period described in Method 28, Section 6.3, operate the dilution tunnel and visually monitor the wood heater stack exhaust. Operate the wood heater with the doors closed and determine that 100 percent of the exhaust gas is collected by the dilution tunnel hood. If less than 100 percent of the wood heater exhaust gas is collected, adjust the distance between the wood heater stack and the dilution tunnel hood until no visible exhaust gas is escaping. Stop the pretest ignition period, and repeat the draft determination procedure described in Section 4.1.1.

4.2 Velocity Measurements. During the pretest ignition period described in Method 28, Section 6.3, conduct a velocity traverse to identify the point of average velocity. This single point shall be used for measuring velocity during the test run.

4.2.1 Velocity Traverse. Measure the diameter of the duct at the velocity traverse port location through both ports. Calculate the duct area using the average of the two diameters. A pretest leak-check of pitot lines as in Method 2, Section 3.1, is recommended. Place the calibrated pitot tube at the centroid of the stack in either of the velocity traverse ports. Adjust the damper or similar device on the blower inlet until the velocity indicated by the pitot is approximately 220 m/min (715 fpm). Continue to read the Δp and temperature until the velocity has remained constant (less than 5 percent change) for 1 minute. Once a constant velocity is obtained at the centroid of the duct, perform a velocity traverse as outlined in Method 2, Section 3.3 using four points per traverse as outlined in Method 1. Measure the Δp and tunnel temperature at each traverse point and record the readings. Calculate the total gas flow rate using calculations contained in Method 2, Section 5. Verify that the flow rate is 4 ± 0.45 sm^3/min (140± 14 scfm); if not, readjust the damper, and repeat the velocity traverse. The moisture may be assumed to be 4 percent (100 percent relative humidity at 85

°F). Direct moisture measurements such as outlined in EPA Method 4 are also permissible.

Note: If burn rates exceed 3 kg/hr (6.6 lb/hr), dilution tunnel duct flow rates greater than 4 sm^3/min (140 scfm) and sampling section duct diameters larger than 150 mm (6 in.) are allowed. If larger ducts or flow rates are used, the sampling section velocity shall be at least 220 m/min (715 fpm). In order to ensure measurable particulate mass catch, it is recommended that the ratio of the average mass flow rate in the dilution tunnel to the average fuel burn rate be less than 150:1 if larger duct sizes or flow rates are used.

4.2.2 Testing Velocity Measurements. After obtaining velocity traverse results that meet the flow rate requirements, choose a point of average velocity and place the pitot and thermocouple at that location in the duct. Alternatively, locate the pitot and thermocouple at the duct centroid and calculate a velocity correction factor for the centroidal position. Mount the pitot to ensure no movement during the test run and seal the port holes to prevent any air leakage. Align the pitot to be parallel with the duct axis, at the measurement point. Check that this condition is maintained during the test run (about 30-minute intervals). Monitor the temperature and velocity during the pretest ignition period to ensure the proper flow rate is maintained. Make adjustments to the dilution tunnel flow rate as necessary.

4.3 Sampling.

4.3.1 Pretest Preparation. It is suggested that sampling equipment be maintained and calibrated according to the procedure described in APTD–0576.

Check and desiccate filters as described in Method 5, Section 4.1.1.

4.3.2 Preparation of Collection Train. During preparation and assembly of the sampling train, keep all openings where contamination can occur covered until just prior to assembly or until sampling is about to begin.

Using a tweezer or clean disposable surgical gloves, place one labeled (identified) and weighed filter in each of the filter holders. Be sure that each of the filters is properly centered and the gasket properly placed so as to prevent the sample gas stream from circumventing the filter. Check each of the filters for tears after assembly is completed.

Mark the probe with heat resistant tape or by some other method to denote the proper distance into the stack or duct.

Set up the train as in Figure 5G–1.

4.3.3 Leak-Check Procedures.

4.3.3.1 Pretest Leak-Check. A pretest leak-check is recommended, but not required. If the tester opts to conduct the pretest leak-check, conduct the leak-check as described in Method 5, Section 4.1.4.1. A vacuum 130 mm Hg (5 in. Hg) may be used instead of 380 mm Hg (15 in. Hg).

4.3.3.2 Post-Test Leak-Check. A leak-check is mandatory at the conclusion of each test run. The leak-check shall be done in accordance with the procedures described in Method 5, Section 4.1.4.1. A vacuum of 130 mm Hg (5 in. Hg) or the greatest vacuum measured during the test run, whichever is greater, may be used instead of 380 mm Hg (15 in. Hg).

4.3.4 Preliminary Determinations. Determine the pressure, temperature and the average velocity of the tunnel gases as in Section 4.2. Moisture content of diluted tunnel gases is assumed to be 4 percent for making flow rate calculations; the moisture content may be measured directly as in Method 4.

4.3.5 Sampling Train Operation. Position the probe inlet at the stack centroid, and block off the openings around the probe and porthole to prevent unrepresentative dilution of the gas stream. Be careful not to bump the probe into the stack wall when removing or inserting the probe through the porthole; this minimizes the chance of extracting deposited material.

Begin sampling at the start of the test run as defined in Method 28, Section 6.4.1. During the test run, maintain a sample flow rate proportional to the dilution tunnel flow rate (within 10 percent of the initial proportionality ratio) and a filter holder temperature of no greater than 32 °C (90 °F). The initial sample flow rate shall be approximately 0.015 m^3/min (0.5 cfm).

For each test run, record the data required on a data sheet such as the one shown in Figure 5G–3. Be sure to record the initial dry gas meter reading. Record the dry gas meter readings at the beginning and end of each sampling time increment and when sampling is halted. Take other readings as indicated on Figure 5G–3 at least once each 10 minutes during the test run. Since the manometer level and zero may drift because of vibrations and temperature changes, make periodic checks during the test run.

For the purposes of proportional sampling rate determinations, data from calibrated flow rate devices, such as glass rotameters, may be used in lieu of incremental dry gas meter readings. Proportional rate calculation procedures must be revised, but acceptability limits remain the same.

During the test run, make periodic adjustments to keep the temperature between (or upstream of) the filters at the proper level. Do not change sampling trains during the test run.

At the end of the test run (see Method 28, Section 6.4.6), turn off the coarse adjust valve, remove the probe from the stack, turn off the pump, record the final dry gas meter reading, and conduct a post-test leak-check, as outlined in Section 4.3.3. Also, leak-check the pitot lines as described in Method 2, Section 3.1; the lines must pass this leak-check in order to validate the velocity head data.

4.3.6 Calculation of Proportional Sampling Rate. Calculate percent proportionality (see Calculations, Section 6) to determine whether the run was valid or another test run should be made.

4.4 Sample Recovery. Begin recovery of the probe and filter samples as described in Method 5, Section 4.2, except that an acetone blank volume of about 50 ml or more may be used.

Treat the samples as follows:

Container No. 1. Carefully remove the filter from the primary filter holder and place it in its identified (labeled) petri dish container. Use a pair of tweezers and/or clean disposable surgical gloves to handle the filter. If it is necessary to fold the filter, do so such that the particulate cake is inside the fold. Carefully transfer to the petri dish any particulate matter and/or filter fibers which adhere to the filter holder gasket, by using a dry Nylon bristle brush and/or a sharp-edged blade. Seal the container.

Container No. 2. Remove the filter from the second filter holder using the same procedures as described above.

Note: The two filters may be placed in the same container for desiccation and weighing. Use the sum of the filter tare weights to determine the sample mass collected.

Container No. 3. Taking care to see that dust on the outside of the probe or other exterior surfaces does not get into the sample, quantitatively recover particulate matter or any condensate from the probe and filter holders by washing and brushing these components with acetone and placing the wash in a labeled (No. 3) glass container. At least three cycles of brushing and rinsing are necessary.

Between sampling runs, keep brushes clean and protected from contamination.

After all acetone washings and particulate matter have been collected in the sample containers, tighten the lids on the sample containers so that the acetone will not leak out when transferred to the laboratory weighing area. Mark the height of the fluid levels to determine whether leakage occurs during transport. Label the containers clearly to identify contents. Requirements for capping and transport of sample containers are not applicable if sample recovery and analysis occur in the same room.

4.5 Analysis. Record the data required on a sheet such as the one shown in Figure 5G–4. Use the same analytical balance for determining tare weight and final sample weights. Handle each sample container as follows:

Containers No. 1 and 2. Leave the contents in the sample containers or transfer the filters and loose particulate to tared glass weighing dishes. Desiccate for no more than 36 hours before the initial weighing, weigh to a constant weight, and report the results to the nearest 0.1 mg. For purposes of this section, the term "constant weight" means a difference of no more than 0.5 mg or 1 percent of total sample weight (less tare weight), whichever is greater, between two consecutive weighings, with no less than 2 hours between weighings.

Container No. 3. Note the level of liquid in the container, and confirm on the analysis sheet whether leakage occurred during transport. If a noticeable amount of leakage has occurred, either void the sample or use methods, subject to the approval of the Administrator, to correct the final results. Determination of sample leakage is not applicable if sample recovery and analysis occur in the same room. Measure the liquid in this container either volumetrically to within 1 ml or gravimetrically to within 0.5 g. Transfer the contents to a tared 250 ml or smaller beaker and evaporate to dryness at ambient temperature and pressure. Desiccate and weigh to a constant weight. Report the results to the nearest 0.1 mg.

"Acetone Blank" Container. Measure acetone in this container either volumetrically or gravimetrically. Transfer the acetone to a tared 250 ml or smaller beaker and evaporate to dryness at ambient temperature and pressure. Desiccate and weigh to a constant weight. Report the results to the nearest 0.1 mg.

5. Calibration

Maintain a laboratory record of all calibrations.

5.1 Pitot Tube. The Type S pitot tube assembly shall be calibrated according to the procedure outlined in Method 2, Section 4, prior to the first certification test and checked semiannually, thereafter. A standard pitot need not be calibrated but shall be inspected and cleaned, if necessary, prior to each certification test.

5.2 Volume Metering System.

5.2.1 Initial and Periodic Calibration. Before its initial use and at least semiannually thereafter, calibrate the volume metering system as described in Method 5, Section 5.3.1, except that the wet test meter with a capacity of 3.0 liters/rev (0.1 ft^3/rev) may be used. Other liquid displacement systems accurate to within 1 percent, may be used as calibration standards.

Procedures and equipment specified in Method 5, Section 7, for alternative calibration standards, including calibrated dry gas meters and critical orifices, are allowed for calibrating the dry gas meter in the sampling train. A dry gas meter used as a calibration standard shall be recalibrated at least once annually.

5.2.2 Calibration After Use. After each certification or audit test (four or more test runs conducted on a wood heater at the four burn rates specified in Method 28), check calibration of the metering system by performing three calibration runs at a single, intermediate flow rate as described in Method 5, Section 5.3.2.

Procedures and equipment specified in Method 5, Section 7, for alternative calibration standards are allowed for the post-test dry gas meter calibration check.

5.2.3 Acceptable Variation in Calibration. If the dry gas meter coefficient values obtained before and after a certification test differ by more than 5 percent, the certification test shall either be voided and repeated, or calculations for the certification test shall be performed using whichever meter coefficient value (i.e., before or after) gives the lower value of total sample volume.

5.3 Temperature Gauges. Use the procedure in Method 2, Section 4.3, to calibrate temperature gauges before the first certification or audit test and at least semiannually, thereafter.

5.4 Leak-Check of Metering System Shown in Figure 5G-1. That portion of the sampling train from the pump to the orifice meter shall be leak-checked prior to initial use and after each certification or audit test. Leakage after the pump will result in less volume being recorded than is actually sampled. Use the procedure described in Method 5, Section 5.6.

Similar leak-checks shall be conducted for other types of metering systems (i.e., without orifice meters).

5.5 Barometer. Calibrate against a mercury barometer before the first certification test and at least semiannually, thereafter. If a mercury barometer is used, no calibration is necessary. Follow the manufacturer's instructions for operation.

5.6 Analytical Balance. Perform a multipoint calibration (at least five points spanning the operational range) of the analytical balance before the first certification test and semiannually, thereafter. Before each certification test, audit the balance by weighing at least one calibration weight (class F) that corresponds to 50 to 150 percent of the weight of one filter. If the scale cannot reproduce the value of the calibration weight to within 0.1 mg, conduct the multipoint calibration before use.

6. Calculations

Carry out calculations, retaining at least one extra decimal figure beyond that of the acquired data. Round off figures after the final calculation. Other forms of the equations may be used as long as they give equivalent results.

6.1 Nomenclature.

B_{ws} = Water vapor in the gas stream, proportion by volume (assumed to be 0.04).

c_s = Concentration of particulate matter in stack gas, dry basis, corrected to standard conditions, g/dsm^3 (g/dscf).

E = Particulate emission rate, g/hr.

L_a = Maximum acceptable leakage rate for either a pretest or post-test leak-check, equal to 0.00057 m^3/min (0.02 cfm) or 4 percent of the average sampling rate, whichever is less.

L_p = Leakage rate observed during the post-test leak-check, m^3/min (cfm).

m_a = Mass of residue of acetone blank after evaporation, mg.

m_{aw} = Mass of residue from acetone wash after evaporation, mg.

m_n = Total amount of particulate matter collected, mg.

M_w = Molecular weight of water, 18.0 g/g-mole (18.0 lb/lb-mole).

P_{bar} = Barometric pressure at the sampling site, mm Hg (in. Hg).

PR = Percent of proportional sampling rate.

P_s = Absolute gas pressure in dilution tunnel, mm Hg (in. Hg).

P_{std} = Standard absolute pressure, 760 mm Hg (29.92 in. Hg).

Q_{sd} = Average gas flow rate in dilution tunnel, calculated as in Method 2, Equation 2-10, dsm^3/hr (dscf/hr).

T_m = Absolute average dry gas meter temperature (see Figure 5G-3), °K (°R).

T_{mi} = Absolute average dry gas meter temperature during each 10-minute interval, i, of the test run, °K (°R).

T_s = Absolute average gas temperature in the dilution tunnel (see Figure 5G 3), °K (°R).

T_{si} = Absolute average gas temperature in the dilution tunnel during each 10 minute interval, i, of the test run, °K (°R).

T_{std} = Standard absolute temperature, 293 °K (528 °R).

V_a = Volume of acetone blank, ml.

V_{aw} = Volume of acetone used in wash, ml.

V_m = Volume of gas sample as measured by dry gas meter, dm^3 (dcf).

V_{mi} = Volume of gas sample as measured by dry gas meter during each 10-minute interval, i, of the test run, dm^3 (dcf).

$V_{m(std)}$ = Volume of gas sample measured by the dry gas meter, corrected to standard conditions, dsm^3 (dscf).

V_s = Average gas velocity in dilution tunnel, calculated by Method 2, Equation 2-9, m/sec (ft/sec). The dilution tunnel dry gas molecular weight may be assumed to be 29 g/g mole (lb/lb mole).

V_{si} = Average gas velocity in dilution tunnel during each 10-minute interval, i, of the test run, calculated by Method 2, Equation 2-9, m/sec (ft/sec).

Y = Dry gas meter calibration factor.

ΔH = Average pressure differential across the orifice meter, if used (see Figure 5G-2), mm H_2O (in. H_2O).

Θ = Total sampling time, min.

10 = 10 minutes, length of first sampling period.

13.6 = Specific gravity of mercury.

100 = Conversion to percent.

6.2 Dry Gas Volume. Correct the sample volume measured by the dry gas meter to standard conditions (20 °C, 760 mm Hg or 68° F, 29.92 in. Hg) by using Equation 5G-1. (If no orifice meter is used in sampling train, assume $\Delta H = 0$ or measure static pressure at dry gas meter outlet.)

$$V_{m(std)} = V_m Y \left(\frac{T_{std}}{T_m}\right)\left(\frac{P_{bar} + \frac{\Delta H}{13.6}}{P_{std}}\right) = K_1 V_m Y \left(\frac{P_{bar} + (\Delta H/13.6)}{T_m}\right) \quad \text{Eq. 5G-1}$$

where:

$K_1 = 0.3858$ °K/mm Hg for metric units.
$= 17.64$ °R/in. Hg for English units.

Note: If L_p exceeds L_a, Equation 5G–1 must be modified as follows: Replace V_m in Equation 5G–1 with the expression:

$[V_m - (L_p - L_a)\Theta]$

6.3 Solvent Wash Blank.

$$m_{aw} = \left(\frac{m_a V_{aw}}{V_a} \right) \qquad \text{Eq. 5G–2}$$

6.4 Total Particulate Weight. Determine the total particulate catch, m_n, from the sum of the weights obtained from Containers 1, 2, and 3, less the acetone blank (see Figure 5G–4).

6.5 Particulate Concentration.

$c_s = (0.001\ g/mg)\ (m_n/V_{m(std)})$ Eq. 5G–3

6.6 Particulate Emission Rate.

$E = c_s Q_{sd}$ Eq. 5G–4

Note: Particulate emission rate results produced using the sampling train described in Section 2 and shown in Figure 5G–1 shall be adjusted for reporting purposes by the following methods adjustment factor:

$E_{adj} = 1.82\ (E)^{0.83}$ Eq. 5G–5

6.7 Proportional Rate Variation. Calculate PR for each 10-minute interval, i, of the test run.

$$PR = \left(\frac{\Theta(V_{mi} v_s T_m T_{si})}{10(V_m v_{si} T_s T_{mi})} \right) \times 100 \qquad \text{Eq. 5G–6}$$

Alternate calculation procedures for proportional rate variation may be used if other sample flow rate data (e.g., orifice flow meters or rotameters) are monitored to maintain proportional sampling rates. The proportional rate variations shall be calculated for each 10-minute interval by comparing the stack to nozzle velocity ratio for each 10-minute interval to the average stack to nozzle velocity ratio for the test run. Proportional rate variation may be calculated for intervals shorter than 10 minutes with appropriate revisions to Equation 5G–6.

6.8 Acceptable Results. If no more than 10 percent of the PR values for all the intervals exceed 90 percent $\leq PR \leq 110$ percent, and if no PR value for any interval exceeds 80 percent $\leq PR \leq 120$ percent, the results are acceptable. If the PR values for the test run are judged to be unacceptable, report the test run emission results, but do not include the results in calculating the weighted average emission rate, and repeat the test run.

7. Alternative Sampling and Analysis Procedure

7.1 Method 5H Sampling Train. The sampling and analysis train and procedures described in Method 5H, Sections 2.1, 3.1, 3.2, 5.1, 5.2.3, 5.3, and 5.6 may be used in lieu of similar sections in Method 5G. Operation of the Method 5H sampling train in the dilution tunnel is as described in Section 4.3.5 of this method. Filter temperatures and condenser conditions are as described in Method 5H. No methods adjustment factor as described in Equation 5G–5, Section 6.6, is to be applied to the particulate emission rate data produced by this alternative method.

7.2 Dual Sampling Trains. The tester may operate two sampling trains simultaneously at sample flow rates other than that specified in Section 4.3.5 provided the following specifications are met.

7.2.1 Sampling Train. The sampling train configuration shall be the same as specified in Section 2.1, except the probe, filter, and filter holder need not be the same sizes as specified in the applicable sections. Filter holders of plastic materials such as Nalgene or polycarbonate materials may be used (the Gelman 1119 filter holder has been found suitable for this purpose). With such materials, it is recommended not to use solvents in sample recovery. The filter face velocity shall not exceed 150 mm/sec (30 ft/min) during the test run. The dry gas meter shall be calibrated for the same flow rate range as encountered during the test runs. Two separate, complete sampling trains are required for each test run.

7.2.2 Probe Location. Locate the two probes in the dilution tunnel at the same level (see Section 2.2.3). Two sample ports are necessary. Locate the probe inlets within the 50 mm (2 in.) diameter centroidal area of the dilution tunnel no closer than 25 mm (1 in.) apart.

7.2.3 Sampling Train Operation. Operate the sampling trains as specified in Section 4.3.5, maintaining proportional sampling rates and starting and stopping the two sampling trains simultaneously. The pitot values as described in Section 4.2.2 shall be used to adjust sampling rates in both sampling trains.

7.2.4 Recovery and Analysis of Sample. Recover and analyze the samples from the two sampling trains separately, as specified in Sections 4.4 and 4.5.

For this alternative procedure, the probe and filter holder assembly may be weighed without sample recovery (use no solvents) described above in order to determine the sample weight gains. For this approach, weigh the clean, dry probe and filter holder assembly upstream of the front filter (without filters) to the nearest 0.1 mg to establish the tare weights. The filter holder section between the front and second filter need not be weighed. At the end of the test run, carefully clean the outside of the probe, cap the ends, and identify the sample (label). Remove the filters from the filter holder assemblies as described for containers Nos. 1 and 2 above. Reassemble the filter holder assembly, cap the ends, identify the sample (label), and transfer all the samples to the laboratory weighing area for final weighing. Descriptions of capping and transport of samples are not applicable if sample recovery and analysis occur in the same room.

For this alternative procedure, filters may be weighed directly without a petri dish. If the probe and filter holder assembly are to be weighed to determine the sample weight, rinse the probe with acetone to remove moisture before desiccating prior to the test run. Following the test run, transport the probe and filter holder to the dessicator, and uncap the openings of the probe and the filter holder assembly. Desiccate no more than 36 hours and weigh to a constant weight. Report the results to the nearest 0.1 mg.

7.2.5 Calculations. Calculate an emission rate (Section 6.6) for the sample from each sampling train separately and determine the average emission rate for the two values. The two emission rates shall not differ by more than 7.5 percent from the average emission rate, or 7.5 percent of the weighted average emission rate limit in the applicable standard, whichever is greater. If this specification is not met, the results are unacceptable. Report the results, but do not include the results in calculating the weighted average emission rate. Repeat the test run until acceptable results are achieved, report the average emission rate for the acceptable test run, and use the average in calculating the weighted average emission rate.

8. Bibliography

1. Same as for Method 5, citations 1 through 11, with the addition of the following:

2. Oregon Department of Environmental Quality Standard Method for Measuring the Emissions and Efficiencies of Woodstoves, June 8, 1984. Pursuant to Oregon Administrative Rules Chapter 340, Division 21.

3. American Society for Testing Materials. Proposed Test Methods for Heating Performance and Emissions of Residential Wood-fired Closed Combustion-Chamber Heating Appliances. E–6 Proposal P 180. August 1986.

BILLING CODE 6560-50-M

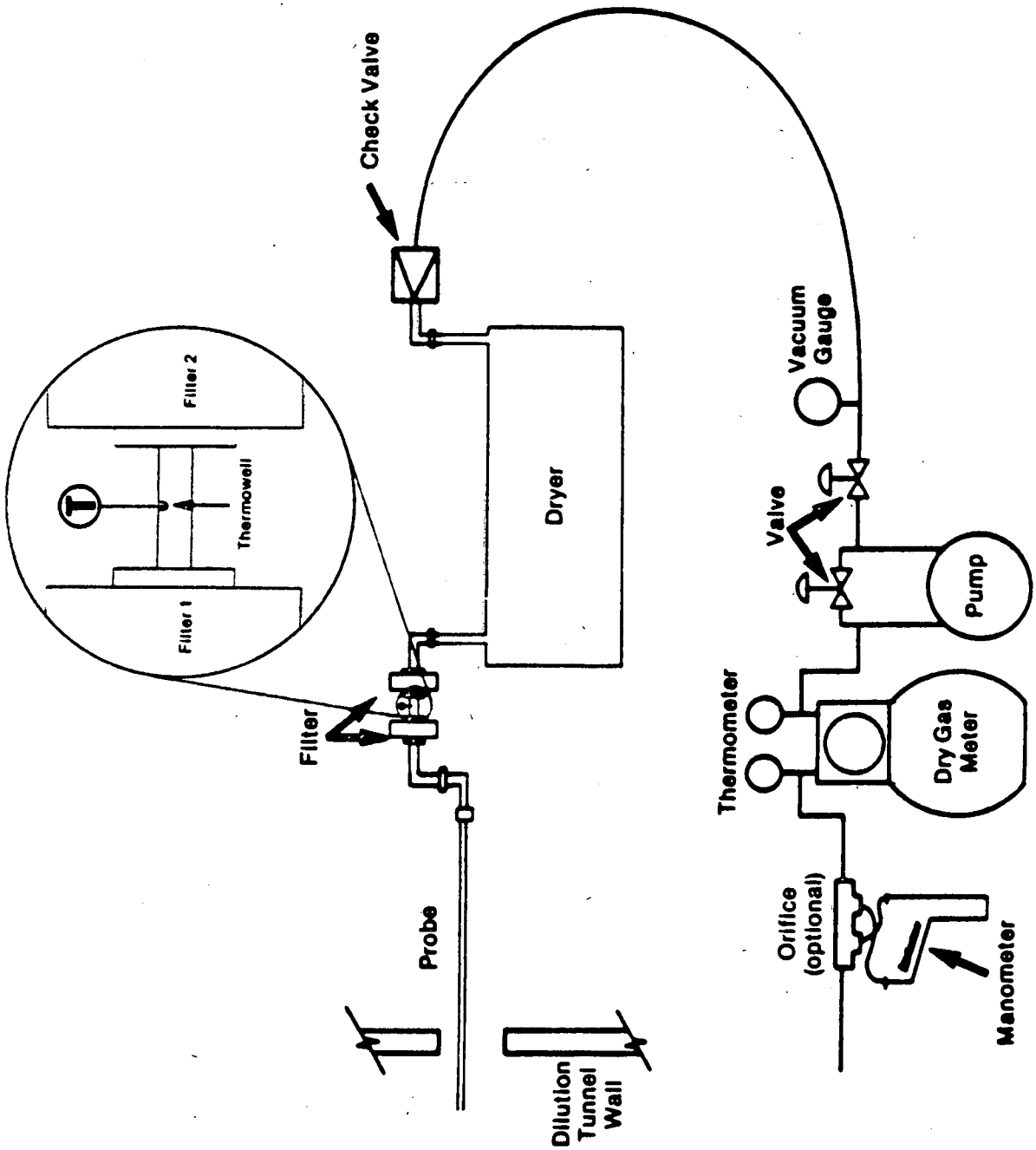

Figure 5G-1. Sampling train.

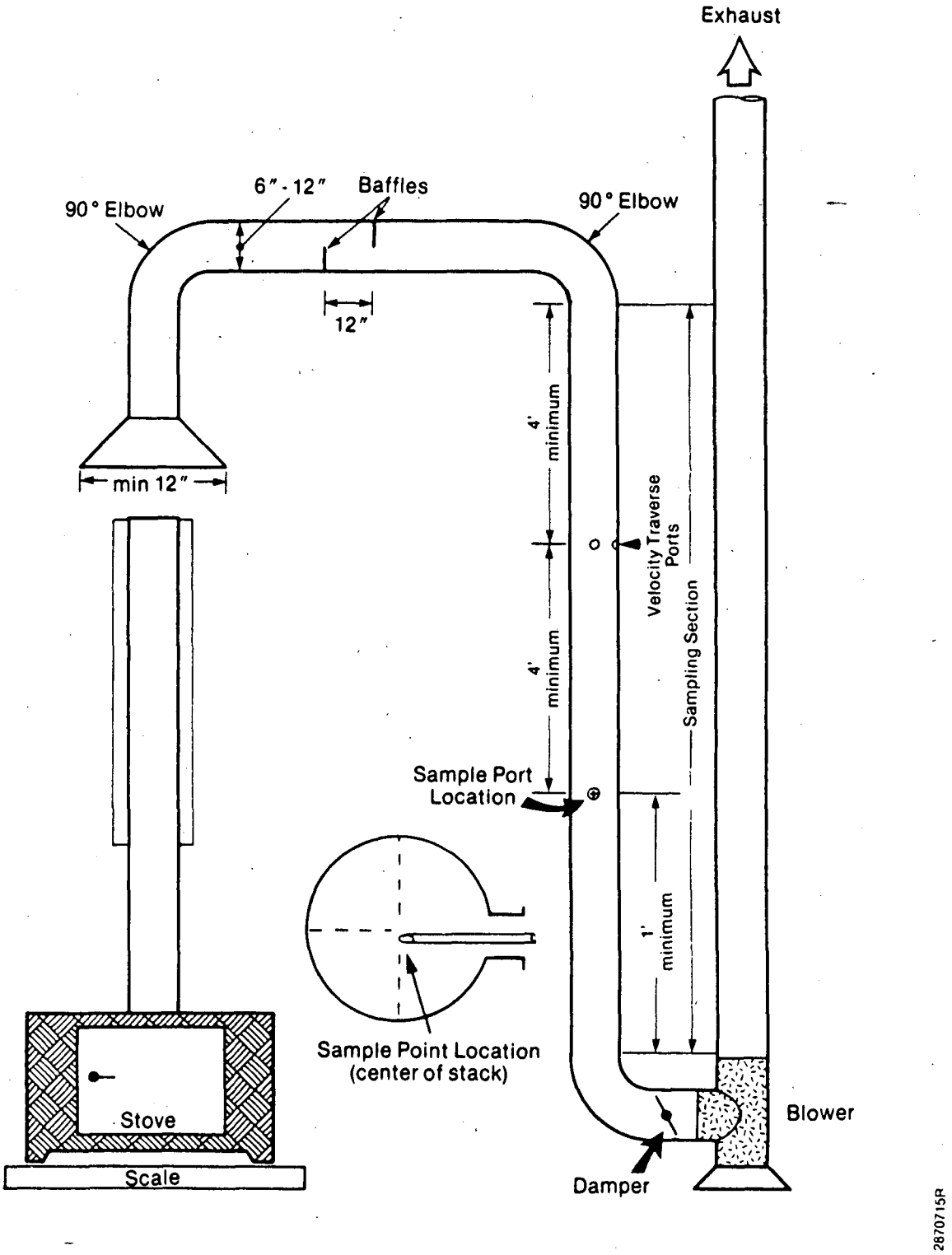

Figure 5G-2. Suggested construction details of the dilution tunnel.

Stove _____
Test Method _____
Operator _____
Date _____
Run No. _____
Start Time _____
Stop Time _____
Sample Box No. _____
Meter Box No. _____
Meter $\Delta H_@$ (optional) _____

Pitot tube coefficient, Cp _____
Room temperature, °C, (°F) _____
Barometric pressure mb (in. Hg) _____
Measured or assumed moisture, % _____
Final leak rate, m^3/min, (cfm) _____
Probe liner material _____
Draft or static pressure, mm H_2O (in. H_2O) _____
Filter Nos. _____

Clock time	Test run time (θ) min.	Vacuum mm Hg (in. Hg)	Tunnel temperature (T_s) °C (°F)	Velocity head (ΔP_s) mm (in.) H_2O	Sample flow rate indicator (orifice meter optional) mm H_2O (in. H_2O)	Gas meter volume m^3 (ft^3)	Gas sample temperature at dry gas meter (In) °C (°F)	Gas sample temperature at dry gas meter (Out) °C (°F)	Filter holder temperature °C (°F)	Temperature of gas leaving dryer or last impinger °C (°F)
Total							Avg.	Avg.		
Average							Avg.			

Figure 5G-3. Particulate field data sheet.

BILLING CODE 6560-50-C

Stove ———
Date ———
Run No. ———
Filter Nos. ———
Liquid lost during transport, ml ———
Acetone blank volume, ml ———
Acetone wash volume, ml ———
Acetone blank concentration, mg/mg ———
Acetone wash blank, mg ———

Container No.	Weight of particulate collected, mg		
	Final weight	Tare weight	Weight gain
1.			
2.			
3.			
Total			
Less acetone blank			
Weight of particulate matter			

STACK MOISTURE MEASUREMENT DATA (OPTIONAL)

	Volume of liquid water collected	
	Impinger volume, ml	Silica gel weight, g
Final		
Initial		
Liquid collected		
Total volume collected		g[1] ml

[1] Convert weight of water to volume by dividing total weight increase by density of water (1 g/ml).

$$\frac{\text{Increase, g}}{(1\ \text{g/ml})} = \text{Volume water, ml}$$

Figure 5G–4. Analysis data sheet.

Method 5H—Determination of Particulate Emissions From Wood Heaters From a Stack Location

Applicability and Principle

1.1 Applicability. This method is applicable for the determination of particulate matter and condensible emissions from wood heaters.

1.2 Principle. Particulate matter is withdrawn proportionally from the wood heater exhaust and is collected on two glass fiber filters separated by impingers immersed in an ice bath. The first filter is maintained at a temperature of no greater than 120 °C (248 °F). The second filter and the impinger system are cooled such that the exiting temperature of the gas is no greater than 20 °C (68 °F). The particulate mass collected in the probe, on the filters, and in the impingers is determined gravimetrically after removal of uncombined water.

2. Apparatus

2.1 Sampling Train. The sampling train configuration is shown in Figure 5H–1. APTD–0576 is suggested for operating and maintenance procedures. The train consists of the following components:

2.1.1 Probe Nozzle. (Optional) Same as Method 5, Section 2.1.1. A straight sampling probe without a nozzle is an acceptable alternative.

2.1.2 Probe Liner. Same as Method 5, Section 2.1.2, except that the maximum length of the sample probe shall be 0.6 m (2 ft) and probe heating is optional.

2.1.3 Differential Pressure Gauge. Same as Method 5, Section 2.1.4.

2.1.4 Filter Holders. Two each of borosilicate glass, with a glass frit or stainless steel filter support and a silicone rubber, Teflon, or Viton gasket. The holder design shall provide a positive seal against leakage from the outside or around the filter. The front filter holder shall be attached immediately at the outlet of the probe and prior to the first impinger. The second filter holder shall be attached on the outlet of the third impinger and prior to the inlet of the fourth (silica gel) impinger.

Note: Mention of trade names or specific product does not constitute endorsement by the Environmental Protection Agency.

2.1.5 Filter Heating System. Same as Method 5, Section 2.1.6.

2.1.6 Condenser. Same as Method 5, Section 2.1.7, used to collect condensible materials and determine the stack gas moisture content.

2.1.7 Metering System. Same as Method 5, Section 2.1.8.

2.1.8 Barometer. Mercury, aneroid, or other barometer capable of measuring atmospheric pressure to within 2.5 mm Hg (0.1 in. Hg).

2.2 Stack Flow Rate Measurement System. A schematic of an example test system is shown in Figure 5H–2. The flow rate measurement system consists of the following components:

2.2.1 Sample Probe. A glass or stainless steel sampling probe.

2.2.2 Gas Conditioning System. A high density filter to remove particulate matter and a condenser capable of lowering the dew point of the gas to less than 5 °C (40 °F). Desiccant, such as Drierite, may be used to dry the sample gas. Do not use silica gel.

2.2.3 Pump. An inert (i.e., Teflon or stainless steel heads) sampling pump capable of delivering more than the total amount of sample required in the manufacturer's instructions for the individual instruments. A means of controlling the analyzer flow rate and a device for determining proper sample flow rate (e.g., precision rotameter, pressure gauge downstream of all flow controls) shall be provided at the analyzer. The requirements for measuring and controlling the analyzer flow rate are not applicable if data are presented that demonstrate the analyzer is insensitive to flow variations over the range encountered during the test.

2.2.4 CO Analyzer. Any analyzer capable of providing a measure of CO in the range of 0 to 10 percent by volume at least once every 10 minutes.

2.2.5 CO_2 Analyzer. Any analyzer capable of providing a measure of CO_2 in the range of 0 to 25 percent by volume at least once every 10 minutes.

Note: Analyzers with ranges less than those specified above may be used provided actual concentrations do not exceed the range of the analyzer.

2.2.6 Manifold. A sampling tube capable of delivering the sample gas to two analyzers and handling an excess of the total amount used by the analyzers. The excess gas is exhausted through a separate port.

2.2.7 Recorders (optional). To provide a permanent record of the analyzer outputs.

2.3 Proportional Gas Flow Rate System. To monitor stack flow rate changes and provide a measurement that can be used to adjust and maintain particulate sampling flow rates proportional to the stack flow rate. A schematic of the proportional flow rate system is shown in Figure 5H–2 and consists of the following components:

2.3.1 Tracer Gas Injection System. To inject a known concentration of SO_2 into the flue. The tracer gas injection system consists of a cylinder of SO_2, a gas cylinder regulator, a stainless steel needle valve or flow controller, a nonreactive (stainless steel and glass) rotameter, and an injection loop to disperse the SO_2 evenly in the flue.

2.3.2 Sample Probe. A glass or stainless steel sampling probe.

2.3.3 Gas Conditioning System. A combustor as described in Method 16A, Sections 2.1.5 and 2.1.6, followed by a high density filter to remove particulate matter, and a condenser capable of lowering the dew point of the gas to less than 5 °C (40 °F). Desiccant, such as Drierite, may be used to dry the sample gas. Do not use silica gel.

2.3.4 Pump. As described in Section 2.2.3.

2.3.5 SO_2 Analyzer. Any analyzer capable of providing a measure of the SO_2 concentration in the range of 0 to 1,000 ppm by volume (or other range necessary to measure the SO_2 concentration) at least once every 10 minutes.

2.3.6 Recorder (optional). To provide a permanent record of the analyzer outputs.

Note: Other tracer gas systems, including helium gas systems, are allowed for determining instantaneous proportional sampling rates.

2.4 Sample Recovery. Probe liner and probe nozzle brushes, wash bottles, sample storage containers, petri dishes, graduated cylinder or balance, plastic storage containers, funnel and rubber policeman, as described in Method 5, Sections 2.2.1 through 2.2.8, respectively, are needed.

2.5 Analysis. Weighing dishes, desiccator, analytical balance, beakers (250 ml or less), hygrometer or psychrometer, and temperature gauge as described in Method 5, Sections 2.3.1 through 2.3.7, respectively, are needed. In addition, a separatory funnel, glass or Teflon, 500 ml or greater, is needed.

3. Reagents

3.1 Sampling. The reagents used in sampling are as follows:

3.1.1 Filters. Glass fiber filters, without organic binder, exhibiting at least 99.95 percent efficiency (<0.05 percent penetration) on 0.3-micron dioctyl phthalate smoke particles. Gelman A/E 61631 filters have been found acceptable for this purpose.

3.1.2 Silica Gel. Same as Method 5, Section 3.1.2.

3.1.3 Water. Deionized distilled to conform to ASTM Specification D1193-77, Type 3 (incorporated by reference—see § 60.17). Run blanks prior to field use to eliminate a high blank on test samples.

3.1.4 Crushed Ice.

3.1.5 Stopcock Grease. Same as Method 5, Section 3.1.5.

3.2 Sample Recovery. Same as Method 5, Section 3.2.

3.3 Cylinder Gases. For the purposes of this procedure, span value is defined as the upper limit of the range specified for each analyzer as described in Section 2.2 or 2.3. If an analyzer with a range different from that specified in this method is used, the span value shall be equal to the upper limit of the range for the analyzer used (see Note in Section 2.2.5).

3.3.1 Calibration Gases. The calibration gases for the CO_2, CO and SO_2 analyzers shall be CO_2, CO, or SO_2, as appropriate, in N_2. CO_2 and CO calibration gases may be combined in a single cylinder.

There are two alternatives for checking the concentrations of the calibration gases. (a) The first is to use calibration gases that are documented traceable to National Bureau of Standards Reference Materials. Use *Tracebility Protocol for Establishing True Concentrations of Gases Used for Calibrations and Audits of Continuous Source Emission Monitors* (Protocol Number 1) that is available from the Environmental Monitoring and Support Laboratory, Quality Assurance Branch, Mail Drop 77, Environmental Protection Agency, Research Triangle Park, North Carolina 27711. Obtain a certification from the gas manufacturer that the protocol was followed. These calibration gases are not to be analyzed with the test methods. (b) The second alternative is to use calibration gases not prepared according to the protocol. If this alternative is chosen, within 6 months prior to the certification test, analyze each of the CO_2 and CO calibration gas mixtures in triplicate using Method 3, and within 1 month prior to the certification test, analyze SO_2 calibration gas mixtures using Method 6. For the low-level, mid-level, or high-level gas mixtures, each of the individual SO_2 analytical results must be within 10 percent (or 10 ppm, whichever is greater) of the triplicate set average; CO_2 and CO test results must be within 0.5 percent CO_2 and CO; otherwise, discard the entire set and repeat the triplicate analyses. If the average of the triplicate test method results is within 5 percent for SO_2 gas (or 0.5 percent CO_2 and CO for the CO_2 and CO gases) of the calibration gas manufacturer's tag values, use the tag value; otherwise, conduct at least three additional test method analyses until the results of six individual SO_2 runs (the three original plus three additional) agree within 10 percent (or 10 ppm, whichever is greater) of the average (CO_2 and CO test results must be within 0.5 percent). Then use this average for the cylinder value. Four calibration gas levels are required as specified below:

3.3.1.1 High-level Gas. A gas concentration that is equivalent to 80 to 90 percent of the span value.

3.3.1.2 Mid-level Gas. A gas concentration that is equivalent to 45 to 55 percent of the span value.

3.3.1.3 Low-level Gas. A gas concentration that is equivalent to 20 to 30 percent of the span value.

3.3.1.4 Zero Gas. A gas concentration of less than 0.25 percent of the span value. Purified air may be used as zero gas for the CO_2, CO, and SO_2 analyzers.

3.3.2 SO_2 Injection Gas. A known concentration of SO_2 in N_2. The concentration must be at least 2 percent SO_2 with a maximum of 100 percent SO_2. The cylinder concentration shall be certified by the manufacturer to be within 2 percent of the specified concentration.

3.4 Analysis. Three reagents are required for the analysis:

3.4.1 Acetone. Same as 3.2.

3.4.2 Dichloromethane (Methylene Chloride). Reagent grade, <0.001 percent residue in glass bottles.

3.4.3 Desiccant. Anhydrous calcium sulfate, calcium chloride, or silica gel, indicating type.

4. Gas Measurement System Performance Specifications.

4.1 Response Time. The amount of time required for the measurement system to display 95 percent of a step change in gas concentration. The response time for each analyzer and gas conditioning system shall be no more than 2 minutes.

4.2 Zero Drift. The zero drift value for each analyzer shall be less than 2.5 percent of the span value over the period of the test run.

4.3 Calibration Drift. The calibration drift value measured with the mid-level calibration gas for each analyzer shall be less than 2.5 percent of the span value over the period of the test run.

4.4 Resolution. The resolution of the output for each analyzer shall be 0.5 percent of span value or less.

4.5 Calibration Error. The linear calibration curve produced using the zero and mid-level calibration gases shall predict the actual response to the low-level and high-level calibration gases within 2 percent of the span value.

5. Procedure

5.1 Pretest Preparation.

5.1.1 Filter and Desiccant. Same as Method 5, Section 4.1.1.

5.1.2 Sampling Probe and Nozzle. The sampling location for the particulate sampling probe shall be 2.45±0.15 m (8±0.5 ft) above the platform upon which the wood heater is placed (i.e., the top of the scale).

Select a nozzle, if used, sized for the range of velocity heads, such that it is not necessary to change the nozzle size in order to maintain proportional sampling rates. During the run, do not change the nozzle size.

Select a suitable probe liner and probe length to effect minimum blockage.

5.1.3 Preparation of Particulate Sampling Train. During preparation and assembly of the particulate sampling train, keep all openings where contamination can occur covered until just prior to assembly or until sampling is about to begin.

Place 100 ml of water in each of the first two impingers, leave the third impinger empty, and transfer approximately 200 to 300 g of preweighed silica gel from its container to the fourth impinger. More silica gel may be used, but care should be taken to ensure that it is not entrained and carried out from the impinger during sampling. Place the container in a clean place for later use in the sample recovery. Alternatively, the weight of the silica gel plus impinger may be determined to the nearest 0.5 g and recorded.

Using a tweezer or clean surgical gloves, place one labeled (identified) and weighed filter in each of the filter holders. Be sure that each of the filters is properly centered and the gasket properly placed so as to prevent the sample gas stream from circumventing the filter. Check the filters for tears after assembly is completed.

When glass liners are used, install the selected nozzle using a Viton A O-ring. Other connecting systems using either 316 stainless steel or Teflon ferrules may be used. Mark the probe with heat resistant tape or by some other method to denote the proper distance into the stack or duct.

Set up the train as in Figure 5H 1, using (if necessary) a very light coat of silicone grease on all ground glass joints, greasing only the outer portion (see APTD-0576) to avoid possibility of contamination by the silicone grease.

Place crushed ice around the impingers.

5.1.4 Leak-Check Procedures.

5.1.4.1 Pretest Leak-Check. A pretest leak-check is recommended, but not required. If the tester opts to conduct the pretest leak-check, conduct the leak-check as described in Method 5, Section 4.1.4.1, except that a vacuum of 130 mm Hg (5 in. Hg) may be used instead of 380 mm Hg (15 in. Hg).

5.1.4.2 Leak-Checks During Sample Run. If, during the sampling run, a component (e.g., filter assembly or impinger) change becomes necessary, conduct a leak-check as described in Method 5, Section 4.1.4.2.

5.1.4.3 Post-Test Leak-Check. A leak-check is mandatory at the conclusion of each sampling run. The leak-check shall be done in accordance with the procedures described in Method 5, Section 4.1.4.3, except that a vacuum of 130 mm Hg (5 in. Hg) or the greatest vacuum measured during the test run, whichever is greater, may be used instead of 380 mm Hg (15 in. Hg).

5.1.5 Tracer Gas Procedure. A schematic of the tracer gas injection and sampling systems is shown in Figure 5H-2.

5.1.5.1 SO_2 Injection Probe. Install the SO_2 injection probe and dispersion loop in the stack at a location 2.8±0.15 m (9.5±0.5 ft) above the sampling platform.

5.1.5.2 SO_2 Sampling Probe. Install the SO_2 sampling probe at the centroid of the stack at a location 4±0.15 m (13.5±0.5 ft) above the sampling platform.

5.1.6 Flow Rate Measurement System. A schematic of the flow rate measurement system is shown in Figure 5H-2. Locate the flow rate measurement sampling probe at the centroid of the stack at a location 2.3±0.3 m (7.5±1 ft) above the sampling platform.

5.2 Test Run Procedures. The start of the test run is defined as in Method 28, Section 6.4.1.

5.2.1 Tracer Gas Procedure. Within 1 minute after closing the wood heater door at the start of the test run, meter a known

concentration of SO_2 tracer gas at a constant flow rate into the wood heater stack. Monitor the SO_2 concentration in the stack, and record the SO_2 concentrations at 10-minute intervals or more often at the option of the tester. Adjust the particulate sampling flow rate proportionally to the SO_2 concentration changes using Equation 5H-6 (e.g., the SO_2 concentration at the first 10-minute reading is measured to be 100 ppm; the next 10 minute SO_2 concentration is measured to be 75 ppm: the particulate sample flow rate is adjusted from the initial 0.15 cfm to 0.20 cfm). A check for proportional rate variation shall be made at the completion of the test run using Equation 5H-10.

5.2.2 Volumetric Flow Rate Procedure. Apply stoichiometric relationships to the wood combustion process in determining the exhaust gas flow rate as follows:

5.2.2.1 Test Fuel Charge Weight. Record the test fuel charge weight in kilograms (wet) as specified in Method 28, Section 6.4.2. The wood is assumed to have the following weight percent composition: 51 percent carbon, 7.3 percent hydrogen, 41 percent oxygen. Record the wood moisture for each wood charge as described in Method 28, Section 6.2.5. The ash is assumed to have negligible effect on associated C, H, O concentrations after the test burn.

5.2.2.2 Measured Values. Record the CO and CO_2 concentrations in the stack on a dry basis every 10 minutes during the test run or more often at the option of the tester. Average these values for the test run. Use as a mole fraction (e.g., 10 percent CO_2 is recorded as 0.10) in the calculations to express total flow Equation 5H-7.

5.2.3 Particulate Train Operation. For each run, record the data required on a data sheet such as the one shown in Figure 5H-3. Be sure to record the initial dry gas meter reading. Record the dry gas meter readings at the beginning and end of each sampling time increment, when changes in flow rates are made, before and after each leak-check, and when sampling is halted. Take other readings as indicated on Figure 5H-3 at least once each 10 minutes during the test run.

Remove the nozzle cap, verify that the filter and probe heating systems are up to temperature, and that the probe is properly positioned. Position the nozzle, if used, facing into gas stream, or the probe tip in the 50 mm (2 in.) centroidal area of the stack.

Be careful not to bump the probe tip into the stack wall when removing or inserting the probe through the porthole; this minimizes the chance of extracting deposited material.

When the probe is in position, block off the openings around the probe and porthole to prevent unrepresentative dilution of the gas stream.

Begin sampling at the start of the test run as defined in Method 28, Section 6.4.1, start the sample pump, and adjust the sample flow rate to between 0.003 and 0.015 m^3/min (0.1 and 0.5 cfm). Adjust the sample flow rate proportionally to the stack flow during the test run (Section 5.2.1), and maintain a proportional sampling rate (within 10 percent of the desired value) and a filter holder temperature no greater than 120 °C (248 °F).

During the test run, make periodic adjustments to keep the temperature around the filter holder at the proper level. Add more ice to the impinger box and, if necessary, salt to maintain a temperature of less than 20 °C (68 °F) at the condenser/silica gel outlet.

If the pressure drop across the filter becomes too high, making sampling difficult to maintain, either filter may be replaced during a sample run. It is recommended that another complete filter assembly be used rather than attempting to change the filter itself. Before a new filter assembly is installed, conduct a leak-check (see Section 5.1.4.2). The total particulate weight shall include the summation of all filter assembly catches. The total time for changing sample train components shall not exceed 10 minutes. No more than one component change is allowed for any test run.

At the end of the test run, turn off the coarse adjust valve, remove the probe and nozzle from the stack, turn off the pump, record the final dry gas meter reading, and conduct a post-test leak-check, as outlined in Section 5.1.4.3.

5.3 Sample Recovery. Begin recovery of the probe and filter sample as described in Method 5, Section 4.2, except that an acetone blank volume of about 50 ml may be used. Treat the samples as follows:

Container No. 1. Carefully remove the filter from the front filter holder and place it in its identified petri dish container. Use a pair of tweezers and/or clean disposable surgical gloves to handle the filter. If it is necessary to fold the filter, do so such that the particulate cake is inside the fold. Carefully transfer to the petri dish any particulate matter and/or filter fibers which adhere to the filter holder gasket, by using a dry Nylon bristle brush and/or a sharp-edged blade. Seal and label the container.

Container No. 2. Remove the filter from the back filter holder using the same procedures as described above.

Container No. 3. Same as Method 5, Section 4.2 for Container No. 2. except that descriptions of capping and sample transport are not applicable if sample recovery and analysis occur in the same room.

Container No. 4. Treat the impingers as follows: Measure the liquid which is in the first three impingers to within 1 ml by using a graduated cylinder or by weighing it to within 0.5 g by using a balance (if one is available). Record the volume or weight of liquid present. This information is required to calculate the moisture content of the effluent gas.

Transfer the water from the first, second and third impingers to a glass container. Tighten the lid on the sample container so that water will not leak out. Rinse impingers and graduated cylinder, if used, with acetone three times or more. Avoid direct contact between the acetone and any stopcock grease or collection of any stopcock grease in the rinse solutions. Add these rinse solutions to sample Container No. 3.

Whenever possible, containers should be transferred in such a way that they remain upright at all times. Descriptions of capping and transport of samples are not applicable if sample recovery and analysis occur in the same room.

Container No. 5. Transfer the silica gel from the fourth impinger to its original container and seal. A funnel may make it easier to pour the silica gel without spilling. A rubber policeman may be used as an aid in removing the silica gel from the impinger. It is not necessary to remove the small amount of dust particles that may adhere to the impinger wall and are difficult to remove. Since the gain in weight is to be used for moisture calculations, do not use any water or other liquids to transfer the silica gel. If a balance is available, follow the procedure for Container No. 5 in Section 5.4.

5.4 Analysis. Record the data required on a sheet such as the one shown in Figure 5H-4. Handle each sample container as follows:

Containers No. 1 and 2. Leave the contents in the shipping container or transfer both of the filters and any loose particulate from the sample container to a tared glass weighing dish. Desiccate for no more than 36 hours. Weigh to a constant weight and report the results to the nearest 0.1 mg. For purposes of this Section, 5.6, the term "constant weight" means a difference of no more than 0.5 mg or 1 percent of total weight less tare weight, whichever is greater, between two consecutive weighings, with no less than 2 hours between weighings.

Container No. 3. Note the level of liquid in the container and confirm on the analysis sheet whether leakage occurred during transport. If a noticeable amount of leakage has occurred, either void the sample or use methods, subject to the approval of the Administrator, to correct the final results. Determination of sample leakage is not applicable if sample recovery and analysis occur in the same room. Measure the liquid in this container either volumetrically to within 1 ml or gravimetrically to within 0.5 g. Transfer the contents to a tared 250-ml or smaller beaker, and evaporate to dryness at ambient temperature and pressure. Desiccate and weigh to a constant weight. Report the results to the nearest 0.1 mg.

Container No. 4. Note the level of liquid in the container and confirm on the analysis sheet whether leakage occurred during transport. If a noticeable amount of leakage has occurred, either void the sample or use methods, subject to the approval of the Administrator, to correct the final results. Determination of sample leakage is not applicable if sample recovery and analysis occur in the same room. Measure the liquid in this container either volumetrically to within 1 ml or gravimetrically to within 0.5 g. Transfer the contents to a 500 ml or larger separatory funnel. Rinse the container with water, and add to the separatory funnel. Add 25 ml of dichloromethane to the separatory funnel, stopper and vigorously shake 1 minute, let separate and transfer the dichloromethane (lower layer) into a tared beaker or evaporating dish. Repeat twice more. It is necessary to rinse the Container No. 4 with dichloromethane. This rinse is added to the impinger extract container. Transfer the remaining water from the separatory funnel to a tared beaker or evaporating dish and evaporate to dryness at 220 °F (105 °C). Desiccate and weigh to a constant weight. Evaporate the combined impinger water extracts at ambient temperature and pressure. Desiccate and

weigh to a constant weight. Report both results to the nearest 0.1 mg.

Container No. 5. Weigh the spent silica gel (or silica gel plus impinger) to the nearest 0.5 g using a balance.

"Acetone Blank" Container. Measure acetone in this container either volumetrically or gravimetrically. Transfer the acetone to a tared 250-ml or smaller beaker, and evaporate to dryness at ambient temperature and pressure. Desiccate and weigh to a constant weight. Report the results to the nearest 0.1 mg.

"Dichloromethane" Container. Measure 75 ml of dichloromethane in this container and treat it the same as the "acetone blank."

"Water Blank" Container. Measure 200 ml water into this container either volumetrically or gravemetrically. Transfer the water to a tared 250-ml beaker and evaporate to dryness at 105 °C (221 °F). Desiccate and weigh to a constant weight.

6. Calibration

Maintain a laboratory record of all calibrations.

6.1 Volume Metering System.

6.1.1 Initial and Periodic Calibration. Before the first certification or audit test and at least semiannually, thereafter, calibrate the volume metering system as described in Method 5G, Section 5.2.1.

6.1.2 Calibration After Use. Same as Method 5G, Section 5.2.2.

6.1.3 Acceptable Variation in Calibration. Same as Method 5G, Section 5.2.3.

6.2 Probe Heater Calibration. (Optional) The probe heating system shall be calibrated before the first certification or audit test. Use the procedure described in Method 5, Section 5.4.

6.3 Temperature Gauges. Use the procedure in Method 2, Section 4.3, to calibrate in-stack temperature gauges before the first certification or audit test and semiannually, thereafter.

6.4 Leak-Check of Metering System Shown in Figure 5H-1. That portion of the sampling train from the pump to the orifice meter shall be leak-checked after each certification or audit test. Use the procedure described in Method 5, Section 5.6.

6.5 Barometer. Calibrate against a mercury barometer before the first certification test and semiannually, thereafter. If a mercury barometer is used, no calibration is necessary. Follow the manufacturer's instructions for operation.

6.6 SO_2 Injection Rotameter. Calibrate the SO_2 injection rotameter system with a soap film flowmeter or similar direct volume measuring device with an accuracy of ± 2 percent. Operate the rotameter at a single reading for at least three calibration runs for 10 minutes each. When three consecutive calibration flow rates agree within 5 percent, average the three flow rates, mark the rotameter at the calibrated setting, and use the calibration flow rate as the SO_2 injection flow rate during the test run. Repeat the rotameter calibration before the first certification test and semiannually, thereafter.

6.7 Analyzer Calibration Error Check. Conduct the analyzer calibration error check prior to each certification test.

6.7.1 Calibration Gas Injection. After the flow rate measurement system and the tracer gas measurement system have been prepared for use (Sections 5.1.5.2 and 5.1.6), introduce zero gases and then the mid-level calibration gases for each analyzer. Set the analyzers' output responses to the appropriate levels. Then introduce the low-level and high-level calibration gases, one at a time, for each analyzer. Record the analyzer responses.

6.7.2 Acceptability Values. If the linear curve for any analyzer determined from the zero and mid-level calibration gases' responses does not predict the actual responses of the low-level and high-level gases within 2 percent of the span value, the calibration of that analyzer shall be considered invalid. Take corrective measures on the measurement system before repeating the calibration error check and proceeding with the test runs.

6.8 Measurement System Response Time. Introduce zero gas at the calibration gas valve into the flow rate measurement system and the tracer gas measurement system until all readings are stable. Then, quickly switch to introduce the mid-level calibration gas at the calibration value until a stable value is obtained. A stable value is equivalent to a change of less than 1 percent of span value for 30 seconds. Record the response time. Repeat the procedure three times. Conduct the response time check for each analyzer separately before its initial use and at least semiannually thereafter.

6.9 Measurement System Drift Checks. Immediately prior to the start of each test run (within 1 hour of the test run start), introduce zero and mid-level calibration gases, one at a time, to each analyzer through the calibration valve. Adjust the analyzers to respond appropriately. Immediately following each test run (within 1 hour of the end of the test run), or if adjustments to the analyzers or measurement systems are required during the test run, reintroduce the zero- and mid-level calibration gases and record the responses, as described above. Make no adjustments to the analyzers or the measurement system until after the drift checks are made.

If the difference between the analyzer responses and the known calibration gas values exceed the specified limits (Sections 4.2 and 4.3), the test run will be considered invalid and shall be repeated following corrections to the measurement system. Alternatively, recalibrate the measurement system and recalculate the measurement data. Report the test run results using both the initial and final calibration data.

6.10 Analytical Balance. Perform a multipoint calibration (at least five points spanning the operational range) of the analytical balance before the first certification test and semiannually, thereafter. Before each certification test, audit the balance by weighing at least one calibration weight (class F) that corresponds to 50 to 150 percent of the weight of one filter. If the scale cannot reproduce the value of the calibration weight to within 0.1 mg, conduct the multipoint calibration before use.

7. Calculations

Carry out calculations, retaining at least one extra decimal figure beyond that of the acquired data. Round off figures after the final calculation. Other forms of the equations may be used as long as they give equivalent results.

7.1 Nomenclature.

a = Sample flow rate adjustment factor.

BR = dry wood burn rate, kg/hr (lb/hr), from Method 28, Section 8.3.

B_{ws} = Water vapor in the gas stream, proportion by volume.

c_s = Concentration of particulate matter in stack gas, dry basis, corrected to standard conditions, g/dsm ^{3} (g/dscf).

E = Particulate emission rate, g/hr.

ΔH = Average pressure differential across the orifice meter (see Figure 5H-1), mm H_2O (in. H_2O).

L_a = Maximum acceptable leakage rate for either a post-test leak check or for a leak-check following a component change; equal to 0.00057 m ^{3}/min (0.02 cfm) or 4 percent of the average sampling rate, whichever is less.

L_i = Individual leakage rate observed during the leak-check conducted before a component change, m ^{3}/min (cfm).

L_p = Leakage rate observed during the post-test leak-check, m ^{3}/min (cfm).

m_n = Total amount of particulate matter collected, mg.

m_a = Mass of residue of solvent after evaporation, mg.

N_C = Gram atoms of carbon/gram of dry fuel (lb/lb), equal to 0.0425.

N_T = Total dry moles of exhaust gas/Kg of dry wood burned, g-moles/kg (lb-moles/lb).

PR = Percent of proportional sampling rate.

P_{bar} = Barometric pressure at the sampling site, mm Hg (in. Hg).

P_{std} = Standard absolute pressure, 760 mm Hg (29.92 in. Hg).

Q_{sd} = Total gas flow rate, dsm ^{3}/hr (dscf/hr).

Q_T = Flow of tracer gas, liters/min.

S_i = Concentration measured at the SO_2 analyzer for the "i^{th}" 10 minute interval, ppm.

S_1 = Concentration measured at the SO_2 analyzer for the first 10-minute interval, ppm.

T_1 = Absolute average stack gas temperature for the first 10-minute interval, ° K (° R).

T_i = Absolute average stack gas temperature at the "i^{th}" 10-minute interval, ° K (° R).

T_m = Absolute average dry gas meter temperature (see Figure 5H-3), ° K (° R).

T_{std} = Standard absolute temperature, 293 ° K (528 ° R).

V_a = volume of solvent blank, ml.

V_{aw} = Volume of solvent used in wash, ml.

V_{lc} = Total volume of liquid collected in impingers and silica gel (see Figure 5H-4), ml.

V_m = Volume of gas sample as measured by dry gas meter, dm ^{3} (dcf).

$V_{m(std)}$ = Volume of gas sample measured by the dry gas meter, corrected to standard conditions, dsm ^{3} (dscf).

$V_{m1(std)}$ = Volume of gas sample measured by the dry gas meter during the first 10-minute interval, corrected to standard conditions, dsm ^{3} (dscf).

$V_{mi(std)}$ = Volume of gas sample measured by the dry gas meter during the "i^{th}" 10-minute interval, dsm ^{3} (dscf).

$V_{w(std)}$ = Volume of water vapor in the gas sample, corrected to standard conditions, sm^3 (scf).
W_a = Weight of residue in solvent wash, mg.
Y = Dry gas meter calibration factor.
Y_{CO} = Measured mole fraction of CO (dry), average from Section 5.2.2.2, g/g-mole (lb/lb-mole).
Y_{CO2} = Measured mole fraction of CO_2 (dry), average from Section 5.2.2.2, g/g-mole (lb/lb-mole).
Y_{HC} = Assumed mole fraction of HC (dry), g/g-mole (lb/lb-mole);
= 0.0088 for catalytic wood heaters;
= 0.0132 for non-catalytic wood heaters;
= 0.0080 for pellet-fired wood heaters.
10 = Length of first sampling period, minutes.
13.6 = Specific gravity of mercury.
100 = Conversion to percent.
θ = Total sampling time, min.
θ_1 = Sampling time interval, from the beginning of a run until the first component change, min.

7.2 Average dry gas meter temperature and average orifice pressure drop. See data sheet (Figure 5H-3).

7.3 Dry Gas Volume. Correct the sample volume measured by the dry gas meter to standard conditions (20 °C, 760 mm Hg or 68 °F, 29.92 in. Hg) by using Equation 5H-1.

$$V_{m(std)} = V_m Y \frac{T_{std}}{T_m}\left(\frac{P_{bar} + \frac{\Delta H}{13.6}}{P_{std}}\right) = K_1 V_m Y\left(\frac{P_{bar} + (\Delta H/13.6)}{T_m}\right) \quad \text{Eq. 5H-1}$$

where:
K_1 = 0.3858 °K/m. Hg for metric units.
= 17.64 °R/in. Hg for English units.

Note: Equation 5H-1 can be used as written unless the leakage rate observed during any of the mandatory leak-checks (i.e., the post-test leak-check or leak-check conducted before a component change) exceeds L_a.

If L_p exceeds L_a, Equation 5H-1 must be modified as follows:

(a) Case I. No component changes made during sampling run. In this case, replace V_m in Equation 5H-1 with the expression:
$[V_m - (L_p - L_a)\theta]$

(b) Case II. One component change made during the sampling run. In this case, replace V_m in Equation 5H-1 by the expression:
$V_m - (L_1 - L_a)\theta_1$
and substitute only for those leakage rates (L_1 or L_p) which exceed L_a.

7.4 Volume of Water Vapor.

$V_{w(std)} = K_2 V_{lc}$ Eq. 5H-2

where:
K_2 = 0.001333 m^3/ml for metric units
= 0.04707 ft^3/ml for English units.

7.5 Moisture Content.

$$B_{ws} = \left(\frac{V_{w(std)}}{V_{m(std)} + V_{w(std)}}\right) \quad \text{Eq. 5H-3}$$

7.6 Solvent Wash Blank.

$$W_a = \left(\frac{m_a V_{aw}}{V_a}\right) \quad \text{Eq. 5H-4}$$

7.7 Total Particulate Weight. Determine the total particulate catch from the sum of the weights obtained from containers 1, 2, 3, and 4 less the appropriate solvent blanks (see Figure 5H-4).

Note: Refer to Method 5, Section 4.1.5 to assist in calculation of results involving two filter assemblies.

7.8 Particulate Concentration.

$c_s = (0.001\ g/mg)\ (m_n/V_{m(std)})$ Eq. 5H-5

7.9 Sample Flow Rate Adjustment.

$$a = \frac{S_1}{S_i} \quad \text{Eq. 5H-6}$$

7.10 Carbon Balance for Total Moles of Exhaust Gas (dry)/Kg of Wood Burned in the Exhaust Gas.

$$N_T = \left(\frac{K_3 N_C}{(Y_{CO_2} + Y_{CO} + Y_{HC})}\right) \quad \text{Eq. 5H-7}$$

where:
K_3 = 1000 g/kg for metric units.
K_3 = 1.0 lb/lb for English units.

Note: The NO_x/SO_x portion of the gas is assumed to be negligible.

7.11 Total Stack Gas Flow Rate.

$Q_{sd} = K_4 N_T BR$ Eq. 5H-8

where:
K_4 = 0.02406 for metric units, dsm^3/g-mole.
= 384.8 for English units, dscf/lb-mole.

7.12 Particulate Emission Rate.

$E = c_s Q_{sd}$ Eq. 5H-9

7.13 Proportional Rate Variation. Calculate PR for each 10-minute interval, i, of the test run.

$$PR = \left(\frac{\theta S_i V_{mi(std)}}{10 \sum_{i=1}^{n} [S_i V_{mi(std)}]}\right) \times 100 \quad \text{Eq. 5H-10}$$

7.14 Acceptable Results. If no more than 15 percent of the PR values for all the intervals exceed 90 percent ≤ PR ≤ 110 percent, and if no PR value for any interval exceeds 75 ≤ PR ≤ 125 percent, the results are acceptable. If the PR values for the test runs are judged to be unacceptable, report the test run emission results, but do not include the test run results in calculating the weighted average emission rate, and repeat the test.

8. Bibliography

1. Same as for Method 5, citations 1 through 11, with the addition of the following:
2. Oregon Department of Environmental Quality Standard Method for Measuring the emissions and efficiencies of Woodstoves, July 8, 1984. Pursuant to Oregon Administrative Rules Chapter 340, Division 21.
3. American Society for Testing Materials Proposed Test Methods for Heating Performance and Emissions of Residential Wood-fired Closed Combustion-Chamber Heating Appliances. E-6 Proposal P 180. August 1986.

BILLING CODE 6560-50-M

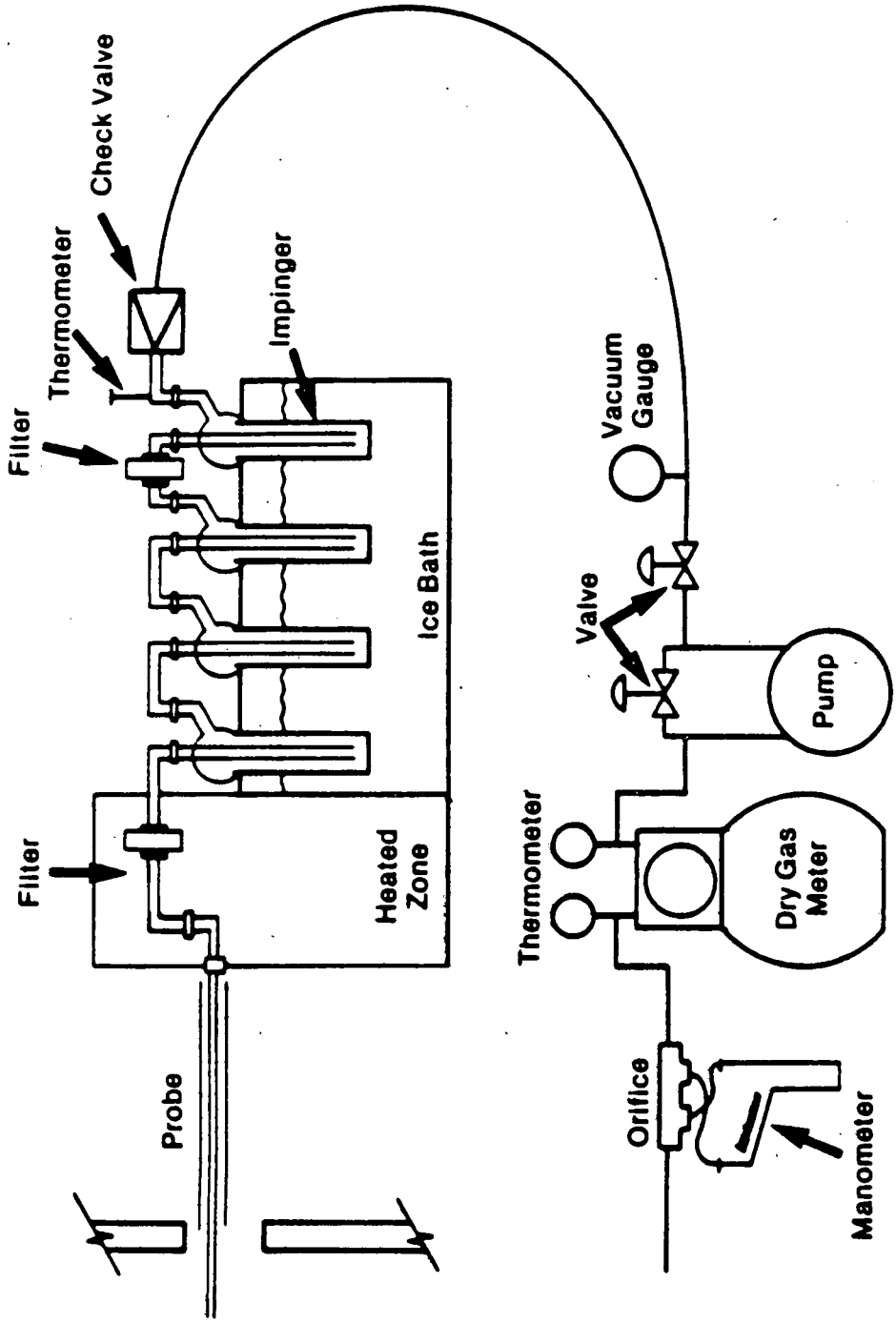

Figure 5H-1. Sampling train.

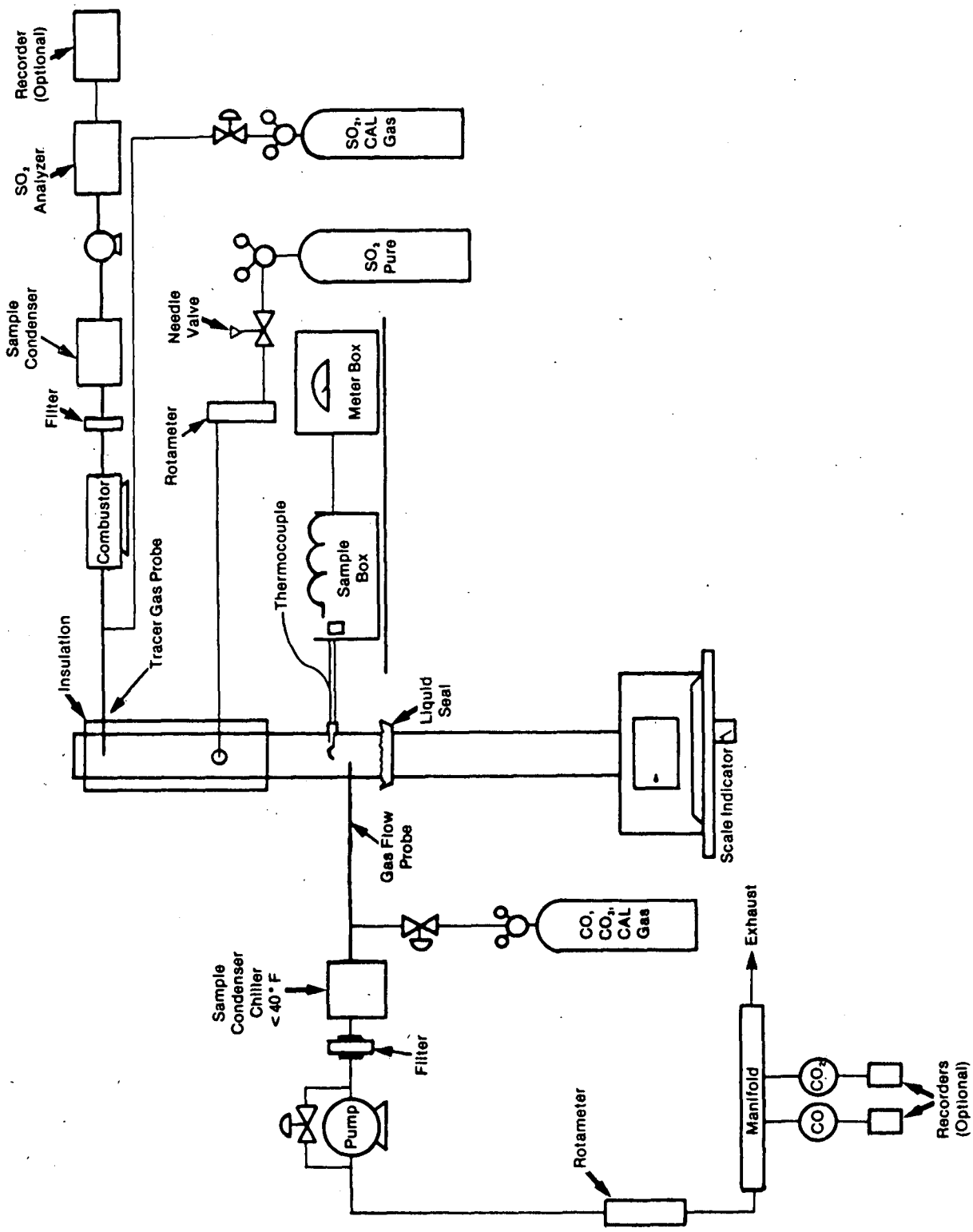

Figure 5H-2. Test system schematic for Method 5H.

Stove _____
Test Method _____
Operator _____
Date _____
Run No. _____
Start Time _____
Stop Time _____
Sample Box No. _____
Meter Box No. _____
Meter ΔH @ (optional) _____
C Factor _____

Pitot tube coefficient, Cp _____
Room temperature, °C, (°F) _____
Barometric pressure mb (in. Hg) _____
Measured or assumed moisture, % _____
Nozzle identification No. m) _____
Average calibrated nozzle diameter, mm (in.) _____
Final leak rate, m³/min, (cfm) _____
Probe liner material _____
Draft or static pressure, mm H_2O (in. H_2O) _____
Filter Nos. _____

Clock time	Sampling time (θ) min.	Vacuum mm Hg (in. Hg)	Flue temperature (T_s) °C (°F)	Flow in Flue m³/min (ft³/min)	Volume sampled in period m³ (ft³)	Gas sample volume m³ (ft³)	Gas sample temperature at dry gas meter °C (°F)	°C (°F)	Front filter holder temperature °C (°F)	Temperature of gas leaving dryer or last impinger °C (°F)
Total							Avg.	Avg.		
Average							Avg.			

Figure 5H-3. Data sheet.

Stove _____
Date _____
Run No. _____
Filter Nos. _____
Amount liquid lost during transport (ml) _____
Acetone blank volume, ml _____
Acetone wash volume, ml _____
Acetone blank concentration, mg/ml _____
Acetone wash blank, mg _____

Dichloromethane blank volume, ml _____
Dichloromethane wash volume, ml _____
Dichloromethane blank concentration, mg/ml _____
Dichloromethane wash blank, mg _____
Water blank volume, ml _____
Water wash volume, ml _____
Water blank concentration, mg/ml _____
Water wash blank, mg _____

Container number	Weight of particulate collected, mg		
	Final weight	Tare weight	Weight gain
1 _____			
2 _____			
3 _____			
4 _____			
5 _____			
Total _____			
Less acetone blank _____			
Less dichloromethane blank _____			
Less water blank _____			
Weight of particulate matter _____			

	Volume of liquid water collected	
	Impinger volume, ml	Silica gel weight, g
Final _____		
Initial _____		
Liquid collected _____		
Total volume collected _____		g* ml

*Convert weight of water to volume by dividing total weight increase by density of water (1 g/ml).

$$\frac{\text{Increase, g}}{(1\ \text{g/ml})} = \text{Volume water, ml}$$

Figure 5H-4. Analysis data sheet.

BILLING CODE 6560-50-C

Method 28—Certification and Auditing of Wood Heaters

1. Applicability and Principle

1.1 Applicability. This method is applicable for the certification and auditing of wood heaters. This method describes the test facility, test fuel charge, and wood heater operation as well as procedures for determining burn rates and particulate emission rates and for reducing data.

1.2 Principle. Particulate matter emissions are measured from a wood heater burning a prepared test fuel crib in a test facility maintained at a set of prescribed conditions.

2. Definitions

2.1 Burn Rate. The rate at which test fuel is consumed in a wood heater. Measured in kilograms of wood (dry basis) per hour (kg/hr).

2.2 Certification or Audit Test. A series of at least four test runs conducted for certification or audit purposes that meets the burn rate specifications in Section 5.

2.3 Firebox. The chamber in the wood heater in which the test fuel charge is placed and combusted.

2.4 Secondary Air Supply. An air supply that introduces air to the wood heater such that the burn rate is not altered by more than 25 percent when the secondary air supply is adjusted during the test run. The wood heater manufacturer can document this through design drawings that show the secondary air is introduced only into a mixing chamber or secondary chamber outside the firebox.

2.5 Test Facility. The area in which the wood heater is installed, operated, and sampled for emissions.

2.6 Test Fuel Charge. The collection of test fuel pieces placed in the wood heater at the start of the emission test run.

2.7 Test Fuel Crib. The arrangement of the test fuel charge with the proper spacing requirements between adjacent fuel pieces.

2.8 Test Fuel Loading Density. The weight of the as-fired test fuel charge per unit volume of usable firebox.

2.9 Test Fuel Piece. The 2 x 4 or 4 x 4 wood piece cut to the length required for the test fuel charge and used to construct the test fuel crib.

2.10 Test Run. An individual emission test which encompasses the time required to consume the mass of the test fuel charge.

2.11 Usable Firebox Volume. The volume of the firebox determined using the following definitions:

2.11.1 Height. The vertical distance extending above the loading door, if fuel could reasonably occupy that space, but not more than 2 inches above the top (peak height) of the loading door, to the floor of the firebox (i.e., below a permanent grate) if the grate allows a 1-inch diameter piece of wood to pass through the grate, or, if not, to the top of the grate. Firebox height is not necessarily uniform but must account for variations caused by internal baffles, air channels, or other permanent obstructions.

2.11.2 Length. The longest horizontal fire chamber dimension that is parallel to a wall of the chamber.

2.11.3 Width. The shortest horizontal fire chamber dimension that is parallel to a wall of the chamber.

2.12 Wood Heater. An enclosed, woodburning appliance capable of and intended for space heating or domestic water heating, as defined in the applicable regulation.

2.13 Pellet Burning Wood Heater. A wood heater which meets the following criteria: (1) The manufacturer makes no reference to burning cord wood in advertising or other literature, (2) the unit is safety listed for pellet fuel only, (3) the unit operating and instruction manual must state that the use of cordwood is prohibited by law, and (4) the unit must be manufactured and sold including the hopper and auger combination as integral parts.

3. Apparatus

3.1 Insulated Solid Pack Chimney. For installation of wood heaters. Solid pack insulated chimneys shall have a minimum of 2.5 cm (1 in.) solid pack insulating material surrounding the entire flue and possess a label demonstrating conformance to U.L. Standard 103 (incorporated by reference. See § 60.17).

3.2 Platform Scale and Monitor. For monitoring of fuel load weight change. The scale shall be capable of measuring weight to within 0.05 kg (0.1 lb) or 1 percent of the initial test fuel charge weight, whichever is greater.

3.3 Wood Heater Temperature Monitors. Seven, each capable of measuring temperature to within 1.5 percent of expected absolute temperatures.

3.4 Test Facility Temperature Monitor. A thermocouple located centrally in a vertically oriented 150 mm (6 in.) long, 50 mm (2 in.) diameter pipe shield that is open at both ends, capable of measuring temperature to within 1.5 percent of expected temperatures.

3.5 Balance (optional). Balance capable of weighing the test fuel charge to within 0.05 kg (0.1 lb).

3.6 Moisture Meter. Calibrated electrical resistance meter for measuring test fuel moisture to within 1 percent moisture content.

3.7 Anemometer. Device capable of detecting air velocities less than 0.10 m/sec (20 ft/min), for measuring air velocities near the test appliance.

3.8 Barometer. Mercury, aneroid or other barometer capable of measuring atmospheric pressure to within 2.5 mm Hg (0.1 in. Hg).

3.9 Draft Gauge. Electromanometer or other device for the determination of flue draft or static pressure readable to within 0.50 Pa (0.002 in. H_2O).

3.10 Humidity Gauge. Psychrometer or hygrometer for measuring room humidity.

3.11 Sampling Methods. Use particulate emission measurement Method 5G or Method 5H to determine particulate concentrations, gas flow rates, and particulate emission rates.

4. Test Facility, Test Fuel Properties, and Test Fuel Charge Specifications

4.1 Test Facility.

4.1.1 Wood Heater Flue. Steel flue pipe extending to 2.6±0.15 m (8.5±0.5 ft) above the top of the platform scale, and above this level, insulated solid pack type chimney extending to 4.6+0.3 m (15±1 ft) above the platform scale, and of the size specified by the wood heater manufacturer. This applies to both freestanding and insert type wood heaters.

Other chimney types (e.g., solid pack insulated pipe) may be used in place of the steel flue pipe if the wood heater manufacturer's written appliance specifications require such chimney for home installation (e.g., zero clearance wood heater inserts). Such alternative chimney or flue pipe must remain and be sealed with the wood heater following the certification test.

4.1.2 Test Facility Conditions. The test facility temperature shall be maintained between 18 and 32 °C (65 and 90 °F) during each test run.

Air velocities within 0.6 m (2 ft) of the test appliance and exhaust system shall be less than 0.25 m/sec (50 ft/min) without fire in the unit.

The flue shall discharge into the same space or into a space freely communicating with the test facility. Any hood or similar device used to vent combustion products shall not induce a draft greater than 1.25 Pa (0.005 in. H_2O) on the wood heater measured when the wood heater is not operating.

For test facilities with artificially induced barometric pressures (e.g., pressurized chambers), the barometric pressure in the test facility shall not exceed 1,033 mb (30.5 in. Hg) during any test run.

4.2 Test Fuel Properties. The test fuel shall conform to the following requirements:

4.2.1 Fuel Species. Untreated, air-dried, Douglas fir lumber. Kiln-dried lumber is not permitted. The lumber shall be certified C grade (standard) or better Douglas fir by a lumber grader at the mill of origin as specified in the West Coast Lumber Inspection Bureau standard No. 16 (incorporated by reference. See § 60.17).

4.2.2 Fuel Moisture. The test fuel shall have a moisture content range between 16 to 20 percent on a wet basis (19 to 25 percent dry basis).

Addition of moisture to previously dried wood is not allowed. It is recommended that the test fuel be stored in a temperature and humidity-controlled room.

4.2.3 Fuel Temperature. The test fuel shall be at the test facility temperature 18 to 32 °C (65 to 90 °F).

4.3 Test Fuel Charge Specifications.

4.3.1 Fuel Dimensions. The dimensions of each test fuel piece shall conform to the nominal measurements of 2 x 4 and 4 x 4 lumber. Each piece of test fuel (not including spacers) shall be of equal length, except as necessary to meet requirements in Section 6.2.5, and shall closely approximate ⅔ the dimensions of the length of the usable firebox. The fuel piece dimensions shall be determined in relation to the appliance's firebox volume according to guidelines listed below:

4.3.1.1 If the usable firebox volume is less than or equal to 0.043 m^3 (1.5 ft^3), use 2 x 4 lumber.

4.3.1.2 If the usable firebox volume is greater than 0.043 m^3 (1.5 ft^3) and less than or equal to 0.085 m^3 (3.0 ft^3), use 2 x 4 and 4 x 4 lumber. About half the weight of the test fuel charge shall be 2 x 4 lumber, and the remainder shall be 4 x 4 lumber.

4.3.1.3 If the usable firebox volume is greater than 0.085 m^3 (3.0 ft^3), use 4 x 4 lumber.

4.3.2 Test Fuel Spacers. Air-dried, Douglas fir lumber meeting the fuel properties in Section 4.2. The spacers shall be 130 x 40 x 20 mm (5 x 1.5 x 0.75 in.).

4.3.3 Test Fuel Charge Density. The test fuel charge density shall be 112 ± 11.2 kg/m^3 (7 ± 0.7 lb/ft^3) of usable firebox volume on a wet basis.

4.4 Wood Heater Thermal Equilibrium. The average of the wood heater surface temperatures at the end of the test run shall agree with the average surface temperature at the start of the test run to within 70 °C (125 °F).

5. Burn Rate Criteria

5.1 Burn Rate Categories. One emission test run is required in each of the following burn rate categories:

Burn Rate Categories

(Average kg/hr, dry basis)

Category 1	Category 2	Category 3	Category 4
<0.80	0.80 to 1.25	1.25 to 1.90	Maximum burn rate.

5.1.1 Maximum Burn Rate. For Category 4, the wood heater shall be operated with the primary air supply inlet controls fully open (or, if thermostatically controlled, the thermostat shall be set at maximum heat output) during the entire test run, or the maximum burn rate setting specified by the manufacturer's written instructions.

5.1.2 Other Burn Rate Categories. For burn rates in Categories 1 through 3, the wood heater shall be operated with the primary air supply inlet control, or other mechanical control device, set at a predetermined position necessary to obtain the average burn rate required for the category.

5.2 Alternative Burn Rates for Burn Rate Categories 1 and 2. If a wood heater cannot be operated at a burn rate below 0.80 kg/hr, two test runs shall be conducted with burn rates within Category 2. If a wood heater cannot be operated at a burn rate below 1.25 kg/hr, the flue shall be dampered or the air supply otherwise controlled in order to achieve two test runs within Category 2.

Evidence that a wood heater cannot be operated at a burn rate less than 0.80 kg/hr shall include documentation of two or more attempts to operate the wood heater in burn rate Category 1 and fuel combustion has stopped, or results of two or more test runs demonstrating that the burn rates were greater than 0.80 kg/hr when the air supply controls were adjusted to the lowest possible position or settings. Stopped fuel combustion is evidenced when an elapsed time of 30 minutes or more has occurred without a measurable (< 0.05 kg (0.1 lb) or 1.0 percent, whichever is greater) weight change in the test fuel charge. See also Section 6.4.3. Report the evidence and the reasoning used to determine that a test in burn rate Category 1 cannot be achieved; for example, two attempts to operate at a burn rate of 0.4 kg/hr are not sufficient evidence that burn rate Category 1 cannot be achieved.

Note: After July 1, 1990, if a wood heater cannot be operated at a burn rate less than 0.80 kg/hr, at least one test run with an average burn rate of 1.00 kg/hr or less shall be conducted. Additionally, if flue dampering must be used to achieve burn rates below 1.25 kg/hr (or 1.0 kg/hr), results from a test run conducted at burn rates below 0.90 kg/hr need not be reported or included in the test run average provided that such results are replaced with results from a test run meeting the criteria above.

6. Procedures

6.1 Catalytic Combustor and Wood Heater Aging. The catalyst-equipped wood heater or a wood heater of any type shall be aged before the certification test begins. The aging procedure shall be conducted and documented by a testing laboratory accredited according to procedures in § 60.535 of 40 CFR Part 60.

6.1.1 Catalyst-equipped Wood Heater. Operate the catalyst-equipped wood heater using fuel described in Section 4.2 or cordwood with a moisture content between 15 and 25 percent on a wet basis. Operate the wood heater at a medium burn rate (Category 2 or 3) with a new catalytic combustor in place and in operation for at least 50 hours. Record and report hourly catalyst exit temperature data (Section 6.2.2) and the hours of operation.

6.1.2 Non-Catalyst Wood Heater. Operate the wood heater using the fuel described in Section 6.1.1 at a medium burn rate for at least 10 hours. Record and report the hours of operation.

6.2 Pretest Preparation. Record the test fuel charge dimensions and weights, and wood heater and catalyst descriptions as shown in the example in Figure 28–3.

6.2.1 Wood Heater Installation. Assemble the wood heater appliance and parts in conformance with the manufacturer's written installation instructions. Place the wood heater centrally on the platform scale and connect the wood heater to the flue described in Section 4.1.1. Clean the flue with an appropriately sized, wire chimney brush before each certification test.

6.2.2 Wood Heater Temperature Monitors. For catalyst-equipped wood heaters, locate a temperature monitor (optional) about 25 mm (1 in.) upstream of the catalyst at the centroid of the catalyst face area, and locate a temperature monitor (mandatory) that will indicate the catalyst exhaust temperature. This temperature monitor is centrally located within 25 mm (1 in.) downstream at the centroid of catalyst face area. Record these locations.

Locate wood heater surface temperature monitors at five locations on the wood heater firebox exterior surface. Position the temperature monitors centrally on the top surface, on two sidewall surfaces, and on the bottom and back surfaces. Position the monitor sensing tip on the firebox exterior surface inside of any heat shield, air circulation walls, or other wall or shield separated from the firebox exterior surface. Surface temperature locations for unusual design shapes (e.g., spherical, etc.) shall be positioned so that there are four surface temperature monitors in both the vertical and horizontal planes passing at right angles through the centroid of the firebox, not including the fuel loading door (total of five temperature monitors).

6.2.3 Test Facility Conditions. Locate the test facility temperature monitor on the horizontal plane that includes the primary air intake opening for the wood heater. Locate the temperature monitor 1 to 2 m (3 to 6 ft) from the front of the wood heater in the 90° sector in front of the wood heater.

Use an anemometer to measure the air velocity. Measure and record the room air velocity before the pretest ignition period (Section 6.3) and once immediately following the test run completion.

Measure and record the test facility's ambient relative humidity, barometric pressure, and temperature before and after each test run.

Measure and record the flue draft or static pressure in the flue at a location no greater than 0.3 m (1 ft) above the flue connector at the wood heater exhaust during the test run at the recording intervals (Section 6.4.2).

6.2.4 Wood Heater Firebox Volume. Determine the firebox volume using the definitions for height, width, and length in Section 2. Volume adjustments due to presence of firebrick and other permanent fixtures may be necessary. Adjust width and length dimensions to extend to the metal wall of the wood heater above the firebrick or permanent obstruction if the firebrick or obstruction extending the length of the side(s) or back wall extends less than one-third of the usable firebox height. Use the width or length dimensions inside the firebrick if the firebrick extends more than one-third of the usable firebox height. If a log retainer or grate is a permanent fixture and the manufacturer recommends that no fuel be placed outside the retainer, the area outside of the retainer is excluded from the firebox volume calculations.

In general, exclude the area above the ash lip if that area is less than 10 percent of the usable firebox volume. Otherwise, take into account consumer loading practices. For instance, if fuel is to be loaded front-to-back, an ash lip may be considered usable firebox volume.

Include areas adjacent to and above a baffle (up to two inches above the fuel loading opening) if four inches or more horizontal space exist between the edge of the baffle and a vertical obstruction (e.g., sidewalls or air channels).

6.2.5 Test Fuel Charge. Prepare the test fuel pieces in accordance with the specifications in Section 4.3. Determine the test fuel moisture content with a calibrated electrical resistance meter or other equivalent performance meter. (To convert moisture meter readings from the dry basis to the wet basis: (100)(percent dry reading) ÷ (100 + percent dry reading) = percent moisture wet basis.) Determine fuel moisture for each fuel piece (not including spacers) by averaging at least three moisture meter readings, one from each of three sides, measured parallel to the wood grain. Average

all the readings for all the fuel pieces in the test fuel charge. If an electrical resistance type meter is used, penetration of insulated electrodes shall be one-fourth the thickness of the test fuel piece or 19 mm (0.75 in.), whichever is greater. Measure the moisture content within a 4-hour period prior to the test run. Determine the fuel temperature by measuring the temperature of the room where the wood has been stored for at least 24 hours prior to the moisture determination.

Attach the spacers to the test fuel pieces with uncoated, ungalvanized nails or staples as illustrated in Figure 28–1. Attachment of spacers to the top of the test fuel piece(s) on top of the test fuel charge is optional.

To avoid stacking difficulties, or when a whole number of test fuel pieces does not result, all piece lengths shall be adjusted uniformly to remain within the specified loading density. The shape of the test fuel crib shall be geometrically similar to the shape of the firebox volume without resorting to special angular or round cuts on the individual fuel pieces.

6.2.6 Sampling Method. Prepare the sampling equipment as defined by the selected method. Collect one particulate emission sample for each test run.

6.2.7 Secondary Air Adjustment Validation. If design drawings do not show the introductions of secondary air into a chamber outside the firebox (Section 2.4), conduct a separate test of the wood heater's secondary air supply. Operate the wood heater at a burn rate in Category 1 (Sections 5.1 or 5.2) with the secondary air supply operated following the manufacturer's written instructions. Start the secondary air validation test run as described in Section 6.4.1, except no emission sampling is necessary and burn rate data shall be recorded at 5-minute intervals.

After the start of the test run, operate the wood heater with the secondary air supply set as per the manufacturer's instructions, but with no adjustments to this setting. After 25 percent of the test fuel has been consumed, adjust the secondary air supply controls to another setting, as per the manufacturer,s instructions. Record the burn rate data (5-minute intervals) for 20 minutes following the air supply adjustment.

Adjust the air supply control(s) to the original position(s), operate at this condition for at least 20 minutes, and repeat the air supply adjustment procedure above. Repeat the procedure three times at equal intervals over the entire burn period as defined in Section 6.4. If the secondary air adjustment results in a burn rate change of more than an average of 25 percent between the 20-minute periods before and after the secondary adjustments, the secondary air supply shall be considered a primary air supply, and no adjustment to this air supply is allowed during the test run.

6.3 Pretest Ignition. Build a fire in the wood heater in accordance with the manufacturer's written instructions.

6.3.1 Pretest Fuel Charge. Crumpled newspaper loaded with kindling may be used to help ignite the pretest fuel. The pretest fuel, used to sustain the fire, shall meet the same fuel requirements prescribed in Section 4.2. The pretest fuel charge shall consist of whole 2 x 4's that are no less than 1/3 the length of the test fuel pieces. Pieces of 4 x 4 lumber in approximately the same weight ratio as for the test fuel charge may be added to the pretest fuel charge.

6.3.2 Wood Heater Operation and Adjustments. Set the air inlet supply controls at any position that will maintain combustion of the pretest fuel load. At least one hour before the start of the test run, set the air supply controls at the approximate positions necessary to achieve the burn rate desired for the test run. Adjustment of the air supply controls, fuel addition or subtractions, and coalbed raking shall be kept to a minimum but are allowed up to 15 minutes prior to the start of the test run. For the purposes of this method, coalbed raking is the use of a metal tool (poker) to stir coals, break burning fuel into smaller pieces, dislodge fuel pieces from positions of poor combustion, and check for the condition of uniform charcoalization. Record all adjustments made to the air supply controls, adjustments to and additions or subtractions of fuel, and any other changes to wood heater operations that occur during pretest ignition period. Record fuel weight data and wood heater temperature measurements at 10-minute intervals during the hour of the pretest ignition period preceding the start of the test run. During the 15-minute period prior to the start of the test run, the wood heater loading door shall not be open more than a total of 1 minute. Coalbed raking is the only adjustment allowed during this period.

Note: One purpose of the pretest ignition period is to achieve uniform charcoalization of the test fuel bed prior to loading the test fuel charge. Uniform charcoalization is a general condition of the test fuel bed evidenced by an absence of large pieces of burning wood in the coal bed and the remaining fuel pieces being brittle enough to be broken into smaller charcoal pieces with a metal poker. Manipulations to the fuel bed prior to the start of the test run should be done to achieve uniform charcoalization while maintaining the desired burn rate. In addition, some wood heaters (e.g., high mass units) may require extended pretest burn time and fuel additions to reach an initial average surface temperature sufficient to meet the thermal equilibrium criteria in Section 4.4.

The weight of pretest fuel remaining at the start of the test run is determined as the difference between the weight of the wood heater with the remaining pretest fuel and the tare weight of the cleaned, dry wood heater with or without dry ash or sand added consistent with the manufacturer's instructions and the owner's manual. The tare weight of the wood heater must be determined with the wood heater (and ash, if added) in a dry condition.

6.4 Test Run. Complete a test run in each burn rate category, as follows:

6.4.1 Test Run Start. When the kindling and pretest fuel have been consumed to leave a fuel weight between 20 and 25 percent of the weight of the test fuel charge, record the weight of the fuel remaining and start the test run. Record and report any other criteria, in addition to those specified in this section, used to determine the moment of the test run start (e.g., firebox or catalyst temperature), whether such criteria are specified by the wood heater manufacturer or the testing laboratory. Record all wood heater individual surface temperatures, catalyst temperatures, any initial sampling method measurement values, and begin the particulate emission sampling. Within 1 minute following the start of the test run, open the wood heater door, load the test fuel charge, and record the test fuel charge weight. Recording of average, rather than individual, surface temperatures is acceptable for tests conducted in accordance with § 60.533(o)(3)(i) of 40 CFR Part 60.

Position the fuel charge so that the spacers are parallel to the floor of the firebox, with the spacer edges abutting each other. If loading difficulties result, some fuel pieces may be placed on edge. If the usable firebox volume is between 0.043 and 0.085 m^3 (1.5 and 3.0 ft^3), alternate the piece sizes in vertical stacking layers to the extent possible. For example, place 2 x 4's on the bottom layer in direct contact with the coal bed and 4 x 4's on the next layer, etc. (See Figure 28–2). Position the fuel pieces parallel to each other and parallel to the longest wall of the firebox to the extent possible within the specifications in Section 6.2.5.

Load the test fuel in appliances having unusual or unconventional firebox design maintaining air space intervals between the test fuel pieces and in conformance with the manufacturer's written instructions. For any appliance that will not accommodate the loading arrangement specified in the paragraph above, the test facility personnel shall contact the Administrator for an alternative loading arrangement.

The wood heater door may remain open and the air supply controls adjusted up to five minutes after the start of the test run in order to make adjustments to the test fuel charge and to ensure ignition of the test fuel charge has occurred. Within the five minutes after the start of the test run, close the wood heater door and adjust the air supply controls to the position determined to produce the desired burn rate. No other adjustments to the air supply controls or the test fuel charge are allowed (except as specified in Sections 6.4.3 and 6.4.4) after the first five minutes of the test run. Record the length of time the wood heater door remains open, the adjustments to the air supply controls, and any other operational adjustments.

6.4.2 Data Recording. Record fuel weight data, wood heater individual surface and catalyst temperature measurements, other wood heater operational data (e.g., draft), test facility temperature and sampling method data at 10-minute intervals (or more frequently at the option of the tester) as shown on example data sheet, Figure 28–4.

6.4.3 Test Fuel Charge Adjustment. The test fuel charge may be adjusted (i.e., re-positioned) once during a test run if more than 60 percent of the initial test fuel charge weight has been consumed and more than 10 minutes have elapsed without a measurable (< 0.05 kg (0.1 lb) or 1.0 percent, whichever is greater) weight change. The time used to make this adjustment shall be less than 15 seconds.

6.4.4 Air Supply Adjustment. Secondary air supply controls may be adjusted once during the test run following the manufacturer's written instructions (see Section 6.2.7). No other air supply adjustments are allowed during the test run.

Recording of wood heater flue draft during the test run is optional for tests conducted in accordance with § 60.533(o)(3)(i) of 40 CFR Part 60.

6.4.5 Auxiliary Wood Heater Equipment Operation. Heat exchange blowers sold with the wood heater shall be operated during the test run following the manufacturer's written instructions. If no manufacturer's written instructions are available, operate the heat exchange blower in the "high" position. (Automatically operated blowers shall be operated as designed.) Shaker grates, by-pass controls, or other auxiliary equipment may be adjusted only one time during the test run following the manufacturer's written instructions.

Record all adjustments on a wood heater operational written record.

Note: If the wood heater is sold with a heat exchange blower as an option, test the wood heater with the heat exchange blower operating as described in Sections 5 and 6 and report the results. As an alternative to repeating all test runs without the heat exchange blower operating, the tester may conduct one test run without the blower operating as described in Section 6.4.5 at a burn rate in Category 2 (Section 5.1). If the emission rate resulting from this test run without the blower operating is equal to or less than the emission rate plus 1.0 g/hr for the test run in burn rate Category 2 with the blower operating, the wood heater may be considered to have the same average emission rate with or without the blower operating. Additional test runs without the blower operating are unnecessary.

6.5 Consecutive Test Runs. Test runs on a wood heater may be conducted consecutively provided that a minimum one-hour interval occurs between test runs.

6.6 Additional Test Runs. The testing laboratory may conduct more than one test run in each of the burn rate categories specified in Section 5.1. If more than one test run is conducted at a specified burn rate, the results from at least two-thirds of the test runs in that burn rate category shall be used in calculating the weighted average emission rate (see Section 8.1). The measurement data and results of all test runs shall be reported regardless of which values are used in calculating the weighted average emission rate (see Note: in Section 5.2).

6.7 Pellet Burning Heaters. Certification testing procedures for pellet burning wood heaters are based on the procedures in this method. The differences in the procedures from the sections in Method 28 are as follows:

6.7.1 Test Fuel Properties. The test fuel shall be all wood pellets with a moisture content no greater than 20 percent on a wet basis (25 percent on a dry basis). Determine the wood moisture content with either ASTM-D2016-74(82)(Method A) or ASTM D4442-84. (incorporated by reference. See Section 60.17).

6.7.2 Test Fuel Charge Specifications. The test fuel charge size shall be as per the manufacturer s written instructions for maintaining the desired burn rate.

6.7.3 Wood Heater Firebox Volume. The firebox volume need not be measured or determined for establishing the test fuel charge size. The firebox dimensions and other heater specifications needed to identify the heater for certification purposes shall be reported.

6.7.4 Heater Installation. Arrange the heater with the fuel supply hopper on the platform scale as described in Section 6.2.1.

6.7.5 Pretest Ignition. Start a fire in the heater as directed by the manufacturer's written instructions, and adjust the heater controls to achieve the desired burn rate. Operate the heater at the desired burn rate for at least 1 hour before the start of the test run.

6.7.6 Sampling Method. Method 5G or 5H shall be used for the certification testing of pellet burners. Prepare the sampling equipment as described in Method 5G or 5H. Collect one particulate emission sample for each test run.

6.7.7 Test Run. Complete a test run in each burn rate category as follows:

6.7.7.1 Test Run Start. When the wood heater has operated for at least 1 hour at the desired burn rate, add fuel to the supply hopper as necessary to complete the test run, record the weight of the fuel in the supply hopper (the wood heater weight), and start the test run. Add no additional fuel to the hopper during the test run.

Record all the wood heater surface temperatures, the initial sampling method measurement values, the time at the start of the test, and begin the emission sampling. Make no adjustments to the wood heater air supply or wood supply rate during the test run.

6.7.7.2 Data Recording. Record the fuel (wood heater) weight data, wood heater temperature and operational data, and emission sampling data as described in Section 6.4.2.

6.7.7.3 Test Run Completion. Continue emission sampling and wood heater operation for 2 hours. At the end of the test run, stop the particulate sampling, and record the final fuel weight, the run time, and all final measurement values.

6.7.8 Calculations. Determine the burn rate using the difference between the initial and final fuel (wood heater) weights and the procedures described in Section 8.3. Complete the other calculations as described in Section 8.

7. Calibrations

7.1 Platform Scale. Perform a multipoint calibration (at least five points spanning the operational range) of the platform scale before its initial use. The scale manufacturer's calibration results are sufficient for this purpose. Before each certification test, audit the scale with the wood heater in place by weighing at least one calibration weight (Class F) that corresponds to 20 percent to 80 percent of the expected test fuel charge weight. If the scale cannot reproduce the value of the calibration weight within 0.05 kg (0.1 lbs) or 1 percent of the expected test fuel charge weight, whichever is greater, recalibrate the scale before use with at least five calibration weights spanning the operational range of the scale.

7.2 Balance (optional). Calibrate as described in Section 7.1.

7.3 Temperature Monitor. Calibrate as in Method 2, Section 4.3, before the first certification test and semiannually thereafter.

7.4 Moisture Meter. Calibrate as per the manufacturer's instructions before each certification test.

7.5 Anemometer. Calibrate the anemometer as specified by the manufacturer's instructions before the first certification test and semiannually thereafter.

7.6 Barometer. Calibrate against a mercury barometer before the first certification test and semiannually thereafter.

7.7 Draft Gauge. Calibrate as per the manufacturer's instructions; a liquid manometer does not require calibration.

7.8 Humidity Gauge. Calibrate as per the manufacturer's instructions before the first certification test and semiannually thereafter.

8. Calculations and Reporting

Carry out calculations retaining at least one extra decimal figure beyond that of the acquired data. Round off figures after the final calculation.

8.1 Weighted Average Emission Rate.

$$E_w = \frac{\sum_{i=1}^{n} (K_i E_i)}{\sum_{i=1}^{n} K_i} \qquad \text{Eq. 28-1}$$

where:

E_w = Weighted average emission rate, g/hr;

E_i = Emission rate for test run, i, from Method 5G or 5H, g/hr;

K_i = Test run weighting factor = P_{i+1} P_{i-1};

n = Total number of test runs;

P_i = Probability for burn rate during test run, i, obtained from Table 28-1. Use linear interpolation to determine probability values for burn rates between those listed on the table.

Note: P_o always equals 0, $P_{(n+1)}$ always equals 1, P_1 corresponds to the probability of the lowest recorded burn rate, P_2 corresponds to the probability of the next lowest burn rate, etc. An example calculation is shown on Figure 28-5.

8.2 Average Wood Heater Surface Temperatures. Calculate the average of the wood heater surface temperatures for the start of the test run (Section 6.3.1) and for the test run completion (Section 6.3.6). If the two average temperatures do not agree within 70°C (125°F), report the test run results, but do not include the test run results in the test average. Replace such test run results with results from another test run in the same burn rate category.

8.3 Burn Rate.

$$BR = \frac{60\ W_{wd}}{\theta}\ \frac{100\%M_w}{100} \qquad \text{Eq. 28-2}$$

Where:

BR = Dry wood burn rate, kg/hr (lb/hr)

W_{wd} = Total mass of wood burned during the test run, kg (lb)

θ - Total time of test run, min.

$\%M_w$ = Average moisture in test fuel charge, wet basis, percent.

8.4 Reporting Criteria. Submit both raw and reduced test data for wood heater tests. Specific reporting requirements are as follows:

8.4.1 Wood Heater Identification. Report wood heater identification information. An example data form is shown on Figure 28-4.

8.4.2 Test Facility Information. Report test facility temperature, air velocity, and humidity information. An example data form is shown on Figure 28-4.

8.4.3 Test Equipment Calibration and Audit Information. Report calibration and audit results for the platform scale, test fuel balance, test fuel moisture meter, and sampling equipment including volume metering systems and gaseous analyzers.

8.4.4 Pretest Procedure Description. Report all pretest procedures including pretest fuel weight, burn rates, wood heater temperatures, and air supply settings. An example data form is shown on Figure 28-4.

8.4.5 Particulate Emission Data. Report a summary of test results for all test runs and the weighted average emission rate. Submit copies of all data sheets and other records collected during the testing. Submit examples of all calculations.

8.4.6 Suggested Test Report Format.

a. Introduction

1. Purpose of test—certification, audit, efficiency, research and development.

2. Wood heater identification—manufacturer, model number, catalytic/noncatalytic, options.

3. Laboratory—name, location (altitude), participants.

4. Test information—date wood heater received, date of tests, sampling methods used, number of test runs.

b. Summary and Discussion of Results

1. Table of results (in order of increasing burn rate)—test run number, burn rate, particulate emission rate, efficiency (if determined), averages (indicate which test runs are used).

2. Summary of other data—test facility conditions, surface temperature averages, catalyst temperature averages, pretest fuel weights, test fuel charge weights, run times.

3. Discussion—Burn rate categories achieved, test run result selection, specific test run problems and solutions.

c. Process Description

1. Wood heater dimensions—volume, height, width, lengths (or other linear dimensions), weight, volume adjustments.

2. Firebox configuration—air supply locations and operation, air supply introduction location, refractory location and dimensions, catalyst location, baffle and by-pass location and operation (include line drawings or photographs).

3. Process operation during test—air supply settings and adjustments, fuel bed adjustments, draft.

4. Test fuel—test fuel properties (moisture and temperature), test fuel crib description (include line drawing or photograph), test fuel charge density.

d. Sampling Locations

Describe sampling location relative to wood heater. Include drawing or photograph.

e. Sampling and Analytical Procedures

1. Sampling methods—brief reference to operational and sampling procedures and optional and alternative procedures used.

2. Analytical methods—brief description of sample recovery and analysis procedures.

f. Quality Control and Assurance Procedures and Results

1. Calibration procedures and results—certification procedures, sampling and analysis procedures.

2. Test method quality control procedures—leak-checks, volume meter checks, stratification (velocity) checks, proportionality results.

Appendices

1. Results and Example Calculations. Complete summary tables and accompanying examples of all calculations.

2. Raw Data. Copies of all uncorrected data sheets for sampling measurements, temperature records and sample recovery data. Copies of all pretest burn rate and wood heater temperature data.

3. Sampling and Analytical Procedures. Detailed description of procedures followed by laboratory personnel in conducting the certification test, emphasizing particularly parts of the procedures differing from the methods (e.g., approved alternatives).

4. Calibration Results. Summary of all calibrations, checks, and audits pertinent to certification test results with dates.

5. Participants. Test personnel, manufacturer representatives, and regulatory observers.

6. Sampling And Operation Records. Copies of uncorrected records of activities not included on raw data sheets (e.g., wood heater door open times and durations).

7. Additional Information. Wood heater manufacturer's written instructions for operation during the certification test.

9. Bibliography

1. Oregon Department of Environmental Quality Standard Method for Measuring the Emissions and Efficiencies of Woodstoves, June 8, 1984. Pursuant to Oregon Administrative Rules Chapter 340, Division 21.

2. American Society for Testing Materials. Proposed Test Methods for Heating Performance and Emissions of Residential Wood-Fired Closed Combustion-Chamber Heating Appliances. E-6 Proposal P 180. August, 1986.

3. Radian Corporation, OMNI Environmental Services, Inc., Cumulative Probability for a Given Burn Rate Based on Data Generated in the CONEG and BPA Studies. Package of materials submitted to the Fifth Session of the Regulatory Negotiation Committee, July 16-17, 1986.

BILLING CODE 6560-50-M

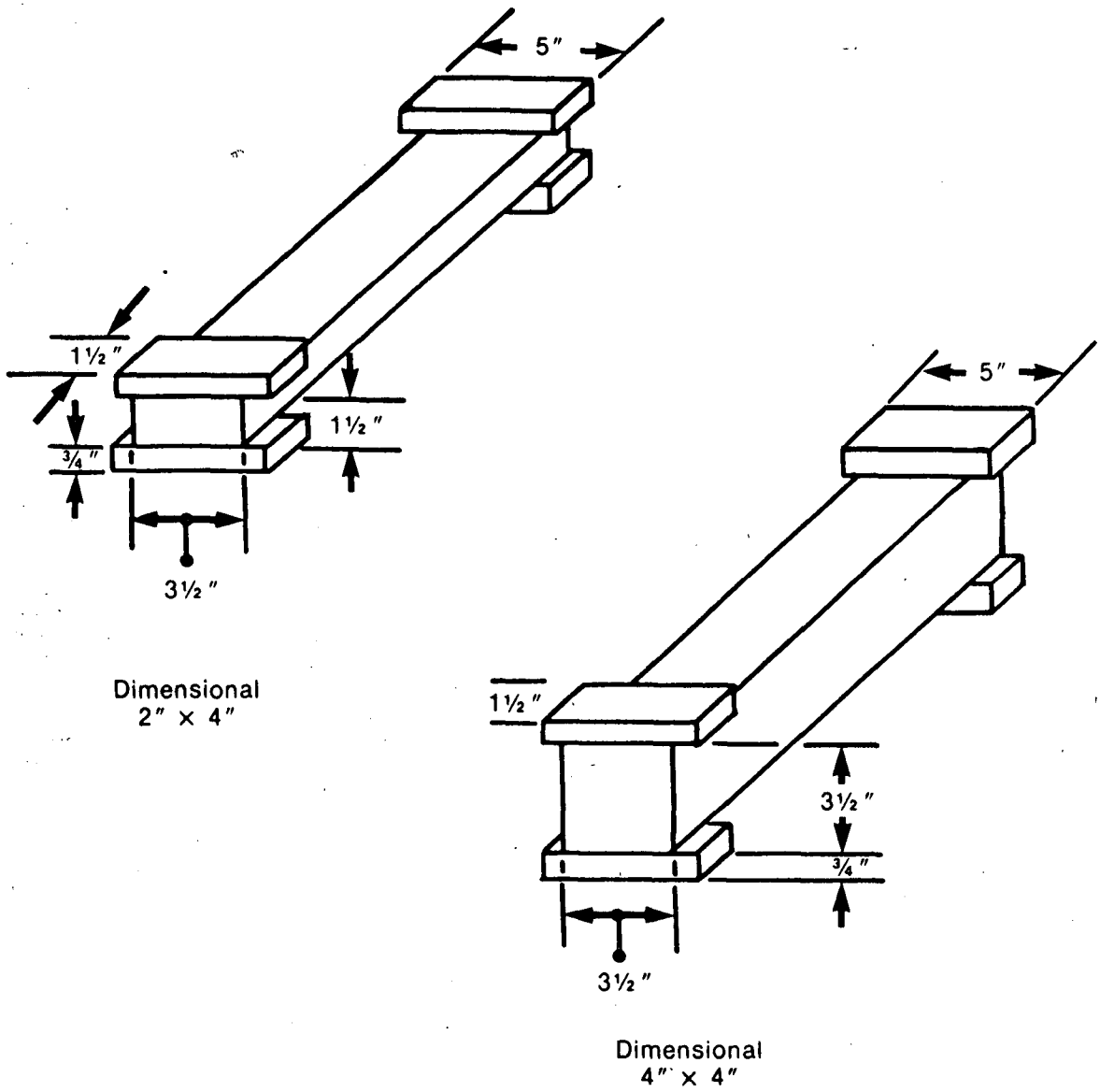

Figure 28-1. Test fuel spacer dimensions.

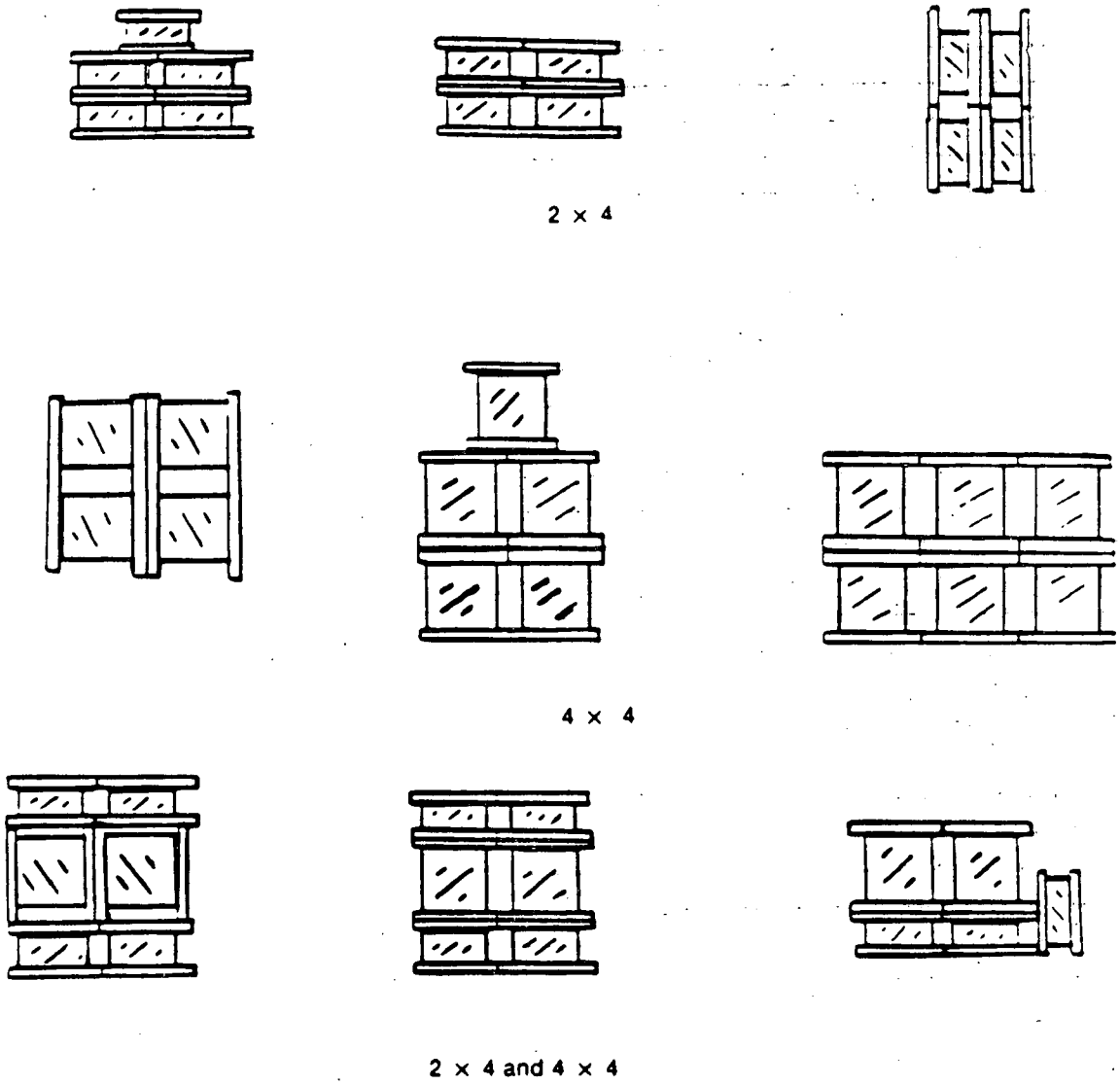

Figure 28 - 2. Test fuel crib arrangements

Appliance Identification

Appliance Manufacturer _____

Address _____

Agent and phone number _____

Name and Model number _____

Weight _____

Serial number _____

Design : Catalytic _____ Noncatalytic _____

Insert _____ Freestanding _____

Woodheater Description : (Attach figure showing air supplies and firebox configuration)

Materials of construction : _____

Air Introduction System : _____

Combustion Control Mechanisms : _____

Internal Baffles : _____

Other Features : _____

Catalyst Specifications

Manufacturer _____

Serial Number _____

Age _____ (Hours)

Dimensions _____ (in.)

Firebox Dimensions :

Volume _____ (ft^3)

Length _____ (in.)

Width _____ (in.)

Height _____ (in.)

Adjustments (Describe) _____ (in.)

Test Fuel Information
(For each Test Run)

Weight of Test Charge _____ (lb)

Number of 2 × 4's _____

Number of 4 × 4's _____

Length of test pieces _____ (in.)

Fuel Grade (Certification) _____

Fuel Moisture Content _____ (%)

Diagram or Photograph of Test Fuel Crib

Figure 28-3. Wood Heater and Test Fuel Information.

Date _____ Sheet _____ of _____

Operator _____

Sampling Method _____

Wood Heater Information

Manufacturer _____

Model _____

Primary Air Setting _____

Secondary Air Setting _____

Thermostat Setting _____

Other Settings _____

Test Run Information

Test Run No. _____

Burn Rate _____

Room Temperature before/after ____/____

Barometric Pressure before/after ____/____

Relative Humidity before/after ____/____

Room Air Velocity before/after ____/____

Surface Temp Average Pretest _____ end _____

Test Run Time (minutes)	Test Fuel Scale Reading (lb)	Surface Temperature					Catalyst Temperature		Flue Draft (in. H_2O)
							Inlet (°F)	Outlet (°F)	
(Pretest Period)									
(Test Run Start)									

8870462R

Figure 28 - 4. Test run wood heater operation data sheet

BILLING CODE 6560-50-C

FIGURE 28-5.—EXAMPLE CALCULATION OF WEIGHTED AVERAGE EMISSION RATE

Burn rate category	Test number	Burn rate (Dry-kg/hr)	Emissions (g/hr)
1	1	0.65	5.0
2[1]	2	0.85	6.7
2	3	0.90	4.7
2	4	1.00	5.3
3	5	1.45	3.8
4	6	2.00	5.1

[1] As permitted in Section 6.6, this test run may be omitted from the calculation of the weighted average emission rate because three runs were conducted for this burn rate category.

Test number	Burn rate	P_i	E_i	K_i
1	0.65	0.121	5.0	0.300
2	0.90	0.300	4.7	0.259
3	1.00	0.380	5.3	0.422
4	1.45	0.722	3.8	0.532
5	2.00	0.912	5.1	0.278

$K_1 = P_2 - P_o = 0.300 - 0 = 0.300$
$K_2 = P_3 - P_1 = 0.380 - 0.121 = 0.259$
$K_3 = P_4 - P_2 = 0.722 - 0.300 = 0.422$
$K_4 = P_5 - P_3 = 0.912 - 0.380 = 0.532$
$K_5 = P_6 - P_4 = 1 - 0.722 = 0.278$

$$\sum_{i=1}^{n} K_i = 0.300 + 0.259 + 0.422 + 0.532 + 0.278$$

$$\sum_{i=1}^{n} = 1.791$$

$$E_w = \frac{\sum_{i=1}^{n} (K_i E_i)}{\sum_{i=1}^{n} K_i}$$

E_w equals (0.3)(5.0)+(0.259)(4.7)+(0.422)(5.3)+(0.532)(3.8)+(0.278)(5.1) divided by 1.791

$E_w = 4.69$ g/hr.

TABLE 28-1.—BURN RATE WEIGHTED PROBABILITIES FOR CALCULATING WEIGHTED AVERAGE EMISSION RATES

Burn rate (kg/hr-dry)	Cumulative Probability (P)
0.00	0.000
0.05	0.002
0.10	0.007
0.15	0.012
0.20	0.016
0.25	0.021
0.30	0.028
0.35	0.033
0.40	0.041
0.45	0.054
0.50	0.065
0.55	0.086
0.60	0.100
0.65	0.121
0.70	0.150
0.75	0.185
0.80	0.220

TABLE 28-1.—BURN RATE WEIGHTED PROBABILITIES FOR CALCULATING WEIGHTED AVERAGE EMISSION RATES—Continued

Burn rate (kg/hr-dry)	Cumulative Probability (P)
0.85	0.254
0.90	0.300
0.95	0.328
1.00	0.380
1.05	0.407
1.10	0.460
1.15	0.490
1.20	0.550
1.25	0.572
1.30	0.620
1.35	0.654
1.40	0.695
1.45	0.722
1.50	0.750
1.55	0.779
1.60	0.800

TABLE 28-1.—BURN RATE WEIGHTED PROBABILITIES FOR CALCULATING WEIGHTED AVERAGE EMISSION RATES—Continued

Burn rate (kg/hr-dry)	Cumulative Probability (P)
1.65	0.825
1.70	0.840
1.75	0.857
1.80	0.875
1.85	0.882
1.90	0.895
1.95	0.906
2.00	0.912
2.05	0.920
2.10	0.925
2.15	0.932
2.20	0.936
2.25	0.940
2.30	0.945
2.35	0.951
2.40	0.956

TABLE 28-1.—BURN RATE WEIGHTED PROBABILITIES FOR CALCULATING WEIGHTED AVERAGE EMISSION RATES—Continued

Burn rate (kg/hr-dry)	Cumulative Probability (P)
2.45	0.959
2.50	0.964
2.55	0.968
2.60	0.972
2.65	0.975
2.70	0.977
2.75	0.979
2.80	0.980
2.85	0.981
2.90	0.982
2.95	0.984
3.00	0.984
3.05	0.985
3.10	0.986
3.15	0.987
3.20	0.987
3.25	0.988
3.30	0.988
3.35	0.989
3.40	0.989
3.45	0.989
3.50	0.990
3.55	0.991
3.60	0.991
3.65	0.992
3.70	0.992
3.75	0.992
3.80	0.993
3.85	0.994
3.90	0.994
3.95	0.994
4.00	0.994
4.05	0.995
4.10	0.995
4.15	0.995
4.20	0.995
4.25	0.995
4.30	0.996
4.35	0.996
4.40	0.996
4.45	0.996
4.50	0.996
4.55	0.996
4.60	0.996
4.65	0.996
4.70	0.996
4.75	0.997
4.80	0.997
4.85	0.997
4.90	0.997
4.95	0.997
>5.00	1.000

Method 28A—Measurement of Air To Fuel Ratio and Minimum Achievable Burn Rates For Wood-Fired Appliances

1. Applicability and Principle

1.1 Applicability. This method is applicable for the measurement of air to fuel ratios and minimum achievable burn rates, for determining whether a wood-fired appliance is an affected facility, as specified in 40 CFR 60.530.

1.2 Principle. A gas sample is extracted from a location in the stack of a wood-fired appliance while the appliance is operating at a prescribed set of conditions. The gas sample is analyzed for percent carbon dioxide (CO_2), percent oxygen (O_2), and percent carbon monoxide (CO). These stack gas components are measured for determining dry molecular weight of exhaust gas. Total moles of exhaust gas are determined stoichiometrically. Air to fuel ratio is determined by relating the mass of dry combustion air to the mass of dry fuel consumed.

2. Definitions

2.1 Burn Rate, Firebox, Secondary Air Supply, Test Facility, Test Fuel Charge, Test Fuel Crib, Test Fuel Loading Density, Test Fuel Piece, Test Run, Usable Firebox Volume, and Wood Heater. Same as Method 28, Sections 2.1 and 2.3 to 2.12.

2.2 Air to Fuel Ratio. Ratio of the mass of dry combustion air introduced into the firebox, to the mass of dry fuel consumed (grams of dry air per gram of dry wood burned).

3. Apparatus

3.1 Test Facility. Insulated Solid Pack Chimney, Platform Scale and Monitor, Room Temperature Monitor, Balance, Moisture Meter, Anemometer, Barometer, Draft Gauge, and Humidity Gauge. Same as Method 28, Sections 3.1, 3.2, and 3.4 to 3.10, respectively.

3.2 Sampling System. Probe, Condenser, Valve, Pump, Rate Meter, Flexible Bag, Pressure Gauge, and Vacuum Gauge. Same as Method 3, Sections 2.2.1 to 2.2.8, respectively. The sampling systems described in Method 5H, Sections 2.2.1, 2.2.2, and 2.2.3, may be used.

3.3 Analysis. Orsat analyzer, same as Method 3, Section 2.3; or instrumental analyzers, same as Method 5H, Sections 2.2.4 and 2.2.5, for CO_2 and CO analyzers, except use a CO analyzer with a range of 0 to 5 percent and use a CO_2 analyzer with a range of 0 to 5 percent. Use an O_2 analyzer capable of providing a measure of O_2 in the range of 0 to 25 percent by volume at least once every 10 minutes. Prepare cylinder gases for the three analyzers as described in Method 5H, Section 3.3.

4. Test Preparation

4.1 Test Facility, Wood Heater Appliance Installation, and Test Facility Conditions. Same as Method 28, Sections 4.1.1 and 4.1.2, respectively, with the exception that barometric dampers or other devices designed to introduce dilution air downstream of the firebox shall be sealed.

4.2 Wood Heater Air Supply Adjustments. This section describes how dampers are to be set or adjusted and air inlet ports closed or sealed during Method 28A tests. The specifications in this section are intended to ensure that affected facility determinations are made on the facility configurations that could reasonably be expected to be employed by the user. They are also intended to prevent circumvention of the standard through the addition of an air port that would often be blocked off in actual use. These specifications are based on the assumption that consumers will remove such items as dampers or other closure mechanism stops if this can be done readily with household tools; that consumers will block air inlet passages not visible during normal operation of the appliance using aluminum tape or parts generally available at retail stores; and that consumers will cap off any threaded or flanged air inlets. They also assume that air leakage around glass doors, sheet metal joints or through inlet grilles visible during normal operation of the appliance would not be further blocked or taped off by a consumer.

It is not the intention of this section to cause an appliance that is clearly designed, intended, and, in most normal installations, used as a fireplace to be converted into a wood heater for purposes of applicability testing. Such a fireplace would be identifiable by such features as large or multiple glass doors or panels that are not gasketed, relatively unrestricted air inlets intended, in large part, to limit smoking and fogging of glass surfaces, and other aesthetic features not normally included in wood heaters.

4.2.1 Adjustable Air Supply Mechanisms. Any commercially available flue damper, other adjustment mechanism or other air inlet port that is designed, intended or otherwise reasonably expected to be adjusted or closed by consumers, installers, or dealers and which could restrict air into the firebox shall be set so as to achieve minimum air into the firebox, i.e., closed off or set in the most closed position.

Flue dampers, mechanisms and air inlet ports which could reasonably be expected to be adjusted or closed would include:

(a) All internal or externally adjustable mechanisms (including adjustments that affect the tightness of door fittings) that are accessible either before and/or after installation.

(b) All mechanisms, other inlet ports, or inlet port stops that are identified in the owner's manual or in any dealer literature as being adjustable or alterable. For example, an inlet port that could be used to provide access to an outside air duct but which is identified as being closable through use of additional materials whether or not they are supplied with the facility.

(c) Any combustion air inlet port or commercially available flue damper or mechanism stop, which would readily lend itself to closure by consumers who are handy with household tools by the removal of parts or the addition of parts generally available at retail stores (e.g., addition of a pipe cap or plug, addition of a small metal plate to an inlet hole on a nondecorative sheet metal surface, or removal of riveted or screwed damper stops).

(d) Any flue damper, other adjustment mechanisms or other air inlet ports that are found and documented in several (e.g., a number sufficient to reasonably conclude that the practice is not unique or uncommon) actual installations as having been adjusted to a more closed position, or closed by consumers, installers, or dealers.

4.2.2 Air Supply Adjustments During Test. The test shall be performed with all air inlets identified under this section in the closed or most closed position or in the configuration which otherwise achieves the lowest air inlet (e.g., greatest blockage).

For the purposes of this section, air flow shall not be minimized beyond the point necessary to maintain combustion or beyond the point that forces smoke into the room.

Notwithstanding Section 4.2.1, any flue damper, adjustment mechanism or air inlet port (whether or not equipped with flue dampers or adjusting mechanisms) that is visible during normal operation of the appliance and which could not reasonably be closed further or blocked except through means that would significantly degrade the aesthetics of the facility (e.g., through use of duct tape) will not be closed further or blocked.

4.3 Test Fuel Properties and Test Fuel Charge Specifications. Same as Method 28, Sections 4.2 to 4.3, respectively.

4.4 Sampling System.

4.4.1 Sampling Location. Same as Method 5H, Section 5.1.2.

4.4.2 Sampling System Set Up. Set up the sampling equipment as described in Method 3, Section 3.2, or as in Method 3A, Section 7.

5. Procedures

5.1 Pretest Preparation. Same as Method 28, Sections 6.2.1 and 6.2.3 to 6.2.5.

5.2 Pretest Ignition. Same as Method 28, Section 6.3. Set the wood heater air supply settings to achieve a burn rate in Category 1 or the lowest achievable burn rate (see Section 4.2).

5.3 Test Run. Same as Method 28, Section 6.4. Begin sample collection at the start of the test run as defined in Method 28, Section 6.4.1. If Method 3 is used, collect a minimum of two bag samples simultaneously at a constant sampling rate for the duration of the test run. A minimum sample volume of 30 l per bag is recommended. If instrumental gas concentration measurement procedures are used, conduct the gas measurement system performance specifications checks as described in Method 5H, Sections 6.7, 6.8, and 6.9. The zero drift and calibration drift limits for all three analyzers shall be 0.2 percent O_2, CO_2, or CO, as applicable, or less. Other measurement system performance specifications are as defined in Method 5H, Section 4. Sample at a constant rate for the duration of the test run.

5.3.1 Data Recording. Record wood heater operational data, test facility temperature, sample train flow rate, and fuel weight data at 10-minute intervals.

5.3.2 Test Run Completion. Same as Method 28, Section 6.4.6.

5.4 Analysis Procedure.

5.4.1 Method 3 Integrated Bag Samples. Within 4 hours after the sample collection, analyze each bag sample for percent CO_2, O_2, and CO using an Orsat analyzer as described in Method 3, Sections 4.2.5 through 4.2.7.

5.4.2 Instrumental Analyzers. Average the percent CO_2, CO, and O_2 values for the test run.

5.5 Quality Control Procedures.

5.5.1 Data Validation. The following quality control procedure is suggested to provide a check on the quality of the data.

5.5.1.1 Calculate a fuel factor, F_o, using the following equation:

$$F_o = \left(\frac{20.9 - \%O_2}{\%CO_2}\right) \quad \text{Eq. 28a-4}$$

where:

$\%O_2$ Percent O_2 by volume (dry basis).
$\%CO_2$ Percent CO_2 by volume (dry basis).
20.9 Percent O_2 by volume in ambient air.

If CO is present in quantities measurable by this method, adjust the O_2 and CO_2 values before performing the calculation for F_o as follows:

$\%CO_2\ (adj) = \%CO_2 + \%CO$
$\%O_2\ (adj) = \%O_2 - 0.5\ \%CO$

where:

%CO = Percent CO by volume (dry basis).

5.5.1.2 Compare the calculated F_o factor with the expected F0 range for wood (1.000 - 1.120). Calculated F0 values beyond this acceptable range should be investigated before accepting the test results. For example, the strength of the solutions in the gas analyzer and the analyzing technique should be checked by sampling and analyzing a known concentration, such as air. If no detectable or correctable measurement error can be identified, the test should be repeated. Alternatively, determine a range of air to fuel ratio results that could include the correct value by using an F_o value of 1.05 and calculating a potential range of CO_2 and O_2 values. Acceptance of such results will be based on whether the calculated range includes the exemption limit and the judgment of the administrator.

5.5.1.3 Method 3 Analyses. Compare the results of the analyses of the two bag samples. If all the gas components (O_2, CO, and CO_2) values for the two analyses agree within 0.5 percent (e.g., 6.0 percent O_2 for bag 1 and 6.5 percent O_2 for bag 2, agree within 0.5 percent), the results of the bag analyses may be averaged for the calculations in Section 6. If the analysis results do not agree within 0.5 percent for each component, calculate the air-to-fuel ratio using both sets of analyses and report the results.

6. Calculations

Carry out calculations, retaining at least one extra decimal figure beyond that of the acquired data. Round off figure after the final calculation. Other forms of the equations may be used as long as they give equivalent results.

6.1 Nomenclature.

M_d = Dry molecular weight, g/g-mole(lb/lb-mole).
$\%CO_2$ = Percent CO_2 by volume (dry basis).
$\%O_2$ = Percent O_2 by volume (dry basis).
%CO = Percent CO by volume (dry basis).
$\%N_2$ = Percent N_2 by volume (dry basis).
N_T = Total gram-moles of dry exhaust gas per kg of wood burned (lb-moles/lb).
Y_{CO2} = Measured mole fraction of CO_2 (e.g., 10 percent CO_2 = .10 mole fraction), g/g-mole (lb/lb-mole).
Y_{CO} = Measured mole fraction of CO (e.g., 1 percent CO = .01 mole fraction), g/g-mole (lb/lb-mole).
Y_{HC} = Assumed mole fraction of HC (dry as CH_4)
= 0.0088 for catalytic wood heaters;
= 0.0132 for noncatalytic wood heaters.
= 0.0080 for pellet-fired wood heaters.
0.280 = Molecular weight of N_2 or CO, divided by 100.
0.320 = Molecular weight of O_2 divided by 100.
0.440 = Molecular weight of CO_2 divided by 100.
42.5 = Gram-moles of carbon in 1 kg of dry wood assuming 51 percent carbon by weight dry basis (.0425 lb/lb).
510 = Grams of carbon in exhaust gas per kg of wood burned.
1,000 = Grams in 1 kg.

6.2 Dry Molecular Weight. Use Equation 28a-1 to calculate the dry molecular weight of the stack gas.

$$M_d = 0.440(\%CO_2) + 0.320(\%O)_2) + 0.280(\%N_2 + \%CO) \quad \text{Eq. 28a-1}$$

Note: The above equation does not consider argon in air (about 0.9 percent, molecular weight of 37.7). A negative error of about 0.4 percent is introduced. The tester may opt to include argon in the analysis using procedures subject to approval of the Administrator.

6.3 Dry Moles of Exhaust Gas. Use Equation 28a-2 to calculate the total moles of dry exhaust gas produced per kilogram of dry wood burned.

$$N_T = \left(\frac{42.5}{(Y_{CO2} + Y_{CO} + Y_{HC})}\right) \quad \text{Eq. 28a-2}$$

6.4 Air to Fuel Ratio. Use Equation 28a-3 to calculate the air to fuel ratio on a dry mass basis.

$$A/f = \left(\frac{(N_T \times M_d)\ (510)}{(1000)}\right) \quad \text{Eq. 28a-3}$$

6.5 Burn Rate. Calculate the fuel burn rate as in Method 28, Section 8.3.

7. Bibliography

Same as Method 3, Section 7, and Method 5H, Section 7.

4. By adding a new Appendix I as follows:

Appendix I—Removable Label and Owner's Manual

1. Introduction

The purpose of this appendix is to provide guidance to the manufacturer for compliance with the temporary labeling and owner's manual provisions of Subpart AAA. Section 2 provides guidance for the content and presentation of information on the temporary labels. Section 3 provides guidance for the contents of the owner's manual.

2. Temporary Labels

2.1 General

Temporary labels shall be printed on 90 pound bond paper and shall measure 5 inches wide by 7 inches long. All labels shall be printed in black ink on one side of the label only. The type font that shall be used for all printing is helvetica. Specific instructions for drafting labels are provided below depending upon the compliance status of the wood heater model. Figures 1 through 7 illustrate the various label types that may apply. 2.2 Certified Wood Heaters

The design and content of certified wood heaters vary according to the following:

- Catalyst or noncatalyst,
- Measured or default thermal efficiency value, and
- Compliance with 1988 or 1990 emission limit.

There are five parts of a label. These include:

- Identification and compliance status,
- Emission value,
- Efficiency value,
- Heat output value, and
- Caveats.

Instructions for drafting each of these five parts are discussed below in terms of the three variables listed above. Figures 1 and 2 illustrate the variations in label design. Figure 1 is a temporary label for a hypothetical catalyst wood heater that meets the 1990 standard, has a certification test emission composite value of 3.5 g/h, and has a default efficiency of 72 percent. The label in Figure 2 is for a hypothetical noncatalyst wood heater with a certification test emission composite value of 7.8 g/h and a measured efficiency of 68 percent. It meets the 1988 but not the 1990 standard. All labels for wood heaters that have been certified and tested should conform as much as possible to the general layout, the type font and type size illustrated in Figures 1 and 2.

2.2.1 Identification and Compliance Status

The top 1.5 inches of the label should contain the following items (and location on the label):

- Manufacturer name (upper left hand corner,
- Model name/number (upper left hand corner,
- The words "U.S. ENVIRONMENTAL PROTECTION AGENCY" (centered at top and enclosed in a box with rounded edges),
- For catalytic wood heaters, in large bold print the words "CATALYST EQUIPPED" (centered below the words "U.S. ENVIRONMENTAL PROTECTION AGENCY"),
- Text indicating compliance status for catalytic wood heaters. For those catalytic wood heaters which comply with the 1988 emission limits, but not the 1990 emission limits, the words: "Meets EPA particulate matter (smoke) control requirements for catalytic wood heaters built on or after July 1, 1988, and before July 1, 1990." For those catalytic wood heaters which comply with the 1990 emission limits, the words: "Meets EPA particulate matter (smoke) control requirements for catalytic wood heaters built on or after July 1, 1990." Finally, for all catalytic wood heaters, the following text should be included: "See catalyst warranty. Illegal to operate when catalyst is not working. See owner's manual for operation and maintenance."
- Text indicating compliance status for noncatalytic wood heaters. For those noncatalytic wood heaters that comply with the 1988 emission limits but not the 1990 emission limits, the words: "Meets EPA particulate matter (smoke) control requirements for NONCATALYTIC wood heaters built on or after July 1, 1988, and before July I, 1990." For those noncatalytic wood heaters that comply with 1990 emission limits, the words: "Meets EPA particulate matter (smoke) control requirements for NONCATALYTIC wood heaters built on or after July 1, 1990."

2.2.2 Emission Value

Between 1.5 and 3.0 inches down from the top of the label is the part that graphically illustrates the particulate matter, or smoke, emission value. This part consists of the word "SMOKE" in large bold print and a 3.0 inch line with words "(grams per hour)" centered beneath the line. A blunt end arrow with a base (blunt end) that spans 2 g/hr shall be centered over the point on the emissions line that represents the composite emission value for the model as measured in the certification test.

For catalyst equipped wood heaters the 3.0 inch line shall be labeled "0" on the left end of the line (centered below the end) and "5.5" on the right end (centered below the end). To find where to center the large blunt end arrow, measure 0.55 inches from the left end for each g/h of the composite emission value. Thus, a 4 g/h value would be 2.2 inches from the left end. The base of the blunt end should always be 1.1 inches wide (2 g/hr). The words "This Model" should be centered above or within the blunt end arrow.

For noncatalyst equipped wood heaters, the 3.0 inch line should be labeled "0" on the left end of the line (centered below the end) and "8.5" on the right end of the line (centered below the end). To find where to center the large blunt end arrow, measure 0.35 inches from the left end for each g/h of the composite emission value. Thus, a 4 g/h value would be 1.4 inches from the left end. The base of the blunt end should always be 0.7 inches wide (2 g/h). The words "This Model" should be centered above or within the blunt end arrow.

2.2.3 Efficiency Value

Between 3.0 and 4.75 inches down from the top of the label is the part that illustrates overall thermal efficiency value. The efficiency value may either be a measured value or a calculated or default value as provided in § 60.536(i)(3) of the regulation. Regardless of how the efficiency is derived, the words "EFFICIENCY" shall be centered above a 4 inch line. The 4 inch line should be divided into 5 equal lengths (each 0.8 inches) and labeled "50%," "60%," * * * "100%" as indicated in Figures 1 and 2. As with the smoke line in 2.2.2, a blunt end arrow shall be centered over the point on the line where the efficiency value would be located. The base of the blunt end arrow shall be 0.48 inches wide (6 percentage points). To find where to center the blunt end arrow, measure 0.08 inches for each percentage point to the right of the nearest labeled value. For example, a value of 82 percent would be 0.16 inches to the right of the "80%" mark.

For default efficiency values, an asterisk shall follow the word "EFFICIENCY" as in Figure 1. The asterisk refers to a note in parentheses that shall say "Not tested for efficiency. Value indicated is for similar catalyst equipped (or noncatalytic, as appropriate) wood heaters."

For measured efficiency values measured with the method in Appendix J, the words "Tested Efficiency" shall be centered above the blunt end arrow as in Figure 2.

The last item required for this part is a sentence that says "Wood heaters with higher efficiencies cost less to operate."

2.2.4 Heat Output Value

Between 4.75 and 6.0 inches down from the top of the label is the heat output part. The words "HEAT OUTPUT" in large bold print are centered above the Heat Output range numbers in Btu/hr, as derived from the certification test. The words "Use this to choose the right size appliance for your needs. ASK DEALER FOR HELP" should follow the heat output range numbers as in Figures 1 and 2. (Note that "ASK DEALER FOR HELP" is a single line, centered in the label.) The low end of the burn rate range indicated on the label should reflect the low end of the burn rate range achievable by the wood heater as sold and not as tested in the laboratory (see § 60.536(i)(4)).

2.2.5 Caveats

In the lower 0.75 inch of the label, the following text shall be presented:

"This wood heater will achieve low smoke output and high efficiency only if properly operated and maintained. See owner's manual."

2.3 Coal-Only Heaters

For those heaters which meet the definition of "coal only heater" in § 60.531, the temporary label should contain the identical material (same layout and print font and size) as that illustrated in Figure 3, except that the hypothetical manufacturer and model name should be replaced with the appropriate actual names.

2.4 Small Manufacturer Exempted Wood Heaters

For those wood heaters exempted under § 60.530(d), the small manufacturer exemption, the temporary label should contain the identical material (same layout and print font and size) as that illustrated in Figure 4, except that the hypothetical manufacturer and model name should be replaced with the appropriate actual names.

2.5 Wood Heaters that Are Not Certified

For those wood heaters that do not meet applicable emission limits under § 60.532 and are not otherwise exempted, the temporary label should contain the identical material (same layout and print font and size) as those illustrated in Figures 5, 6, and 7, as appropriate. The hypothetical manufacturer and model names should be replaced with the appropriate actual names.

There are three kinds of wood heaters which fall into this category of "not certified." Each requires a separate label. If a wood heater is tested but fails to meet the applicable limits, the label in Figure 5 applies. Such a label should be printed on red rather than white paper. If a wood heater is tested and does meet the emission limit but is not subsequently certified, the label in Figure 6 applies. (An example would be a one-of-a-kind wood heater which is not part of a model line. Because of the costs of testing, this circumstance is not expected to arise often, if at all.) If a wood heater is not tested and is not certified, it should bear the label illustrated in Figure 7. As with Figure 5, this label should be printed on red paper.

3.0 Guidance for Preparation of Wood Heater Owner's Manuals

3.1 Introduction

Although the owner's manuals do not require premarket approval, EPA will monitor the contents to ensure that sufficient information is included to provide heater operation and maintenance information affecting emissions to consumers. The purpose of this section is to provide guidance to manufacturers in complying with the owner's manual provisions of § 60.536(1). A checklist of topics and illustrative language is provided as a guideline. Owner's manuals should be tailored to specific wood heater models, as appropriate.

3.2 Topics Required To Be Addressed in Owner's Manual

- Wood heater description and compliance status,
- Tamper warning,
- Catalyst information and warranty (if catalyst equipped),
- Fuel selection,
- Achieving and maintaining catalyst light-off (if catalyst equipped),
- Catalyst monitoring (if catalyst equipped),
- Troubleshooting catalytic equipped heaters (if catalyst equipped),
- Catalyst replacement (if catalyst equipped),
- Wood heater operation and maintenance, and
- Wood heater installation: achieving proper draft.

3.3 Sample Text/Descriptions

The following are example texts and/or further descriptions illustrating the topics identified above. Although the regulation requires manufacturers to address (where applicable) the ten topics identified above, the exact language is not specified. Manuals should be written specific to the model and design of the wood heater. The following guidance is composed of generic descriptions and texts. If manufacturers choose to use the language provided in the example, the portion in italics should be revised as appropriate. Any manufacturer electing to use the EPA example language shall be in compliance with owner's manual requirements provided that the particular language is printed in full with only such changes as are necessary to ensure accuracy. Example language is not provided for certain topics, since these areas are generally heater specific. For these topics, manufacturers should develop text that is specific to the operation and maintenance of their particular products.

3.3.1 Wood Heater Description and Compliance Status

Owner's Manuals shall include:

A. Manufacturer and model,

B. Compliance status (exempt, 1988 std., 1990 std., etc.), and

C. Heat output range (as indicated on temporary label).

Example Text covering A, B, and C above:

"This manual describes the installation and operation of the *Brand X, Model 0 catalytic equipped* wood heater. This heater meets the U.S. Environmental Protection Agency's emission limits for wood heaters sold *between July 1, 1990, and July 1, 1992.* Under specific test conditions this heater has been shown to deliver heat at rates ranging from *8,000* to *35,000* Btu/hr."

3.3.2 Tamper Warning

This consists of the following statement which must be included in the owner's manual for catalyst equipped units:

Example Text covering legal prohibition on tampering:

"This wood heater contains a catalytic combustor, which needs periodic inspection and replacement for proper operation. It is against the law to operate this wood heater in a manner inconsistent with operating instructions in this manual, or if the catalytic element is deactivated or removed."

3.3.3 Catalyst Information

Included with or supplied in the owner's and warranty manuals shall be the following information:

A. Catalyst manufacturer, model,

B. Catalyst warranty details, and

C. Instructions for warranty claims.

Example Text covering A, B, and C:

"The combustor supplied with this heater is a *Brand Z, Long Life Combustor.* Consult the catalytic combustor warranty also supplied with this wood heater. Warranty claims should be addressed to:

Stove or Catalyst Manufacturer _____
Address _____
Phone # _____

This section should also provide clear guidance on how to exercise the warranty (how to package for return shipment, etc.).

3.3.4 Fuel Selection

Owner's manuals shall include:

A. Instructions on acceptable fuels, and

B. Warning against inappropriate fuels.

Example Text covering A and B:

"This heater is designed to burn natural wood only. Higher efficiencies and lower emissions generally result when burning air dried seasoned hardwoods, as compared to softwoods or to green or freshly cut hardwoods.

DO NOT BURN:

- Treated Wood.
- Coal.
- Garbage.
- Cardboard.
- Solvents.
- Colored Paper.
- Trash.

Burning treated wood, garbage, solvents, colored paper or trash may result in release of toxic fumes and may poison or render ineffective the catalytic combustor.

Burning coal, cardboard, or loose paper can produce soot, or large flakes of char or fly ash that can coat the combustor, causing smoke spillage into the room, and rendering the combustor ineffective."

3.3.5 Achieving and Maintaining Catalyst Light-Off

Owner's manuals shall describe in detail proper procedures for:

A. Operation of catalyst bypass (stove specific),

B. Achieving catalyst light-off from a cold start, and

C. Achieving catalyst light-off when refueling.

No example text is supplied for describing operation of catalyst bypass mechanisms (Item A) since these are typically stove-specific. Manufacturers however must provide instructions specific to their model describing:

1. Bypass position during start-up,
2. Bypass position during normal operation, and
3. Bypass position during reloading.

Example Text for item B:

"The temperature in the stove and the gases entering the combustor must be raised to between *500°* to *700* °F for catalytic activity to be initiated. During the start-up of a cold stove, a medium to high firing rate must be maintained for about *20 minutes. This ensures that the stove, catalyst, and fuel are all stabilized at proper operating temperatures. Even though it is possible to have gas temperatures reach 600* °F within two to three minutes after a fire is started, if the fire is allowed to die down immediately it may go out or the combustor may stop working. Once the combustor starts working, heat generated in it by burning the smoke will keep it working."

Example Text for item C:

REFUELING:

"During the refueling and rekindling of a cool fire, or a fire that has burned down to the charcoal phase, operate the stove at a medium to high firing rate for about *10 minutes* to ensure that the catalyst reaches approximately *600°* F."

3.3.6 Catalyst Monitoring

Owner's manuals shall include:

A. Recommendation to visually inspect combustor at least three times during the heating season,

B. Discussion on expected combustor temperatures for monitor-equipped units, and

C. Suggested monitoring and inspection techniques.

Example Text covering A, B, and C:

"It is important to periodically monitor the operation of the catalytic combustor to ensure that it is functioning properly and to determine when it needs to be replaced. A non-functioning combustor will result in a loss of heating efficiency, and an increase in creosote and emissions. Following is a list of items that should be checked on a periodic basis.

• Combustors should be visually inspected at least three times during the heating season to determine if physical degradation has occurred. Actual removal of the combustor is not recommended unless more detailed inspection is warranted because of decreased performance. If any of these conditions exist, refer to Catalyst Troubleshooting section of this owner's manual.

• This catalytic heater is equipped with a temperature probe to monitor catalyst operation. Properly functioning combustors typically maintain temperatures in excess of *500* °F, and often reach temperatures in excess of *1,000* °F. If catalyst temperatures are not in excess of *500* °F, refer to Catalyst Troubleshooting section of this owner's manual.

• You can get an indication of whether the catalyst is working by comparing the amount of smoke leaving the chimney when the smoke is going through the combustor and catalyst light-off has been achieved, to the amount of smoke leaving the chimney when the smoke is not routed through the combustor (bypass mode).

Step 1—Light stove in accordance with instructions in *3.3.5.*

Step 2—With smoke routed through the catalyst, go outside and observe the emissions leaving the chimney.

Step 3—Engage the bypass mechanism and again observe the emissions leaving the chimney.

Significantly more smoke should be seen when the exhaust is not routed through the combustor (bypass mode). Be careful not to confuse smoke with steam from wet wood."

3.3.7 Catalyst Troubleshooting

The owner's manual should provide clear descriptions of symptoms and remedies to common combustor problems. It is recommended that photographs of catalyst peeling, plugging, thermal cracking, mechanical cracking, and masking be included in the manual to aid the consumer in identifying problems and to provide direction for corrective action.

3.3.8 Catalyst Replacement

The owner's manual should provide clear step-by-step instructions on how to remove and replace the catalytic combustor. The section should include diagrams and/or photographs.

3.3.9 Wood Heater Operation and Maintenance

Owner's manual shall include:

A. Recommendations about building and maintaining a fire,

B. Instruction on proper use of air controls,

C. Ash removal and disposal,

D. Instruction on gasket replacement, and

E. Warning against overfiring.

No example text is supplied for A, B, and D since these items are model specific. Manufacturers should provide detailed instructions on building and maintaining a fire including selection of fuel pieces, fuel quantity, and stacking arrangement. Manufacturers should also provide instruction on proper air settings (both primary and secondary) for attaining minimum and maximum heat outputs and any special instructions for operating thermostatic controls. Step-by-step instructions on inspection and replacement of gaskets should also be included. Manufacturers should provide diagrams and/or photographs to assist the consumer. Gasket type and size should be specified.

Example Text for item C:

"Whenever ashes get *3 to 4 inches* deep in your firebox or ash pan, and when the fire has burned down and cooled, remove excess ashes. Leave an ash bed approximately *1 inch* deep on the firebox bottom to help maintain a hot charcoal bed."

"Ashes should be placed in a metal container with a tight-fitting lid. The closed container of ashes should be placed on a noncombustible floor or on the ground, away from all combustible materials, pending final disposal. The ashes should be retained in the closed container until all cinders have thoroughly cooled."

Example Text covering item E:

"DO NOT OVERFIRE THIS HEATER"

"Attempts to achieve heat output rates that exceed heater design specifications can result in permanent damage to the heater and to the catalytic combustor if so equipped."

3.3.10 Wood Heater Installation: Achieving Proper Draft

Owner's manual shall include:

A. Importance of proper draft,

B. Conditions indicating inadequate draft, and

C. Conditions indicating excessive draft.

Example Text for Item A:

"Draft is the force which moves air from the appliance up through the chimney. The amount of draft in your chimney depends on the length of the chimney, local geography, nearby obstructions, and other factors. Too much draft may cause excessive temperatures in the appliance *and may damage the catalytic combustor.* Inadequate draft may cause backpuffing into the room and 'plugging' of the chimney *or the catalyst.*"

Example text for Item B:

"Inadequate draft will cause the appliance to leak smoke into the room through appliance and chimney connector joints."

Example text Item C:

"An uncontrollable burn or a glowing red stove part or chimney connector indicates excessive draft."

BILLING CODE 6560-50-M

NOTE: Labels not drawn to scale.

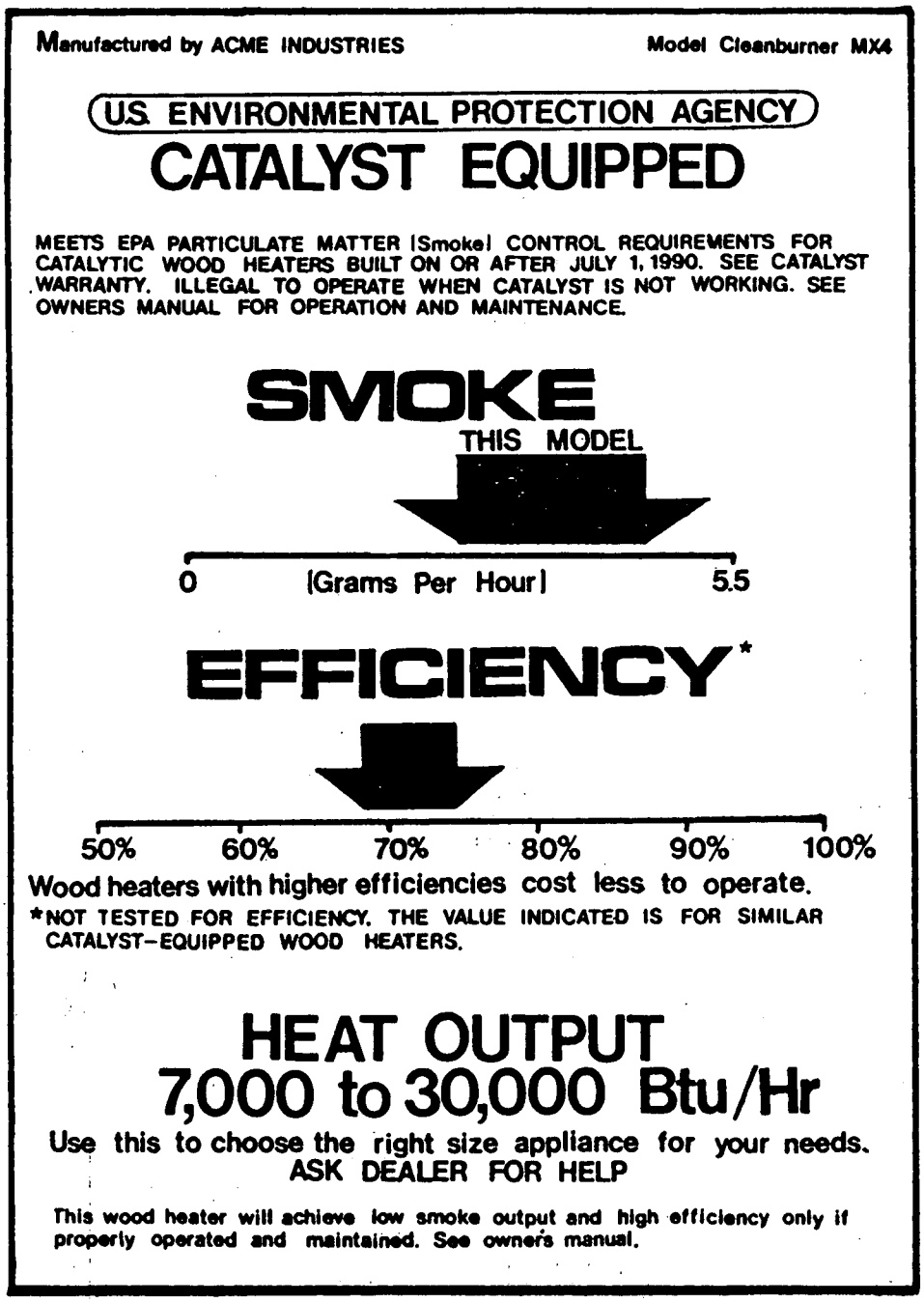

Figure 1. Temporary label for hypothetical wood heater: (1) catalytic, (2) estimated efficiency, and (3) meets 1990 standard.
Emissions: 3.5 g/hr
Efficiency: 72 percent

NOTE: Labels not drawn to scale.

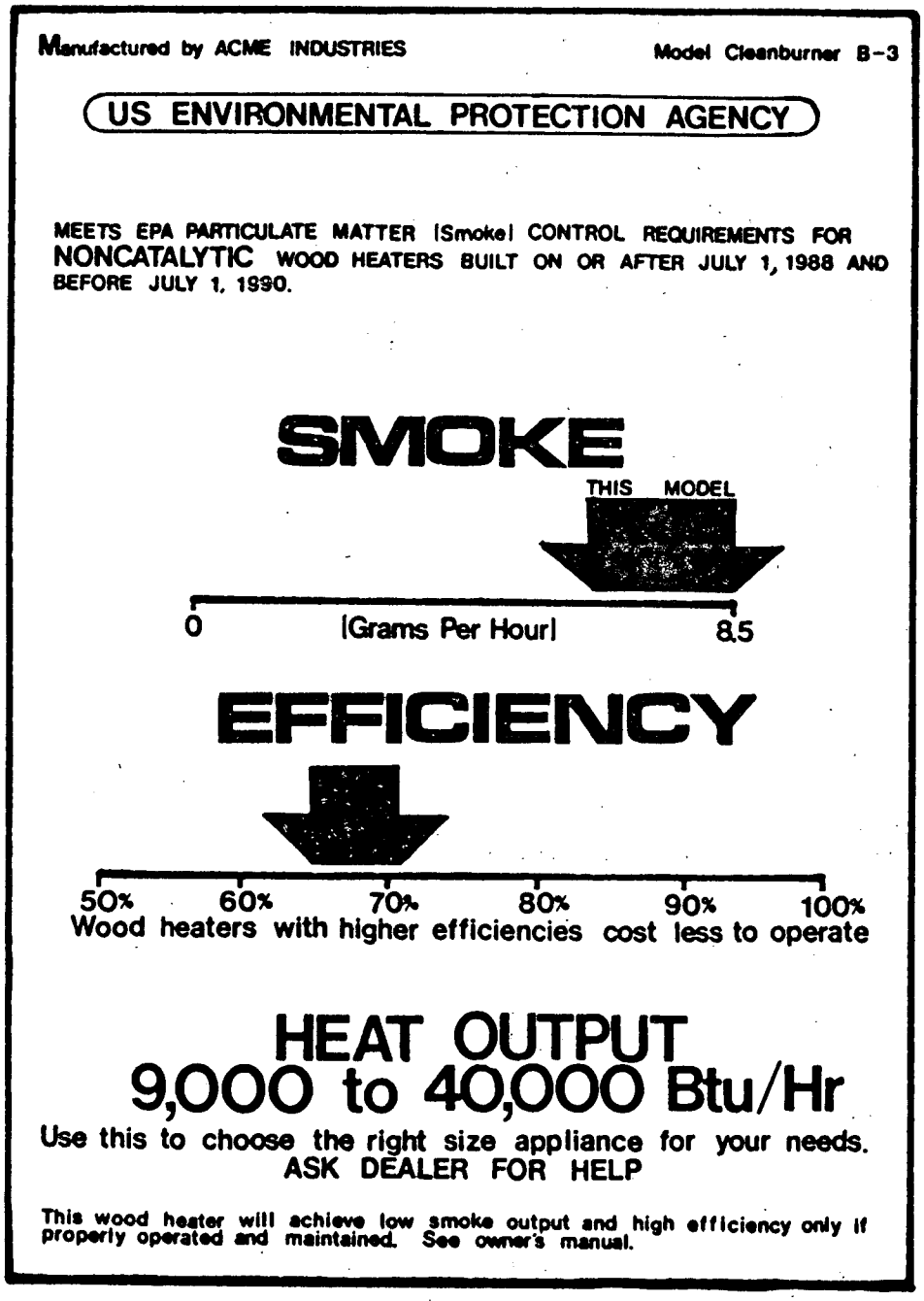

Figure 2. Temporary label for hypothetical wood heater: (1) noncatalytic, (2) measured efficiency, and (3) meets 1988 standard.
Emissions: 7.8 g/hr
Efficiency: 68 percent

NOTE: Labels not drawn to scale.

Manufactured by ACME INDUSTRIES Model Charburner

US ENVIRONMENTAL PROTECTION AGENCY

COAL-ONLY HEATER

This heater is only for burning coal. Use of any other solid fuel except for coal ignition purposes is a violation of Federal law.

THIS HEATER COMPLIES WITH FEDERAL REGULATION 40 CFR 60.

Figure 3. Temporary-label for hypothetical coal-only heater.

NOTE: Labels not drawn to scale.

Manufactured by ACME INDUSTRIES Model Small Guy 2000

US ENVIRONMENTAL PROTECTION AGENCY

EXEMPT FROM CERTIFICATION

This model was not tested because it is exempted under 40 CFR 60.530(d).

Approved for sale until July 1, 1991.

This heater complies with Federal regulation 40 CFR 60.

Figure 4. Temporary label for hypothetical wood heater. exempted under samll manufacturer exemption.

NOTE: Labels not drawn to scale.

Manufactured by ACME INDUSTRIES Model Bootleg 101

US ENVIRONMENTAL PROTECTION AGENCY

NOT CERTIFIED

Not certified. Not tested. Not approved for sale.
IT IS AGAINST THE LAW TO OPERATE THIS WOOD HEATER.

Figure 5. Temporary label for hypothetical wood heater that was not tested, not certified, and does not meet applicable standards.

NOTE: Labels not drawn to scale.

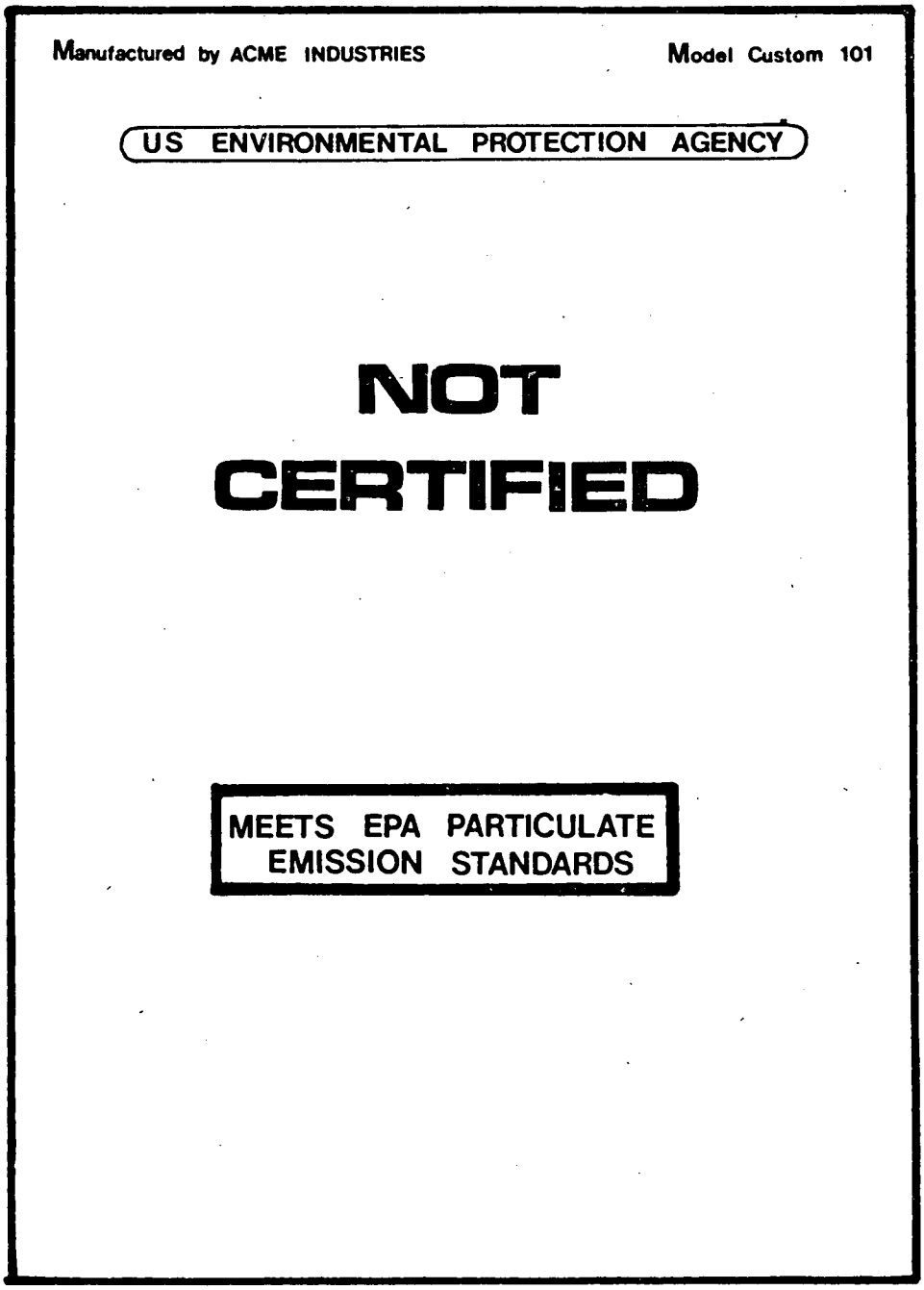

Figure 6. Temporary label for hypothetical wood heater that has been tested, meets applicable standards, but was not certified.

NOTE: Labels not drawn to scale.

Manufactured by ACME INDUSTRIES Model Flunkie 101

US ENVIRONMENTAL PROTECTION AGENCY

NOT CERTIFIED

Does not meet EPA particle emission standards.
IT IS AGAINST THE LAW TO OPERATE THIS WOOD HEATER

Figure 7. Temporary label for hypothetical wood heater that has been tested, but does not meet applicable standards and was not certified.

[FR Doc. 88-2071 Filed 2-25-88; 8:45 am]
BILLING CODE 6560-50-C

Federal Register

Friday
February 26, 1988

Part III

Department of Defense
General Services Administration
National Aeronautics and Space Administration

48 CFR Parts 1, 5, 19, 22, and 52
Federal Acquisition Regulation; Proposed Rules

DEPARTMENT OF DEFENSE

GENERAL SERVICES ADMINISTRATION

NATIONAL AERONAUTICS AND SPACE ADMINISTRATION

48 CFR Parts 19 and 52

Federal Acquisition Regulation (FAR); Small Business Subcontracting Plans for Contracts With Options

AGENCIES: Department of Defense (DoD), General Services Administration (GSA), and National Aeronautics and Space Administration (NASA).

ACTION: Proposed Rule.

SUMMARY: The Civilian Agency Acquisition Council and the Defense Acquisition Regulatory Council are considering changes to Federal Acquisition Regulation (FAR) 19.704 and the clause at 52.219-9 concerning small business subcontracting plans for contracts with options.

DATE: Comments should be submitted to the FAR Secretariat at the address shown below on or before April 26, 1988 to be considered in the formulation of a final rule.

ADDRESS: Interested parties may obtain copies of the proposed text from the FAR Secretariat and written comments should be submitted to: General Services Administration, FAR Secretariat (VRS), 18th & F Streets NW., Room 4041, Washington, DC 20405.

Please cite FAR Case 88-9 in all correspondence related to this issue.

FOR FURTHER INFORMATION CONTACT: Ms. Margaret A. Willis, FAR Secretariat, Telephone (202) 523-4755.

SUPPLEMENTARY INFORMATION:

A. Background

Current FAR coverage does not specifically address the treatment of contract options in the submission and evaluation of subcontracting plans under section 8(d) of the Small Business Act (as amended by sec. 211, Pub. L. 95-507, October 24, 1978, 15 U.S.C. 637(d)). The proposed rule will clarify FAR coverage by amending section 19.704(c) to specify that the subcontracting plans for contracts containing options that meet the required threshold for requiring such plans must separately address both the basic and option quantities. It will also amend the clause at 52.219-9, Small Business and Small Disadvantaged Business Subcontracting Plan, by inserting conforming language in the contract clause.

B. Regulatory Flexibility Act

The proposed revisions to FAR 19.704(c) and the clause at 52.219-9 will not have a significant economic impact on small business entities under the Regulatory Flexibility Act (5 U.S.C. 601, *et seq.*) because the revision only clarifies an existing requirement to make enforcement and administration of such plans easier for both the Government and those contractors who must submit such plans. Small businesses are not required to submit subcontract plans.

C. Paperwork Reduction Act

The Paperwork Reduction Act (Pub. L. 96-511) does not apply because the proposed rule does not impose any additional recordkeeping or information collection requirements or collection of information from offerors, contractors, or members of the public which require the approval of OMB under 44 U.S.C. 3501, *et seq.* It merely clarifies the manner in which such reports are to be prepared.

List of Subjects in 48 CFR Parts 19 and 52

Government procurement.

Dated: February 16, 1988.

Harry S. Rosinski,

Acting Director, Office of Federal Acquisition and Regulatory Policy.

Therefore, it is proposed that 48 CFR Parts 19 and 52 be amended as set forth below:

1. The authority citation for Parts 19 and 52 continues to read as follows:

Authority: 40 U.S.C. 486(c); U.S.C. Chapter 137; and 42 U.S.C. 2473(c).

PART 19—SMALL BUSINESS AND SMALL DISADVANTAGED BUSINESS CONCERNS

2. Section 19.704 is amended by adding paragraph (c) to read as follows:

19.704 Subcontracting plan requirements.

* * * * *

(c) For contracts containing options, the cumulative value of the basic contract and option is considered in determining whether a subcontract plan is necessary (see 19.705-2(a)). If a plan is necessary, the plan shall contain all the elements required by paragraph 19.704(a) and shall contain separate parts, one for the basic contract and one for the option.

PART 52—SOLICITATION PROVISIONS AND CONTRACT CLAUSES

3. Section 52.219-9 is amended by revising the introductory text; by removing in the title of the clause and in the *Alternate I* the date "(APR 1984)" and inserting in each place the date "(FEB 1988)"; and by revising the first sentence in paragraph (c) of the clause and the first sentence of paragraph (c) in the *Alternate I* to read as follows:

52.219-9 Small Business and Small Disadvantaged Business Subcontracting Plan.

As prescribed in 19.708(b), when contracting by negotiation insert the following clause in solicitations and contracts:

* * * * *

(c) The offeror, upon request by the Contracting Officer, shall submit and negotiate a subcontracting plan, where applicable, which addresses separately subcontracting with small business concerns and small disadvantaged business concerns with separate parts covering the basic contract and options (if any). The plan shall be included in and made a part of the resultant contract. * * *

* * * * *

Alternate I (FEB 1988). When contracting by sealed bidding rather than by negotiation, substitute the following paragraph (c) for paragraph (c) of the basic clause:

(c) The apparent low bidder, upon request by the Contracting Officer, shall submit a subcontracting plan, where applicable, which addresses separately subcontracting with small business concerns and small disadvantaged business concerns with separate parts covering the basic contract and options (if any). The plan shall be included in and made a part of the resultant contract. * * *

* * * * *

[FR Doc. 88-4080 Filed 2-25-88; 8:45 am]

BILLING CODE 6820-61-M

48 CFR Parts 1, 5, 22, and 52

Federal Acquisition Regulation (FAR); Labor Standards for Contracts Subject to the Service Contract Act of 1965

AGENCY: Department of Defense (DoD), General Services Administration (GSA), and National Aeronautics and Space Administration (NASA).

ACTION: Proposed rule; notice of availability and request for comments.

SUMMARY: The Department of Labor (DOL) has issued labor standard provisions applicable to contracts subject to the Service Contract Act of 1965. The Civilian Agency Acquisition Council and the Defense Acquisition Regulatory Council are proposing to revise Federal Acquisition Regulation (FAR) sections 1.105 and 5.207, Subpart 22.10, Service Contract Act of 1965, and to add eight clauses at 52.222-40 through

52.222–44 and 52.222–47 through 52.222–49.

DATE: Comments should be submitted to the FAR Secretariat at the address shown below on or before April 26, 1988 to be considered in the formulation of a final rule.

ADDRESS: Interested parties may obtain copies of the proposed text from the FAR Secretariat and written comments should be submitted to: General Services Administration, FAR Secretariat (VRS), 18th & F Streets NW., Room 4041, Washington, DC 20405.

Please cite FAR Case 88–10 in all correspondence related to this issue.

FOR FURTHER INFORMATION CONTACT: Margaret A. Willis, FAR Secretariat, Room 4041, GS Building, Washington, DC 20405.

SUPPLEMENTARY INFORMATION: This proposed rule is issued by the Department of Defense (DoD), General Services Administration (GSA), and the National Aeronautics and Space Administration (NASA) to provide guidance and to promote uniformity among procurement agencies.

A. Background

FAR Part 22.10 is amended to provide detailed instructions to contracting officers implementing the statutes and DOL regulations, which prescribe labor standards requirements for contracts to furnish services in the United States through the use of service employees.

B. Regulatory Flexibility Act

A full, final regulatory impact and regulatory flexibility analysis was prepared by DOL and a summary was published in the **Federal Register** on October 27, 1983 (48 FR 49758) when DOL published its regulation. The proposed revision to FAR 22.10 is an implementation of policy and regulation published by DOL and other agencies. This regulation will not have a significant economic impact on a substantial number of small entities because it merely codifies in the FAR (48 CFR), for the convenience of contractors and Government contracting personnel, regulations issued by DOL and codified in 29 CFR for which comments were requested and considered. Accordingly, the Regulatory Flexibility Act does not apply to this proposed rule and comments are not required. However, because of the importance to the Government and the public of this subject matter, comments are being requested.

C. Paperwork Reduction Act

The information collection requirements contained in this FAR revision were approved by the Office of Management and Budget (OMB) and have been assigned OMB control numbers 1215–0017 and 1215–0150.

List of Subjects in 48 CFR Parts 1, 5, 22, and 52

Government procurement.

Dated: February 19, 1988.

Harry S. Rosinski,

Acting Director, Office of Federal Acquisition and Regulatory Policy.

[FR Doc. 88–4081 Filed 2–25–88; 8:45 am]

BILLING CODE 6820–61–M

federal register

Friday
February 26, 1988

Part IV

Environmental Protection Agency

40 CFR Parts 795 and 799

Diethylene Glycol Butyl Ether and Diethylene Glycol Butyl Ether Acetate; Test Standards and Requirements; Final Rule

ENVIRONMENTAL PROTECTION AGENCY

40 CFR Parts 795 and 799

[OPTS-42085A; FRL-3333-4]

Diethy ene Glycol Butyl Ether and Diethylene Glycol Butyl Ether Acetate; Test Standards and Requirements

AGENCY: Environmental Protection Agency (EPA).

ACTION: Final rule.

SUMMARY: The EPA is issuing a final test rule, under section 4 of the Toxic Substances Control Act (TSCA), requiring manufacturers and processors of diethylene glycol butyl ether (DGBE, CAS No. 112-34-5) and manufacturers and processors of diethylene glycol butyl ether acetate (DGBA, CAS No. 124-17-4, also known as 2-(2-butoxyethoxy)ethyl acetate) to perform testing for health effects. The testing requirements for DGBE include subchronic toxicity with particular emphasis on reproductive, hematological, and kidney effects; neurotoxicity; developmental neurotoxicity (Tier II); and pharmacokinetics. EPA is also requiring dermal absorption testing of DGBA.

DATES: In accordance with 40 CFR 23.5, this rule shall be promulgated for purposes of judicial review at 1 p.m. eastern (daylight or standard as appropriate) time on March 11, 1988. This rule shall become effective on April 11, 1988.

FOR FURTHER INFORMATION CONTACT: Mike Stahl, Acting Director, TSCA Assistance Office (TS-799), Office of Toxic Substances, Rm. E-543, 401 M St., SW., Washington, DC 20460, (202) 554-1404.

SUPPLEMENTARY INFORMATION: EPA is issuing a final test rule under section 4(a) of TSCA to require health effects testing of DGBE and DGBA.

I. Introduction

A. Test Rule Development Under TSCA

Section 4 of TSCA (Pub. L. 94-469, 90 Stat. 2003 *et seq.*, 15 U.S.C. 2601 *et seq.*) contains authority for EPA to require the development of data relevant to assessing the risk to health and the environment posed by exposure to particular chemical substances or mixtures (chemicals).

Under section 4(a) of TSCA, EPA must requre testing of a chemical to develop data if the Administrator makes certain findings as described in TSCA under section 4(a)(1) (A) or (B). Detailed discussion of the statutory section 4 findings are provided in the Agency's first and second proposed test rules which were published in the **Federal Register** of July 18, 1980 (45 FR 48510) and June 5, 1981 (46 FR 30300).

B. Regulatory History

The Interagency Testing Committee (ITC) designated DGBA for priority testing consideration in its 13th Report, published in the **Federal Register** of December 14, 1983 (49 FR 55674). It was recommended by the ITC that DGBA be considered for health effects testing, including subchronic toxicity, reproductive effects, and toxicokinetics. EPA responded to the ITC designation by publishing, in the **Federal Register** of November 19, 1984 (49 FR 45606), an advance notice of proposed rulemaking (ANPR) for DGBA under section 4(a) of TSCA. This ANPR informed the public that EPA was expanding the scope of its rulemaking to include DGBE, because DGBA hydrolyzes to DGBE in blood. The ANPR presented a preliminary section 4(a)(1)(B) finding based upon the potential for exposure to DGBA and DGBE in consumer products; presented a preliminary section 4(a)(1)(A) finding for hematological effects; defined the testing EPA was considering proposing for both chemicals; and sought public comment on EPA's plan to propose a test rule for these chemicals.

In response to the ANPR, comments and studies were received from the Eastman Kodak Company, the Procter and Gamble Company, the Dow Chemical Company, and the Chemical Manufacturers Association (CMA). From its evaluation of this information, EPA issued a proposed rule, published in the **Federal Register** of August 4, 1986 (51 FR 27880), which proposed to require dermal absorption testing of DGBA and pharmacokinetics and health effects testing of DGBE to include subchronic toxicity with particular emphasis on reproductive, hematological, liver and kidney effects; developmental neurotoxicity; neurotoxicity; mutagenicity; and oncogenicity.

The proposed rule also sought comment on the advisability of using the rat as test species instead of the more sensitive rabbit, and the appropriate number of animals to use in some of the proposed tests.

The proposed test rule contained a response to the comments made subsequent to the ANPR publication, a review and evaluation of the submitted studies and other available data, a discussion of EPA's TSCA section 4(a) findings, and the proposed test standards to be used.

II. Response to Public Comments

EPA received written comments on the DGBE/DGBA proposed test rule from the Glycol Ethers Panel of CMA on October 3, 1986 (Ref. 1). Industry participation on this panel included Dow Chemical, U.S.A.; Eastman Kodak Company; ICI Americas, Inc.; Olin Corporation; Shell Chemical Company; Union Carbide Corporation; and Procter and Gamble Company. A public meeting was also requested by CMA and was held on October 24, 1986. The comments received by the Agency in response to the proposed rule for DGBE and DGBA are discussed below.

A. Exposure

1. *Exposure during manufacturing and processing.* CMA discounted EPA's concern that opportunities for dermal exposure exist in the sampling, repair, and transfer operations in manufacturing because the Shell Chemical Co., one of the manufacturers of DGBE, advises its employees in the glycol ether unit to wear gloves and protective clothing and to flush skin immediately should contact occur (Ref. 1). Although such safety and hygiene precautions are encouraged by Shell, EPA notes that there is no guarantee that employees will wear protective clothing when needed. Also, Shell is not the only manufacturer of DGBE and is not a manufacturer of DGBA, therefore it cannot be claimed that practices encouraged by Shell exist in plants of other manufacturers of DGBE and DGBA. Consequently, EPA still maintains that opportunities for dermal exposure occur during manufacturing. Likewise, EPA believes that opportunities for dermal exposure exist, despite a policy of protective equipment usage, in processing during such operations as repair of equipment, sampling the process stream, cleaning equipment, changing filters, spill cleanup, and handling, transfer, and packaging of products.

2. *Exposure from latex paint.* CMA commented that painting studies by the Eastman Kodak Company (Refs. 18 and 19) measured airborne concentrations of DGBA and DGBE from 80 and 49 minutes of painting respectively and found that potential exposure levels were so low that this provided an insufficient basis for a section 4(a)(1)(B) finding (Ref. 1). CMA also regarded as speculation EPA's conclusion that these inhalation exposures would be much greater when painting occurs for longer periods and when paint is used with higher DGBA and DGBE concentrations. Such speculation, CMA charged, was

not based on reasonable evidence of actual conditions likely to be experienced by consumers.

In 1986, an EPA contractor conducted a telephone survey of consumers to determine the frequency and duration of consumer use of latex paints (Ref. 20). The reported durations for a single painting session ranged from 1 to 14 hours and the reported frequency of painting ranged from 1 to 20 times per year. Using the results from this survey, EPA calculated dermal and inhalation exposure to DGBE and DGBA based on maximum weight percent of DGBE and DGBA in paint and the amount of paint EPA estimates is required to paint a small room (3 times the amount used by Kodak). EPA calculated that dermal and inhalation exposure to 2 percent DGBA in latex paint could be 2,124; 3,803; and 4,482 milligrams per year (mg/yr) for the 50th, 90th, and 95th percentile (Ref. 4). EPA calculated that dermal and inhalation exposure to 2 percent DGBE in latex paint could be 1,568; 2,796; and 3,275 mg/yr for the 50th, 90th, and 95th percentile (Ref. 55). EPA also estimates that 4,500 occupational painters and 15 to 20 million consumers are exposed to latex paint containing DGBA or DGBE each year (Refs. 3 and 31). On the basis of this estimate, EPA has concluded that there is or may be substantial exposure to DGBE and DGBA from latex paint, and believes the section 4(a)(1)(B) finding for consumer exposure to DGBE and DGBA in paint is appropriate.

3. *Exposure from cleaning products.* CMA commented that an exposure study based on 12 minutes of cleaning (Ref. 21) measured maximum likely consumer exposure to DGBE in cleaning products and that the resulting exposure level was so low that it formed an insufficient basis for a section 4(a)(1)(B) finding (Ref. 1). CMA also took exception to EPA's estimate of a janitor's likely exposure, claiming unrealistic and exaggerated assumptions were used. EPA does not consider its assumptions to be either unrealistic or exaggerated.

EPA has also estimated consumer exposure to DGBE in cleaning products. An EPA contractor conducted a telephone survey of consumers to determine the frequency and duration with which they performed 14 cleaning tasks in their households (Ref. 22). The reported durations for the cleaning tasks ranged from 10 to 120 minutes and the reported frequency of the tasks ranged from 2 to 365 times per year. Using the results from this survey, EPA calculated exposure based on absorption from inhalation and dermal routes and use of dilute and concentrated solutions. EPA calculated that exposure to DGBE in cleaning products could be 840; 8,550; and 19,492 mg/yr for the 50th, 90th, and 95th percentile (Ref. 4). EPA also estimates that 20 to 41 million consumers and 40,000 janitors could be exposed to DGBE in cleaning products (Refs. 31 and 3). On the basis of these estimates, EPA has concluded that there is or may be substantial exposure to DGBE, and believes the section 4(a)(1)(B) finding for consumer exposure to DGBE in cleaning products is appropriate.

4. *Exposure from other products.* CMA commented that human exposure to DGBE and DGBA in other consumer products should be considered inconsequential because DGBE and DGBA are generally used in low concentrations, their low vapor pressures will minimize inhalation potential, and only minimal dermal absorption should be expected. Although it is true that DGBE and DGBA are generally used in low concentrations, EPA has confidential business information concerning DGBE's presence at greater than 10 percent concentration in a product which is used undiluted and would provide the opportunity for dermal and inhalation exposure. In addition, EPA believes that the high production volumes of DGBE (69.7 million lb/yr) and DGBA (4.8 to 6 million lb/yr) and the large number and nature of consumer products which contain DGBE and which involve dermal contact in their use is a sufficient basis for a section 4(a)(1)(B) finding. These products include floor cleaners, floor wax strippers, floor finishes, spray cleaners, penetrating oils, metal cleaners, and paint removers.

B. Subchronic Toxicity

1. *Section 4(a)(1)(A) finding.* CMA commented that studies by Krotov, Keston, Smyth and Carpenter, and Procter and Gamble (Refs. 23 through 25 and 27) should not be used to support a concern for kidney, liver, and hematological effects (Ref. 1). EPA agrees with some of CMA's criticisms of these studies (Ref. 26) and is not using them to support a section 4(a)(1)(A) finding for kidney and liver effects. However, EPA is still making a section 4(a)(1)(A) finding for kidney and liver effects based on studies by the Eastman Kodak Company (Ref. 17) and the Dow Chemical Company (Ref. 28). The Eastman Kodak study (Ref. 17) also supports a concern for hematological effects as does the study by Procter and Gamble (Ref. 27), which, despite the low number of animals used, reported statistically significant blood effects at a dose of 30 mg/kg (Ref. 26).

2. *Adequacy of previous subchronic studies.* CMA commented (Ref. 1) that a substantial DGBE data base already exists in studies by Eastman Kodak (Ref. 17), the Dow Chemical Co. (Ref. 28), Procter and Gamble (Ref. 27), and the U.S. Navy (Ref. 29). CMA takes issue with EPA's position that each study taken individually is inadequate to address subchronic toxicity data needs and maintains that the data in the four studies should be considered as a whole. Although some of the studies do give consistent indications of the target organs affected by DGBE, EPA believes that the nature of the inadequacies of the studies, namely too few animals, too short a duration, or only one sex used, prevents EPA from accepting these studies either individually or in combination as satisfying the data needs for risk assessment of subchronic toxicity (Ref. 26). An adequate 90-day subchronic study is needed to look at all organs and tissues, not just anticipated target organs, and to give an indication of possible chronic toxicity. Also, a 90-day subchronic study is needed to determine a dose-response relationship and, if possible, a No Observed Adverse Effect Level (NOAEL) for risk assessment purposes.

3. *Liver function tests.* CMA commented that, given the large reserve capacity of this organ, liver function tests do not add any sensitivity to the histopathology normally performed in a subchronic toxicity test (Ref. 1). EPA agrees with CMA's comment and will not require the specialized liver function tests originally proposed.

4. *Urinalysis.* A comment was made at the public meeting (Ref. 30) that urinalysis should not be required because the Navy study (Ref. 29) measured *N*-acetyl-glucosaminadase (NAG), an enzyme in urine and a sensitive indicator of kidney toxicity, which indicated mild nephrotoxicity. EPA agrees that NAG may be an even more sensitive indicator than the urinalysis in the proposed test rule, but since the Navy study experienced so many animal deaths in the mid and upper doses, a dose-response based on NAG measurements can only be made for the first 6 weeks of the study. For this reason these NAG measurements cannot be used to indicate kidney effects for a full 90 days. However, EPA encourages, but does not require, industry to monitor this enzyme in the required subchronic study.

5. *Hematology and clinical chemistry evaluations.* CMA commented that the interim evaluation (on Day 30) of hematology and clinical chemistry in rats should not be required because it

involves orbital sinus puncture which results in secondary infections, thereby making a separate subgroup of animals necessary for these interim analyses (Ref. 1). EPA agrees that extra animals may be needed; and the investigator has the option under the guideline to use extra animals. The final rule continues to require hematology and clinical chemistry determinations to monitor what is happening to three apparent target system/organs: Blood, liver, and kidney.

6. *Hematology on additional days.* CMA commented that hematology on additional days (1, 2, 4, 6, 10, and 14) is unnecessary since it will only measure transient changes and that any permanent blood effects will be found by the hematology tests required by the subchronic test on days 0, 30, and 90 (Ref. 1). EPA agrees with CMA's comment and has deleted the requirement to do hematology on additional days. EPA is also not requiring clinical chemistry evaluations on day 2, because they will not add to the characterization of blood effects.

C. Reproductive Effects

1. *Adequacy of previous reproductive effects studies.* CMA commented that extensive data on the reproductive effects of DGBE exist in a one-generation study by Procter and Gamble (Ref. 32) and 4 subchronic studies (Refs. 17 and 27 through 29) which looked at the reproductive organs, making additional data for reproductive effects unnecessary (Ref. 1). EPA reviewed these studies and found that each of them had experimental limitations which compromised the interpretation of the findings (Ref. 33). Therefore EPA is requiring additional testing to evaluate the reproductive effects of DGBE.

2. *Evaluation of spermatogenic pattern.* CMA commented that insufficient guidance was provided concerning evaluation of the spermatogenic pattern (Ref. 1). EPA agrees with this comment and recommends that the spermatogenic cycle be evaluated for the presence and integrity of the 14 cell stages as identified by Clermont and Perey (1957) in § 799.1560(d)(2) of the final rule (Ref. 33).

3. *Spermatid and sperm counts, and sperm morphology.* CMA commented that the proposed testicular spermatid counts, epididymal sperm counts, and sperm morphology are not sensitive indicators of reproductive function unless large groups of animals are included or profound effects are caused, due to large inter-animal variation. Histologic examination and weight of the reproductive organs are claimed by CMA to be better indicators of reproductive toxicity (Ref. 1). EPA believes that a properly performed histopathologic evaluation is the most sensitive indicator for this class of compounds and is not requiring spermatid and sperm counts, or sperm morphology. At the same time, EPA wants to emphasize the importance of doing the histology according to the methodologies recommended in this rule (Ref. 33).

4. *Oocyte toxicity evaluation.* CMA commented that the method for determining total oocyte number, counting every 40th section, summing, and multiplying, was designed for the mouse ovary and may be excessive for the rat, the species used for this test. CMA stated that a qualitative description of oocyte histopathology should be sufficient (Ref. 1). EPA agrees with CMA's comment and is requiring the ovary to be serially sectioned with a sufficient number of sections examined to adequately detail oocyte and follicular morphology. The final strategy for sectioning and evaluation is left to the discretion of the investigator but must be described in detail in the study plan and final report. The nature and background level of lesions in control tissue should also be noted (Ref. 33). This modification is included in the final rule in § 799.1560(c)(1)(i)(B)(*7*)(*iv*).

5. *Female cyclicity test.* CMA commented that the monitoring of estrous cycling by vaginal cytology is an unreliable assay for accurately determining time of estrous and would require a large number of animals because of the insensitivity of such monitoring, thereby adding to the cost of the subchronic study (Ref. 1). EPA believes that CMA did not sufficiently document its claims for the Agency to drop this testing. EPA continues to believe that estrous monitoring is superior to reliance on only gross histopathology, which is not sufficiently sensitive to detect alterations that could have an impact upon estrous cyclicity. EPA believes the female cyclicity test should provide data on whether or not the animal is cycling and the cycle length (Ref. 33).

6. *Satellite fertility study.* A comment was made at the public meeting (Ref. 30) that the proposed satellite fertility study is not a satellite study but a full separate study because the dosing regimen calls for mating treated males and females with their untreated counterparts. EPA agrees with this comment and has modified the study design so that control animals may be cohabited and high dose males and females may be cohabited. This test as modified would require the addition of 20 extra males and 40 extra females to the subchronic study.

D. Neurotoxicity

1. *Section 4(a)(1)(A) finding.* CMA commented that studies by Krotov et al. (Ref. 23) and Borriston Laboratories (Ref. 34) do not support a concern for neurotoxicity of DGBE. CMA also commented that studies by Dodd et al. (Ref. 35) and Bushy Run Research Center (Ref. 36) do not support a concern for neurotoxicity of ethylene glycol monobutyl ether (EGBE), nor, by analogy, a concern for DGBE (Ref. 1). EPA agrees with CMA's criticisms of these studies and is not using them to support a section 4(a)(1)(A) finding for neurotoxicity (Ref. 37). However, EPA is requiring neurotoxicity testing of DGBE on the basis of the section 4(a)(1)(B) finding.

2. *Absence of neurotoxic effects in previous studies.* CMA (Ref. 1) and industry representatives (Ref. 30) commented that the 8-day study by Borriston Laboratories (Ref. 34), the 6-week study by Eastman Kodak Company (Ref. 17), and the 90-day subchronic study by the U.S. Navy (Ref. 29) showed no neurotoxic effects and therefore EPA should not ask for additional neurotoxicity testing. EPA reevaluated these studies and found them inadequate to detect neurotoxicity because none assessed the animals by the procedures in the proposed Functional Observational Battery or Motor Activity tests. In addition, the Borriston study did no neuropathology, and the neuropathology in the Eastman Kodak and U.S. Navy studies was inadequate to reasonably determine or predict neurotoxicity because vascular perfusion was not used to fix nervous tissue and designated sections of the brain, spinal cord, and specified nerves were not examined (Ref. 37). In short, these studies did not look at the proper endpoints to detect neurotoxicity.

3. *Histopathological vs. behavioral evidence of neurotoxicity.* Industry representatives commented that the appropriate indicator of cumulative neurotoxic damage that is at least somewhat persistent is a lesion, not a behavioral effect. They also indicated that traditional methods of gross and microscopic pathology are more recognized and interpretable than the motor activity test (Ref. 30).

The industry representatives did not submit any data to EPA to support their contention that a persistent nervous system effect must have a basis in observable pathology. To the contrary, the National Academy of Sciences supports the consideration of both

behavior and pathology in evaluating neurotoxic effects, the EPA likewise has adopted this policy. Also, the motor activity test is a standard method used in drug testing to measure unlearned behavior, and is recommended by the National Academy of Sciences (Refs. 56, 57, and 58).

4. *Functional observational battery.* a. Concerning definitions in § 798.6050(b)(1), CMA commented that the definition of neurotoxicity was too broad and nonspecific (Ref. 1). EPA agrees with the comment and has modified the definition in the final rule under § 799.1560(c)(2)(i)(A)(*2*)(*i*).

b. Concerning test procedures in § 798.6050(d)(1)(iii), CMA commented that only male rats should be used in the present screening tests because female behavior tends to be more variable due to the short (5-day) estrous cycle (Ref. 1). EPA disagrees because it is unlikely that estrous changes could contribute significantly to variability in the measurement of the items comprising the functional observational battery (FOB). Also, substantial sex-related potency differences may exist. (Ref. 49).

c. Concerning test procedures in § 798.6050(d)(2), CMA commented that the requirement to test all animals would be burdensome and that the guideline should allow deviations from the procedure provided explanations are given (Ref. 1). EPA agrees with this comment and has modified the guideline so that the only animals that must be tested are those designated to be followed throughout the entire experiment (Ref. 49). This modification has been published in the final rule for Revision of TSCA Test Guidelines (52 FR 19056; May 20, 1987).

d. Concerning test procedures in § 798.6050(d)(4)(i), CMA commented that the requirement to induce life-threatening toxicity should be eliminated because it contradicts the ethics of science which seek to reduce animal suffering to a minimum. The requirement that the largest dose produce life-threatening toxicity is the second, and less preferred, of two criteria to minimize the frequency of false negative results. The first and preferred criterion is that the dosage produce clear behavioral effects (Ref. 48). Although EPA agrees that all scientists must reduce animal suffering to a minimum, if the highest dose fails to produce clear behavioral effects, a dose to induce life-threatening toxicity should be established.

e. Section 798.6050(d)(4)(ii), which is the identical paragraph to § 798.6200(d)(4)(ii) and § 798.6400(d)(4)(ii) which EPA modified in response to comments described in Units II.D.5.i. and 6.f., has also been modified in the final test rule in § 799.1560(c)(2)(i)(A)(*2*)(*ii*).

f. Concerning test procedures in § 798.6050(d)(8)(i), CMA commented that it is unlikely that the same person could do all of the observation for the entire duration of the study and be blind as to the treatments (Ref. 1). EPA agrees with this comment and has modified the guideline to permit other trained observers, who are blind to the animals' treatment, to evaluate the animals if it is not possible to use the same observer and if inter-observer reliability can be demonstrated (Ref. 49). This modification has been published in the final rule for Revision of TSCA Test Guidelines (52 FR 19056; May 20, 1987).

g. Also concerning § 798.6050(d)(8)(i), CMA commented that the frequency of observation is too specific, cannot be done at 1 and 6 hours due to inadequate time for observation, and should not be done because learned behavior would confound results with animals refusing to respond. CMA suggested that observations be made frequently enough to detect behavioral changes indicating neurotoxicity, and that the FOB be conducted after the observation of significant behavioral changes and frequently enough to detect progress in the toxic state. EPA believes the particular time selected for evaluating dosed animals cannot be prescribed *a priori* but should be selected so as to document the time course of effectiveness of an agent. Therefore, the time intervals specified in the FOB guidelines should be considered as recommendations. The types of evaluations specified in the FOB can, however, be easily carried out at both 1 and 6 hours post-dosing when testing is staggered. Changes in a behavioral measure may or may not occur over time when the battery is repeated. However, even if changes do occur, it would be unlikely that animals would "refuse to respond," due to learning, on any of the measures that comprise the FOB. EPA does not agree that the FOB should be applied only after observation of significant behavioral changes, since the intent of its application is precisely to standardize those initial observations (Ref. 48).

h. Concerning test procedures in § 798.6050(d)(8)(ii)(D), CMA commented that the test for grip strength should not be done repeatedly during the course of the study because learning will occur which will increase the variability of all the subsequent determinations (Ref. 1). EPA does not agree. While learning may indeed take place whenever any behavioral test is repeated, it should be an ongoing process with every repetition. Contrary to CMA's comment, it is equally likely that learning could decrease between-subject variability rather than increase it. In any event, there is no evidence in the extensive series of experiments published by Pryor et al. (Ref. 50) that grip-strength scores changed in one direction or another with repeated testing (Ref. 48).

i. Concerning test procedures in § 798.6050(d)(8)(ii)(E), CMA commented that the required assessment of sensory function (vision, audition, pain perception) should be deleted because visual placing tests for albino rodents are insufficiently conclusive to warrant the time and effort to perform the test (Ref. 1). EPA does not agree and believes that some effort needs to be made to evaluate the visual integrity of toxicant-treated animals. CMA's experience may be related to the particular rat strain used. EPA, however, deleted the phrase "* * * including the visual placing * * * pinch", and has left the evaluation of sensory integrity, including visual integrity "or other appropriate test of visual function" to the discretion and scientific judgment of laboratories (Ref. 48). This modification is included in the final rule in § 799.1560(c)(2)(i)(A)(*2*)(*iv*).

j. Concerning data reporting and evaluation in § 798.6050(e)(1)(ii), CMA commented that it is unreasonable to require all aspects of the experimental protocol, including personnel, to be the same before historic data may be used for historical positive control studies (Ref. 1). EPA does not consider this requirement too restrictive for this test. It is also essential that any technician be thoroughly skilled in the assays that he/she is assigned to conduct, and that evidence be in hand of his/her skill (Ref. 48).

5. *Motor activity test.* a. CMA commented that the guideline for the motor activity test appears to require the use of 168, 644, or 1,792 animals depending on the coefficient of variation calculated from a "t" test table. If trend analysis is used instead, these numbers could be reduced and would be approximately equal to 140, 518, and 1,414 respectively. EPA does not agree. The coefficients used by the commenter are excessively large, probably due to that fact that open-field testing results may be extremely variable even under the best of conditions. Use of automated devices of measuring motor activity typically yields coefficients of variation of approximately 20 to 30 percent (Ref. 49), see, for example, Buelke-Sam et al., *Neurobehavioral Toxicology and Teratology*. 7:591–624, 1985, Table 21 (Ref. 51).

b. Industry representatives commented that the motor activity test should not measure performance to asymptote because a long observation period per animal would be necessary. In addition, they contend that true asymptote does not exist because motor activity in rodents fluctuates with diurnal cycle, and it is unnecessary to go to asymptote because the vast majority of chemicals, if they have an effect on motor activity, show it in the first couple of minutes (Ref. 30). EPA does not agree. Asymptote is typically reached in 25 minutes to 1 hour, with lethargic animals reaching asymptote even more quickly and at a lower level (Ref. 38). Because asymptote is reached quickly, it is not affected by diurnal cycle. Also, the diurnal cycle would not be a factor because of the controls. It is important to measure to asymptote because, if the animals are lethargic, handling will stimulate them to act like controls. Measuring only the short period after returning animals to their cages would be measuring only aroused or stimulated behavior (Ref. 38).

c. Concerning the principle of the test method in § 798.6200(c), CMA commented that this paragraph implies that doses associated with toxic effects not originating in the nervous system must be used in the motor activity study (Ref. 1). This inference is incorrect. The guideline explains that the results of motor activity assessments should be compared with other available toxicity data. Generally speaking, additional data will likely be available on the toxicity of a particular compound, and it is these data that should be used in comparing the results of the motor activity dose-response determinations. To avoid confusion, however, the sentence "The exposure levels at which * * *" has been modified to read "Where possible, the exposure levels at which * * *" (Ref. 48). This modification is included in the final rule in § 799.1560(c)(2)(i)(B)(*2*)(*i*).

d. Concerning test procedures in § 798.6200(d)(1)(iii), CMA commented that only male rats should be used in the motor-activity test because female behavior tends to be more variable because of the short (5-day) estrous cycle (Ref. 1). EPA disagrees and requires that females as well as males be tested because substantial sex-related potency differences may exist (Ref. 48).

e. Concerning test procedures in § 798.6200(d)(2), CMA commented that Dow derived coefficients of variation ranging from 35 to 85 percent with mice in the open field instead of the coefficient of variation of 25 percent on which EPA based its estimate of 10 animals per group as being necessary to detect a 40 percent change with 90 percent power at the 5 percent level (Ref. 1). EPA responded to this comment under Unit II.D.5.a.

f. Concerning test procedures in § 798.6200(d)(3)(i), CMA commented that the appropriate control group is the vehicle control group. CMA considered the requirement to have an untreated control group and a vehicle control group, when the vehicle's toxic properties are not known, to be a poor use of test animals (Ref. 1). EPA does not agree. For many of the commonly used vehicles, there is generally no effect seen on motor activity, and a simple demonstration of this fact is sufficient. However, many other vehicles may produce noticeable effects on motor activity that could either exaggerate or mask treatment effects and therefore confound interpretation of results. In addition, inclusion of data from an untreated control group permits further evaluation of the stability of the motor activity assay over time (Ref. 48).

g. Concerning test procedures in § 798.6200(d)(3)(ii) which requires positive control data to demonstrate the sensitivity and reliability of the activity measuring device and testing procedure, CMA commented that reliability (test-retest reliability and coefficient of variation) must be documented before the study of the test substance begins to determine the appropriate number of animals per group. Also, CMA continues, some index of reliability should be calculated in the control group rather than in a positive control group receiving a reference substance. CMA recommended that the words "and reliability" be deleted since a reliability study is implicit in § 798.6200(d)(2) on the "number of animals." CMA also recommended replacing the word "demonstrate" with "document" (Ref. 1). EPA agrees with these recommendations and a modification is included in the final rule in § 799.1560(c)(2)(i)(B)(*2*)(*ii*).

h. Concerning test procedures in § 798.6200(d)(4)(i)(B), CMA commented that the requirement to induce life-threatening toxicity should be eliminated because it is in contradiction with the ethics of science which seek to reduce animal suffering to a minimum (Ref. 1). EPA addressed this comment under Unit II.D.4.d.

i. Concerning test procedures in § 798.6200(d)(4)(ii), CMA commented that this sub-paragraph on data from lower doses seemed unnecessary and should be deleted (Ref. 1). EPA addressed this comment under Unit II.D.6.f. The standard is accordingly modified in the final test rule in § 799.1560(c)(2)(i)(B)(*2*)(*iii*).

j. Concerning test procedures in § 798.6200(d)(8)(i), CMA commented that the requirement for the test session to be long enough for motor activity to approach asymptotic levels should be deleted because at such low levels of activity, no detectable difference may remain between treatment and control groups (Ref. 1). CMA cited a paper by Romano and Landauer (Ref. 52) to document its point. EPA believes there is some misunderstanding regarding this section. In the Romano and Landauer experiment, an effect of the agent would be apparent if a dose-response curve for the entire session had been plotted. Inclusion of within-session activity data was specified to guard against the possibility that a treatment might rearrange the temporal pattern of motor activity without affecting its overall level. Adequacy of the length of testing can, however, be specified only for control conditions, and therefore the sentence "The test session shall be long enough * * *" is modified to conclude with "* * * of the session control animals" (Ref. 48). This modification is included in the final rule in § 799.1560(c)(2)(i)(B)(*2*)(*v*).

k. Concerning test procedures in § 798.6200(d)(8)(iii), CMA commented that the 4-day tolerance associated with the test days (i.e. 30±2, 60±2 and 90±2 days) is needlessly restrictive and should be deleted (Ref. 1). EPA agrees and has changed the time tolerance to ±4 days (Ref. 48) which is included as a modification in the final rule in § 799.1560(c)(2)(i)(B)(*2*)(*vi*).

l. Concerning data evaluation in § 798.6200(e)(3), CMA commented that the guideline should not require comparing each treatment group but should instead use the slope of the dose-effect relationship (Ref. 1). EPA does not agree. Under appropriate conditions, calculation of the slope of the dose-effect curve could be preferred. However, given the limited number of exposure levels (3) specified in the guideline, and the fact that certain agents may produce bitonic effects on motor activity (i.e. a response in two directions, an increase followed by a decrease in activity or vice versa), it is better to compare each treatment group against the control group (Ref. 48).

6. *Neuropathology.* a. Concerning § 798.6400, CMA commented that guidance should be provided concerning when the specific neuropathology should be done and whether it should be done in animals with lesions in other organs but no clinical neurologic signs

or light microscopic lesions in the nervous system (Ref. 1). According to § 798.6400(c), tissues are to be examined under the light microscope for morphologic changes starting with the highest dosage level and continuing until a no effect level is determined. This requirement is not meant to be limited by the presence of lesions in other organs, because lesions in other organ systems do not preclude primary effects on the central or peripheral nervous system. EPA acknowledges, however, that the occurrence of toxic effects in other organ systems in addition to the nervous system would require further analysis to determine whether the nervous system effects were secondary to toxicant-induced changes in other organ systems (Ref. 48).

b. Concerning the principle of the test method in § 798.6400(c), CMA questioned the level of examination necessary to determine a No Observed Effect Level (NOEL). CMA also commented that electron microscopy should not be considered superior to light microscopy for establishing NOELs, because sample size limitations of electron microscopy reduce the likelihood of finding a rare lesion, especially at the NOEL (Ref. 1). According to § 798.6400(d)(8)(iv)(E)(*4*), light microscopic evaluations are intended to identify the principal sites of neuropathology and to determine the NOEL. Electron microscopy is then intended to confirm the NOEL at that site and dose level (Ref. 48). If a lesion is found at that dosage level then the next lower treatment group shall be evaluated by electron microscopy until no significant lesion is found.

c. Concerning test procedures in § 798.6400(d)(1)(iii), CMA commented that only male rats should be used in the neuropathology test because there are no known neurotoxicants which affect one sex only (Ref. 1). EPA does not agree because substantial sex-related potency differences may exist (Ref. 48) and is requiring that females as well as males be tested.

d. Concerning test procedures in § 798.6400(d)(3)(i), CMA commented that the control group should be sham-treated rather than untreated (Ref. 1). EPA does not agree because the inclusion of an untreated control group is an important aspect of demonstrating the replicability of a given procedure. The additional inclusion of sham-treated controls, where no vehicle is used, is not precluded by the guidelines (Ref. 48).

e. Concerning test procedures in § 798.6400(d)(4)(i), CMA commented that the term "life-threatening toxicity" is ill-defined and that a better criterion for the highest dose would be the production of toxic effects in other organ systems (Ref. 1). EPA disagrees, believing that the term "life-threatening toxicity" is self-explanatory and that, in the absence of clear behavioral effects (the preferred criterion for the highest dose), it is superior to toxicity in other organs as a criterion for highest dose because effects on other organ systems do not preclude primary effects on the Central Nervous System (CNS) or Peripheral Nervous System (PNS). EPA acknowledges, however, that the occurrence of toxic effects on other organ systems in addition to the nervous system would require further analysis to determine whether the nervous system effects were secondary to toxicant induced changes in other organ systems (Ref. 48).

f. Concerning test procedures in § 798.6400(d)(4)(ii), CMA commented that graded dose-dependent effects cannot be shown at the two lower doses because a NOEL would not be established (Ref. 1). EPA's original intent was to avoid having only one positive dose level, even if that meant having more than three groups. Because this was inconsistent with other guidelines, EPA now wants only to ensure that at least two doses, including the highest dose, show effects for any agent that appears to be positive (Ref. 67). The standard is accordingly modified in the final test rule in § 799.1560(c)(2)(i)(C)(*2*)(*i*).

g. Concerning test procedures in § 798.6400(d)(8)(i), CMA commented that a routine neurological examination should not be required on a daily basis (Ref. 1). EPA believes that CMA misunderstood this section because it does not require detailed neurological examination on a daily basis. The requirement is solely to observe the animals for any possible abnormalities that may be associated with chemical exposure (Ref. 48).

h. Concerning test procedures in § 798.6400(d)(8)(ii), CMA commented that the test methods should only be considered a guide and not mandated because other methods exist which are as good or better (Ref. 1). EPA is required under TSCA to provide test standards to ensure the development of adequate and reliable data. EPA believes that the test procedures specified are appropriate and provide standardized screening procedures for neuropathological evaluation of potential neurotoxicants (Ref. 48). Also, industry was invited during the comment period to provide alternative procedures for EPA's consideration. The importance of this neuropathological evaluation in assessing neurotoxic potential is well-established in Spencer et al. (Ref. 53) and Norton (Ref. 54).

i. Concerning test procedures in § 798.6400(d)(8)(ii)(C), CMA commented that weight and subtle color changes cannot be evaluated on perfused tissues and that the guidelines should allow for storage of tissues in any suitable container in addition to fixative-filled bags as already prescribed (Ref. 1). EPA agrees. As the commenters have pointed out, to detect reliable structural changes in CNS tissues, special processing (*in situ* perfusion) is required which may alter the appearance of other tissues at necropsy. So that adequate information can be obtained from both routine pathological analysis and neuropathological examination, additional animals should be prepared for neuropathological analysis using *in situ* perfusion to fix the neural tissue (Ref. 49). EPA also agrees that the tissues can be stored in suitable containers other than fixative-filled bags.

j. Concerning test procedures in § 798.6400(d)(8)(ii)(D), CMA commented that examination of the sural nerve should not be required because of its small size (Ref. 1). EPA does not agree. The sural nerve represents a critical site of the neuraxis because of its primary sensory modality. Plastic embedded sections of the sural nerve are recommended in § 799.1560(c)(2)(i)(C)(*2*)(*iii*) because their small size does not allow adequate histological evaluation when embedded in paraffin (Ref. 48). A method for plastic embedding is described by Spencer et al. (Ref. 53).

k. Concerning test procedures in § 798.6400(d)(8)(iv)(C), CMA commented that the tissue block is often not large enough to record all the information required in the guideline; therefore, more latitude should be allowed to choose a procedure which would provide unequivocal identification (Ref. 1). EPA considers this recommendation to be appropriate, and therefore the sentence "All tissue blocks * * * embedded" is amended to read "All tissue blocks shall be labeled to provide unequivocal identification" (Ref. 48). The standard is modified in the final rule in § 799.1560(c)(2)(i)(C)(*2*)(*iii*).

l. Concerning test procedures in § 798.6400(d)(8)(iv)(E), CMA commented that the proposed neuropathological examination should not require increasingly greater sampling if negative effects are found in lower screening levels (Ref. 1). CMA apparently misunderstood the logical progression of the neuropathology guideline. At any given level of evaluation, progression to

the next level is triggered only by a positive result. However, if lesions are identified, special stains or electron microscopy of the lesion itself are required (Ref. 48).

m. Concerning test procedures in § 798.6400(d)(8)(iv)(E)(*2*), CMA commented that there is not rationale for requiring teasing of peripheral nerve fibers which appeared normal on screening tests (Ref. 1). EPA agrees that teasing of peripheral nerves should not be a requirement unless the screening examination reveals damage to the peripheral nerves. Therefore, the guideline is modified from "In addition, peripheral nerve fiber testing shall be used" to "may be used" (Ref. 48). This modification is included in the final rule in § 799.1560(c)(2)(i)(C)(*2*)(*iv*).

CMA also commented that a section of normal tissue should not be included in each staining to assure that adequate staining has occurred because control animals being processed with treated animals should accomplish the same thing. Additionally, CMA commented, the standard practice is to have positive control tissues for all special stains (Ref. 1). EPA does not agree because the inclusion of normal tissue is an important element in establishing the replicability of results. The guidelines, however, do not preclude the inclusion of positive controls for special stains and indeed specification of their inclusion may be recommended in the annual guideline-update process (Ref. 48).

CMA also commented that photographing all representative lesions is not necessary and should not be required (Ref. 1). EPA does not agree because special stains, in some cases, may deteriorate with time and photographs insure an adequate record of the results (Ref. 48).

n. Concerning test procedures in § 798.6400(d)(8)(iv)(E)(*4*), CMA commented that specific sites which reveal a lesion under light microscopic evaluation should be further evaluated by electron microscopy at that dose level only and not at the next highest dose level which showed no lesion under light microscopic evaluation (Ref. 1). EPA does not agree. Electron microscopy is not to be done at dose levels where light microscopy reveals a lesion. It is only to be used to make sure that there are no significant morphological changes at a dose that does not show changes under the light microscope (Ref. 67).

E. Developmental Neurotoxicity

1. CMA disputed EPA's justification for developmental neurotoxicity testing, stating that the effects caused by analogous compounds, methyl and ethyl ethylene glycol ether (EGME and EGEE) were at doses of 50 mg/kg and 25 ppm whereas DGBE has been shown not to cause developmental effects at 1,000 mg/kg (Ref. 1). EPA agrees that EGME and EGEE appear more potent than DGBE where developmental toxicity is concerned. Therefore, EPA has made the developmental neurotoxicity test a second-tier test which need not be initiated until Tier I data has been reviewed in a public program review and the test sponsor notified to initiate testing.

2. CMA submitted a report by Dr. E. Marshall Johnson which contended that behavioral tests have not been shown to be more sensitive indicators of developmental neurotoxicity than standard Segment II endpoints (fetal weight, malformations, resorptions) which are evaluated in EPA's guideline for developmental toxicity (Ref. 39). Therefore, CMA commented, the developmental toxicity study, deemed adequate by EPA, should satisfy those data needs (Ref. 1). EPA does not agree with these comments based on a review of recent literature in this field which supports the use of behavioral tests as frequently more sensitive indicators of neurotoxicity in the newborn. (Ref. 40).

3. CMA commented that none of the tests included in the battery to screen for developmental neurotoxicity has received acceptance as a valid predictor of neurotoxicity and most have only been used in a few laboratories (Ref. 1). EPA disagrees. While some testing has been revised, the methods chosen have been widely recommended for screening for neurotoxicity (Ref. 60) by the National Academy of Sciences/National Research Council (Refs. 56 through 58) and the Federation of American Societies for Experimental Biology (Ref. 59).

4. Concerning § 795.250(c)(1)(iv), CMA commented that an extraordinarily large number of animals would have to be tested in order to detect a 20 percent change with 90 percent power at the 5 percent level assuming a coefficient of variation of 25 percent in the tests in § 795.250(c)(7) (Ref.1). The Agency has revised the guideline to require at least 20 litters at each dose level. This number assumes a coefficient of variation of 20 to 25 percent for most behavioral tasks. If, in a given laboratory, the coefficient of variation for a given task is greater than 20 to 25 percent, then calculation of sample size to detect a 20 percent change from control values with 80 percent power will have to be done (Ref. 60).

5. Concerning test procedures in § 795.250(c)(3)(iii), CMA commented that overt meternal toxicity such as a 20 percent reduction in weight gain was excessive and would alter measurements in the offspring (Ref. 1). EPA agrees and has revised the guideline to require maternal toxicity not to result in a reduction in weight gain exceeding 20 percent (Ref. 60).

6. Concerning test procedures in § 795.250(c)(6)(i), CMA commented that it is too restrictive to expect that the same technician observe the animals each day (Ref. 1). EPA agrees with this comment in principle, although it would prefer the same technician to observe the animals. EPA has revised the guideline to require the animals to be observed by trained technicians who are blind with respect to the animal's treatment and also requires a demonstration of inter-observer reliability (Ref. 60).

7. CMA commented that EPA should merely recommend the nervous system functions that it wants tested and should not identify devices that should be used because it is too restrictive (Ref. 1). EPA does not agree. The Agency has provided information as to which types of testing should be conducted. It has also provided references for guidance in how to conduct the testing and what types of equipment have been used by noted experts in the particular fields. This was done to assist the test sponsors in the design of the study. Particular measures are specified because of their wide usage in the past and the confidence that can be placed in the data from those tests or measures.

8. Concerning test procedures proposed in § 795.250 (c)(7) (i) and (ii) (now codified as § 795.250 (c)(7) (ii) and (iii) in the final rule), CMA commented that pup weights should be taken on the same days that motor activity measurements are required during the preweaning period (Ref. 1). EPA agrees. The proposed guideline required weighing of pups at "birth, days 12, 17, 21 and bi-weekly thereafter." The revised guideline incorporates the comment in § 795.250(c)(7)(ii) by stipulating that pups should be weighed "at birth, or soon thereafter, and on days 4, 7, 13, 17, and 21 and biweekly thereafter" (Ref. 60).

9. Concerning test procedures proposed in § 795.250(c)(7)(ii) (now codified as § 795.250(c)(7)(iii) in the final rule), CMA commented that a 2-day tolerance should be allowed to schedule weighing and motor activity tests depending on personnel availability and illness (Ref. 1). In the proposal, the Agency specified monitoring of motor activity on days 13, 17, 21, 30, 45, and 60. These days were selected because they

represented critical periods of motor development. The revised guideline has eliminated the requirement of testing on day 30 and has allowed for a 2-day tolerance for days 45 and 60 only. This revision is at § 795.250(c)(7)(iii) in the final rule.

10. CMA commented that the motor activity test should not be required because it evaluates a non-specific endpoint which is affected by developmental delay and illness (Ref. 1). The Agency disagrees. Motor activity is an apical test in that it requires the coordinated participation of sensory, motor, and integrative systems, and therefore it is ideal for screening compounds for their neurotoxic potential. Although activity levels may indeed be influenced by variables such as illness and malaise, to focus on these instances is to ignore the extensive use of motor activity measurements for assessing the neural substrates of behavior in neurobiology, neuropharmacology, and neurotoxicology. For instance, motor activity has been recommended as a primary screen for neurotoxicity by several expert committees (Refs. 56, 57, and 59). In addition, motor activity changes are frequently found in advance of either morphologic evidence of a lesion or grossly overt signs of intoxication, and therefore the Agency does not agree with the assertion that measures of motor activity are either insensitive or superfluous (Ref. 60).

11. Concerning test procedures proposed in § 795.250(c)(7)(ii)(A) (now codified as § 795.250(c)(7)(iii)(B) in the final rule), there was apparently some confusion concerning the duration of the motor activity session, how an asymptotic level is determined, and how the date should be collected (Ref. 1). EPA has rewritten this provision in § 795.250(c)(7)(iii)(B) to avoid any confusion (Ref. 60).

12. Concerning test procedures in § 795.250(c)(7)(iv), CMA commented that the Agency failed to refer to design or calibration of equipment for the auditory startle test (Ref. 1). EPA agrees with this comment and had identified references in the revised guideline (see § 795.250(e)) which provide all the information necessary regarding the equipment and methodology that should be used to conduct this test (Ref. 60).

13. Concerning test procedures proposed in § 795.250(c)(7)(v), CMA commented the specifying the Biel water maze is too restrictive and that the investigator should have the option to use another device that tests learning. CMA also considered this test to be very labor intensive because it is not automated (Ref. 1). In response to these comments the Agency has replaced the Biel water maze test with one for active avoidance under § 795.250(c)(7)(v) of the final rule. Reviews of this test and references for conduct of this test are provided in § 795.250(e) (1) and (7). This test was selected among other possible tests because Nelson et al. (Ref. 61) included this test among their battery of tests when evaluating the effects of other glycol ethers on development of the nervous system (Ref. 60).

14. Concerning test procedures in § 795.250(c)(8)(ii), CMA referred the Agency to the comments made on the neuropathology guideline § 798.6400 (Ref. 1). EPA's responses to these comments are included in Unit II.D.6. and would apply to neuropathology conducted in the developmental neurotoxicity screening test (Ref. 60).

F. Mutagenicity/Oncogenicity

CMA submitted two mutagenicity studies, the mouse bone marrow micronucleus test (Ref. 63) and the Chinese hamster ovary cell/hypoxanthine-guanine-phosphoribosyl transferase (CHO/HGPRT) forward mutation assay (Ref. 64). Both studies reported negative results. EPA agrees that these studies are negative (Ref. 65 and 66) and therefore is not requiring additional mutagenicity testing or an oncogenicity test triggered from mutagenicity findings. In the proposed test rule for DGBE and DGBA oncogenicity was not proposed as a first-tier test, even though a section 4(a)(1)(B) finding has been made, because previous data have not shown oncogenicity to be a concern for the glycol ether category. Currently the National Toxicology Program (NTP) is conducting an oncogenicity study of structurally similar glycol ethers. If this test is positive, EPA may repropose oncogenicity testing for DGBE.

G. Pharmacokinetics

1. *Oral pharmacokinetics.* The Eastman Kodak Company submitted a metabolism study in which DGBA was orally administered to rats (Ref. 41). CMA commented that this study evaluated oral pharmacokinetics (absorption, distribution, and excretion) for both DGBA and DGBE because DGBA rapidly converts to DGBE (Ref. 1). EPA agrees that this metabolism study provides sufficient information for DGBA and DGBE and is not requiring the oral pharmacokinetics test in rats for DGBA and DGBE.

2. *Dermal pharmacokinetics.* The Eastman Kodak Company submitted an *in vitro* dermal absorption study in rats of DGBE and DGBA (Ref. 42) and recommended that this study be used to satisfy the dermal absorption data needs in lieu of the proposed *in vivo* dermal absorption studies of DGBA and DGBE (Ref. 30). In a separate and contradicting comment, CMA recommended that dermal absorption of DGBA and DGBE be compared in human skin *in vitro* to avoid extrapolation from animals (Ref. 1). EPA reviewed the study by Eastman Kodak and found it does not satisfy the data needs for dermal absorption (Ref. 44). EPA believes that *in vitro* dermal absorption tests cannot be substituted for *in vivo* dermal absorption tests due to studies on similar compounds in which *in vitro* results either over-predicted or under-predicted the *in vivo* absorption rate, with none approximating the *in vivo* value (Ref. 43). Therefore, EPA is requiring dermal pharmacokinetics as an *in vivo* test in rats.

3. *Interchangeable use of DGBE and DGBA.* Industry representatives claimed that DGBE and DGBA cannot be used interchangeably in the many consumer products in which DGBE is currently used and which allow for consumer dermal exposure. Because of this, and because DGBA is used only in latex paint, they argue that EPA should not be concerned with the comparative dermal absorption of DGBE and DGBA (Ref. 30). EPA agrees that DGBA cannot be readily substituted for DGBE because of different chemical properties and greater cost (Ref. 45). EPA also agrees that DGBA is primarily used in latex paint, but it is also used in ink (Ref. 45). Because Eastman Kodak's study of *in vitro* dermal absorption rates found that DGBA is absorbed 3 times faster than DGBE (1.43 versus 0.5 milligrams per centimeter squared per hour) (Ref. 42), the possibility that DGBA may be more readily absorbed should be evaluated by an *in vivo* test, which the Agency considers more predictive of the living state (Ref. 44).

4. *Use of pharmacokinetics data in risk assessment.* CMA asked how the pharmacokinetics data will be used for risk assessment (Ref. 1). EPA has three purposes for requiring pharmacokinetics testing: To generate comparative data on (1) the absorption of DGBE after administration by the dermal route, (2) the biotransformation of DGBE absorbed by this route, and (3) the comparative dermal absorption of DGBE and DGBA. The resulting information is expected to allow more relevant and more predictive assessments of the risks of DGBE and DGBA. The predictions will include the relative risks of dermal exposure to DGBE and DGBA, and ingestion of and dermal exposure to

DGBE (Ref. 44) using ingestion data from the Eastman Kodak study (Ref. 41). These data are also useful for high to low dose extrapolation.

5. *Identification and quantification of metabolites.* An industry spokesman stated that it is "technically impossible" to identify and quantify several metabolites in urine when their total quantity may be less than one milligram (Ref. 30). The scientific literature on xenobiotic metabolism contains hundreds of papers reporting the identification and quantification of metabolites present in body fluids in microgram and lower quantities. Two of many journals containing such papers are "Xenobiotica" and "Drug Metabolism and Disposition." EPA scientists should be consulted if necessary (Ref. 44).

6. *Washing efficiency study.* CMA (Ref. 1) and industry representatives (Ref. 30) objected to the proposed skin washing efficiency study stating it was a very inexact study with no background data that would make it useful for hazard assessment. EPA believes that there are important toxicological implications if a chemical adsorbs to and cannot be easily washed off the skin, especially because dermal contact with the products which contain DGBE and DGBA is very likely in their use (Ref. 44). In addressing CMA's concern about the lack of background data on this test, EPA notes the report on the washing efficiency test in removal of 2-Mercaptobenzothiazole-Ring-UL-^{14}C and 2-Mercaptobenzothiazole Disulfide-Ring-UL-^{14}C from rat skin which CMA arranged to be conducted at the Southern Research Institute in March 1986 (Ref. 46).

H. Economic Impact Analysis

CMA commented that EPA made several factual errors in its economic impact analysis which led to an underestimation of the proposed rule's economic consequences (Ref. 1). The Agency agrees with CMA's comment that demand for DGBE by 1989 will not grow to 135 million pounds. EPA believes 85 million pounds is a better estimate of the 1989 market (Ref. 47) and has factored this into the economic analysis of the final rule (Ref. 2). EPA does not agree with CMA's comment that 30 cents per pound is a more relevant actual sales price of DGBE than the 41 cents which was used by EPA in its analysis. The 41 cents per pound price was published by the United States International Trade Commission as the unit value sales price for 1984 (Ref. 47). In the economic analysis for the final rule, the unit value sales price for 1985 (38 cents per pound) was used (Ref. 2).

III. Final Test Rule

A. Findings

EPA is basing its final health effects testing requirements of DGBA and DGBE on the authority of sections 4(a)(1) (A) and (B) of TSCA. Under section 4(a)(1)(A), EPA finds that the use of DGBE and DGBA in consumer goods may present an unreasonable risk of adverse hematological, reproductive, hepatic, and renal effects. These findings are based on the available toxicity data discussed in Unit II of this preamble and in Unit II.G of the preamble to the proposed rule (51 FR 27880).

Under section 4(a)(1)(B), EPA finds that DGBA and DGBE are produced in substantial quantities and that there is or may be substantial human exposure to both chemicals in their manufacture, processing, and use. The annual production of DGBA and DGBE is 4.8 to 6 million and 69.7 million pounds per year, respectively (Ref. 2). Potentially 15 to 20 million consumers and 4,500 occupational painters are exposed to DGBA and DGBE in latex paint (Refs. 31 and 3). The annual dermal and inhalation exposure of consumers to DGBA and DGBE in paint is estimated to be as high as 4,500 and 3,300 mg/yr (Refs. 4 and 55). Also, 20 to 41 million consumers are potentially exposed to DGBE in cleaning products by the dermal and inhalation routes at 840 to 19,500 mg/yr (Ref. 31 and 4). Additionally, there is a potential for dermal absorption of DGBE from the other consumer products in which it is present: Floor cleaners, floor wax strippers, floor finishes, spray cleaners, penetrating oils, metal cleaners, and paint removers. Also, there is a potential for dermal absorption of DGBE in employees of manufacturers and processors from products used in industry: Inks, solvents, carriers, brake fluids, cutting oils, and foam fire extinguishers (Refs. 5, 6, and 7). Finally, there is a potential for dermal absorption of DGBE and DGBA in manufacturing, processing, and distribution from such operations as equipment repair, sampling the process stream, cleaning equipment, changing filters, spill cleanups, and handling, transfer, and packaging of products. Additional support for the section 4(a)(1)(B) finding is discussed in Unit II of this preamble and in Unit II.D of the preamble of the proposed rule (51 FR 27880).

EPA finds that the available data are sufficient to predict the developmental and mutagenic effects of DGBE and DGBA, but insufficient to reasonably predict or determine the subchronic, kidney, liver, hematological, reproductive, neurotoxic, and developmental neurotoxic effects, and dermal absorption from exposure to DGBE and DGBA from the manufacturing, processing, and use of these chemicals. In addition, the available data are insufficient to evaluate fully the pharmacokinetics of these chemicals, specifically the effect of administration route on absorption, biotransformation, and excretion. EPA finds that testing is necessary to develop these data. EPA believes that the data resulting from this testing will be relevant to a determination as to whether the manufacture, processing, distribution, or use of DGBE and DGBA does or does not present an unreasonable risk of injury to human health.

Existing data adequately demonstrate that DGBA is rapidly hydrolyzed to DGBE. Threrefore, EPA finds that separate health effects testing of DGBA is not necessary. The only exception to this is an *in vivo* dermal absorption test of DGBA to determine the dermal absorption of DGBA relative to DGBE. The required dermal pharmacokinetics test of DGBE in rats will enable a comparison of absorption, biotransformation, and excretion by the dermal route of administration with the oral route reported in the metabolism study by Eastman Kodak (Ref. 8).

Testing for subchronic and neurotoxic effects shall be by the dermal route because it is a major route of exposure. The fertility satellite data will be obtained as a result of dermal exposure since the fertility screen is a component of the subchronic toxicity study. Acceptance of this route of exposure for DGBE should not be regarded as a precedent for the use of dermal exposure in reproductive and fertility studies, in general. Testing for developmental neurotoxicity should be by the oral route. Although inhalation is also a main route of exposure, EPA believes such a route of administration is inappropriate due to the technical difficulty of testing DGBE by this route.

B. Required Testing and Test Standards

On the basis of these findings, EPA is requiring that certain health effects testing of DGBE be conducted in accordance with specific guidelines set forth in 40 CFR Part 798. The Agency is also requiring that developmental neurotoxicity testing of DGBE, if required after public program review, pharmacokinetics testing of DGBE, and

dermal absorption testing of DGBA be conducted in accordance with specific guidelines set forth in 40 CFR Part 795, which are published with today's final rule.

The final rule provides for tiered testing. The following tests are in Tier I: Subchronic toxicity with particular emphasis on reproductive, hematological, and kidney effects; neurotoxicity; pharmacokinetics and dermal absorption. Developmental neurotoxicity is the only Tier II test and will be required pending the assessment of the data in the Tier I tests.

All of the tests are required. However, before Tier II testing is required to be initiated, EPA will hold a public program review of the Tier I data from the functional observational battery, motor activity, neuropathology, and reproductive tests. A review of these data will be conducted to determine if developmental neurotoxicity testing should be initiated. Public participation in this program review will be in the form of written public comments or a public meeting. Request for public comments or notification of a public meeting will be published in the **Federal Register**. Should EPA determine from the weight of available evidence that proceeding to the developmental neurotoxicity test is no longer warranted, the Agency will propose to repeal the appropriate testing requirement and, after public comment, issue a final amendment to rescind this requirement. Should EPA determine that developmental neurotoxicity testing is necessary, the Agency will notify the test sponsor by certified letter or **Federal Register** notice that testing shall be initiated.

Although a section 4(a)(1)(B) finding was made, oncogenicity testing is not being required because it was proposed to be triggered from positive mutagenicity findings. Negative Tier I mutagenicity tests have since been conducted by industry. However, the National Toxicology Program (NTP) is currently conducting oncogenicity studies of structurally similar glycol ethers. If these tests are positive, EPA may repropose oncogenicity testing for DGBE.

DGBE shall be tested for subchronic toxicity (§ 798.2250). Exposure shall be by the dermal route in the rat. Urinalyses in all animals shall be done before the study starts, at day 30 and day 90. The details for the special hematologic studies are specified in § 799.1560(c)(1)(i)(B)(*3*). Subchronic dermal neurotoxicity studies are required to be performed in the rat and include: A functional observational battery (§ 798.6050), motor activity (§ 798.6200), and neuropathology (§ 798.6400). These neurotoxicity tests may be run in combination with the subchronic test provided the requirements of either are not violated. The neuropathology test, in particular, may require separate animals or a satellite group of animals since the guideline requires specific tissue perfusion and fixation techniques which are quite different from those tissue preparations normally used in toxicity studies.

Some additional work is required in the subchronic test to evaluate reproductive toxicity. Special organs of the reproductive tract to be weighed and evaluated are specified in § 799.1560(c)(1)(B) (*6*), (*7*), and (*8*). The integrity of the various cell stages of spermatogenesis shall be determined with particular attention directed toward achieving optimal quality in the fixation and embedding; preparations of testicular and associated reproductive organ samples for histology should follow the recommendations of Lamb and Chapin (Ref. 10), or an equivalent procedure. Histological analyses shall include evaluations of the spermatogenic cycle, i.e., the presence and integrity of the 14 cell stages. These evaluations should follow the guidance provided by Clermont and Perey (Ref. 9). Information should also be provided regarding the nature and level of lesions observed in control animals for comparative purposes. This evaluation of the spermatogenic pattern has been shown by Creasy and Foster (Ref. 11) and Foster et al. (Ref. 12) to be the most sensitive indicator of glycol ether-induced testicular injury. Data on female cyclicity shall be obtained by performing vaginal cytology over the last two weeks of dosing; the cell staging technique of Sadleir (Ref. 13) and the vaginal smear method in Hafez (Ref. 68), or equivalent methods, should be used. Data should be provided on whether the animal is cycling and the cycle length. The ovary shall be serially sectioned with a sufficient number of sections examined to adequately detail oocyte and follicular morphology. The methods of Mattison and Thorgiersson (Ref. 14) and Pederson and Peters (Ref. 15) may provide guidance. The strategy for sectioning and evaluation is left to the discretion of the investigator, but shall be described in detail in the protocol and final report. The nature and background level of lesions in control tissue shall also be noted. A satellite group of animals is required to evaluate fertility effects at high dose of DGBE. With the cohabiting of high dose males and high dose females and the cohabiting of control males and control females, the satellite group will need 20 males and 40 females to be added to the subchronic study. If the results of the above testing suggest concern for reproductive effects, EPA will evaluate the need for additional reproductive effects testing under a separate TSCA section 4 rulemaking.

EPA is also requiring pharmacokinetics testing of DGBE in rats to determine absorption, biotransformation, and excretion of DGBE by the dermal route of administration and the testing of DGBA to determine dermal absorption in accordance with § 795.225. EPA is not promulgating the proposed oral/dermal pharmacokinetics testing in the guinea pig because it is not a test species. All the required testing is in the rat by the dermal or oral route.

Developmental neurotoxicity testing of DGBE in the rat according to § 795.250, issued in the final rule, is required unless Tier I data indicates the testing is not needed. EPA will review the neurotoxicity, reproductive toxicity, and other available data and hold a public program review before developmental neurotoxicity testing is required to be initiated. Although this test was proposed to be conducted by the dermal route of administration, EPA now strongly recommends the oral route. The offspring shall be evaluated for developmental neurotoxicity at various stages following birth.

The Agency is requiring that the above-referenced TSCA Health Effects Test Guidelines and revisions and other cited methods be the test standards for the purposes of the required tests for DGBE and DGBA. The TSCA test guidelines for health effects testing specify generally accepted minimum conditions for determining the health effects for substances like DGBE and DGBA to which humans are expected to be exposed.

C. Test Substance

EPA is requiring testing of DGBE and DGBA of at least 95 percent purity. EPA believes that test materials of this purity are available at reasonable cost (Refs. 16 and 17). Radiolabeled ^{14}C-DGBE will be needed for the pharmacokinetics testing and ^{14}C-DGBA for the dermal absorption study.

D. Persons Required to Test

Section 4(b)(3)(B) specifies that the activities for which EPA makes section 4(a) findings (manufacture, processing, distribution in commerce, use, and/or disposal) determine who bears the responsibility for testing a chemical. Manufacturers and persons who intend

to manufacture the chemical are required to test if the findings are based on manufacturing ("manufacture" is defined in section 3(7) of TSCA to include "import"). Processors and persons who intend to process the chemical are required to test if the findings are based on processing. Manufacturers and processors and persons who intend to manufacture and process the chemical are required to test if the exposures giving rise to the potential risk occur during distribution in commerce, use, or disposal of the chemical.

Because EPA has found that existing data are inadequate to assess the health risks from the manufacturing, processing, distribution, and use of these chemicals, EPA is requiring that persons who manufacture or process, or who intend to manufacture or process, DGBA or DGBE, other than as an impurity, at any time from the effective date of the final test rule to the end of the reimbursement period are subject to the testing requirements contained in this final rule for their chemical. The end of the reimbursement period will be 5 years after the last final report is submitted or an amount of time equal to that which was required to develop data if more than 5 years after the submission of the last final report required under the test rule.

Since DGBA metabolizes into DGBE in the human body, EPA is requiring testing of DGBE to enable EPA to determine the effects of both DGBE and DGBA. Thus persons who manufacture or process DGBE or DGBA are responsible for the testing of DGBE. However, because DGBE must be used to manufacture DGBA, the DGBA manufacturers will be paying for a portion of the testing through an increased price of DGBE. Therefore, EPA is not requiring the manufacturers of DGBA to share in the actual cost of testing DGBE. EPA is also requiring a dermal absorption test for DGBA. Since this data is intended to enable EPA to determine the effects of DGBA, only persons who manufacture or process DGBA are required to conduct this test.

Because TSCA contains provisions to avoid duplicative testing, not every person subject to this rule must individually conduct testing. Section 4(b)(3)(A) of TSCA provides that EPA may permit two or more manufacturers or processors who are subject to the rule to designate one such person or a qualified third person to conduct the tests and submit data on their behalf. Section 4(c) provides that any person required to test may apply to EPA for an exemption from the requirement. EPA promulgated procedures for applying for TSCA section 4(c) exemptions in 40 CFR Part 790.

Manufacturers (including importers) subject to this rule are required to submit either a letter of intent to perform testing or an exemption application within 30 days after the effective date of the final test rule. The required procedures for submitting such letters and applications are described in 40 CFR Part 790. Although EPA has not identified any individuals who manufacture DGBE or DGBA as a byproduct, such persons are also subject to the requirements of the final test rule.

Processors subject to the final rule, unless they are also manufacturers, are not required to submit letters of intent or exemption applications, or to conduct testing, unless manufacturers fail to submit notices of intent to test or later fail to sponsor the required tests. The Agency expects that the manufacturers will pass an appropriate portion of the costs of testing on to processors through the pricing of their products or other reimbursement mechanisms. If manufacturers perform all the required tests, processors will be granted exemptions automatically. If manufacturers fail to submit notices of intent to test or fail to sponsor all the required tests, the Agency will publish a separate notice in the **Federal Register** to notify processors to respond; this procedure is described in 40 CFR Part 790.

EPA is not requiring the submission of equivalence data as a condition for exemption from the required testing for DGBE and DGBA. As noted in Unit III.C., EPA is interested in evaluating the effects attributable to DGBE and DGBA and has specified relatively pure substances for testing.

Manufacturers and processors subject to this test rule must comply with the test rule development and exemption procedures in 40 CFR Part 790 for single-phase rulemaking.

E. Reporting Requirements

EPA requires that all data developed under the rule be reported in accordance with its TSCA Good Laboratory Practice (GLP) Standards which appear in 40 CFR Part 792.

In accordance with 40 CFR Part 790 under single-phase rulemaking procedures, test sponsors are required to submit individual study plans within 45 days before the initiation of each test.

EPA is required by TSCA section 4(b)(1)(C) to specify the time period during which persons subject to a test rule must submit test data. EPA is requiring that the subchronic toxicity, subchronic neurotoxicity, developmental neurotoxicity, and pharmacokinetics tests shall be completed and the final reports submitted to EPA as specified in the following Table. Progress reports for the tests are required at 6-month intervals starting 6 months from the effective date of the final test rule for most tests or as specified in the following table for the Tier II test:

REPORTING REQUIREMENTS FOR DGBE AND DGBA

Test	*Test Standard* (40 CFR Citation)	*Reporting Deadline for Final Reports* (months after the effective date of final rule, except as indicated [1])	*Number of Interim (6-month) Reports Required*
Tier I:			
Subchronic toxicity and satellite fertility screen	§ 798.2250	15	2
Neurotoxicity/ Behavioral Effects:			
Functional observational battery	§ 798.6050	15	2
Motor activity	§ 798.6200	15	2
Neuropathology	§ 798.6400	15	2
Pharmacokinetics	§ 795.225	12	1
Tier II:			
Developmental neurotoxicity	§ 795.250	[1] 15	[2] 2

[1] Figure indicates the reporting deadline, in months, calculated from the date of notification of the test sponsor by certified letter or **Federal Register** notice that, following public program review of all of the then existing data for DGBE, the Agency has determined that the required testing must be performed.

[2] Figure indicates the number of interim (6-month) reports required from the time EPA notifies the test sponsor that the testing must be initiated.

TSCA section 14(b) governs EPA's disclosure of all test data submitted pursuant to section 4 of TSCA. Upon receipt of data required by the rule, EPA will publish a notice of receipt in the **Federal Register** as required by section 4(d).

Persons who export a chemical which is subject to a final section 4 test rule are subject to the export reporting requirements of section 12(b) of TSCA. Rules interpreting the requirements of section 12(b) are in 40 CFR Part 707. In brief, as of the effective date of the test rule, an exporter of DGBA or DGBE must report to EPA the first annual

export or intended export of either chemical to each country. EPA will notify the foreign country concerning the test rule for the chemical.

F. Enforcement Provisions

The Agency considers failure to comply with any aspect of a section 4 rule to be a violation of section 15 of TSCA. Section 15(1) of TSCA makes it unlawful for any person to fail or refuse to comply with any rule or order issued under section 4. Section 15(3) of TSCA makes it unlawful for any person to fail or refuse to: (1) Establish or maintain records, (2) submit reports, notices, or other information, or (3) permit access to or copying of records required by TSCA or any regulation or rule issued under TSCA.

Additionally, TSCA section 15(4) makes it unlawful for any person to fail or refuse to permit entry or inspection as required by TSCA section 11. Section 11 applies to any "establishment, facility, or other premises in which chemical substances or mixtures are manufactured, processed, stored, or held before or after their distribution in commerce * * *." The Agency considers a testing facility to be a place where the chemical is held or stored and, therefore, subject to inspection. Laboratory inspections and data audits will be conducted periodically in accordance with the authority and procedures outlined in TSCA section 11 by duly designated representatives of the EPA for the purpose of determining compliance with the final rule for DGBA and DGBE. These inspections may be conducted for purposes which include verification that testing has begun, schedules are being met, and reports accurately reflect the underlying raw data, interpretations, and evaluations, and to determine compliance with TSCA GLP Standards and the test standards established in the rule.

EPA's authority to inspect a testing facility also derives from section 4(b)(1) of TSCA, which directs EPA to promulgate standards for the development of test data. These standards are defined in section 3(12)(B) of TSCA to include those requirements necessary to assure that data developed under testing rules are reliable and adequate, and to include such other requirements as are necessary to provide such assurance. EPA maintains that laboratory inspections are necessary to provide this assurance.

Violators of TSCA are subject to criminal and civil liability. Persons who submit materially misleading or false information in connection with the requirement of any provision of this rule may be subject to penalties which may be calculated as if they never submitted their data. Under the penalty provisions of section 16 of TSCA, any person who violates section 15 of TSCA could be subject to a civil penalty of up to $25,000 for each violation with each day of operation in violation constituting a separate violation. This provision would be applicable primarily to manufacturers that fail to submit a letter of intent or an exemption request and that continue manufacturing after the deadlines for such submissions. This provision would also apply to processors that fail to submit a letter of intent or an exemption application and continue processing after the Agency has notified them of their obligation to submit such documents (see 40 CFR 790.48(b)). Knowing or willful violations could lead to the imposition of criminal penalties of up to $25,000 for each day of violation and imprisonment for up to 1 year. In determining the amount of penalty, EPA will take into account the seriousness of the violation and the degree of culpability of the violator as well as all the other factors listed in TSCA section 16. Other remedies are available to EPA under section 17 of TSCA, such as seeking an injunction to restrain violations of TSCA section 4.

Individuals as well as corporations could be subject to enforcement actions. Sections 15 and 16 of TSCA apply to "any person" who violates provisions of TSCA. EPA may, at its discretion, proceed against individuals as well as companies themselves. In particular, this includes individuals who report false information or who cause it to be reported. In addition, the submission of false, fictitious, or fraudulent statements is a violation under 18 U.S.C. 1001.

IV. Economic Analysis of Final Rule

To assess the potential economic impact of the rule, EPA has prepared an economic analysis (Ref. 2) that evaluates the potential for significant economic impact on industry as a result of the required testing. The economic analysis estimates the costs of conducting the required testing and evaluates the potential for significant adverse economic impact as a result of these test costs by examining four market characteristics of DGBA and DGBE: (1) Price sensitivity of demand, (2) industry cost characteristics, (3) industry structure, and (4) market expectations. If there is no indication of adverse effect, no further economic analysis will be performed; however, if the first level of analysis indicates a potential for significant economic impact, a more comprehensive and detailed analysis is conducted which more precisely predicts the magnitude and distribution of the expected impact.

Total direct testing costs for both tiers of the final rule for DGBE are estimated to range from $305,540 to $389,300. This estimate includes the costs for both the required minimum series of tests as well as the conditional tests. To predict the financial decisionmaking practices of manufacturing firms, these costs have been annualized. Annualized costs are compared with annual revenue as an indication of potential impact. The annualized costs represent equivalent constant costs which would have to be recouped each year of the payback period in order to finance the testing expenditure in the first year.

The annualized test costs for both tiers (using a cost of capital of 7 percent over a period of 15 years) range from $33,545 to $42,741. Based on the reported 1985 production volume of 69.7 million pounds, the unit test costs range from 0.047 to 0.061 cents per pound. In relation to a unit sales value of 38 cents per pound for DGBE, these costs represent 0.12 to 0.16 percent of unit sales value.

Total direct testing costs for the final testing for DGBA are estimated to range from $22,670 to $29,570. The annualized test costs range from $2,489 to $3,246. Based on an estimated production range of 4.8 to 6 million pounds and adjusting for upstream testing costs, because DGBA is manufactured form DGBE, the unit test costs range from 0.052 to 0.068 cents per pound. Because 0.83 pounds of DGBE are required to produce 1 pound of DGBA, the latter will incur an additional 0.10 through 0.13 cents per pound due to the testing costs of DGBE passed through in the manufacture of DGBA. In relation to the current sale price of 72 cents per pound for DGBA, these costs are equivalent to 0.21 to 0.26 percent of price.

Based on these costs and the uses of the chemicals, the economic analysis indicates that the potential for significant adverse economic impact as a result of this test rule is low. This conclusion is based upon the following observations:

1. The estimated unit test costs are low.

2. Technical performance tends to offset relatively high product price and contributes to overall price inelasticity of demand.

3. Market expectations appear favorable for DGBE and DGBA.

4. Producers of DGBE and DGBA also produce the likely substitutes for these chemicals, some of which can be produced in the same equipment.

Refer to the economic analysis (Ref. 2) for a complete discussion of test cost estimation and the potential for economic impact resulting from these costs.

V. Availability of Test Facilities and Personnel

Section 4(b)(1) of TSCA requires EPA to consider "the reasonably foreseeable availability of the facilities and personnel needed to perform the testing required under the rule." Therefore, EPA conducted a study to assess the availability of test facilities and personnel to handle the additional demand for testing services created by section 4 test rules. Copies of the study, Chemical Testing Industry: Profile of Toxicological Testing, October 1981, can be obtained through the National Technical Information Service (NTIS), 5285 Port Royal Road, Springfield, VA 22161 (PB 82-140773). A microfiche copy of this study is also included in the docket for this rule and is available to the public for copying. EPA has reviewed the availability of contract laboratory facilities to conduct the required neurotoxicity tests (Ref. 62), and believes that facilities will be made available for the tests. The laboratory review indicates that few laboratories are currently conducting these tests according to TSCA test guidelines and TSCA GLP Standards. However, the barriers faced by testing laboratories to gear up for these tests are not formidable. Laboratories will have to invest in testing equipment and personnel training, but EPA believes that these investments will be recovered as the neurotoxicity testing program under TSCA section 4 continues. EPA's expectations of laboratory availability were borne out under the testing requirements of the C_9 aromatic hydrocarbon fraction test rule (50 FR 20675; May 17, 1985). Pursuant to that rule, the manufacturers were able to contract with a laboratory to conduct the testing according to TSCA test guidelines and TSCA GLP Standards.

VI. Rulemaking Record

EPA has established a record for this rulemaking, (docket number OPTS-42085A). This record includes:

A. Supporting Documentation

(1) **Federal Register** notices pertaining to this rule consisting of:

(a) Notice containing the ITC designation of 2-(2-butoxyethoxy)ethyl acetate or DGBA (48 FR 55674; December 14, 1983).

(b) Rules requiring TSCA section 8(a) and 8(d) reporting on 2-(2-butoxyethoxy)ethyl acetate or DGBA (48 FR 55685 and 55686; December 14, 1983).

(c) Advance Notice of Proposed Rulemaking (ANPR) for 2-(2-Butoxyethoxy)Ethyl Acetate; Response to the Interagency Testing Committee (49 FR 45606; November 19, 1984).

(d) Notice of EPA's proposed test rule for DGBE and DGBA (51 FR 27880; August 4, 1986).

(e) Notice of final rule on TSCA GLP Standards (48 FR 53922; November 29, 1983).

(f) Notice of interim final rule on single-phase test rule development and exemption procedures (50 FR 20652; May 17, 1985).

(g) Notice of final rule on data reimbursement policy and procedures (48 FR 31786; July 11, 1983).

(h) Notice of Final Rule for Revision of TSCA Test Guidelines (52 FR 19056; May 20, 1987).

(2) Support document consisting of DGBA and DGBE economic analysis.

(3) TSCA test guidelines and other test methodologies cited as test standards for this rule.

(4) Chemical Testing Industry: Profile of Toxicological Testing, October 1981.

(5) Communications consisting of:

(a) Written public comments.

(b) Transcript of public meeting.

(c) Summaries of phone conversations.

(d) Meeting summaries.

(6) Reports—published and unpublished factual materials.

B. References

(1) CMA. Chemical Manufacturers Association. Washington, DC. Comments on EPA's proposed test rule for diethylene glycol butyl ether and diethylene glycol butyl ether acetate. (October 3, 1986).

(2) USEPA. U.S. Environmental Protection Agency. "Economic Impact Analysis of Final Test Rules for DGBE and DGBA". Economics and Technology Division, Office of Toxic Substances, USEPA, Washington, DC. (November 3, 1987).

(3) USEPA. "Exposure assessment for DGBE and DGBA." Intra-agency memorandum from Craig Matthiessen, Chemical Engineering Branch, to Catherine Roman, Test Rules Development Branch, Office of Toxic Substances, USEPA, Washington, DC. (April 11, 1986).

(4) USEPA. "Exposure to diethylene glycol monobutyl ether (DGBE) and diethylene glycol monobutyl ether acetate (DGBA) in consumer products." Karen A. Hammerstrom, Exposure Evaluation Division, Office of Toxic Substances, USEPA, Washington, DC. (November 24, 1986).

(5) Engelhard Industries. Letter from W.J. Stimpfel, Engelhard Industries Specialty Chemicals Division, 1 West Central Ave., East Newark, NJ 07029, to Paul Price, Test Rules Development Branch, Office of Toxic Substances, USEPA, Washington, DC. (March 27, 1984).

(6) NIOSH. National Institute for Occupational Safety and Health. Cincinnati, OH. Computer Printout: NIOSH Trade-name Ingredient Data Base—National Occupational Hazard Survey. (Retrieval April 3, 1984).

(7) Capital Systems Group, Inc., Kensington, MD and Dynamac Corp., Enviro Control Division, Rockville, MD. "2-(2-Butoxyethoxy)ethyl acetate and 2-(2-Butoxyethoxy) ethanol. Draft Technical Support Document." Prepared for Test Rules Development Branch, Existing Chemicals Assessment Division, Office of Toxic Substances, USEPA, Washington, DC. Contract No. 68-01-6530. (January 3, 1985).

(8) Kodak. Eastman Kodak Company. Health and Environment Laboratories, Rochester, NY. "The metabolism and disposition of [U-^{14}C-ethylene] diethylene glycol monobutyl ether acetate in the rat." (November 1985).

(9) Clermont, Y. and Perey, B. "Quantitative study of the cell population of the seminiferous tubules in immature rats." *American Journal of Anatomy.* 100:241-267. (1957).

(10) Lamb, J.C. and Chapin, R.E. "Experimental models of male reproductive toxicology." In: "Endocrine Toxicology." Thomas, J.A., Korach, K.S., and McLachlan, J.A., eds. New York, NY: Raven Press. pp. 85-115. (1985).

(11) Creasy, D.M. and Foster, P.M.D. "The morphological development of glycol ether-induced testicular atrophy in rat." *Experimental and Molecular Pathology.* 40:169-176. (1984).

(12) Foster, P.M.D, Creasy, D.M., Foster, J.R., Thomas, L.V., Cook, M.W., and Gangolli, S.D. "Testicular toxicity of ethylene glycol monomethyl and monoethyl ethers in the rat." *Toxicology and Applied Pharmacology.* 69:385-399. (1983).

(13) Sadleir, R.M.F.S. "Cycles and seasons." In: "Reproduction in Mammals: I. Germ Cells and Fertilization." Austin, C.R. and Short, R.V., eds. Chapter 4. New York, NY: Cambridge Press. (1978).

(14) Mattison, D.R. and Thorgiersson, S.S. "Ovarian aryl hydrocarbon hydroxylase activity and primordial oocyte toxicity of polycyclic aromatic hydrocarbons in mice." *Cancer Research.* 39:3471-3475. (1979).

(15) Pederson, T. and Peters, H. "Proposal for classification of oocytes and follicles in the mouse ovary." *Journal of Reproduction and Fertility.* 17:555-557. (1968).

(16) Kodak. Health and Environment Laboratories, Rochester, NY. "The *in vitro* hydrolysis of diethylene glycol monobutyl ether acetate in rat blood." (January 1985).

(17) Kodak. Health and Environment Laboratories, Rochester, NY. "Toxicity studies with diethylene glycol monobutyl ether. III. Six weeks repeat dose study." (April 1984).

(18) Kodak. Health and Environment Laboratories, Rochester, NY. "Estimation of the atmospheric concentration of diethylene glycol monobutyl ether acetate resulting from the application of latex paint." (January 1985).

(19) Kodak. Health and Environment Laboratories, Rochester, NY. "Exposure levels to diethylene glycol monobutyl ether solvent contained in an interior latex based paint." (September 5, 1985).

(20) Westat, Inc., Rockville, MD. "National household survey of interior painters." Prepared for USEPA, Washington, DC. (April 1987).

(21) The Procter and Gamble Company. Letter concerning diethylene glycol monobutyl ether exposure assessment from

D.W. Briggs. The Procter and Gamble Company, Sharon Woods Technical Center, 11520 Reed Hartman Highway, Cincinnati, OH. To Frank Benenati, Office of Toxic Substances, USEPA, Washington, DC. (January 28, 1985).

(22) Westat, Inc., Rockville, MD. "National usage survey of household cleaning products." Prepared for USEPA, Washington, DC. (July 1987).

(23) Krotov, Yu, A., Lykova, A.S. Skachkov, M.A., Sachkov, A.V., Mitrofanova, A.I., Kotova, E.L., Davydova, M.P., and Sarochinskaya, L.S. "The toxicological properties of diethyleneglycol ethers (carbitols) in relation to ensuring clean air." *Gigiena I Sanitariia* 2:14–17, (1981). (In Russian, English translation).

(24) Kesten, H.D., Mulinos, M.G., and Pomerantz, L. "Pathologic effects of certain glycols and related compounds." *Archives of Pathology*. 27:447–465. (1939).

(25) Smyth, H.F. Jr. and Carpenter, C.P. "Further experience with the range finding test in the industrial toxicology laboratory." *Journal of Industrial Hygiene and Toxicology*. 30:63–68. (1948).

(26) Dynamac Corp., Rockville, MD. "Evaluation of Studies on DGBE subchronic toxicity." Prepared for Health and Environmental Review Division, Office of Toxic Substances, USEPA, Washington, DC. Contract No. 68–02–3990 (April 8, 1987).

(27) Huntington Research Centre. Huntington, England. "28-Day subchronic percutaneous study of diethylene glycol butyl ether in rabbits." Project ECM–BTS 753. For Procter and Gamble Company. Cincinnati, OH. P&G 995/82956/58. (Sept. 1982).

(28) Dow Chemical Company. Toxicology Research Laboratory, Health and Environmental Sciences, Midland, MI. "Dowanol DB: A 5-week repeated vapor inhalation study in rats." (March 26, 1981).

(29) Hobson, D.W., Wyman, J.F., Lee, L.H., Bruner, R.H., and Uddin, D.E. "The subchronic toxicity of diethylene glycol monobutyl ether administered orally to rats." NMRI 87–45, Naval Medical Research Institute, Bethesda, MD 20814–5055. (August 1987).

(30) Transcript of public meeting on Diethylene glycol butyl ether and Diethylene glycol butyl ether acetate; proposed test rule. Held at USEPA, Washington, DC. (October 24, 1986).

(31) USEPA. "Consumer exposure to DGBE and DGBA." Intraagency memorandum from Karen Hammerstrom, Exposure Assessment Branch, to Catherine Roman, Test Rules Development Branch, Office of Toxic Substances, USEPA, Washington, DC. (April 29, 1986).

(32) International Research and Development Corporation, Mattawan, Michigan. "Study of fertility and general reproductive performance in rats." Test article (TSIN): B0547–01. DRD No. BSBTS–796S2. For Procter and Gamble Company, Cincinnati, OH. (January 10, 1984).

(33) USEPA. "Response to public comments on the proposed reproductive testing of diethylene glycol butyl ether and diethylene glycol butyl ether acetate (DGBE/DGBEA)." Intraagency memorandum from Harold Zenick, Reproductive Effects Assessment Group, Office of Research and Development, and Elaine Francis, Toxic Effects Branch, Office of Toxic Substances, to Catherine Roman, Test Rules Development Branch, Office of Toxic Substances, USEPA, Washington, DC. (July 31, 1987).

(34) Borriston Laboratories, Inc., 5050 Beech Place, Temple Hills, MD. "Screening of priority chemicals for reproductive hazards." For National Institute for Occupational Safety and Health, Experimental Toxicology Branch, Division of Biomedical and Behavioral Science, Cincinnati, OH. Contract No. 210–81–6010. (1983).

(35) Dodd, D.E., Snellings, W.M., Maronpot, R.R., Ballantyne, B. "Ethylene glycol monobutyl ether, acute, 9-day, and 90-day vapor inhalation studies in Fischer 344 rats." *Toxicology and Applied Pharmacology*. 68:405–414. (1983).

(36) Bushy Run Research Center, Export, PA. "A teratologic evaluation of ethylene glycol monobutyl ether in Fischer 344 rats and New Zealand white rabbits following inhalation exposure." Prepared for the Chemical Manufacturers Association, Washington, DC. (February 27, 1984).

(37) USEPA. "Comments on the proposed neurotoxicity testing for DGBE." Intraagency memo from Susan Vogt, Health and Environmental Review Division, to Gary Timm, Test Rules Development Branch, Office of Toxic Substances, USEPA, Washington, DC. (April 15, 1987).

(38) USEPA. Discussion of public meeting comments on the proposed neurotoxicity testing of DGBE. Record of meeting between Dr. Earnest Falke, Health and Environmental Review Division, and Catherine Roman, Test Rules Development Branch, Office of Toxic Substances, USEPA, Washington, DC. (April 30, 1987).

(39) Johnson, E.M. "The use of behavioral tests for developmental toxicity NOEL determinations." Jefferson Medical College, Philadelphia, PA. (July 14, 1986).

(40) Vorhees, C.V. and Syracuse Research Corporation. "Technical support services for comments on DGBE/DGBA proposed TSCA test rule." University of Cincinnati, Cincinnati, OH and Syracuse, NY. (May 15, 1987).

(41) Kodak. Health and Environment Laboratories, Rochester, NY. "The metabolism and disposition of [U-^{14}C-ethylene] diethylene glycol monobutyl ether acetate in the rat." (November 1985).

(42) Kodak. Health and Environment Laboratories, Rochester, NY. "*In vitro* percutaneous absorption studies with diethylene glycol monobutyl ether and its acetate ester." (November 17, 1986).

(43) Franz, T.J. "Percutaneous absorption: On the relevance of *in vitro* data." *Journal of Investigative Dermatology*. 64:190–195. (1975).

(44) USEPA. "DGBE and DGBA: Response to comments on proposed pharmacokinetics testing and review of *in vitro* dermal absorption study." Intraagency memo from Susan Vogt, Health and Environmental Review Division, to Gary Timm, Test Rules Development Branch, Office of Toxic Substances, USEPA, Washington, DC. (April 13, 1987).

(45) USEPA. "Response to comments on interchangeable use of DGBE and DGBA." Intraagency memo from Alan Cole, Regulatory Impacts Branch, to Gary Timm, Test Rules Development Branch, Office of Toxic Substances, USEPA, Washington, DC. (April 17, 1987).

(46) CMA. Letter from Carole Stack, Chemical Manufacturers Association, Washington, DC, to Kathy Hart, Test Rules Development Branch, Office of Toxic Substances, USEPA, Washington, DC. (March 5, 1986).

(47) USEPA. "Response to CMA's comments on economic impact analysis of proposed test rule for DGBE and DGBA." Intraagency memo from Alan Cole, Regulatory Impacts Branch, to Catherine Roman, Test Rules Development Branch, Office of Toxic Substances, USEPA, Washington, DC. (April 3, 1987).

(48) USEPA. "Response to public comments on the triethylene glycol ethers proposed test rule." Intraagency memo from David Klauder, Health and Environmental Review Division, to Gary Timm, Test Rules Development Branch, Office of Toxic Substances, USEPA, Washington, DC. (December 9, 1986).

(49) USEPA. "Response to public comments, proposed revision of TSCA test guidelines as published in 51 FR 1522 (January 14, 1986)." Test Rules Development Branch, Office of Toxic Substances, USEPA, Washington, DC. (April 1987).

(50) Pryor, G.T., Uyeno, E.T., Tilson, H.A., and Mitchell, C.L. "Assessment of chemicals using a battery of neurobehavioral tests: A comparative study." *Neurobehavioral Toxicology and Teratology*. 5:91–117. (1983).

(51) Buelke-Sam, J., Kimmel, C.A., Adams, J., Nelson, C.J., Vorhees, C.V., Wright, D.C., St. Omer, V., Korol, B.A., Butcher, R.E., Geyer, M.A., Holson, J.F., Kutscher, C.I., and Wayner, M.J. "Collaborative behavioral teratology study: Results." *Neurobehavioral Toxicology and Teratology* 7:591–624. (1985).

(52) Romano, Jr., J.A. and Landauer, M.R. "Effects of the organophosphorus compound, O-ethyl-N-dimethylphosphoramidocyanidate (Tabun), on flavor aversions, locomotor activity, and rotarod performance in rats." *Fundamental and Applied Toxicology*. 6:62–68. (1986).

(53) Spencer, P.S., Bischoff, M.C. and Schaumburg, H.H. "Neuropathological methods for the detection of neurotoxic disease." In: "Experimental and Clinical Neurotoxicology." Spencer, P.S. and Schaumburg, H.H., eds., Baltimore, MD: Williams & Wilkins, pp. 743–757. (1980).

(54) Norton, S. "Behavior versus morphology as an indicator of central nervous system toxicity." In: "Nervous System Toxicology." C.L. Mitchell, ed., New York, NY: Raven Press. pp. 247–258. (1982).

(55) USEPA. "Analysis of painting study of DGBE." Intraagency memo from Martin Halper, Exposure Evaluation Division, to Catherine Roman, Test Rules Development Branch, Office of Toxic Substances, USEPA, Washington, DC. (August 10, 1987).

(56) National Academy of Sciences/National Research Council. "Principles for Evaluating Chemicals in the Environment." Washington, DC: National Academy of Sciences. pp. 198–216. (1975).

(57) National Academy of Sciences/National Research Council. "Principles and Procedures for Evaluating the Toxicity of Household Substances." Washington, DC: National Academy of Sciences. pp. 111–118. (1977).

(58) National Academy of Sciences/National Research Council. "Toxicity Testing: Strategies to Determine Needs and Priorities." Washington, DC: National Academy of Sciences. pp. 62–64 and 169–174. (1984).

(59) Federation of American Societies for Experimental Biology, Life Science Research Office, Bethesda, MD. "Predicting Neurotoxicity and Behavioral Dysfunction from Preclinical Toxicological Data." Prepared for Center for Food Safety and Applied Nutrition, Food and Drug Administration, Department of Health and Human Services, Washington, DC. Contract No. FDA 223–83–2020. pp. 35–57 (May 1986).

(60) USEPA. "Developmental neurotoxicology guideline, public comments and EPA's responses—triethylene glycol ether series." Intraagency memo from Elaine Francis, Health and Environmental Review Division, to Carol Glasgow, Existing Chemical Assessment Division, Office of Toxic Substances, USEPA, Washington, DC. (January 30, 1987).

(61) Nelson, B.K., Brightwell, W.S., Setzer, J.V., Taylor, B.J., Hornung, R.W. "Ethoxyethanol behavioral teratology in rats." *Neurotoxicology*. 2:231–249. (1981).

(62) USEPA. "Evaluation of TSCA guidelines for neurotoxicity testing." Regulatory Impacts Branch, Office of Toxic Substances, USEPA, Washington, DC. (April 14, 1987).

(63) The Dow Chemical Co., Health and Environmental Sciences-Texas, Lake Jackson Research Center, Freeport, TX. "Evaluation of diethylene glycol monobutyl ether in the mouse bone marrow micronucleus test." (August 1987).

(64) The Dow Chemical Co., Health and Environmental Sciences-Texas, Lake Jackson Research Center, Freeport, TX. "Evaluation of diethylene glycol monobutyl ether in the Chinese hamster ovary cell/hypoxanthine-guanine-phosphoribosyl transferase (CHO/HGPRT) forward mutation assay." (August 1987).

(65) USEPA. "Review of mutagenicity testing results on Diethylene glycol butyl ether (DGBE)." Intraagency memo from Penelope A. Fenner-Crisp, Health and Environmental Review Division, to Gary E. Timm, Test Rules Development Branch, Office of Toxic Substances, USEPA, Washington, DC. (October 1, 1987).

(66) Research and Evaluation Associates, Inc., Chapel Hill, NC. "Review of Dow Chemical's report on their evaluation of the mutagenicity of diethylene glycol monobutyl ether (DGBE)." (September 28, 1987).

(67) USEPA. "Diethylene glycol butyl ether (DGBE) and diethylene glycol butyl ether acetate (DGBA) test rule." Intraagency memo from Tina Levine, Science Integration Staff, to Gary Timm, Test Rules Development Branch, Office of Toxic Substances, USEPA, Washington, DC. (October 2, 1987).

(68) Hafez, E.S., ed., "Reproduction and Breeding Techniques for Laboratory Animals." Chapter 10. Philadelphia: Lea & Febiger (1970).

Confidential business information (CBI), while part of the record, is not available for public review. A public version of the record, from which CBI has been deleted, is available for inspection in the OPTS Reading Rm. NE–G004, 401 M St. SW., Washington, DC, from 8 a.m. to 4 p.m., Monday through Friday, except legal holidays.

VII. Other Regulatory Requirements

A. Executive Order 12291

Under Executive Order 12291, EPA must judge whether a rule is "major" and therefore subject to the requirement of a Regulatory Impact Analysis. EPA has determined that the DGBE/DGBA test rule is not major because it does not meet any of the criteria set forth in section 1(b) of the Order, i.e., it will not have an annual effect on the economy of at least $100 million, will not cause a major increase in costs or prices, and will not have a significant adverse effect on competition or the ability of U.S. enterprises to compete with foreign enterprises.

This rule was submitted to the Office of Management and Budget (OMB) for review as required by Executive Order 12291. Any written comments from OMB to EPA, and any EPA response to those comments, are included in the rulemaking record.

B. Regulatory Flexibility Act

Under the Regulatory Flexibility Act (5 U.S.C. 601 *et seq.*, Pub. L. 96–354, September 19, 1980), EPA is certifying that the DGBE/DGBA test rule will not have a significant impact on a substantial number of small businesses because: (1) They are not likely to perform testing themselves, or to participate in the organization of the testing effort; (2) they will experience only very minor costs, if any, in securing exemption from testing requirements; and (3) they are unlikely to be affected by reimbursement requirements.

C. Paperwork Reduction Act

OMB has approved the information collection requirements contained in the final rule under the provisions of the Paperwork Reduction Act of 1980 (44 U.S.C. 3501 *et seq.*, Pub. L. 96–511, December 11, 1980), and has assigned OMB control number 2070–0033.

List of Subjects in 40 CFR Parts 795 and 799

Chemicals, Environmental protection, Hazardous substances, Testing, Laboratories, Provisional testing, Recordkeeping and reporting requirements.

Dated: February 11, 1988.

J.A. Moore,

Assistant Administrator for Pesticides and Toxic Substances.

Therefore, 40 CFR Chapter I is amended as follows:

PART 795—[AMENDED]

1. In Part 795:

a. The authority citation for Part 795 continues to read as follows:

Authority: 15 U.S.C. 2603.

b. Section 795.225 is added to Subpart D to read as follows:

§ 795.225 Dermal pharmacokinetics of DGBE and DGBA.

(a) *Purpose.* The purpose of these studies is to determine:

(1) The absorption of diethylene glycol butyl ether (DGBE) after administration by the dermal route.

(2) The biotransformation of DGBE administered dermally.

(3) The dermal absorption of DGBE and diethylene glycol butyl ether acetate (DGBA).

(b) *Test procedures*—(1) *Animal selection*—(i) *Species.* The species utilized for investigating DGBE and DGBA shall be the rat, a species for which historical data on the toxicity and carcinogenicity of many compounds are available and which is used extensively in percutaneous absorption studies.

(ii) *Animals.* Adult female Sprague Dawley rats shall be used. The rats shall be 7 to 8 weeks old and weigh 180 to 220 grams. Prior to testing, the animals shall be selected at random for each group. Animals showing signs of ill health shall not be used.

(iii) *Animal care.* (A) The animals should be housed in environmentally controlled rooms with 10 to 15 air changes per hour. The rooms should be maintained at a temperature of 25 ± 2°C and humidity of 50 ±10 percent with a 12-hour light/dark cycle per day. The rats should be isolated for at least 7 days prior to use.

(B) During the acclimatization period, the rats should be housed in cages on hardwood chip bedding. All animals shall be provided with conventional laboratory diets and water ad libitum.

(2) *Administration of DGBE and DGBA*—(i) *Test substances.* These studies require the use of ^{14}C-labeled DGBE and DGBA. The use of ^{14}C-DGBE and ^{14}C-DGBA is required for the determinations in paragraph (a)(1), (2), and (3) of this section because they will facilitate the work and improve the reliability of quantitative determinations.

(ii) *Dosage and treatment.* (A) Two doses shall be used in the study, a "low" dose and a "high" dose. When administered dermally, the "high" dose level should ideally induce some overt toxicity such as weight loss. The "low" dose level should correspond to a no observed effect level.

(B) For dermal treatment, the doses shall be applied in a volume adequate to deliver the prescribed doses. The backs of the rats should be lightly shaved with an electric clipper shortly before treatment. The dose shall be applied with a micropipette on a specific area (for example, 2 cm^2) on the freshly shaven skin. The dosed areas shall be occluded with an aluminium foil patch which is secured in place with adhesive tape.

(iii) *Washing efficiency study.* Before initiation of the dermal absorption studies described in paragraph (b)(2)(iv)(A) of this section, an initial washing efficiency experiment shall be performed to assess the extent of removal of the applied DGBE and DGBA by washing with soap and water. Groups of four rats should be lightly anesthetized with sodium pentobarbital. These animals shall then be treated with dermal doses of test substance at the low dose level. Soon after application (5 to 10 minutes) the treated animals shall be washed with soap and water then housed in individual metabolism cages for excreta collection. Urine and feces shall be collected at 8, 24, and 48 hours following dosing. Collection of excreta shall continue every 24 hours if a significant amounts of DGBE, DGBA, or metabolites continue to be eliminated.

(iv) *Determination of absorption, biotransformation, and excretion.* (A) Eight animals shall be dosed once dermally with the low dose of ^{14}C-DGBE.

(B) Eight animals shall be dosed once dermally with the high dose of ^{14}C-DGBE.

(C) Eight animals shall be dosed once dermally with the low dose of ^{14}C-DGBA.

(D) Eight animals shall be dosed once dermally with the high dose of ^{14}C-DGBA.

(E) The high and low doses of ^{14}C-DGBE and ^{14}C-DGBA shall be kept on the skin for the duration of the study (96 hours). After application, the animals shall be placed in metabolism cages for excreta collection. Urine and feces shall be collected at 8, 24, 48, 72 and 96 hours after dosing, and if necessary, daily thereafter until at least 90 percent of the dose has been excreted or until 7 days after dosing (whichever occurs first).

(3) *Observation of animals*—(i) *Urinary and fecal excretion.* The quantities of total ^{14}C excreted in urine and feces by rats dosed as specified in paragraph (b)(2)(iv) of this section shall be determined at 8, 24, 48, 72 and 96 hours after dosing, and if necessary, daily thereafter until at least 90 percent of the dose has been excreted or until 7 days after dosing (whichever occurs first). Four animals from each group shall be used for this purpose.

(ii) *Biotransformation after dermal dosing.* Appropriate qualitative and quantitative methods shall be used to assay urine specimens collected from rats dosed with DGBE as specified in paragraph (b)(2)(iv) of this section. Any metabolite which comprises greater than 10 percent of the dose shall be identified.

(c) *Data and reporting*—(1) *Treatment of results.* Data shall be summarized in tabular form.

(2) *Evaluation of results.* All observed results, quantitative or incidental, shall be evaluated by an appropriate statistical method.

(3) *Test report.* In addition to the reporting requirements as specified in the TSCA Good Laboratory Practice Standards, in Part 792, Subpart J of this chapter, the following specific information shall be reported:

(i) Species, strain, and supplier of laboratory animals.

(ii) Information on the degree (i.e., specific activity for a radiolabel) and sites of labeling of the test substances.

(iii) A full description of the sensitivity and precision of all procedures used to produce the data.

(iv) Relative percent absorption by the dermal route for rats administered low and high doses of ^{14}C-DGBE and ^{14}C-DGBA.

(v) Quantity of isotope, together with percent recovery of the administered dose, in feces and urine.

(vi) Biotransformation pathways and quantities of DGBE and metabolites in urine collected after administering single high and low dermal doses to rats.

c. Section 795.250 is added to Subpart D, to read as follows:

§ 795.250 Developmental neurotoxicity screen.

(a) *Purpose.* In the assessment and evaluation of the toxic characteristics of a chemical, it is important to determine when acceptable exposures in the adult may not be acceptable to a developing organism. This test is designed to provide information on the potential functional and morphologic hazards to the nervous system which may arise in the offspring from exposure of the mother during pregnancy and lactation.

(b) *Principle of the test method.* The test substance is administered to several groups of pregnant animals during gestation and lactation, one dose level being used per group. Offspring are randomly selected from within litters for neurotoxicity evaluation. The evaluation includes observation to detect gross neurological and behavioral abnormalities, determination of motor activity, neuropathological evaluation, and brain weights. Measurements are carried out periodically during both postnatal development and adulthood.

(c) *Test procedures*—(1) *Animal selection*—(i) *Species and strain.* Testing should be performed in the Sprague Dawley rat.

(ii) *Age.* Young adult animals (nulliparous females) shall be used.

(iii) *Sex.* Pregnant females shall be used at each dose level.

(iv) *Number of animals.* The objective is for a sufficient number of pregnant rats to be exposed to ensure that an adequate number of offspring are produced for neurotoxicity evaluation. At least 20 litters are recommended at each dose level. This number assumes a coefficient of variation of 20 to 25 percent for most behavioral tests. If, based upon experience with historical control data or data for positive controls in a given laboratory, the coefficient of variation for a given task is higher than 20 to 25 percent, then calculation of appropriate sample sizes to detect a 20 percent change from control values with 80 percent power would need to be done. For most designs, calculations can be made according to Dixon and Massey (1957) under paragraph (e)(5) of this section, Neter and Wasserman (1974) under paragraph (e)(10) of this section, Sokal and Rohlf (1969) under paragraph (e)(11) of this section, or Jensen (1972) under paragraph (e)(8) of this section.

(A) On day 4 after birth, the size of each litter should be adjusted by eliminating extra pups by random selection to yield, as nearly as possible, 4 males and 4 females per litter. Whenever the number of male or female pups prevents having 4 of each sex per litter, partial adjustment (for example, 5 males and 3 females) is permitted. Adjustments are not appropriate for litters of less than 8 pups. Elimination of runts only is not appropriate. Individual pups should be identified uniquely after standardization of litters. A method that may be used can be found in Adams et al. (1985) under paragraph (e)(1) of this section.

(B) After standardization of litters, males and females shall be randomly assigned to one of each of three behavioral tasks. Alternatively, more than one of the behavioral tasks may be conducted in the same animal. In the

latter case, a minimum of 1 to 2 days should separate the tests when conducted at about the same age.

(C) One male and one female shall be randomly selected from each litter for sacrifice at weaning as specified in paragraph (c)(8) of this section.

(2) *Control group.* A concurrent control group shall be used. This group shall be a sham treated group, or, if a vehicle is used in administering the test substance, a vehicle control group. Animals in the control groups shall be handled in an identical manner to test group animals. The vehicle shall neither be developmentally toxic nor have effects on reproduction.

(3) *Dose levels and dose selection.* (i) At least 3 dose levels plus a control (vehicle control, if a vehicle is used) shall be used.

(ii) If the substance has been shown to be developmentally toxic either in a standard developmental toxicity study or a pilot study, the highest dose level shall be the maximum dose which will not induce *in utero* or neonatal deaths or malformations sufficient to preclude a meaningful evaluation of neurotoxicity.

(iii) In the absence of standard developmental toxicity, unless limited by the physicochemical nature or biologicial properties of the substance, the highest dose level shall induce some overt maternal toxicity but shall not result in a reduction in weight gain exceeding 20 percent during gestation and lactation.

(iv) The lowest dose should not produce any grossly observable evidence of either maternal or developmental neurotoxicity.

(v) The intermediate dose(s) shall be equally spaced between the highest and lowest dose.

(4) *Dosing period.* Day 0 in the test is the day on which a vaginal plug and/or sperm are observed. The dose period shall cover the period from day 6 of gestation through weaning (21 days postnatally).

(5) *Administration of test substance.* The test substance or vehicle should be administered orally by intubation. The test substance shall be administered at the same time each day. The animals shall be weighed periodically and the dosage based on the most recent weight determination.

(6) *Observation of dams.* (i) A gross examination of the dams shall be made at least once each day, before daily treatment. The animals shall be observed by trained technicians who are blind with respect to the animal's treatment, using standardized procedures to maximize inter-observer reliability. Where possible, it is advisable that the same observer be used to evaluate the animals in a given study. If this is not possible, some demonstration of inter-observer reliability is required.

(ii) During the treatment and observation periods, cage-side observations shall include:

(A) Any responses with respect to body position, activity level, coordination of movement, and gait.

(B) Any unusual or bizarre behavior including, but not limited to headflicking, head searching, compulsive biting or licking, self-mutilation, circling, and walking backwards.

(C) The presence of:

(*1*) Convulsions.

(*2*) Tremors.

(*3*) Increased levels of lacrimation and/or red-colored tears.

(*4*) Increased levels of salivation.

(*5*) Piloerection.

(*6*) Pupillary dilation or constriction.

(*7*) Unusual respiration (shallow, labored, dyspneic, gasping, and retching) and/or mouth breathing.

(*8*) Diarrhea.

(*9*) Excessive or diminished urination.

(*10*) Vocalization.

(iii) Signs of toxicity shall be recorded as they are observed, including the time of onset, the degree and duration.

(iv) Animals shall be weighed at least weekly.

(v) The day of delivery of litters shall be recorded.

(7) *Study conduct*—(i) *Observation of offspring.* (A) All offspring shall be examined cage-side daily for gross signs of mortality and morbidity.

(B) All offspring shall be examined outside the cage for gross signs of toxicity whenever they are weighed or removed from their cages for behavioral testing. The offspring shall be observed by trained technicians, who are blind with respect to the animal's treatment using standardized procedures to maximize inter-observer reliability. Where possible, it is advisable that the same observer be used to evaluate the animals in a given study. If this is not possible, some demonstration of inter-observer reliability is required. At a minimum, the end points outlined in paragraph (c)(6)(ii) of this section shall be monitored as appropriate for the developmental stage being observed.

(C) Any gross signs of toxicity in the offspring shall be recorded as they are observed, including the time of onset, the degree, and duration.

(ii) *Developmental landmarks.* Live pups should be counted and litters weighed by weighing each individual pup at birth, or soon thereafter, and on days 4, 7, 13, 17, and 21, and biweekly thereafter. The age of the pups at the time of the appearance of the following developmental landmarks shall be determined:

(A) *Vaginal opening.* General procedure for this determination may be found in Adams et al. (1985) under paragraph (e)(1) of this section.

(B) *Testes descent.* General procedure for this determination may be found in Adams et al. (1985) under paragraph (e)(1) of this section.

(iii) *Motor activity.* (A) Motor activity shall be monitored specifically on days 13, 17, 21, 45 (±2 days), and 60 (±2 days). Motor activity shall be monitored by an automated activity recording apparatus. The device used shall be capable of detecting both increases and decreases in activity, i.e., baseline activity as measured by the device shall not be so low as to preclude decreases nor so high as to preclude increases. Each device shall be tested by standard procedures to ensure, to the extent possible, reliability of operation across devices and testing of animals within dose groups shall be balanced across devices.

(B) Each animal shall be tested individually. The test session shall be long enough to demonstrate habituation of motor activity in control animals, i.e., to approach asymptotic levels by the last 20 percent of the session. Animals' activity counts shall be collected in equal time periods of no greater than 10 minutes duration. All sessions shall have the same duration. Treatment groups shall be counter-balanced across test times.

(C) Efforts shall be made to ensure that variations in the test conditions are minimal and are not systematically related to treatment. Among the variables which can affect motor activity are sound level, size, and shape of the test cage, temperature, relative humidity, lighting conditions, odors, use of home cage or novel test cage, and environmental distractions.

(D) Additional information on the conduct of a motor activity study may be obtained in the TSCA motor activity guideline, in § 798.6200 of this chapter.

(iv) *Auditory startle test.* An auditory startle habituation test shall be performed on the offspring on days 22 and 60. Details on the conduct of this testing may be obtained in Adams et al. (1985) under paragraph (e)(1) of this section. In performing the auditory startle task, the mean response amplitude on each block of 10 trials (5 blocks of 10 trials per session on each day of testing) shall be made. While use of pre-pulse inhibition is not a requirement, it may be used at the discretion of the investigator. Details on

the conduct of this testing may be obtained from Ison (1984) under paragraph (e)(7) of this section.

(v) *Active avoidance test.* Active avoidance testing shall be conducted beginning at 60 to 61 days of age. Details on the apparatus may be obtained in Brush and Knaff (1959) and on the conduct of testing from Brush (1962), under paragraphs (e)(4) and (e)(2) of this section, respectively; reviews on active avoidance conditioning by Brush (1971) and McAllister and McAllister (1971) can be found under paragraphs (e)(3) and (e)(9) of this section, respectively. In performing the active avoidance task, the following measures should be made:

(A) Mean number of shuttles during the adaptation period preceding each daily session.

(B) Mean number and latency of avoidances per session, presented in blocks of 10 trials (2 blocks of 10 trials per session across 5 sessions).

(C) Mean number and latency of escapes per session, presented in blocks of 10 trials as above.

(D) Mean duration of shocks per session, presented in blocks of 10 trials as above.

(E) Mean number of shuttles during the inter-trial intervals.

(8) *Post-mortem evaluation*—(i) *Age of animals.* One male and one female per litter shall be sacrificed at weaning and the remainder following the last behavioral measures. Neuropathology and brain weight determinations shall be made on animals sacrificed at weaning and after the last behavioral measures.

(ii) *Neuropathology.* Details for the conduct of neuropathology evaluation may be obtained in the TSCA neuropathology guideline, in § 798.6400 of this chapter. At least 6 offspring per dose group shall be randomly selected from each sacrificed group (weaning and adulthood) for neuropathologic evaluation. These animals shall be balanced across litters, and equal numbers of males and females shall be used. The remaining sacrificed animals shall be used to determine brain weight. Animals shall be perfused *in situ* by a generally recognized technique. After perfusion, the brain and spinal cord shall be removed and gross abnormalities noted. Cross-sections of the following areas shall be examined: The forebrain, the center of the cerebrum and midbrain, the cerebellum and pons, and the medulla oblongata; the spinal cord at cervical and lumbar swelling; Gasserian ganglia, dorsal root ganglia, dorsal and ventral root fibers, proximal sciatic nerve (mid-thigh and sciatic notch), sural nerve (at knee), and tibial nerve (at knee). Tissue samples from both the central and peripheral nervous system shall be further immersion-fixed and stored in appropriate fixative for further examination. After dehydration, tissue specimens shall be cleared with xylene and embedded in paraffin or paraplast except for the sural nerve which should be embedded in plastic. A method for plastic embedding is described by Spencer et al. under paragraph (e)(12) of this section. Tissue sections shall be prepared from the tissue blocks. The following general testing sequence is recommended for gathering histopathological data:

(A) *General staining.* A general staining procedure shall be performed on all tissue specimens in the highest treatment group. Hematoxylin and eosin (H&E) shall be used for this purpose. The staining shall be differentiated properly to achieve bluish nuclei with pinkish background.

(B) *Special stains.* Based on the results of the general staining, selected sites and cellular components shall be further evaluated by use of specific techniques. If H&E screening does not provide such information, a battery of stains shall be used to assess the following components in all appropriate required samples: Neuronal body (e.g., Einarson's gallocyanin), axon (e.g., Kluver's Luxol Fast Blue), and neurofibrils (e.g., Bielchosky). In addition, nerve fiber teasing shall be used. A section of normal tissue shall be included in each staining to assure that adequate staining has occurred. Any changes shall be noted and representative photographs shall be taken. If lesions are observed, the special techniques shall be repeated in the next lower treatment group until no further lesions are detectable.

(C) *Alternative technique.* If the anatomical locus of expected neuropathology is well-defined, epoxy-embedded sections stained with toluidine blue may be used for small sized tissue samples. This technique obviates the need for special stains.

(iii) *Brain weight.* At least 10 animals that are not sacrificed for histopathology shall be used to determine brain weight. The animals shall be decapitated and the brains carefully removed, blotted, chilled, and weighed. The following dissection shall be performed on an ice-cooled glass plate: First, the rhombencephalon is separated by a transverse section from the rest of the brain and dissected into the cerebellum and the medulla oblongata/pons. A transverse section is made at the level of the "optic chiasma" which delimits the anterior part of the hypothalamus and passes through the anterior commissure. The cortex is peeled from the posterior section and added to the anterior section. This divides the brain into four sections, the telencephalon, the diencephalon/mid-brain, the medulla oblongata/pons, and the cerebellum. Sections shall be weighed as soon as possible after dissection to avoid drying. Detailed methodology is available in Glowinski and Iversen (1966) under paragraph (e)(6) of this section.

(d) *Data reporting and evaluation.* In addition to the reporting requirements specified in Part 792, Subpart J of this chapter, the final test report shall include the following information.

(1) *Description of system and test methods.* (i) A detailed description of the procedures used to standardize observation and operational definitions for scoring observations.

(ii) Positive control data from the laboratory performing the test that demonstrate the sensitivity of the procedures being used. These data do not have to be from studies using prenatal exposures. However, the laboratory must demonstrate competence in testing neonatal animals perinatally exposed to chemicals and establish test norms for the appropriate age group.

(iii) Procedures for calibrating and assuring the equivalence of devices and balancing treatment groups.

(iv) A short justification explaining any decisions where professional judgement is involved such as fixation technique and choice of stains.

(2) *Results.* The following information shall be arranged by test group dose level.

(i) In tabular form, data for each animal shall be provided showing:

(A) Its identification number and litter from which it came.

(B) Its body weight and score on each developmental landmark at each observation time; total session activity counts and intrasession subtotals on each day measured; auditory startle response magnitude session counts and intrasession subtotals on each day measured; avoidance session counts and intrasession counts on each day measured; time and cause of death (if appropriate); locations, nature or frequency, and severity of the lesions; total brain weight; absolute weight of each of the four sections; and weight of each section as a percentage of total brain weight. A commonly used scale such as 1+, 2+, 3+, and 4+ for degree of severity of lesions ranging from very slight to extensive may be used for morphologic evaluation. Any diagnoses derived from neurologic signs and lesions, including naturally occurring

diseases or conditions, shall also be recorded.

(ii) Summary data for each group shall include:

(A) The number of animals at the start of the test.

(B) Body weights of the dams during gestation and lactation.

(C) Litter size and mean weight at birth.

(D) The number of animals showing each observation score at each observation time.

(E) The percentage of animals showing each abnormal sign at each observation time.

(F) The mean and standard deviation for each continuous end point at each observation time. These will include body weight, motor activity counts, acoustic startle responses, performance in active avoidance tests, and brain weights (both absolute and relative).

(G) The number of animals in which any lesion was found.

(H) The number of animals affected by each different type of lesion, the average grade of each type of lesion, and the frequency of each different type and/or location of lesions.

(3) *Evaluation of data.* An evaluation of the test results shall be made. The evaluation shall include the relationship between the doses of the test substance and the presence or absence, incidence, and severity of any neurotoxic effect. The evaluation shall include appropriate statistical analyses. The choice of analyses shall consider tests appropriate to the experimental design and needed adjustments for multiple comparisons.

(e) *References.* For additional background information on this test guideline, the following references should be consulted:

(1) Adams, J., Buelke-Sam, J., Kimmel, C.A., Nelson, C.J., Reiter, L.W., Sobotka, T.J., Tilson, H.A., and Nelson, B.K. "Collaborative behavioral teratology study: Protocol design and testing procedure." *Neurobehavioral Toxicology and Teratology.* 7: 579–586. (1985).

(2) Brush, F.R. "The effects of inter-trial interval on avoidance learning in the rat." *Journal of Comparative Physiology and Psychology.* 55: 888–892. (1962).

(3) Brush, F.R. "Retention of aversively motivated behavior." In: "Adverse Conditioning and Learning." Brush, F.R., ed., New York: Academic Press. (1971).

(4) Brush, F.R. and Knaff, P.R. "A device for detecting and controlling automatic programming of avoidance-conditioning in a shuttle-box." *American Journal of Psychology.* 72: 275–278 (1959).

(5) Dixon, W.J. and Massey, E.J. "Introduction to Statistical Analysis." 2nd ed. New York: McGraw-Hill. (1957).

(6) Glowinski, J. and Iversen, L.L. "Regional studies of catecholamines in the rat brain-I." *Journal of Neurochemistry.* 13: 655–669. (1966).

(7) Ison, J.R. "Reflex modification as an objective test for sensory processing following toxicant exposure." *Neurobehavioral Toxicology and Teratology.* 6: 437–445. (1984).

(8) Jensen, D.R. "Some simultaneous multivariate procedures using Hotelling's T2 Statistics." *Biometrics.* 28: 39–53. (1972).

(9) McAllister, W.R. and McAllister, D.E. "Behavioral measurement of conditioned fear." In: "Adverse Conditioning and Learning." Brush, F.R., ed., New York: Academic Press (1971).

(10) Neter, J. and Wasserman, W. "Applied Linear Statistical Models." Homewood: Richard D. Irwin, Inc. (1974).

(11) Sokal, R.P. and Rohlf, E.J. "Biometry." San Francisco: W.H. Freeman and Co. (1969).

(12) Spencer, P.S., Bischoff, M.C., and Schaumburg, H.H., "Neuropathological methods for the detection of neurotoxic disease." In: "Experimental and Clinical Neurotoxicology." Spencer, P.S. and Schaumburg, H.H., eds., Baltimore, MD: Williams & Wilkins, pp. 743–757. (1980).

PART 799—[AMENDED]

2. In Part 799:

a. The authority citation for Part 799 continues to read as follows:

Authority: 15 U.S.C. 2603, 2611, 2625.

b. Section 799.1560 is added to read as follows:

§ 799.1560 Diethylene glycol butyl ether and diethylene glycol butyl ether acetate.

(a) *Identification of test substances.* (1) Diethylene glycol butyl ether (DGBE), CAS Number 112–34–5, and diethylene glycol butyl ether acetate (DGBA), CAS Number 124–17–4, shall be tested in accordance with this section.

(2) DGBE of at least 95 percent purity and DGBA of at least 95 percent purity shall be used as the test substances.

(b) *Persons required to submit study plans, conduct tests, and submit data.* All persons who manufacture (including import) or process or intend to manufacture or process DGBE and/or DGBA, other than as an impurity, after April 11, 1988, to the end of the reimbursement period shall submit letters of intent to conduct testing, submit study plans and conduct tests, and submit data, or submit exemption applications as specified in this section, Subpart A of this Part, and Parts 790 and 792 of this chapter for single-phase rulemaking. Persons who manufacture or process DGBE are subject to the requirements to test DGBE in this section. Only persons who manufacture or process DGBA are subject to the requirements to test DGBA in this section.

(c) *Health effects testing*—(1) *Subchronic toxicity*—(i) *Required testing.* (A) A 90-day subchronic toxicity test of DGBE shall be conducted in rats by dermal application in accordance with § 798.2250 of this chapter except for the provisions in paragraphs (e)(9)(iv), (10)(i)(A) and (ii)(B), (11) (ii) and (iii), and (12)(i) of § 798.2250.

(B) For the purpose of this section, the following provisions also apply:

(*1*) A satellite group to evaluate fertility shall be established. Control males shall be cohabited with control females, and males and females administered the high dose shall be cohabited. Endpoints to be evaluated shall include percent mated; percent pregnant; length of gestation; litter size; viability at birth, on Day 4, and weaning, on Day 21; sex of the offspring; and litter weights at birth and Days 4, 7, 14, and 21. Litters shall be standardized on day 4 in accordance with the reproductive and fertility effects guideline, § 798.4700(c)(6)(iv) of this chapter. Gross examinations shall be made at least once each day and physical or behavioral anomalies in the dam or offspring shall be recorded. At weaning, dams shall be sacrificed and examined for resorption sites indicative of post-implantation loss. An additional 20 males and 40 females will have to be added to the subchronic study for this test. If the animals in the high dose group exhibit marked toxicity (e.g. greater than 20 percent weight loss), then the fertility tests shall be conducted in the next highest dose group.

(*2*) Cage-side observations shall include, but not be limited to, changes in skin and fur; eyes and mucous membranes; respiratory, circulatory autonomic, and central nervous systems; somatomotor activity; and behavior pattern. In addition a daily examination for hematuria shall be done.

(*3*) Certain hematology determinations shall be carried out at least three times during the test period: Just prior to initiation of dosing (baseline data), after approximately 30 days on test, and just prior to terminal sacrifice at the end of the test period. Hematology determinations which are appropriate to all studies: Hematocrit, hemoglobin concentration, erythrocyte count, total

and differential leucocyte count, mean corpuscular volume, and a platelet count.

(*4*) Urinalyses shall be done at least three times during the test period: Just prior to initiation of dosing (baseline data), after approximately 30 days into the test, and just prior to terminal sacrifice at the end of the test period. The animals shall be kept in metabolism cages, and the urine shall be examined microscopically for the presence of erythrocytes and renal tubular cells, in addition to measurement of urine volume, specific gravity, glucose, protein/albumin, and blood.

(*5*) The liver, kidney, adrenals, brain, gonads, prostate gland, epididymides, seminal vesicles, and pituitary gland shall be weighed wet, as soon as possible after dissection, to avoid drying.

(*6*) The following organs and tissues, or representative samples thereof, shall be preserved in a suitable medium for possible future histopathological examination: All gross lesions; lungs—which should be removed intact, weighed, and treated with a suitable fixative to ensure that lung structure is maintained (perfusion with the fixative is considered to be an effective procedure); nasopharyngeal tissues; brain—including sections of medulla/pons, cerebellar cortex, and cerebral cortex; pituitary; thyroid/parathyroid; thymus; trachea; heart; sternum with bone marrow; salivary glands; liver; spleen; kidneys; adrenals; pancreas; gonads; uterus; oviducts; vagina; vas deferens; accessory genital organs (epididymis, prostate, and, if present, seminal vesicles); aorta; (skin); gall bladder (if present); esophagus; stomach; duodenum; jejunum; ileum; cecum; colon; rectum; urinary bladder; representative lymph node; (mammary gland); (thigh musculature); peripheral nerve; (eyes); (femur—including articular surface); (spinal cord at three levels—cervical, midthoracic, and lumbar); and (zymbal and exorbital lachrymal glands).

(*7*) (*i*) Full histopathology on normal and treated skin and on organs and tissues listed in paragraph (c)(1)(i)(B)(*6*) of this section, as well as the accessory genital organs (epididymides, prostate, seminal vesicles) and the vagina, of all animals in the control and high dose groups.

(*ii*) The integrity of the various cell stages of spermatogenesis shall be determined, with particular attention directed toward achieving optimal quality in the fixation and embedding; preparations of testicular and associated reproductive organ samples for histology should follow the recommendations of Lamb and Chapin (1985) under paragraph (d)(1) of this section, or an equivalent procedure. Histological analyses shall include evaluations of the spermatogenic cycle, i.e., the presence and integrity of the 14 cell stages. These evaluations should follow the guidance provided by Clermont and Perey (1957) under paragraph (d)(2) of this section. Information shall also be provided regarding the nature and level of lesions observed in control animals for comparative purposes.

(*iii*) Data on female cyclicity shall be obtained by performing vaginal cytology over the last 2 weeks of dosing; the cell staging technique of Sadleir (1978) and the vaginal smear method in Hafez (1970) under paragraphs (d) (3) and (7) of this section or equivalent methods should be used. Data should be provided on whether the animal is cycling and the cycle length.

(*iv*) The ovary shall be serially sectioned with a sufficient number of sections examined to adequately detail oocyte and follicular morphology. The methods of Mattison and Thorgiersson (1979) and Pederson and Peters (1968) under paragraphs (d) (4) and (5) of this section may provide guidance. The strategy for sectioning and evaluation is left to the discretion of the investigator, but shall be described in detail in the study plan and final report. The nature and background level of lesions in control tissue shall also be noted.

(ii) *Reporting requirements.* (A) The subchronic test shall be completed and the final report submitted to EPA within 15 months of the effective date of the final test rule.

(B) Progress reports shall be submitted to EPA every 6 months, beginning 6 months from the effective date of the final rule until submission of the final report to EPA.

(2) *Neurotoxicity/behavioral effects*—(i) *Required testing*—(A) (*1*) *Functional observational battery.* A functional observational battery shall be performed in the rat by dermal application of DGBE for a period of 90 days according to § 798.6050 of this chapter except for the provisions in paragraphs (b)(1), (d)(4)(ii), (5), and (8)(ii)(E) of § 798.6050.

(*2*) For the purpose of this section, the following provisions also apply:

(*i*) *Definition.* Neurotoxicity is any adverse acute and/or lasting effect on the structure or function of the central and/or peripheral nervous system related to exposure to a chemical substance.

(*ii*) *Lower doses.* The data from the lower doses shall show either graded dose-dependent effects in at least two of all the doses tested including the highest dose, or no neurotoxic (behavioral) effects at any dose tested.

(*iii*) *Duration and frequency of exposure.* Animals shall be exposed for 6 hours/day, 5 days/week for a 90-day period.

(*iv*) *Sensory function.* A simple assessment of sensory function (vision, audition, pain perception) shall be made. Marshall et al. (1971) in § 798.6050(f)(8) of this chapter have described a neurologic exam for this purpose; these procedures are also discussed by Deuel (1977), under § 798.6050(f)(4) of this chapter. Irwin (1968) under § 798.6050(f)(7) of this chapter described a number of reflex tests intended to detect gross sensory deficits. Many procedures have been developed for assessing pain perception (e.g., Ankier (1974) under § 798.6050(f)(1); D'Amour and Smith (1941) under § 798.6050(f)(3); and Evans (1971) under § 798.6050(f)(6) of this chapter.

(B)(*1*) *Motor activity.* A motor activity test shall be conducted in the rat by dermal application of DGBE for a period of 90 days according to § 798.6200 of this chapter except for the provisions in paragraphs (c), (d)(3)(ii), (4)(ii), (5), (8)(i), and (iii) of § 798.6200.

(*2*) For the purpose of this section, the following provisions also apply:

(*i*) *Principle of the test method.* The test substance is administered to several groups of experimental animals, one dose being used per group. Measurements of motor activity are made. Where possible, the exposure levels at which significant changes in motor activity are produced are compared to those levels which produce toxic effects not originating in the central and/or peripheral nervous system.

(*ii*) *Positive control data.* Positive control data are required to document the sensitivity of the activity measuring device and testing procedure. These data should demonstrate the ability to detect increases or decreases in activity and to generate a dose-effect curve or its equivalent using three values of the dose or equivalent independent variable. A single administration of the dose (or equivalent) is sufficient. It is recommended that chemical exposure be used to collect positive control data. Positive control data shall be collected at the time of the test study unless the laboratory can demonstrate the adequacy of historical data for this purpose.

(*iii*) *Lower doses.* The data from the lower doses shall show either graded dose-dependent effects in at least two of

all the doses tested including the highest dose, or no neurotoxic (behavioral) effects at any dose tested.

(*iv*) *Duration and frequency of exposure.* Animals shall be exposed for 6 hours/day, 5 days/week for a 90-day period.

(*v*) *General.* Motor activity shall be monitored by an automated activity recording apparatus. The device used shall be capable of detecting both increases and decreases in activity, i.e. baseline activity as measured by the device shall not be so low as to preclude decreases nor so high as to preclude increases. Each device shall be tested by a standard procedure to ensure, to the extent possible, reliability of operation across devices and across days for any one device. In addition, treatment groups shall be balanced across devices. Each animal shall be tested individually. The test session shall be long enough for motor activity to approach asymptotic levels by the last 20 percent of the session for most treatments and for the session control animals. All sessions should be of the same duration. Treatment groups shall be counter-balanced across test times. Effort should be made to ensure that variations in the test conditions are minimal and are not systematically related to treatment. Among the variables which can affect motor activity are sound level, size and shape of the test cage, temperature, relative humidity, lighting conditions, odors, use of home cage or novel test cage, and environmental distractions. Tests shall be executed by an appropriately trained individual.

(*vi*) *Subchronic.* All animals shall be tested prior to initiation of exposure and at 30±4, 60±4, and 90±4 days during the exposure period. Testing shall occur prior to the daily exposure. Animals shall be weighed on each test day and at least once weekly during the exposure period.

(C)(*1*) *Neuropathology.* A neuropathology test shall be conducted in the rat by dermal application of DGBE for a period of 90 days according to § 798.6400 of this chapter except for the provisions in paragraphs (d)(4)(ii), (5), (8)(iv)(C), and (E)(*2*) of § 798.6400.

(*2*) For the purpose of this section, the following provisions also apply:

(*i*) *Lower doses.* The data from the lower doses shall show either graded dose-dependent effects in at least two of all the doses tested including the highest dose, or no neurotoxic (behavioral) effects at any dose tested.

(*ii*) *Duration and frequency of exposure.* Animals shall be exposed for 6 hours/day, 5 days/week for a 90-day period.

(*iii*) *Clearing and embedding.* After dehydration, tissue specimens shall be cleared with xylene and embedded in paraffin or paraplast except for the sural nerve which should be embedded in plastic. Multiple tissue specimens (e.g. brain, cord, ganglia) may be embedded together in one single block for sectioning. All tissue blocks shall be labeled to provide unequivocal identification. A method for plastic embedding is described by Spencer et al. in paragraph (d)(6) of this section.

(*iv*) *Special stains.* Based on the results of the general staining, selected sites and cellular components shall be further evaluated by the use of specific techniques. If hematoxylin and eosin screening does not provide such information, a battery of stains shall be used to assess the following components in all appropriate required samples: Neuronal body (e.g., Einarson's gallocyanin), axon (e.g., Bodian), myelin sheath (e.g., Kluver's Luxol Fast Blue), and neurofibrils (e.g., Bielchosky). In addition, peripheral nerve fiber teasing may be used. Detailed staining methodology is available in standard histotechnological manuals such as Armed Forces Institute of Pathology (AFIP) (1968) under § 798.6400(f)(1), Ralis et al. (1973) under § 798.6400(f)(5), and Chang (1979) under § 798.6400(f)(2) of this chapter. The nerve fiber teasing technique is discussed in Spencer and Schaumberg (1980) under § 798.6400(f)(6) of this chapter. A section of normal tissue shall be included in each staining to assure that adequate staining has occurred. Any changes shall be noted and representative photographs shall be taken. If a lesion(s) is observed, the special techniques shall be repeated in the next lower treatment group until no further lesion is detectable.

(ii) *Reporting requirements.* (A) The neurotoxicity/behavioral tests required under paragraph (c)(2) of this section shall be completed and the final reports submitted to EPA within 15 months of the effective date of the final rule.

(B) Interim progress reports shall be submitted to EPA at 6-month intervals, beginning 6 months from the effective date of the final rule until submission of the applicable final report to EPA.

(3) *Developmental neurotoxicity*—(i) *Required testing.* A developmental neurotoxicity test of DGBE shall be conducted after a public program review of the Tier I data from the functional observational battery, motor activity, and neuropathology tests in paragraph (c)(2) of this section, and the reproductive tests in paragraph (c)(1) of this section, and if EPA issues a **Federal Register** notice or sends a certified letter to the test sponsor specifying that the testing shall be initiated. The test shall be performed in rats in accordance with § 795.250 of this chapter.

(ii) *Reporting requirements.* (A) The developmental neurotoxicity test shall be completed and the final report submitted to EPA within 15 months of EPA's notification of the test sponsor by certified letter or **Federal Register** notice under paragraph (c)(3)(i) of this section that the testing shall be initiated.

(B) Progress reports shall be submitted to EPA every 6 months, beginning 6 months after the date of notification that the testing shall be initiated, until submission of the final report to EPA.

(4) *Pharmacokinetics*—(i) *Required testing.* Pharmacokinetics tests of DGBE and DGBA will be conducted in rats by the dermal route of administration in accordance with § 795.225 of this chapter.

(ii) *Reporting requirements.* (A) The pharmacokinetics tests shall be completed and the final reports submitted to EPA within 12 months of the effective date of the final rule.

(B) A progress report shall be submitted to EPA 6 months from the effective date of the final rule.

(d) *References.* For additional background information the following references should be consulted:

(1) Lamb, J.C. and Chapin, R.E. "Experimental models of male reproductive toxicology." In: "Endocrine Toxicology." Thomas, J.A., Korach, K.S., and McLachlan, J.A., eds. New York, NY: Raven Press. pp. 85–115. (1985).

(2) Clermont, Y. and Perey, B. "Quantitative study of the cell population of the seminiferous tubules in immature rats." *American Journal of Anatomy.* 100:241–267. (1957).

(3) Sadleir, R.M.F.S. "Cycles and seasons." In: "Reproduction in Mammals: I. Germ Cells and Fertilization." Austin, C.R. and Short, R.V., eds. New York, NY: Cambridge Press. Chapter 4. (1978).

(4) Mattison, D.R. and Thorgiersson, S.S. "Ovarian aryl hydrocarbon hydroxylase activity and primordial oocyte toxicity of polycyclic aromatic hydrocarbons in mice." *Cancer Research.* 39:3471–3475. (1979).

(5) Pederson, T. and Peters, H. "Proposal for classification of oocytes and follicles in the mouse ovary. *Journal of Reproduction and Fertility.* 17:555–557. (1968).

(6) Spencer, P.S., Bischoff, M.C., and Schaumburg, H.H. "Neuropathological methods for the detection of neurotoxic disease." In: "Experimental and Clinical Neurotoxicology." Spencer, P.S. and Schaumburg, H.H., eds. Baltimore, MD: Williams & Wilkins, pp. 743–757. (1980).

(7) Hafez, E.S., ed., "Reproduction and Breeding Techniques for Laboratory Animals." Chapter 10. Philadelphia: Lea & Febiger (1970).

(e) *Effective dates.* (1) The effective date of the final rule shall be April 11, 1988.

(2) The guidelines and other test methods cited in this section are referenced here as they exist on April 11, 1988.

(Information collection requirements have been approved by the Office of Management and Budget under control number 2070-0033)

[FR Doc. 88-4031 Filed 2-25-88; 8:45 am]

BILLING CODE 6560-50-M

Federal Register

Friday
February 26, 1988

Part V

Department of Education

34 CFR Part 538

Transition Program for Refugee Children; Notice of Proposed Rulemaking

DEPARTMENT OF EDUCATION

34 CFR Part 538

Transition Program for Refugee Children

AGENCY: Department of Education.

ACTION: Notice of proposed rulemaking.

SUMMARY: The Secretary proposes to amend regulations for the Transition Program for Refugee Children. This program currently provides financial assistance through grants to State educational agencies and subgrants to local educational agencies to provide special educational services to refugee children enrolled in public and nonprofit private schools. The current regulations were reviewed for regulatory burden reduction. These proposed regulations are issued as a result of that review.

DATES: Comments must be received on or before April 26, 1988.

ADDRESSES: All comments concerning these proposed regulations should be addressed to Alicia Coro, Director, Office of Bilingual Education and Minority Languages Affairs, U.S. Department of Education, 400 Maryland Avenue SW. (Room 421, Reporters Building), Washington, DC 20202.

A copy of any comments that concern information collection requirements should also be sent to the Office of Management and Budget at the address listed in the Paperwork Reduction Act section of this preamble.

FOR FURTHER INFORMATION CONTACT: Mr. Jonathan Chang, Office of Bilingual Education and Minority Languages Affairs, U.S. Department of Education, 400 Maryland Avenue SW. (Room 421, Reporters Building), Washington, DC 20202. Telephone: (202) 245-2609.

SUPPLEMENTARY INFORMATION: The Transition Program for Refugee Children is authorized by the Refugee Act of 1980, 8 U.S.C. 1522(a), (c), (d), as amended by the Refugee Assistance Extension Act of 1986 (Pub. L. 99-605).

Regulations for this program were initially published in the **Federal Register** on January 14, 1981 (46 FR 3380).

The proposed amended regulations would eliminate unnecessary and unused provisions in the existing regulations, simplify application requirements, including information requests, and increase the flexibility of grantees in carrying out program activities.

Sections Changed or Deleted as a Result of Deregulation Review

The proposed regulations change the definition of "eligible children" to conform to the final regulations for the Refugee Resettlement Program issued by the Department of Health and Human Services (HHS) at 51 FR 3904 (January 30, 1986), except that the proposed regulations do not incorporate those sections of the HHS final regulations relating to admission into the United States (U.S.) under provisions of the Immigration and Nationality Act that were effective prior to and were rendered ineffective after the enactment of the Refugee Act of 1980. An additional provision is added to the definition of eligible children specifying that only children who have been admitted into the U.S. for no more than two years at the elementary school level, or no more than three years at the secondary school level, and who are enrolled in elementary or secondary schools, are eligible for this program.

The proposed regulations would establish a definition of "Eligible local educational agency" that requires an LEA to serve at least 20 eligible students in public or nonprofit private schools within the geographic service area under its jurisdiction to qualify for a subgrant from the SEA. This provision is proposed to implement the statutory provision providing funding where a "demonstrated need has been shown" (8 U.S.C. 1522(d)(1)). The Department believes that if an LEA has fewer than 20 eligible students, it does not have a "demonstrated need" for Federal assistance under this program. This provision would increase per-pupil payments by approximately 10 percent in eligible LEAs, and would concentrate funding where it is most needed. While this provision would eliminate a large percentage of those LEAs currently eligible, it would affect only about 10 percent of the students currently served by the program.

To simplify the collection of information and the award of grants and subgrants, the proposed regulations would revise the allocation formula in § 538.31 by deleting the weighting factors and reducing the categories of refugee children to be counted from ten categories to two categories.

To simplify the applications submitted under this program, the proposed amendments would delete requirements in the current § 538.20(b)(2), (c)(1), and (2), that SEAs submit certain assurances and describe services to be provided with assistance received under this program. The deleted assurances and the description are not necessary for the implementation of the program.

To further reduce the application burden, the proposed regulations would permit an SEA's count of refugee children to be taken during a period of time specified by the Secretary instead of on a specific date as is now required.

The proposed regulations would delete § 538.32 which provides the Secretary with emergency funding authority if an SEA experiences a substantial or disproportionate increase in refugee children enrollment after the grants have been awarded. This authority has not been used in the past seven years. It is not anticipated that a sudden influx of refugees that would necessitate use of this funding authority will occur in the foreseeable future.

The proposed regulations would permit an SEA, when an LEA does not apply for a subgrant to serve eligible children enrolled in either public or nonprofit private schools, or both, within the geographic service area under the LEA's jurisdiction, to delete those children in the LEA from its count, or if the LEA has 20 or more eligible children in its district, to arrange through subgrants, contracts, or cooperative agreements with public or nonprofit agencies for the provision of services to the eligible children who would not be served, or to provide services directly to those children.

Sections 538.1(b)(2), 538.2(b), 538.3(d), 538.11, and 538.35 in the current regulations governing the Development and Dissemination Projects Program would be deleted. That discretionary grant program was established in the current regulations so that the Secretary could make funds available for projects that propose to meet the need for instructional materials and techniques used in providing special educational services to refugee children. However, the Secretary has not used this grantmaking authority and does not expect to in the future.

These regulations will have a positive impact on the family and is consistent with the requirements of Executive Order 12606—The Family. These regulations strengthen the authority and participation of parents in the education of their children.

Executive Order 12291

The proposed regulations have been reviewed in accordance with Executive Order 12291. They are not classified as major because they do not meet the criteria for major regulations established in the Order.

Regulatory Flexibility Act Certification

The Secretary certifies that these proposed regulations will not have a significant economic impact on a substantial number of small entities.

To the extent that these regulations affect States and State agencies they will not have an impact on small entities because States and State agencies are not considered small entities under the Act. Small entities participating in the program are small LEAs. These regulations will reduce burdens for small LEAs, but they will not have a significant economic impact on individual LEAs.

Paperwork Reduction Act of 1980

Section 538.20 contains information collection requirements. As required by section 3504(h) of the Paperwork Reduction Act of 1980, the Department of Education will submit a copy of these proposed regulations to the Office of Management and Budget for its review. Organizations and individuals desiring to submit comments on the information collection requirements should direct them to the Office of Information and Regulatory Affairs, OMB, Room 3002, New Executive Office Building, Washington, DC 20503; Attention James Houser.

Intergovernmental Review

This program is subject to the requirements of Executive Order 12372 and the regulations in 34 CFR Part 79. The objective of the Executive Order is to foster an intergovernmental partnership and a strengthened federalism by relying on processes developed by State and local governments for coordination and review of proposed Federal financial assistance.

In accordance with the Order, this document is intended to provide early notification of the Department's specific plans and actions for this program.

Invitation to Comment

Interested persons are invited to submit comments and recommendations regarding these proposed regulations.

All comments submitted in response to these proposed regulations will be available for public inspection, during and after the comment period, in Room 421, Reporters Building, 7th and D Streets SW., Washington, DC, between the hours of 8:30 a.m. and 4:00 p.m., Monday through Friday of each week except Federal holidays.

To assist the Department in complying with the specific requirements of Executive Order 12291 and the Paperwork Reduction Act of 1980 and its overall requirement of reducing regulatory burden, the Secretary invites comments on whether there may be further opportunities to reduce any regulatory burdens found in these proposed regulations.

Assessment of Educational Impact

The Secretary particularly requests comments on whether the proposed regulations in this document would require transmission of information that is being gathered by or is available from any other agency or authority of the United States.

List of Subjects in 34 CFR Part 538

Education, Elementary and secondary education, Grant programs—education, Refugees.

Dated: December 23, 1987.

William J. Bennett,

Secretary of Education.

(Catalog of Federal Domestic Assistance Number 84.146, Transition Program for Refugee Children)

The Secretary proposes to revise Part 538 of Title 34 of the Code of Federal Regulations to read as follows:

PART 538—TRANSITION PROGRAM FOR REFUGEE CHILDREN

Subpart A—General

Sec.
538.1 Transition Program for Refugee Children.
538.2 Who is eligible to apply for a grant under the Transition Program for Refugee Children?
538.3 What regulations apply?
538.4 What definitions apply?

Subpart B—What Kinds of Activities Does the Secretary Assist Under This Program?

538.10 What activities are eligible for grant assistance under the program?

Subpart C—How Does a State Apply for a Grant?

538.20 What documents does the State submit to receive a grant?

Subpart D—How Does the Secretary Make a Grant to a State?

538.30 How does the Secretary review an application submitted by an SEA?
538.31 What formula is used to determine the amount of a grant?

Subpart E—How Does a State Make a Subgrant to an Applicant?

538.40 For what purposes may an LEA apply for a subgrant?
538.41 How does the State determine the amount of a subgrant?

Subpart F—What Conditions Apply to a State and Its Subgrantees Under the Program?

538.50 What should a State do if an LEA does not apply for a subgrant?
538.51 What are the restrictions on costs under this program?
538.52 Under what circumstances may the Secretary arrange for providing services under this program?

Authority: 8 U.S.C. 1522(a), (c), (d), unless otherwise noted.

Subpart A—General

§ 538.1 Transition Program for Refugee Children.

(a) The Transition Program for Refugee Children provides assistance to meet the special educational needs of eligible children who are enrolled in public and nonprofit private elementary and secondary schools.

(b) This program funds formula grants to States based on the number of eligible children in the States.

(Authority: 8 U.S.C. 1522(a), (d))

§ 538.2 Who is eligible to apply for a grant under the Transition Program for Refugee Children?

(a) A State educational agency (SEA) is eligible to apply for a grant to assist eligible local educational agencies (LEAs) in its State in providing special educational services to eligible children, or to assist the SEA in providing those services pursuant to § 538.50, if the State has an approved plan for the administration of refugee resettlement programs in its State on file with the Director of the Office of Refugee Resettlement (ORR) in the Department of Health and Human Services (HHS).

(b) Requirements pertaining to submission and approval of the State plan are contained in 45 CFR Part 400 (Refugee Resettlement Program; Plan and Reporting Requirements for States).

(Authority: 8 U.S.C. 1522(a), (c), (d))

§ 538.3 What regulations apply?

The following regulations apply to the Transition Program for Refugee Children:

(a) The regulations in 34 CFR Part 538.

(b) The Education Department General Administrative Regulations (EDGAR) in 34 CFR Part 74 (Administration of Grants), 34 CFR Part 76 (State-Administered Programs), 34 CFR Part 77 (Definitions That Apply to Department Regulations), 34 CFR Part 78 (Education Appeal Board), and 34 CFR Part 79 (Intergovernmental Review of Education Programs).

(Authority: 8 U.S.C. 1522(d))

§ 538.4 What definitions apply?

(a) *Definitions in EDGAR.* The following terms used in this part are defined in 34 CFR 77.1:

Applicant
Application

Award
EDGAR
Elementary school
Nonprofit
Private
Secondary school
Secretary
State
State educational agency

(b) *Other Definitions.* The following definitions also apply to this part:

"Act" means the Immigration and Nationality Act as amended by the Refugee Act of 1980 (Pub. L. 96-212), 8 U.S.C. 1522 (a), (c), (d).

"Eligible children" means children who—

(1)(i) Are admitted into the United States under section 207 of the Act;

(ii) Are granted asylum in the United States under section 208 of the Act;

(iii) Are paroled into the United States as a refugee or asylee under section 212(d)(5) of the Act; or

(iv) Are admitted for permanent residence in the United States, provided the individual child previously held a status in paragraph (1)(i), (ii), or (iii) of this section;

(2) Are within the age limit for which the applicable State is required or permitted under State law to provide free public elementary and secondary school education for students; and

(3) Have been admitted into the United States for no more than two years at the elementary school level, or for no more than three years at the secondary school level, and who are enrolled in public or nonprofit private elementary or secondary schools.

"Eligible local educational agency" means—

(1) A public board of education or other public authority that will serve at least twenty eligible children who are enrolled in public or nonprofit private schools within the geographic service area under its jurisdiction and is legally constituted within a State for either administrative control of or direction of, or to perform service functions for, public elementary or secondary schools in—

(i) A city, county, township, school district, or other political subdivision of a State; or

(ii) Such combination of school districts or counties a State recognizes as an administrative agency for its public elementary or secondary schools; or

(2) Any other public institution or agency that has administrative control and direction of a public elementary or secondary school and serves a geographic area in which it will serve at least twenty eligible children enrolled in public or nonprofit private schools.

(Authority: 8 U.S.C. 1522 (a), (c), (d))

Subpart B—What Kinds of Activities Does the Secretary Assist Under This Program?

§ 538.10 What activities are eligible for grant assistance under the program?

(a) The following are examples of services that may be provided under this program:

(1) Special supplemental educational services may be provided, with emphasis on instruction to improve English language skills of eligible children, so as to enable those children to achieve and maintain a satisfactory level of academic performance. These services may include—

(i) Testing to determine the educational needs of eligible children;

(ii) Special English language instruction;

(iii) Bilingual education;

(iv) Remedial programs of instruction; and

(v) Special materials and supplies.

(2) Up to 15 percent of the award may be used to provide support services for the eligible children, including but not limited to—

(i) Inservice training for educational personnel to work with eligible children to enable them more effectively to provide services to those children;

(ii) Training for parents of eligible children to enable them to participate more effectively in the education of their children; and

(iii) School counselling and guidance services for eligible children, including referrals to appropriate social and health agencies.

(b) An SEA may use up to one percent of the total funds it receives—

(1) To ensure proper and efficient administration of funds under this program; and

(2) To provide technical assistance to subgrantees and others who are providing services under this program to eligible children.

(c) An eligible LEA may use up to one percent of the total funds it receives for the administration of the program. The remaining funds must be used for the activities under paragraph (a) of this section.

(d) Funds awarded under the program to any State must be used so as to supplement the level of State and local funds that, in the absence of those payments, would have been expended for special programs for eligible children, and in no case to supplant those State and local funds, except that nothing in this paragraph shall preclude a local educational agency from using funds under this part for activities carried out under an order of a court of the United States or of any State respecting services to be provided to eligible children because of their limited English proficiency, as defined in section 703(1) of the Bilingual Education Act (20 U.S.C. 3221 *et seq.*), or to carry out a plan approved by the Secretary as adequate under Title VI of the Civil Rights Act of 1964 with respect to those services for those children.

(Authority: 8 U.S.C. 1522 (a), (d))

Subpart C—How Does a State Apply for a Grant?

§ 538.20 What documents does the State submit to receive a grant?

(a) An SEA shall submit to the Secretary an application containing the following:

(1) A narrative that demonstrates the need for assistance.

(2) A count of the number of eligible children to be served by the program.

(3) The date or dates on which the count was taken.

(4) A program plan that includes—

(i) A brief description of the SEA's method of counting children eligible for assistance under this program; and

(ii) A brief description of the SEA's plan for administering, monitoring, and evaluating the program; and

(iii) A brief description of how the SEA will provide services, if any, to eligible children pursuant to § 538.50.

(b) The Secretary may specify, in a notice published in the **Federal Register**, a period during which the State's count under paragraph (a)(2) of this section must be taken.

(Authority: 8 U.S.C. 1522 (a), (d))

Subpart D—How Does the Secretary Make a Grant to a State?

§ 538.30 How does the Secretary review an application submitted by an SEA?

The Secretary approves an application submitted by an SEA if the application complies with the requirements in this part.

(Authority: 8 U.S.C. 1522 (a), (c), (d))

§ 538.31 What formula is used to determine the amount of a grant?

To determine the amount of a grant to an SEA, the Secretary—

(a) Determines the average per pupil allocation by dividing the total amount of the available funds for grants in a fiscal year by the sum of all eligible children to be served by eligible LEAs or pursuant to § 538.50, counted by SEAs with approved applications; and

(b) Multiplies an SEA's child count by the average per pupil allocation

determined under paragraph (a) of this section.

(Authority: 8 U.S.C. 1522(a), (d))

Subpart E—How Does a State Make a Subgrant to an Applicant?

§ 538.40 For what purposes may an LEA apply for a subgrant?

An eligible LEA may apply to the SEA for a subgrant to provide services to eligible children enrolled in public and nonprofit private schools within its jurisdiction.

(Authority: 8 U.S.C. 1522(a), (d))

§ 538.41 How does the State determine the amount of a subgrant?

In determining the amount of a subgrant to an eligible LEA, the SEA—

(a) Divides the amount of funds available to serve eligible children by the total number of eligible children to be served in the State to determine the amount of funds available for each eligible child; and

(b) Multiplies an eligible LEA's count of eligible children the LEA will serve by the quotient obtained in paragraph (a) of this section.

(Authority: 8 U.S.C. 1522(a), (d))

Subpart F—What Conditions Apply to a State and Its Subgrantees Under the Program?

§ 538.50 What should a State do if an LEA does not apply for a subgrant?

If an LEA does not apply for a subgrant to serve eligible children in either public or nonprofit private schools, or both, within its jurisdiction, the SEA may not include those children in its count of eligible children under § 538.20 of these regulations, unless the LEA has at least 20 eligible children in the geographic area it serves, and the SEA—

(a) Arranges through subgrants, contracts, or cooperative agreements with public and nonprofit agencies, organizations, or institution (which may include institutions of higher education) for the provision of services to the eligible children who would not be served; or

(b) Provides services directly to those children.

(Authority: 8 U.S.C. 1522(a), (d))

§ 538.51 What are the restrictions on costs under this program?

Funds may not be used under this program for—

(a) Construction, repair, remodeling, or alteration of facilities or sites;

(b) Payments of stipends to participants in inservice training or other workshops, including costs of participant travel, meals or lodging associated with this training; or

(c) Payments for the provision of health or social services.

(Authority: 8 U.S.C. 1522(a), (d))

§ 538.52 Under what circumstances may the Secretary arrange for providing services under this program?

If a State is prohibited by law from providing educational services to children enrolled in nonprofit private elementary or secondary schools, or if the Secretary determines that an SEA or eligible LEA is unwilling or has substantially failed to provide educational services on an equitable basis to eligible children enrolled in nonprofit private schools, the Secretary may—

(a) Arrange for other means of providing services to these children; and

(b) Deduct the cost of providing these services, including any administrative costs, from the appropriate SEA grant allocation.

(Authority: 8 U.S.C. 1522(a), (d))

[FR Doc. 88-4134 Filed 2-25-88; 8:45 am]

BILLING CODE 4000-01-M

federal register

Friday
February 26, 1988

Part VI

Department of Agriculture

Cooperative State Research Service

Competitive Research Grants Program for Forest and Rangeland Renewable Resources for Fiscal Year 1988; Solicitation of Applications; Notice

DEPARTMENT OF AGRICULTURE

Cooperative State Research Service

Competitive Research Grants Program for Forest and Rangeland Renewable Resources for Fiscal Year 1988; Solicitation of Applications

Notice is hereby given that pursuant to the authority contained in section 5 of the Forest and Rangeland Renewable Resources Research Act of 1978, as amended (16 U.S.C. 1644), the Cooperative State Research Service (CSRS), United States Department of Agriculture (USDA), anticipates awarding standard project grants for basic research in the areas of forest biology, wood utilization and harvesting. This program will be administered by the CSRS Office of Grants and Program Systems. The total amount expected to be available for grant awards under this program during fiscal year 1988 is approximately $3,000,000. Long-term projects, up to a maximum of five years, will be encouraged. Grants will be awarded by CSRS to the extent that funds are available.

Pursuant to the Secretary's Memorandum 1030-20, dated February 3, 1988, the authority to administer the funds made available by the Continuing Appropriations Act for fiscal year 1988 for a competitive research grants program for forest research, authorized by section 5 of the Forest and Rangeland Renewable Resources Research Act of 1978, has been delegated to the Cooperative State Research Service. Under this authority CSRS may award grants to Federal, State, and other governmental agencies, public or private agencies, institutions, universities, and organizations, and businesses and individuals in the United States. Only proposals from applicants in the United States will be considered for support.

Applicable Regulations

This program is subject to the provisions found at 7 CFR Part 3201 (51 FR 15288, April 22, 1986). These provisions set forth procedures to be followed when submitting grant proposals, rules governing the evaluation of proposals and the awarding of grants, and regulations relating to the post-award administration of grant projects. In addition, USDA Uniform Federal Assistance Regulations, 7 CFR Part 3015, as amended, will apply to this program.

Introduction to Program Description

Standard research grants will be awarded to support basic research in selected areas of (1) processing, harvesting, and utilization of timber resources, with special emphasis on the chemical, mechanical, and engineering properties of wood and wood materials and (2) forest biology, including biotechnology, that are considered by a number of scientific groups to possess exceptional opportunity for fundamental scientific discovery and for contributing, in the long run, to applied research and development vitally needed on important wood utilization and forestry problems. This grants program recognizes that innovative approaches and enhanced levels of funding are essential as we seek ways to improve the economic and environmental value of our forest resources.

Consideration will be given to research proposals that address fundamental questions in the program areas noted below and that are consistent with the long-range missions of USDA. Basic guidelines are provided to assist members of the scientific community in assessing their interest in the program areas and to delineate certain important areas where new information is vitally needed. However, these guidelines are also meant to be flexible and should not detract from the creativity of potential investigators. USDA encourages the submission of innovative projects in the so-called "high-risk" category, as well as those that may have greater probability of success.

Workshops or symposia that bring together scientists to identify research needs, update information, or advance an area of research are recognized as an integral part of research efforts. Support for a limited number of such meetings covering subject matter encompassed by this Competitive Research Grants Program for Forest and Rangeland Renewable Resources will be considered for partial or, if the total cost is modest, complete support. Proposals for workshops or symposia will be due at the same time the other proposals in the subject area are due, and will be evaluated in competition with other proposals in their subject areas.

Individual awards for recent doctoral graduates: USDA encourages individuals, who (1) have earned the doctoral degree in a biological science, physical science or engineering after January 1, 1985, or will have earned the degree not later than June 7, 1988; (2) are United States citizens; (3) have obtained commitments from a State agricultural experiment station, college, university, other research institution or organization, Federal agency, private organization or corporation for the conduct of research; (4) have made prior arrangements for research with a scientific advisor at the institution where the research will be conducted; and (5) have interests in research that fall within the program areas described in this solicitation, to apply for a grant. While such individuals specifically are encouraged to submit proposals for competitive grants, it must be noted that no preference is given to such individuals in determining the grant awards. All individuals and eligible entities, whether or not they meet the above criteria, are welcomed to submit proposals and their proposals will be evaluated objectively under the applicable award criteria. Interested potential applicants should contact the appropriate program staff for further information.

This program is divided into the two program areas outlined below and funding will be divided equally between them. Proposals submitted in response to this solicitation must be identified as to the program area under which they are to be considered for funding (i.e., Improved Utilization of Wood and Wood Fiber, or Forest Biology).

Wood Utilization. The Department will fund proposals concerning the improved utilization of wood and wood fiber. Public and private forests in the United States contain one of our most important renewable natural resources, providing a continuing supply of wood for industrial material, chemicals, and energy, as well as other resources and benefits. National requirements for wood, wood fiber, and chemical products, however, increasingly demand the development of innovative and economical conversion processes that effectively utilize total available wood resources. Thus, as the diverse demands placed upon forest resources grow, the Department of Agriculture is encouraging basic research leading to improved wood and wood product utilization and development of more efficient harvesting, processing and management practices as they affect wood utilization.

Forest Biology. The Department will fund proposals concerning forest biology (including biotechnology). Forest systems generally are dominated by long-lived trees in either planted or naturally regenerated stands that may vary in composition from one species to complex mixtures of many. These primarily undomesticated populations of forest trees, while dominant, are but one component of larger communities of diverse numbers and combinations of associated organisms. Productivity of the forest ecosystem is thus dependent upon the many complex processes and

interactions among trees, other organisms and the physical factors of the environment. While many of these processes and interactions have been identified, studied and described, very little is known about underlying basic biological mechanisms.

The following guidelines are provided as a base from which proposals may be developed.

Specific Areas of Research To Be Supported in Fiscal Year 1988

1.0 Improved Utilization of Wood and Wood Fiber

Improved wood utilization practices depend upon a continually advancing scientific foundation of basic research in wood properties and fundamental components of wood science. This program area encourages research that addresses critical barriers to improved wood utilization and harvesting and that will provide the scientific base from which new research and development can proceed. This research area will place emphasis on the following subprogram areas:

Wood Chemistry and Biochemistry represents an important area where new basic information is vitally needed and where breakthroughs have a virtually unlimited potential for expanding wood utilization. Basic questions that need to be addressed include principles governing chemical reactions in wood and wood products. These reactions may be of biological, physical or chemical origin. Examples of research subjects of interest include bioconversion and deterioration mechanisms, lignin and cellulose polymer modification, surface chemistry, modification and improvement in adhesive systems, bonding chemistry, and thermal reactions.

Physical/Mechanical Properties of Wood and Basic Wood Processing Technology constitutes an area of investigation in which an improved base of scientific knowledge can ensure future development of new products and processes. Research is encouraged that furthers our understanding of basic mechanisms that impinge upon the structure, physical properties, and basic processing characteristics of wood and reconstituted wood materials. Examples of such research include, but are not limited to, anatomy, wood formation, viscoelasticity, machining processes, heat and mass transfer phenomena, lignocellulose modification, particle/fiber consolidation, surface and defect evaluation methods, non-destructive property evaluation, and materials science principles.

Structural Wood Engineering has developed empirically over time and has typically involved incremental improvements upon conventional concepts. Significant improvements will depend on the development of an expanded scientific base of knowledge about the use and performance of wood as a structural material. The goal of basic research in this field is to support and encourage innovative approaches to the structural use of wood. Examples of research in this subprogram area include reliability-based design, systems modeling and validation, wood/non-wood composites, fasteners and connectors, moisture and environmental effects, and basic failure mechanisms.

Harvesting and Forest Engineering research that emphasizes impact of harvesting upon forest productivity, quality and quantity of biomass harvested or on other aspects of wood utilization will also be considered in this program. Examples of such research include studies of engineering-system-related stand regeneration, tree growth, wood quality or log defect. Proposals integrating harvesting and wood utilization are particularly encouraged. Research which is primarily directed toward developing economics of alternative harvesting and engineering systems, processes or materials or research dealing with managerial problems is *not* considered to be within the scope of this program. Likewise, research on the development of equipment, instrumentation and control systems is not included unless a significant portion of such work involves effects of equipment or instrumentation on wood or wood products.

If necessary, further information concerning this area of research may be obtained from the Associate Program Manager for Improved Utilization of Wood and Wood Fiber at (202) 475-3310.

2.0 Forest Biology (including Biotechnology)

The primary goals of the Forest Biology program area are to promote and fund research that will further the basic knowledge of mechanisms of biological processes in forest organisms and systems and that will contribute to the health and productivity of the forest resource. Emphasis will be placed on research proposals that deal with the woody plant component of the forest system. This program area will support research in the following subprogram areas:

Genetic Structure and Function is an area of research in which new basic knowledge and technology development are critically needed to support future efforts in more intensive forest management. Forest organisms, by virtue of their wide distribution and occurrence in both natural and manipulated ecosystems, offer unique opportunities to analyze, identify and utilize a broad spectrum of variations and adaptations that still persist in the gene pools of existing populations.

Research should address the genetic limits to the health and productivity of woody species, including: Development of techniques for genetic engineering, including those for DNA transfer systems and for determining molecular mechanisms of gene expression; elucidation of mechanisms of morphogenesis at the cellular and organismal levels, including those controlling the development of productive plants from tissue or cell culture; identification and characterization of valuable genes and simply-inherited traits; and determinations of the organization, structure, and function of genes.

Mechanisms of Interactions in Forest Systems is an area of research which requires a significant increase in basic knowledge to support subsequent studies of a more applied nature. Forest productivity is determined by complex climatic, geochemical and physical forces interacting with the living component of the ecosystem, the diverse mixtures of woody species of varying genotype, size and age that exist in various stages of equilibria with each other and with a host of other forest organisms. Understanding basic mechanisms that underlie the dynamic changes that occur as a forest regenerates and matures is essential to determining constraints and opportunities to improve the health and productivity of the forest resource.

Area in which basic research is needed to understand mechanisms involved in some of those processes include, but are not limited to: Determining mechanisms driving processes such as mycorrhizal symbioses, carbon and nitrogen metabolism, and elucidating mechanisms involved in antagonistic relationships between forest organisms (interspecific interference) such as allelopathy and host-parasite interactions.

If necessary, further information concerning this area of research may be obtained from the Associate Program Manager for Forest Biology at (202) 475-3310.

How To Obtain Application Materials

Please note that potential applicants who submitted an application to this program in fiscal year 1987, or who

requested placement on the mailing list for fiscal year 1988, will automatically receive copies of this solicitation, the Grant Application Kit, and the Administrative Provisions governing this program, 7 CFR Part 3201 (51 FR 15288, April 22, 1986). All others may request copies from: Proposal Services Unit, Grants Administrative Management, Office of Grants and Program Systems, Cooperative State Research Service, U.S. Department of Agriculture, Room 005, J.S. Morrill Building, 15th and Independence Avenue SW., Washington, DC 20251-2200; telephone number (202) 475-5048.

What To Submit

An original and 14 copies of each proposal submitted under this program are requested. This number of copies is necessary to permit thorough, objective peer evaluation of all proposals received before funding decisions are made. Renewal proposals should include a clearly identified progress report and any reprints or preprints of publications resulting from the funded research. Resubmissions of unsuccessful proposals should clearly indicate what changes have been made in the proposal. Each copy of each proposal must include a Form CSRS-661, "Grant Application," which is included in the Grant Application Kit. Proposers should note that one copy of this form, preferably the original, must contain pen-and-ink signatures of the principal investigator(s) and the authorized organizational representative.

Each project description is expected by the members of review panels and the CSRS staff to be complete in itself. It should be noted that reviewers are not required to read beyond 15 pages of the project description to evaluate the proposal. Vitae of key project personnel should be limited to three (3) or four (4) pages each.

All copies of a proposal must be mailed in one package because applications submitted in several packages are difficult to identify. Please see that each copy of each proposal is stapled securely in the upper left-hand corner. DO NOT BIND. Information should be typed on *one side of the page only.*

Every effort should be made to ensure that the proposal contains all pertinent information when initially submitted. Prior to mailing, compare your proposal with the instructions found in 7 CFR Part 3201.

Applicants must not submit the same research proposal in the same fiscal year to different research program areas within the Competitive Research Grants Program. Duplicate proposals or essentially duplicate proposals, as well as predominantly overlapping proposals, will be returned without review.

Submission of more than one proposal to the Competitive Research Grants Office from the same principal investigator in the same fiscal year is discouraged.

Excessive numbers of co-principal investigators and collaborators create conflict-of-interest problems during the review and award processes. Proposals with multiple co-principal investigators and collaborators beyond those required for genuine multi-disciplinary studies are strongly discouraged.

Where and When To Submit Grant Applications

Each research grant application must be submitted to: Proposal Services Unit, Grants Administrative Management, Office of Grants and Program Systems, Cooperative State Research Service, U.S. Department of Agriculture; Room 005, J.S. Morrill Building, 15th and Independence Avenue SW., Washington, DC 20251-2200.

To be considered for funding during fiscal year 1988, *proposals must be postmarked by April 25, 1988.*

Supplementary Information: The program for Competitive Research Grants for Forest and Rangeland Renewable Resources is listed in the Catalog of Federal Domestic Assistance under No. 10.213. For reasons set forth in the final rule-related notice to 7 CFR Part 3015, Subpart V (48 FR 29115, June 24, 1983), this program is excluded from the scope of Executive Order 12372, which requires intergovernmental consultation with State and local officials.

Under the provisions of the Paperwork Reduction Act of 1980 (44 U.S.C. 3504(h)), the collection of information requirements contained in this notice has been approved under OMB Document No. 0524-0022.

Done at Washington, DC, this 22d day of February 1988.

John Patrick Jordan,

Administrator, Cooperative State Research Service.

[FR Doc. 88-4115 Filed 2-25-88; 8:45 am]

BILLING CODE 3410-22-M

Federal Register

Friday
February 26, 1988

Part VII

Department of Labor

Office of the Secretary

29 CFR Part 96

Public Contracts and Property Management; Federal Standards for Audit of Federally Funded Grants, Contracts and Agreements; Final Rule

DEPARTMENT OF LABOR

Office of the Secretary

29 CFR Part 96

Public Contracts and Property Management; Federal Standards for Audit of Federally Funded Grants, Contracts, and Agreements

AGENCY: Office of the Secretary, Labor.

ACTION: Final rule.

SUMMARY: The Department of Labor (DOL) is amending its administrative requirements for audit by adding sections on audit resolution and audit appeals. DOL is taking this action to establish standard approaches in these areas for all DOL agencies. This is a part of a larger effort to review common administrative issues with the objective of streamlining and standardizing procedures.

EFFECTIVE DATE: The final rule is effective on March 28, 1988.

FOR FURTHER INFORMATION CONTACT: Mr. Theodore Goldberg. Telephone: (202) 523-8904.

SUPPLEMENTARY INFORMATION:

I. Background
II. Public Comments
III. Statutory and Regulatory Requirements
A. Executive Order 12291
B. Regulatory Flexibility Act
C. Paperwork Reduction Act

I. Background

On August 8, 1985, the Department of Labor's (DOL's) interim final audit regulations were published in the **Federal Register**. 50 FR 32050. Those rules, published at 29 CFR Part 96, implemented the Single Audit Act of 1984 (SAA) and Office of Management and Budget (OMB) Circular A-128. In addition, other audit requirements for hospitals, universities, and non-profit organizations were consolidated.

On June 27, 1986, a notice of proposed rulemaking was published in the **Federal Register** asking for comments on proposed regulations on audit resolution and audit appeal in DOL programs, 51 FR 23433. Interested parties were invited to submit comments by August 26, 1986. DOL is taking this action to add rules on audit resolution and appeal to establish standard approaches in these areas for all DOL agencies. This is a part of a larger effort to review common administrative issues with the objective of streamlining and standardizing procedures. DOL agencies will be permitted to establish different procedures by regulation, and existing procedures established by regulation (or statute) would apply rather than the regulations promulagted in this document.

II. Public Comments

Five commenters submitted comments. All comments were considered in developing these final requirements.

There follows a summary of the major comments, grouped by subject, and a response to each, including a description of changes made as a result of the comments. Other changes have been made to increase clarity and readability.

Pre-resolution Phase Activities

Comment: One commenter expressed concern regarding the ability to comply with the requirement that copies of the audit report with corrective action plans (CAPs), if necessary, shall be submitted within thirty (30) days of completion of the audit, but no later than one year after the end of the period covered by the audit, to the DOL Office of the Inspector General.

Reply: This requirement was changed to be consistent with the policy directives of OMB Circular A-128. As stated in OMB's issuance entitled *Questions and Answers on the Single Audit Process of OMB Circular A-128 "Single Audits of State and Local Governments,"* 52 FR 43712, November 13, 1987, "A single audit report is due 13 months following the end of the entities' fiscal year. The 12 months are for the preparation of the audit report. The 13th month is for audit transmittal."

Comment: One commenter expressed concern that the instructions on submitting audit reports to DOL was overly broad by appearing to include subrecipients. Audits of subrecipients are the responsibility of the prime recipient. Additionally, the broad language implied that the Office of Inspector General would be responsible for a full desk review against single audit and professional standards where DOL was not the cognizant agency.

Reply: DOL agrees that its language was overly broad and non-specific and § 96.502 is so adjusted.

Audit Resolution Generally

Comment: One commenter suggested that set timeframes be established for all of the steps in the 180-day resolution process.

Reply: DOL considered this option, but is not adopting any set timeframes within the full cycle. Audit resolution is complicated by the varying degress of complexity faced by DOL. To establish set timeframes for the initial determination, informal resolution, etc., will limit the flexibility needed to address different issues. DOL, however, will work to allow the recipient organizations ample time to respond to all issues at hand.

Responsibility for Subrecipient Audits

Comment: One commenter said that the responsibility threshold for subrecipient audits should be clearly identified as $25,000 or over as stated in the SAA and OMB Circular A-128.

Reply: DOL agrees that this identification of the audit threshold is appropriate. Section 96.504 is so adjusted.

Comment: One commenter noted that DOL omitted one of the State or local government responsibilities vis-a-vis subrecipients that is listed in OMB Circular A-128.

Reply: This requirement of the State and local governments was inadvertantly left out of the proposed rule. This final rule includes the requirement that the State and local governments consider whether subrecipient audits necessitate adjustment of the recipient's own records.

Audit Appeals—Grants

Comment: Two commenters addressed the 21-day timeframe offered by DOL to submit an appeal after receipt of a final audit determination from DOL. One felt that this was more than currently offered, and approved of this standard. The other did not think that the 21 days were adequate to complete the administrative review process.

Reply: The 21-day timeframe is reasonable for the submittal of an appeal. This final rule adopts that standard.

Comment: One commenter objected to the availability of two different options of appeal of a final determination based on a grant audit. As outlined in the proposed rule the grantor agency would select the method of appeal for its various grant programs if not already established in law. It was suggested that if two options are offered that the grantee be able to select which option to follow. If this approach was not adopted then the commenter felt that the administrative law judge option should be made the rule for DOL, and that the second option be dropped.

Reply: DOL holds that the availability of two options is appropriate due to the great diversity of DOL'S different grant programs. The option decision is not made on a case-by-case basis, but rather will be for a full grant program. Additionally, the decision on which appeal method to use is a responsibility

of the grantor agency. The final rule reflects these positions.

Other minor techical and clarifying changes have been made in the final rule.

III. Statutory and Regulatory Requirements

A. Executive Order 12291

This final rule is not a "major rule" under Executive Order 12291, because it will not likely result in (1) an annual effect on the economy of $100 million or more; (2) A major increase in costs or prices for consumers, individual industries, Federal, State, or local government agencies, or geographic regions; or (3) have significant adverse effects on competition, employment, investment, productivity, innovation, or on the ability of United States-based enterprises to compete with foreign-based enterprises in domestic or export markets. Accordingly, no regulatory impact analysis is required.

B. Regulatory Flexibility Act

This final rule has been reviewed with regard to the requirements of the Regulatory Flexibility Act. At the time the proposed rule was published, DOL notified and certified to the Chief Counsel for Advocacy, Small Business Administration, pursuant to 5 U.S.C. 605(b), that the rule would not have a significant economic impact on a substantial number of small entities.

C. Paperwork Reduction Act

In accordance with the Paperwork Reduction Act of 1980 (Pub. L. 96-511), the reporting and recordkeeping provisions included in this rule have been approved by OMB.

List of Subjects in 29 CFR Part 96

Government procurement, Grant programs—Labor, Government contracts, Reporting and recordkeeping requirements.

Final Rule

Accordingly, for the reasons set out in the preamble, Part 96 of Subtitle A of Title 29 of the Code of Federal Regulations is amended as set forth below.

Signed at Washington DC, this 22nd day of February, 1988.

Ann McLaughlin,

Secretary of Labor.

PART 96—AUDIT REQUIREMENTS FOR GRANTS, CONTRACTS AND OTHER AGREEMENTS

1. The authority citation for Part 96 continues to read as follows:

Authority: 31 U.S.C. 7500 *et seq.*; OMB Circular No. A-128 and OMB Circular No. A-110.

2. Part 96 of Title 29 is amended by revising Subparts 96.5 and 96.6 to read as follows:

Subpart 96.5—Audit Resolution

Sec.

96.501 Purpose and scope of subpart.
96.502 Pre-resolution phase activities.
96.503 Audit resolution generally.
96.504 Responsibility for subrecipient audits.

§ 96.501 Purpose and scope of subpart.

This subpart prescribes standards for resolution of audit findings, including, but not limited to, questioned costs and administrative deficiencies, identified as a result of the audit of grants, contracts and other agreements awarded by or on behalf of the DOL. In cases where these standards conflict with statutes or other DOL regulations, the latter shall be controlling. The DOL Office of Inspector General (OIG) is available to assist agencies in the audit resolution process.

§ 96.502 Pre-resolution phase activities.

(a) *Processing.* Direct recipients of DOL funds that are audited in accordance with the requirements of Subpart 96.1 or Subpart 96.2 shall submit copies of the audit report through the cognizant Federal agency if other than DOL with corrective action plans (CAPs), if necessary, within thirteen (13) months following the end of the recipient's fiscal year, to the DOL (OIG). Direct recipients not assigned a cognizant Federal agency shall normally submit the audit report through the Federal agency that provides the most direct Federal funds. Those reports meeting the requirements of a single audit as prescribed by Subpart 96.1 or Subpart 96.2 shall be forwarded by the DOL OIG for resolution to the appropriate DOL program official(s). The Program official(s) shall promptly evaluate the findings and recommendations in the report along with any OIG comments and determine appropriate action.

(b) *Inadequate reports.* Where DOL is cognizant, OIG will review reports to determine if they meet the requirements of Subparts 96.1 or 96.2. Where reports are found not to meet applicable requirements, OIG will provide written notice to the recipient. Such written notice will include an explanation of why the report is inadequate, actions required to correct the inadequacies, timeframes for correcting the inadequacies, and consequences of the failure to take corrective action.

§ 96.503 Audit resolution generally.

The DOL official(s) responsible for audit resolution shall promptly evaluate findings and recommendations reported by auditors and the CAP developed by the recipient to determine proper actions in response to audit findings and recommendations. The process of audit resolution minimally includes an initial determination, an informal resolution period and a final determination.

(a) *Initial determination.* After the conclusion of any comment period for audits provided the grantee/contractor, the responsible DOL official(s) shall make an initial determination on the allowability of questioned costs or activities, administrative or systemic findings, and the corrective actions outlined by the recipient. Such determination shall be based on applicable statutes, regulations, administrative directives, or grant/contract conditions.

(b) *Informal resolution.* The grantee/contractor shall have a reasonable period of time (as determined by the DOL official(s) responsible for audit resolution) from the date of issuance of the initial determination to informally resolve those matters in which the grantee/contractor disagrees with the decisions of the responsible DOL official(s).

(c) *Final determination.* After the conclusion of the informal resolution period, the responsible DOL official(s) shall issue a final determination that:

(1) As appropriate, indicate that efforts to informally resolve matters contained in the initial determination have either been successful or unsuccessful;

(2) Lists those matters upon which the parties continue to disagree;

(3) Lists any modifications to the factual findings and conclusions set forth in the initial determination;

(4) Lists any sanctions and required corrective actions; and

(5) Sets forth any appeal rights.

(d) *Time limit.* Insofar as possible, the requirements of this section should be met within 180 days of the date the final approved audit report is received by the DOL official(s) responsible for audit resolution.

§ 96.504 Responsibility for subrecipient audits.

Recipients of Federal assistance from DOL are responsible for ensuring that subrecipient organizations to whom they provide $25,000 or more in a fiscal year are audited and that any audit findings are resolved in accordance with this part. The recipient shall:

(a) Determine whether appropriate audit requirements outlined in Subpart 96.1 or Subpart 96.2 have been met;

(b) Determine whether the subrecipient spent Federal assistance funds provided in accordance with applicable laws and regulations;

(c) Ensure that appropriate corrective action is taken within six months after receipt of the audit report in instances of non-compliance with Federal law and regulations;

(d) Consider whether subrecipient audits necessitate adjustment of the recipient's own records; and

(e) Require that each subrecipient permit independent auditors to have access to the records and financial statements necessary to comply with this part.

Subpart 96.6—Appeals

Sec.

96.601 Purpose and scope of subpart.
96.602 Contracts.
96.603 Grants.

§ 96.601 Purpose and scope of subpart.

(a) The purpose of this subpart is to set forth procedures by which grantees and contractors may appeal final determinations by DOL officials responsible for audit resolution as a result of audits, where such appeal rights and procedures are not established elsewhere in regulations and statutes administered by DOL or its subagencies. This subpart shall not apply where such appeal rights and procedures are so specified elsewhere.

(b) Subgrantees and subcontractors shall have only such appeal rights as may exist in subgrants or subcontracts with the respective grantees or contractors.

(c) For the purpose of this subpart, the term "grant" shall include all agreements for Federal assistance from DOL which are not contracts as defined in the Contract Disputes Act.

§ 96.602 Contracts.

Upon a contractor's receipt of the DOL contracting officer's final determination as a result of an audit, the contractor may appeal the final determination to the DOL Board of Contract Appeals, pursuant to 41 CFR Part 29–60 and 48 CFR Part 2933 or pursue such other remedies as may be available under the Contract Disputes Act.

§ 96.603 Grants.

The DOL grantor agencies shall determine which of the two appeal options set forth in paragraphs (a) and (b) of this section the grantee may use to appeal the final determination of the grant officer. All grants within the same grant program shall follow the same appeal procedure.

(a) *Appeal to the head of the grantor agency, or his/her designee, for which the audit was conducted.*—(1) *Jurisdiction.*—(i) *Request for hearing.* Within 21 days of receipt of the grant officer's final determination, the grantee may transmit, by certified mail, return receipt requested, a request for hearing to the head of the grantor agency, or his/her designee, as noted in the final determination. A copy must also be sent to the grant officer who signed the final determination.

(ii) *Statement of issues.* The request for a hearing shall be accompanied by a copy of the final determination, if issued, and shall specifically state those portions of the final determination upon which review is requested. Those portions of the final determination not specified for review shall be considered resolved and not subject to further review.

(iii) *Failure to request review.* When no timely request for a hearing is made, the final determination shall constitute final action by the Secretary of Labor and shall not be subject to further review.

(2) *Conduct of hearings.* The grantor agency shall establish procedures for the conduct of hearings by the head of the grantor agency, or his/her designee.

(3) *Decision of the head of the grantor agency, or his/her designee.* The head of the grantor agency, or his/her designee, should render a written decision no later than 90 days after the closing of the record. This decision constitutes final action of the Secretary of Labor.

(b) *Appeal to the DOL Office of Administrative Law Judges*—(1) *Jurisdiction*—(i) *Request for hearing.* Within 21 days of receipt of the grant officer's final determination, the grantee may transmit by certified mail, return receipt requested, a request for hearing to the Chief Administrative Law Judge, United States Department of Labor, Suite 700, Vanguard Building, 1111 20th Street NW., Washington, DC 20036, with a copy to the grant officer who signed the final determination. The Chief Administrative Law Judge shall designate an administrative law judge to hear the appeal.

(ii) *Statement of issues.* The request for a hearing shall be accompanied by a copy of the final determination, if issued, and shall specifically state those portions of the final determination upon which review is requested. Those portions of the final determination not specified for review shall be considered resolved and not subject to further review.

(iii) *Failure to request review.* When no timely request for a hearing is made, the final determination shall constitute final action by the Secretary of Labor and shall not be subject to further review.

(2) *Conduct of hearings.* The DOL *Rules of Practice and Procedure for Administrative Hearings Before the Office of Administrative Law Judges*, set forth at 29 CFR Part 18, shall govern the conduct of hearings under paragraph (b).

(3) *Decision of the administrative law judge.* The administrative law judge should render a written decision no later than 90 days after the closing of the record.

(4) *Filing exceptions to decision.* The decision of the administrative law judge shall constitute final action by the Secretary of Labor, unless, within 21 days after receipt of the decision of the administrative law judge, a party dissatisfied with the decision or any part thereof has filed exceptions with the Secretary of Labor, specifically identifying the procedure or finding of fact, law, or policy with which exception is taken. Any exceptions not specifically urged shall be deemed to have been waived. Thereafter, the decision of the administrative law judge shall become the decision of the Secretary of Labor, unless the Secretary of Labor, within 30 days of such filing, has notified the parties that the case has been accepted for review.

(5) *Review by the Secretary of Labor.* Any case accepted for review by the Secretary of Labor shall be decided within 180 days of such acceptance. If not so decided, the decision of the administrative law judge shall become the final decision of the Secretary of Labor.

[FR Doc. 88–4159 Filed 2–25–88; 8:45 am]

BILLING CODE 4510-23-M

Reader Aids

Federal Register

Vol. 53. No. 38

Friday, February 26, 1988

INFORMATION AND ASSISTANCE

Federal Register

Index, finding aids & general information	**523-5227**
Public inspection desk	**523-5215**
Corrections to published documents	**523-5237**
Document drafting information	**523-5237**
Machine readable documents	**523-5237**

Code of Federal Regulations

Index, finding aids & general information	**523-5227**
Printing schedules	**523-3419**

Laws

Public Laws Update Service (numbers, dates, etc.)	**523-6641**
Additional information	**523-5230**

Presidential Documents

Executive orders and proclamations	**523-5230**
Public Papers of the Presidents	**523-5230**
Weekly Compilation of Presidential Documents	**523-5230**

The United States Government Manual

General information	**523-5230**

Other Services

Data base and machine readable specifications	**523-3408**
Guide to Record Retention Requirements	**523-3187**
Legal staff	**523-4534**
Library	**523-5240**
Privacy Act Compilation	**523-3187**
Public Laws Update Service (PLUS)	**523-6641**
TDD for the deaf	**523-5229**

FEDERAL REGISTER PAGES AND DATES, FEBRUARY

2719-2816 1
2817-2994 2
2995-3182 3
3183-3324 4
3325-3570 5
3571-3720 8
3721-3844 9
3845-3996 10
3997-4104 11
4105-4372 12
4373-4588 16
4589-4826 17
4827-4952 18
4953-5148 19
5149-5268 22
5269-5356 23
5357-5566 24
5567-5748 25
5749-5968 26

CFR PARTS AFFECTED DURING FEBRUARY

At the end of each month, the Office of the Federal Register publishes separately a List of CFR Sections Affected (LSA), which lists parts and sections affected by documents published since the revision date of each title.

3 CFR

Proclamations:
5763 2719
5764 2814
5765 3183
5766 3185
5767 3327
5768 3573
5769 3575
5770 4105
5771 4373
5772 4375
5773 4953

Executive Orders:
12301 (Revoked by EO 12625) 2812
12625 2812

Administrative Orders:
Memorandums:
Jan. 27, 1988 3571
Jan. 28, 1988 2816
Presidential Determinations:
No. 88-5 of Jan. 15, 1988 3325
No. 88-7 of Jan.19, 1988 3845
No. 88-8 of Jan. 29, 1988 3847
No. 88-9 of Feb. 9, 1988 5749

5 CFR

Proposed Rules:
531 4986
950 4631

7 CFR

12 3997
68 3721
210 4377
225 4827
247 4831
272 2817
301 ..... 3849, 3850, 3999, 4841
401 ..... 4006, 4379, 4589
422 4380
656 4006
713 3856
907 ..... 3329, 4107, 4955, 5751
910 ..... 3330, 4108, 4956, 5752
932 2823
945 3187
947 2995
948 4498
966 3189
979 ..... 4956, 4957
989 4958
1097 3734
1106 5149
1136 4589
1139 4589
1260 5752
1403 3330
1901 3860
1942 3861
1951 ..... 3860, 5357
2902 4007
2903 4007
3800 5357
3801 5357
4000 4108
4001 4108

Proposed Rules:
52 ..... 3403, 3490
53 3025
54 3025
58 4639
250 2846
253 5583
300 3896
318 3028
400 4986
401 ..... 4413, 5276, 5277
440 4413
456 4030
652 4989
907 ..... 2849, 3599
908 ..... 2849, 3599
916 5776
917 ..... 2851, 5776
925 2851
927 4641
929 3036
948 3037
1032 5777
1050 5386
1421 2759
1823 2852
1900 4414
1930 2852
1933 2852
1942 2852
1944 2852
1948 2852
1980 ..... 2852, 4414
2054 3176

8 CFR

204 2824
214 3331
286 5756

Proposed Rules:
212 3403

9 CFR

78 4381
92 ..... 2824, 4842
94 5758
97 4382
319 5150
362 3735

Proposed Rules:
50 ... 4179
51 ... 2759, 4179
71 ... 3146
77 ... 4179
78 ... 3146, 4179
85 ... 3146
92 ... 4179
309 ... 3146
310 ... 3146
320 ... 3146
350 ... 5387
352 ... 5387

10 CFR
1 ... 3861
20 ... 3861
30 ... 3861, 4109
40 ... 3861, 4109
55 ... 3861
60 ... 4109
61 ... 4109
70 ... 3861, 4109
71 ... 4109
72 ... 4109
73 ... 3861, 4109
74 ... 4109
110 ... 4109
600 ... 5260
Proposed Rules:
2 ... 3404
31 ... 2853

11 CFR
Proposed Rules:
102 ... 5277
106 ... 5277

12 CFR
18 ... 3863
32 ... 2997
207 ... 2998
211 ... 5358
220 ... 2998
221 ... 2998
224 ... 2998
226 ... 3332
265 ... 5151
614 ... 2825, 3191
620 ... 3334, 3335
621 ... 3335
701 ... 4843, 4844
703 ... 4843
748 ... 4844
795 ... 3000
Proposed Rules:
308 ... 5392
611 ... 4416
614 ... 4417
615 ... 4642
701 ... 4992
761 ... 4856
790 ... 4996
791 ... 4996

13 CFR
125 ... 4008
140 ... 4112

14 CFR
21 ... 2721-2733, 3534, 4098
23 ... 2721-2733
36 ... 3534
39 ... 2735-2737, 3001, 3002, 3577-3581, 3736-3738, 3807, 4114, 4115, 4383, 4604, 4605, 5152-5154, 5363-5366, 5759-5763
47 ... 3808
49 ... 3808
71 ... 3005-3008, 3581-3714, 3842, 4117-4119, 5155, 5521
73 ... 3010, 4845
91 ... 3810, 4846
97 ... 3011, 3012, 4846
139 ... 4119, 4258
1206 ... 2738, 5764
1207 ... 4606, 5764
Proposed Rules:
21 ... 2761, 3040, 3042
23 ... 2761
25 ... 3040, 3042, 4314
29 ... 4314
39 ... 2763-2765, 3044-3048, 3600-3604, 3753, 4418, 4419, 5080, 5189, 5192, 5428, 5801
71 ... 3049, 3528, 4179, 4306
91 ... 3606, 4306, 4314
121 ... 4314
125 ... 4314
135 ... 3606, 4314
316 ... 4180

15 CFR
Ch. III ... 3014
399 ... 3490
Proposed Rules:
806 ... 4420

16 CFR
13 ... 4009
1015 ... 3867
1500 ... 3014
Proposed Rules:
13 ... 3214
453 ... 2767

17 CFR
1 ... 4604
30 ... 3338
145 ... 4606
147 ... 4606
230 ... 3868
239 ... 3192, 5269
240 ... 4120
270 ... 3868
274 ... 3192, 3868, 5269
Proposed Rules:
249 ... 2854

18 CFR
2 ... 3584, 3886
37 ... 3339, 3342
154 ... 3886
157 ... 3584, 4121
201 ... 3886
270 ... 3886
271 ... 3019, 3886
380 ... 3584, 4817
389 ... 3364, 5155
Proposed Rules:
Ch. I ... 3754

19 CFR
111 ... 4134
141 ... 4961
154 ... 2826
171 ... 4961
270 ... 2826
271 ... 2826
273 ... 2826
375 ... 2826
381 ... 2826
1310 ... 2826
Proposed Rules:
101 ... 2767
128 ... 4998
143 ... 1998

20 CFR
61 ... 3678
62 ... 3678
200 ... 3198
346 ... 3200
355 ... 3200
359 ... 3200
416 ... 3739, 4134
626 ... 4262
627 ... 4262
628 ... 4262
629 ... 4262
630 ... 4262
631 ... 4262

21 CFR
1 ... 2827
16 ... 4613
133 ... 3742
184 ... 4384, 5765
193 ... 5367
201 ... 4135
299 ... 5368
522 ... 4848, 5369
524 ... 4615
556 ... 5369
558 ... 4009
561 ... 5367
884 ... 5080
892 ... 5080
1301 ... 4963
1303 ... 4963
1305 ... 4963
1306 ... 4963
1308 ... 3744, 5156
1311 ... 4963
Proposed Rules:
12 ... 2767
179 ... 4856
182 ... 4184
193 ... 4643
561 ... 4643
864 ... 5080, 5108
868 ... 5080
1301 ... 3757
1308 ... 3292, 3314

22 CFR
1506 ... 5567
Proposed Rules:
706 ... 5583

23 CFR
260 ... 3744
645 ... 2829
Proposed Rules:
Ch. I ... 3757
635 ... 3897

24 CFR
42 ... 4964
43 ... 4964
200 ... 3201, 3807, 4498
201 ... 3364
203 ... 3364, 4384
232 ... 3365
234 ... 3364
235 ... 3365
247 ... 3366
882 ... 4388
886 ... 3366

26 CFR
1 ... 3118, 4965, 5568, 5686
301 ... 5269
Proposed Rules:
1 ... 3118, 4858, 4999, 5733
31 ... 4858
301 ... 4858, 5279

27 CFR
9 ... 2834, 3745
Proposed Rules:
9 ... 3214, 4999

28 CFR
0 ... 4010, 5370
42 ... 3203, 5521
Proposed Rules:
0 ... 4034
71 ... 4034

29 CFR
96 ... 5966
100 ... 4615
1601 ... 3369, 3888
1627 ... 3370
2619 ... 4135
2676 ... 4137
Proposed Rules:
70 ... 5346
1926 ... 5280

30 CFR
202 ... 4011
203 ... 4011
206 ... 4011, 4012
207 ... 4011
210 ... 4011
241 ... 4011
251 ... 4390
723 ... 3664
724 ... 3664
750 ... 3664
845 ... 3664
846 ... 3664
902 ... 5159
910 ... 3664, 4976
912 ... 3664
914 ... 4392
921 ... 3664
922 ... 3664, 4976
925 ... 5766
931 ... 4013
933 ... 3664, 4976
934 ... 2837
937 ... 3664
939 ... 3664, 4976
941 ... 3664
942 ... 3664
947 ... 3664
Proposed Rules:
702 ... 5430
750 ... 3992
917 ... 5802
925 ... 5804
936 ... 3050
943 ... 4645
946 ... 5002

31 CFR
103 ... 4137, 5080

235 ... 3584
240 ... 3584
245 ... 3584
248 ... 3584
550 ... 5571

32 CFR

199 ... 5370
884 ... 4014
Proposed Rules:
169 ... 3218
171 ... 3218
651 ... 4646

33 CFR

3 ... 5572
4 ... 3370
100 ... 4016
117 ... 3206, 4018, 4019, 4394, 5164
126 ... 3370
127 ... 3370
165 ... 4016, 4019, 4616, 5165
203 ... 2841
222 ... 4258
230 ... 3120
325 ... 3120
402 ... 4395
Proposed Rules:
100 ... 3221, 4421
110 ... 4422
117 ... 2769, 4423, 5193
165 ... 3609, 5194
334 ... 3758

34 CFR

3 ... 4619
17 ... 4619
222 ... 5552
305 ... 3524
322 ... 4619
777 ... 3020
Proposed Rules:
30 ... 5136
222 ... 5555
327 ... 4185
350 ... 3832
360 ... 3832
538 ... 5956
669 ... 2918

35 CFR

Proposed Rules:
103 ... 4424

36 CFR

7 ... 3747
222 ... 2978
Proposed Rules:
7 ... 3759

37 CFR

201 ... 3118
Proposed Rules:
150 ... 5588
201 ... 5591

38 CFR

3 ... 3206
21 ... 3207, 4396, 4848, 5769
36 ... 3207, 4977
Proposed Rules:
1 ... 4858
21 ... 2855, 4186, 5433, 5684, 5806

39 CFR

111 ... 3585, 5270
964 ... 4849
Proposed Rules:
111 ... 5282, 5593

40 CFR

22 ... 5373
52 ... 3888, 4020, 4139, 4620-4622
60 ... 2914, 3891, 4140, 5860
61 ... 3891
65 ... 4024
85 ... 3892
86 ... 3893
122 ... 4157
141 ... 5142
143 ... 5142
180 ... 3021-3023, 5374-5378
261 ... 4850, 5573
271 ... 3894, 4850
355 ... 5574
372 ... 4500
721 ... 2842, 2845
795 ... 5932
799 ... 3382, 5932
Proposed Rules:
51 ... 3698
52 ... 3052, 3698
60 ... 5082
81 ... 3760, 4858
86 ... 4044
147 ... 4859
180 ... 4860
261 ... 5195
280 ... 3818
372 ... 5004
721 ... 2857

41 CFR

101-1 ... 2738
101-40 ... 4623
Proposed Rules:
101-47 ... 4672

42 CFR

59 ... 2922
124 ... 5575
401 ... 4158
405 ... 4158
408 ... 4158
435 ... 3586, 5344
436 ... 3586
Proposed Rules:
82 ... 5595
405 ... 5008
406 ... 5008
407 ... 5008

43 CFR

2 ... 3748
11 ... 5166
29 ... 3395
35 ... 4159
4100 ... 2984
Public Land Orders:
6663 ... 3750
Proposed Rules:
3160 ... 3158, 3168

44 CFR

5 ... 2739
64 ... 2741, 3208, 4408, 5176, 5272
65 ... 5178, 5180
67 ... 2743, 5181
205 ... 3595
Proposed Rules:
61 ... 4673
67 ... 4425, 4675, 5195

45 CFR

73 ... 4409
301 ... 5246
302 ... 5246
303 ... 5246
305 ... 5246
2201 ... 3320
2202 ... 3321
Proposed Rules:
85 ... 4425
1180 ... 3405

46 CFR

503 ... 4027
550 ... 5770
580 ... 5770
Proposed Rules:
42 ... 5200
44 ... 5200
45 ... 5200
77 ... 4435
96 ... 4435
170 ... 5200
174 ... 5200
195 ... 4435

47 CFR

0 ... 4411, 5184
2 ... 3210, 4624
15 ... 3894
22 ... 3210, 4624
25 ... 4624
32 ... 4978
43 ... 4624
73 ... 3024, 4258, 5184-5187, 5344, 5576-5578, 5684
74 ... 4168
76 ... 3212, 5684
90 ... 3210, 3751
Proposed Rules:
Ch. I ... 5434
2 ... 4862
13 ... 5596
22 ... 4862, 5020, 5289
25 ... 3056
69 ... 3057
73 ... 3761-3763, 3897-3899, 4674, 5201, 5283-5289, 5597
80 ... 3058, 5596

48 CFR

1 ... 3688, 4817, 4934
22 ... 4934
32 ... 3688, 4817
50 ... 4934
52 ... 3688, 4817, 4934
53 ... 4934
204 ... 5114
205 ... 5114
206 ... 5114
219 ... 5114
226 ... 5114
232 ... 3751
235 ... 5114
252 ... 3751, 5114
525 ... 4169
553 ... 4169
701 ... 4979
702 ... 4979
733 ... 4979
750 ... 4979
2901 ... 3839
2902 ... 3839
2903 ... 3839
2905 ... 3839
2906 ... 3839
2909 ... 3839
2913 ... 3839
2914 ... 3839
2915 ... 3839
2916 ... 3839
2917 ... 3839
2919 ... 3839
2933 ... 3839
2943 ... 3839
2949 ... 3839
5706 ... 5578
Proposed Rules:
1 ... 5928
3 ... 4437
5 ... 5928
14 ... 3814
15 ... 3814
17 ... 3814
19 ... 5928
22 ... 5928
37 ... 3814
52 ... 3814, 5928
223 ... 3764
225 ... 4044
242 ... 3764
252 ... 3764, 4044
807 ... 5201
852 ... 5201
1246 ... 3222
5215 ... 3225
5252 ... 3225

49 CFR

92 ... 4170
571 ... 5579
701 ... 5581
1003 ... 4851
1011 ... 3400, 4851
1150 ... 4625
1152 ... 3400
1181 ... 4851
1186 ... 4851
1206 ... 4028
1249 ... 4028
1312 ... 5379
1313 ... 5379
Proposed Rules:
89 ... 4180
171 ... 4348
173 ... 4348, 4862
571 ... 5598
1039 ... 3900
1041 ... 3058
1048 ... 3058
1049 ... 3058
1056 ... 4863
1201 ... 5807
1312 ... 5022

50 CFR

14 ... 3894
17 ... 3560-3567, 4626
301 ... 3213
611 ... 3401
642 ... 3401
651 ... 5773
652 ... 4630

657 4982
675 4178
Proposed Rules:
13 4437
17...3901, 5022, 5434, 5598, 5736, 5740
21 4437
641 5809
661 3225
663 3225

LIST OF PUBLIC LAWS

Note: No public bills which have become law were received by the Office of the Federal Register for inclusion in today's **List of Public Laws.**

Last List February 22, 1988